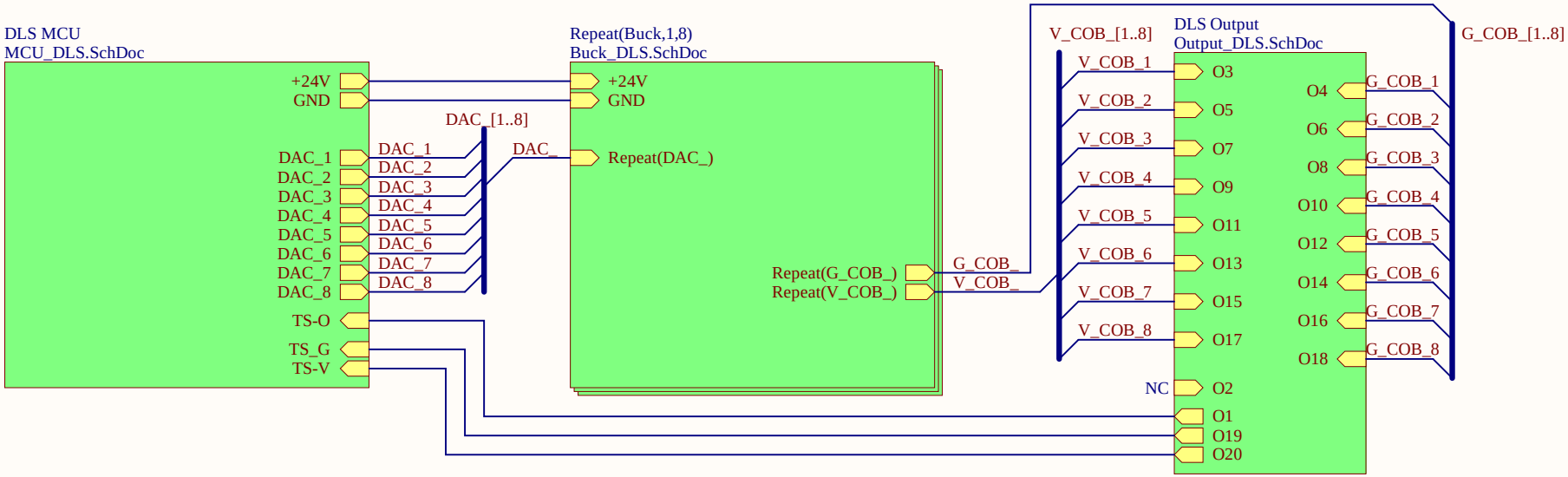

Title		
Size: Letter	Number	Revision
Date: 8/19/2025		Sheet of
File: C:\Users\..\Main_DLS.SchDoc		Drawn By:

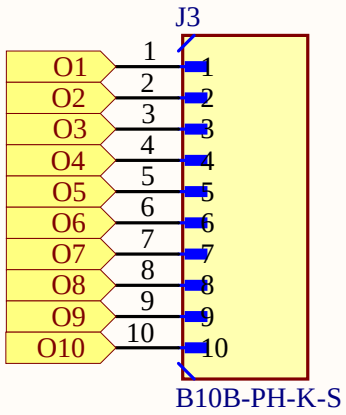

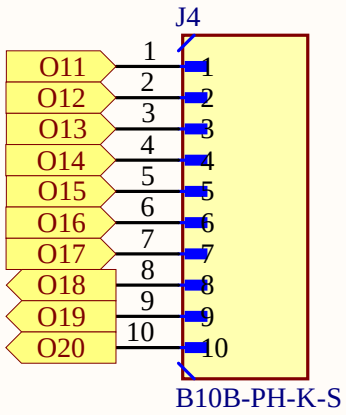

Title		
Size A4	Number	Revision
Date: 8/19/2025		Sheet of
File: C:\Users\..\Output_DLS.SchDoc		Drawn By:

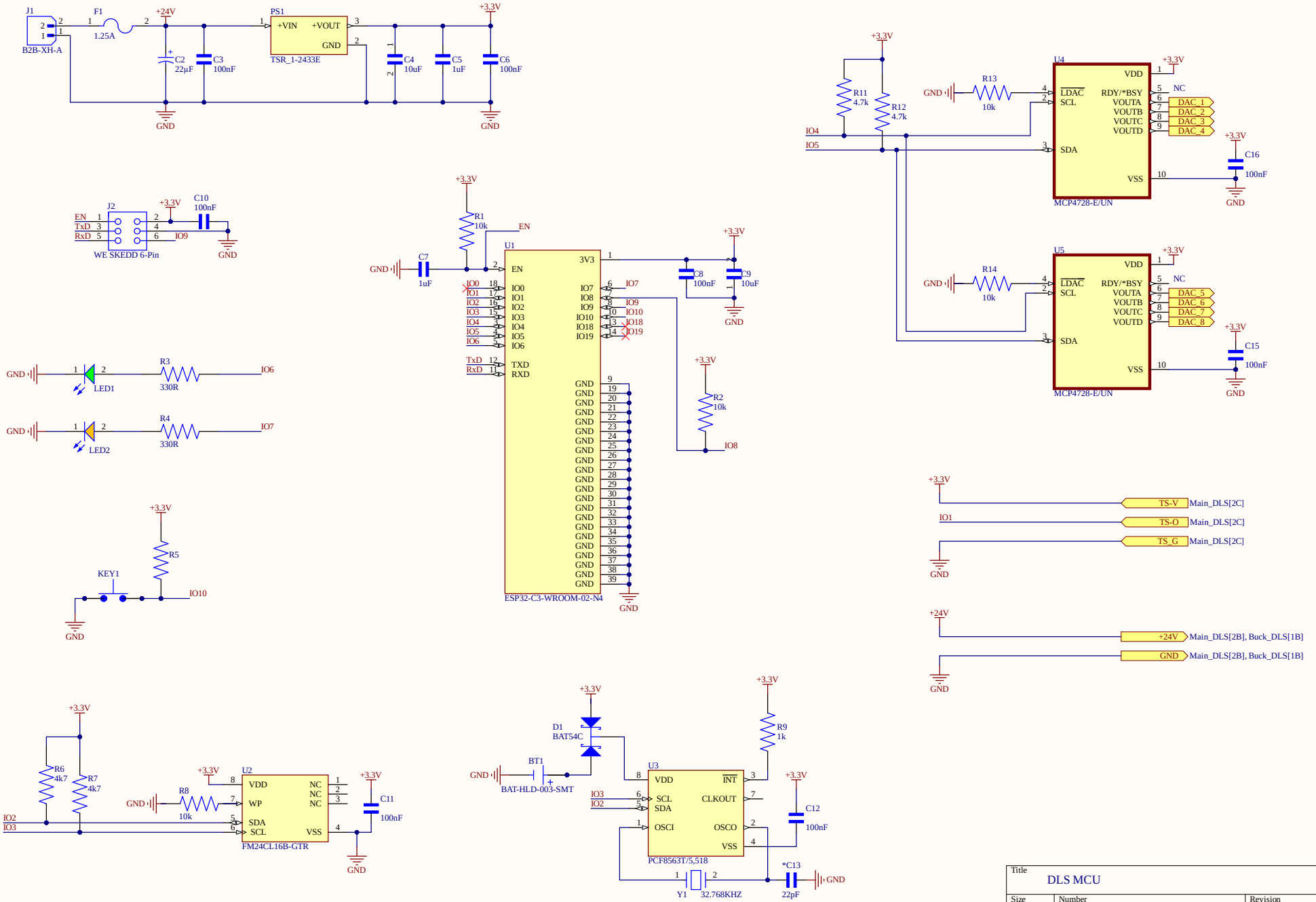

Title	DLS MCU	
Size: A3	Number	Revision: 1.0
Date: 8/19/2025		Sheet of
File: C:\Users\..\MCU_DLS.SchDoc		Drawn By: Artur Bereit

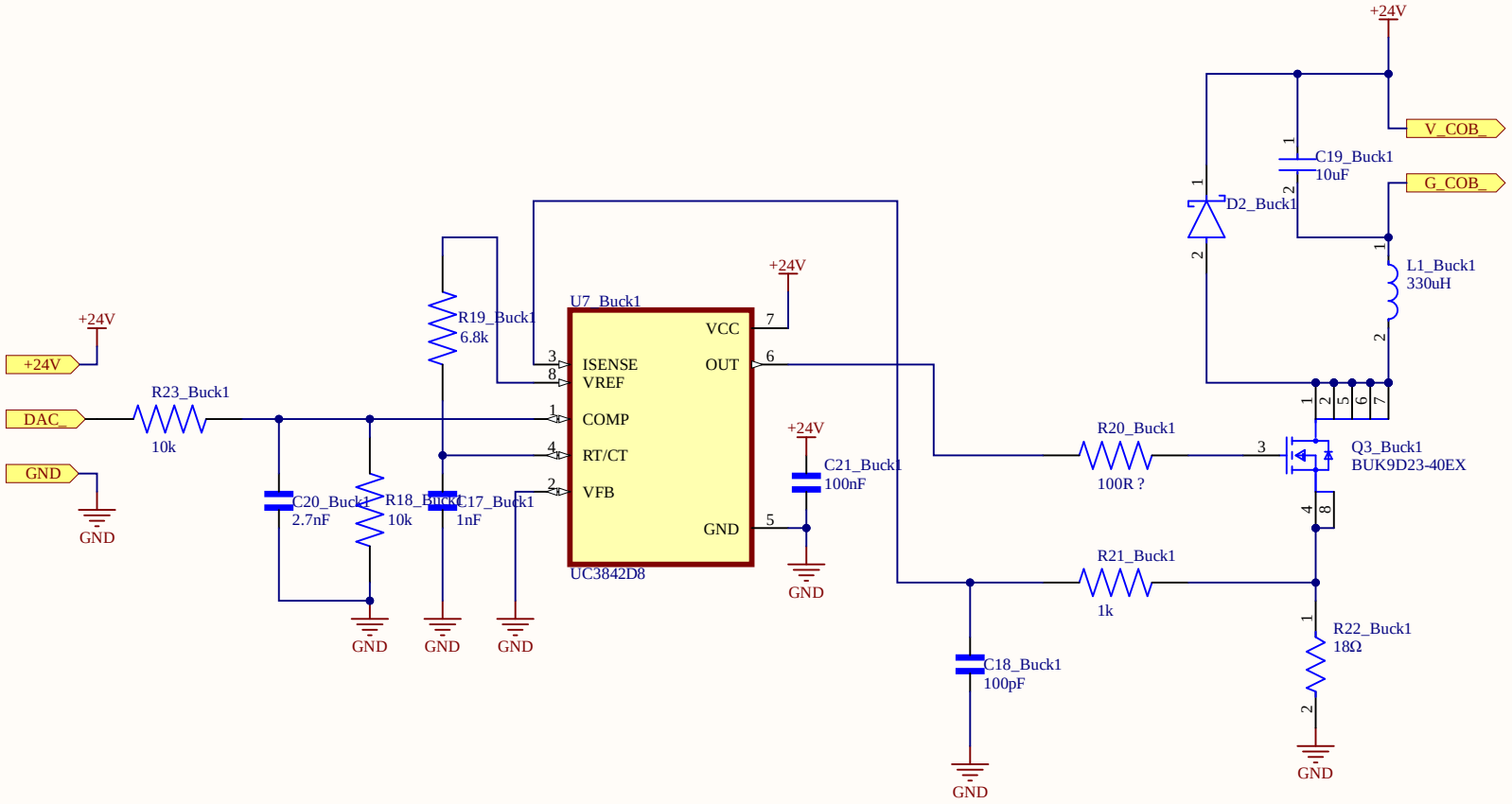

Title		
Size: A4	Number	Revision
Date: 8/19/2025		Sheet of
File: C:\Users\..\Buck_DLS.SchDoc		Drawn By:

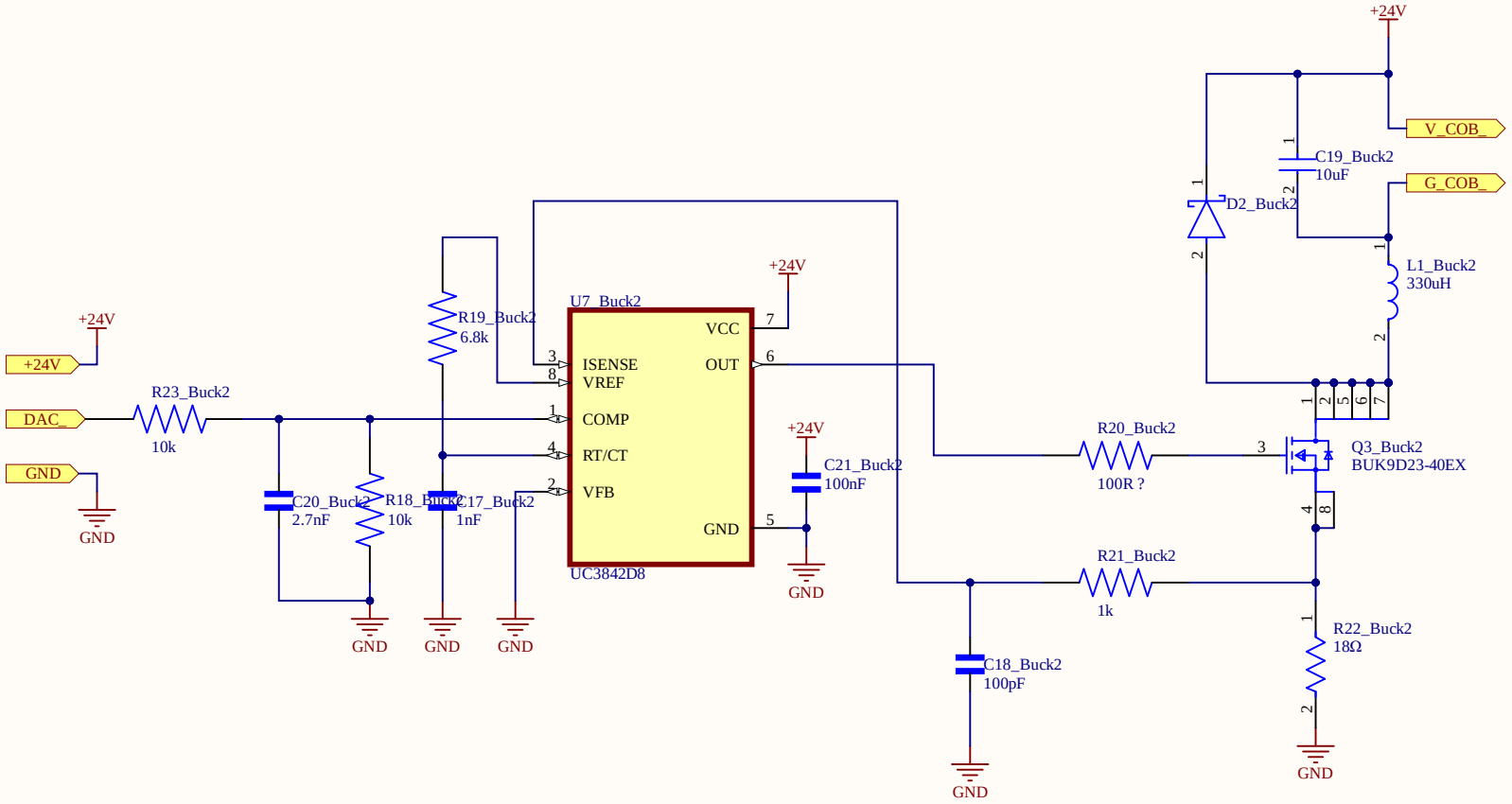

Title		
Size: A4	Number	Revision
Date: 8/19/2025		Sheet of
File: C:\Users\..\Buck_DLS.SchDoc		Drawn By:

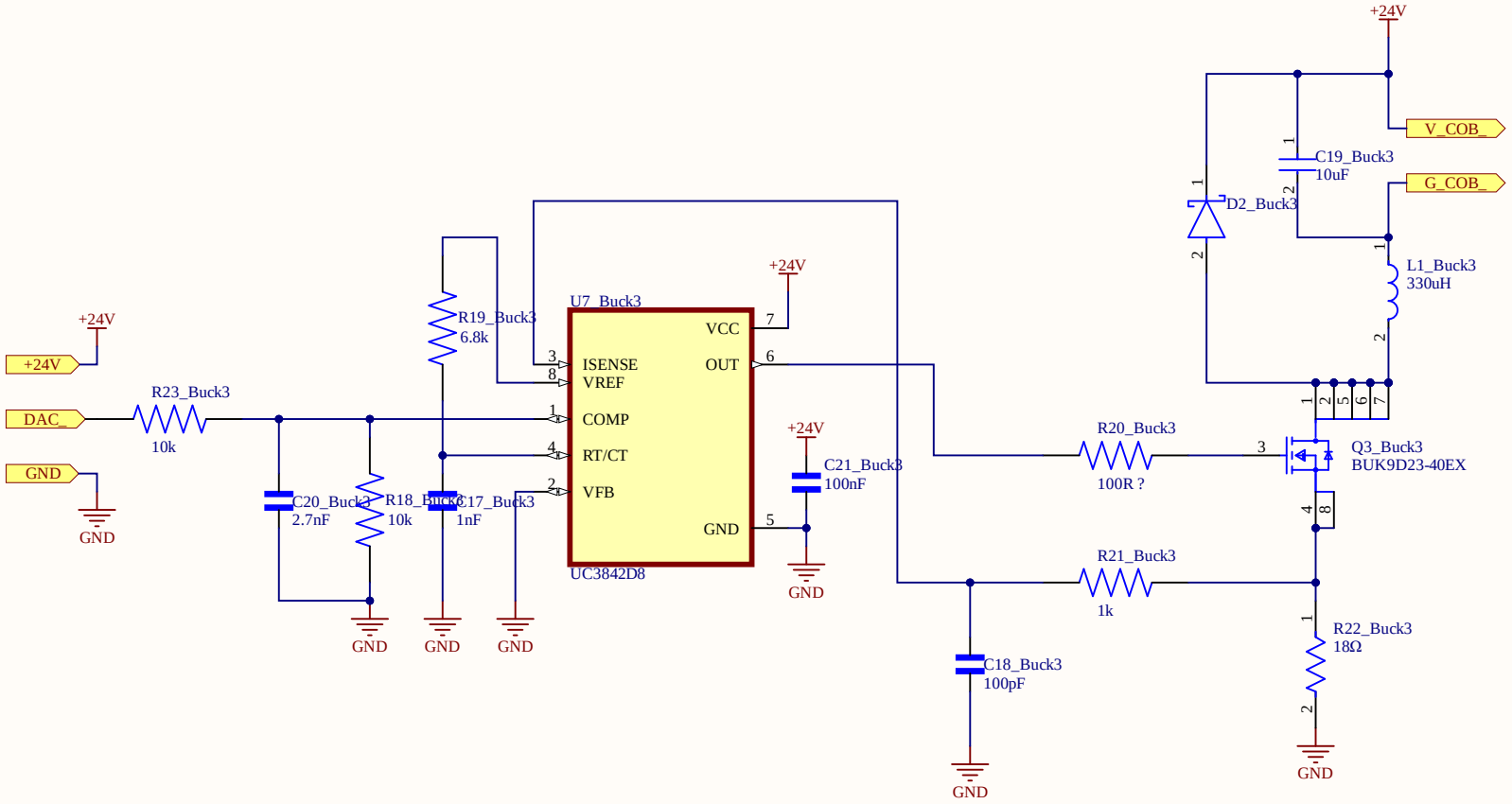

Title		
Size: A4	Number	Revision
Date: 8/19/2025		Sheet of
File: C:\Users\..\Buck_DLS.SchDoc		Drawn By:

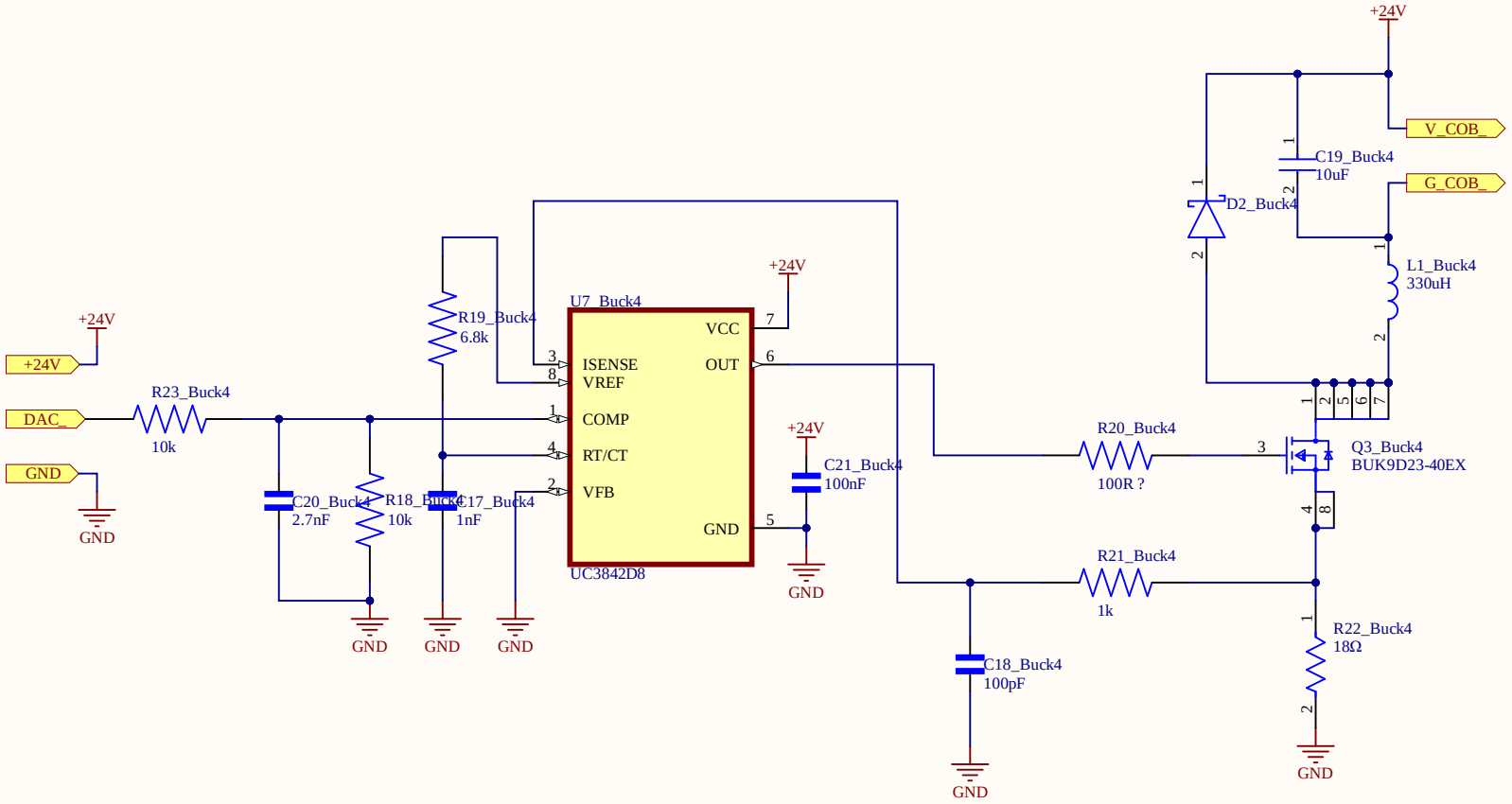

Title		
Size: A4	Number	Revision
Date: 8/19/2025		Sheet of
File: C:\Users\..\Buck_DLS.SchDoc		Drawn By:

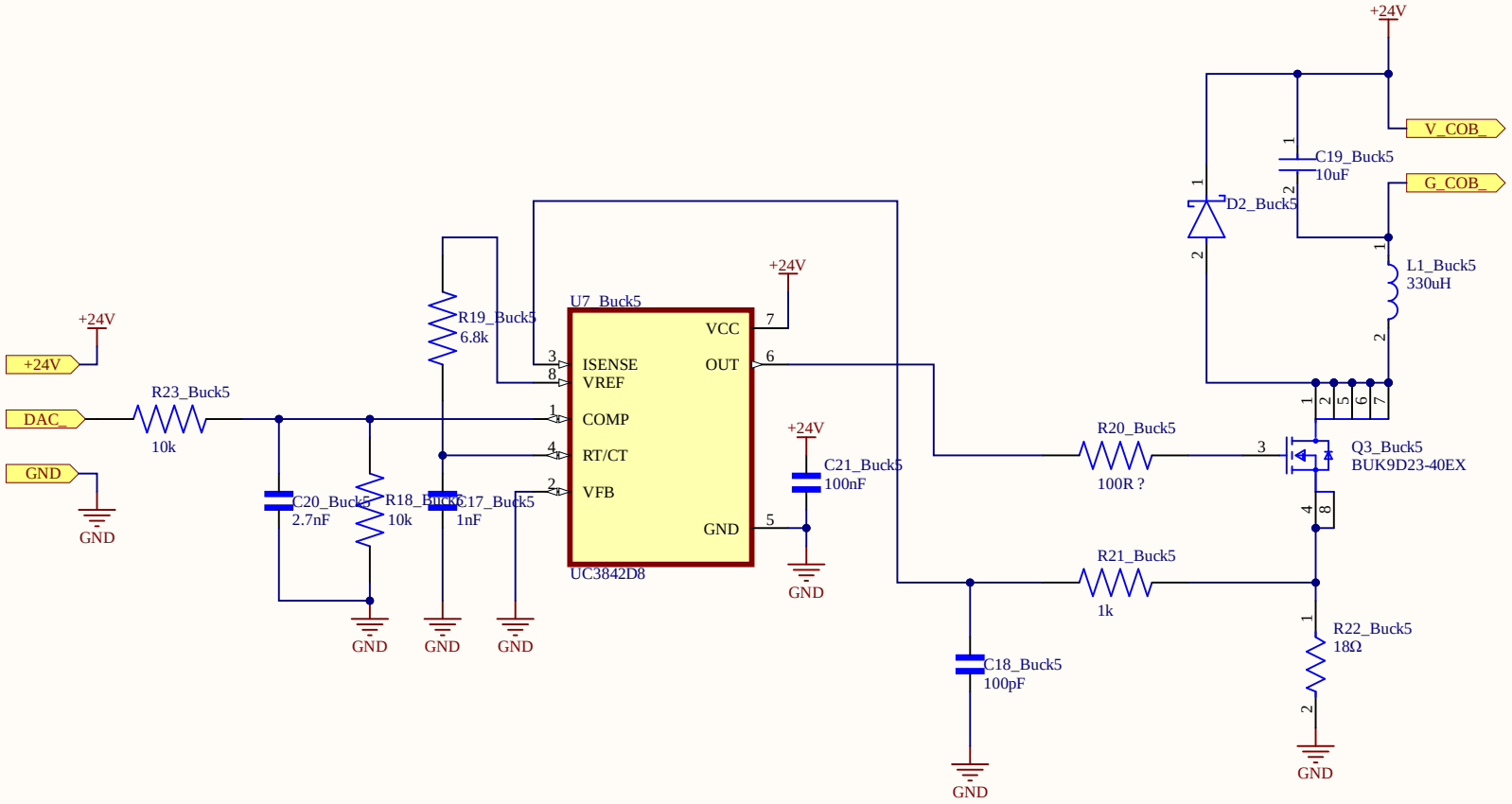

Title		
Size: A4	Number	Revision
Date: 8/19/2025		Sheet of
File: C:\Users\..\Buck_DLS.SchDoc		Drawn By:

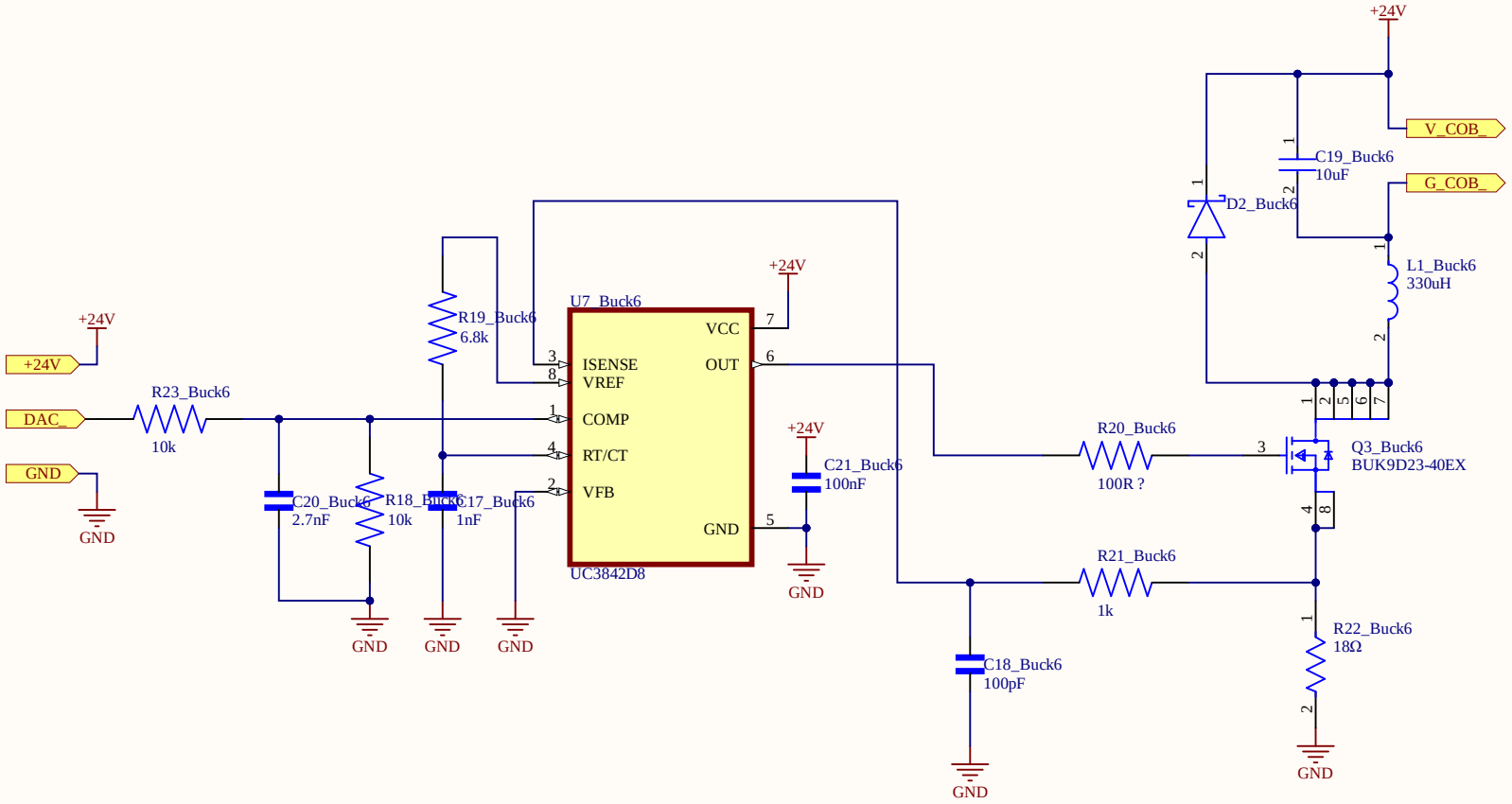

Title		
Size: A4	Number	Revision
Date: 8/19/2025		Sheet of
File: C:\Users\..\Buck_DLS.SchDoc		Drawn By:

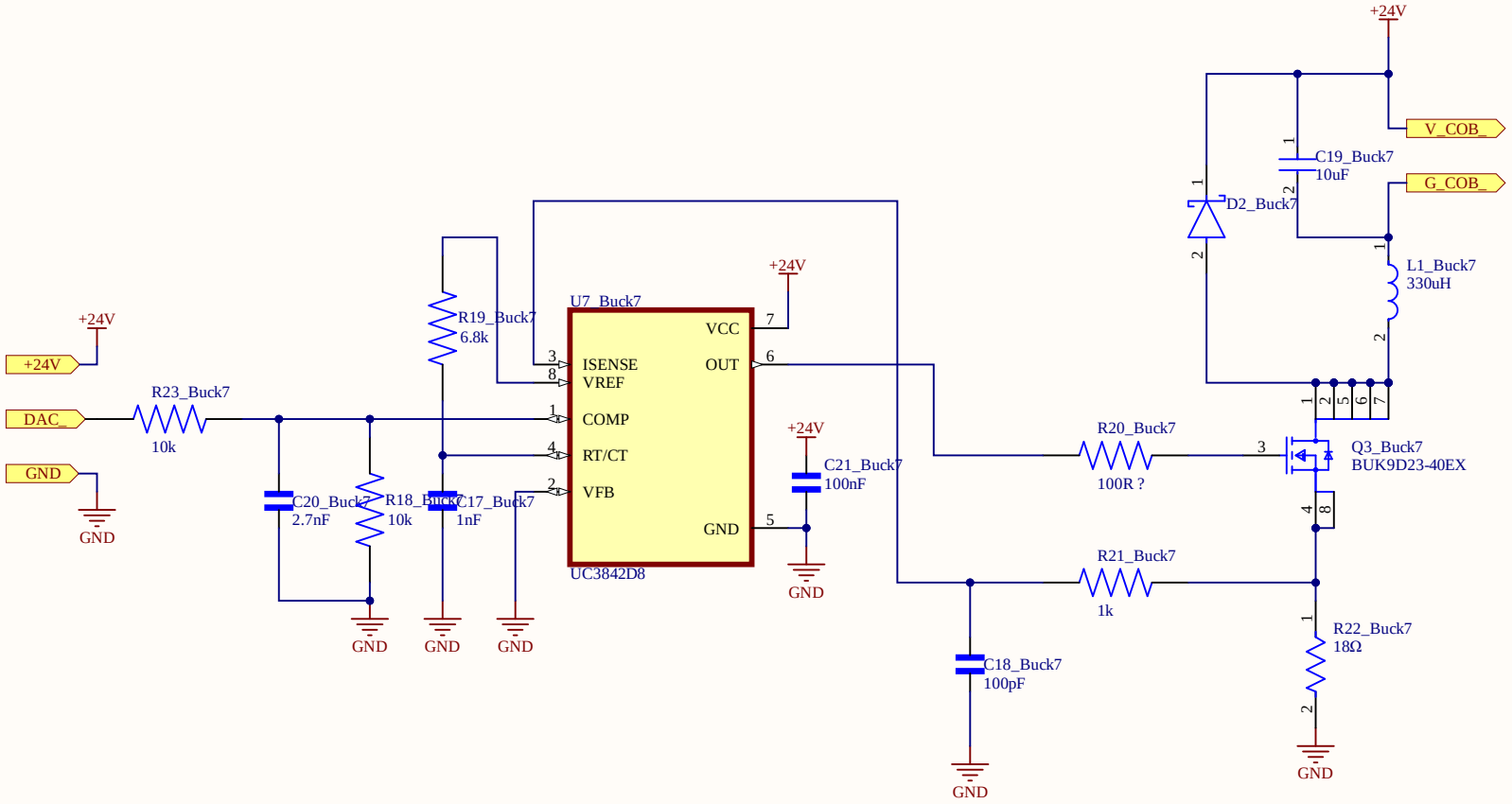

Title		
Size: A4	Number	Revision
Date: 8/19/2025		Sheet of
File: C:\Users\..\Buck_DLS.SchDoc		Drawn By:

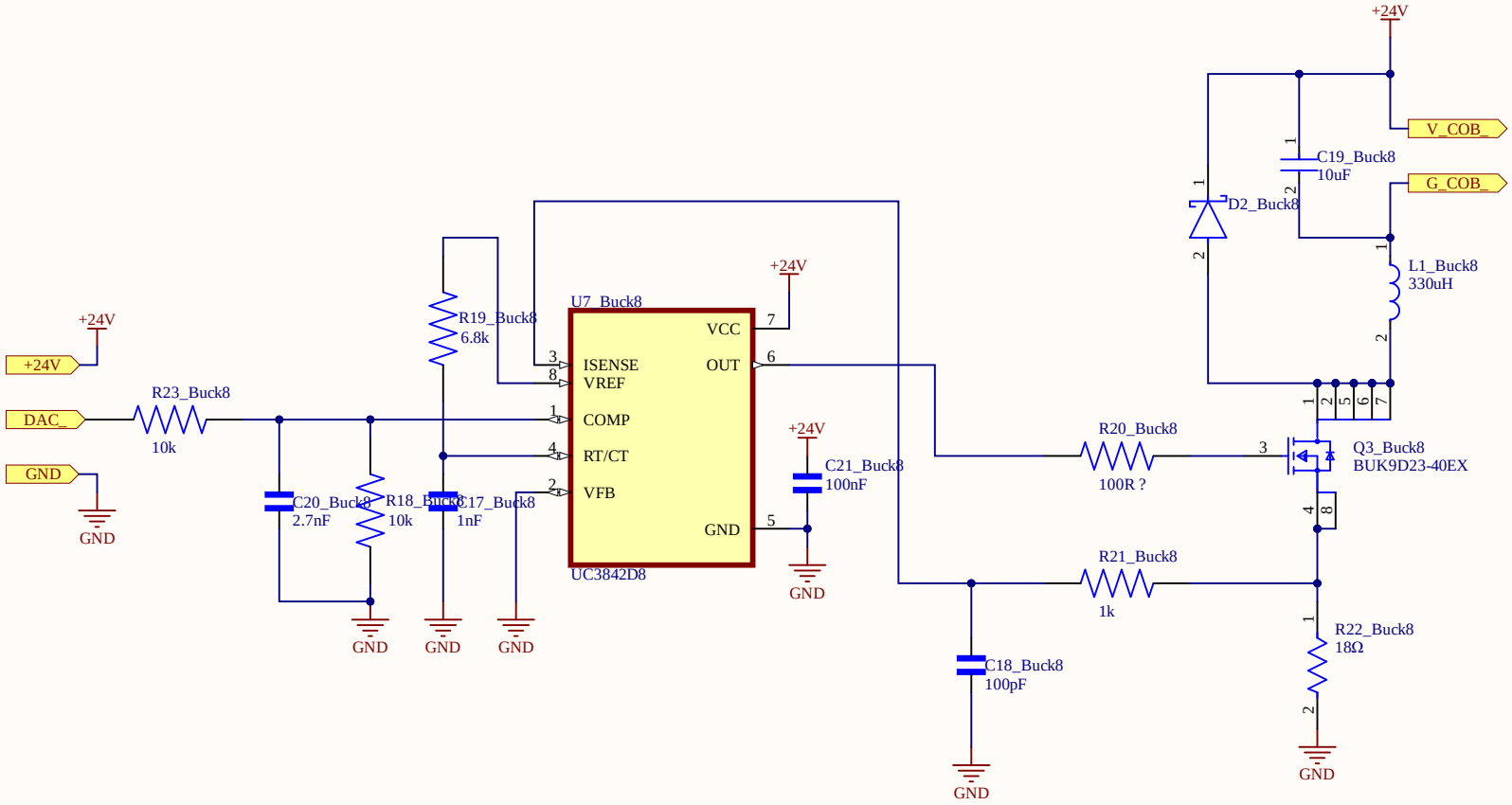

Title		
Size: A4	Number	Revision
Date: 8/19/2025		Sheet of
File: C:\Users\..\Buck_DLS.SchDoc		Drawn By:

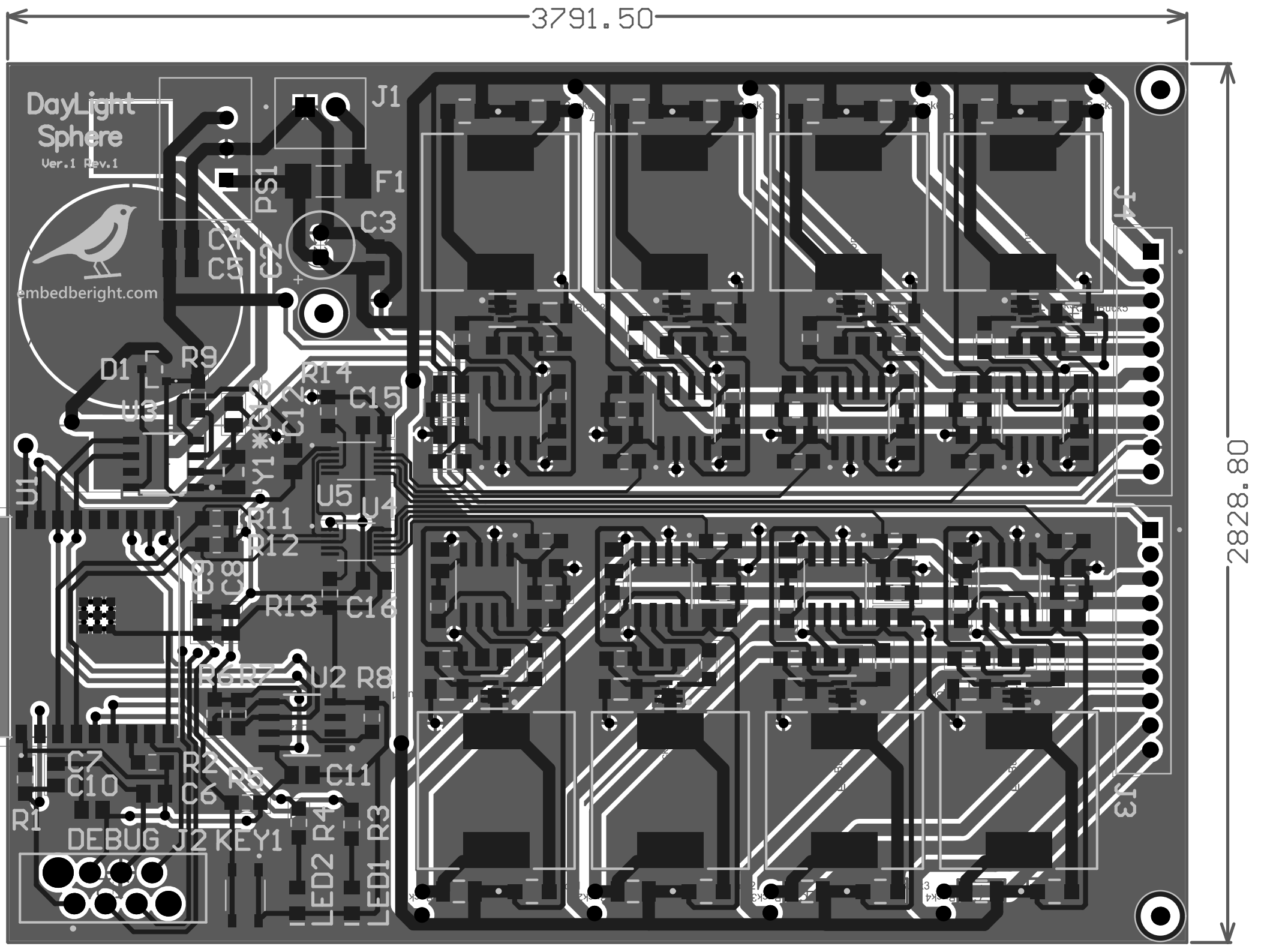
3791.50
2828.80
DayLight Sphere
Ver.1 Rev.1
embedberight.com
J1
F1
PS1
C3
C4
C5
C2
D1
R9
R14
C15
U3
C12
Y1
U1
U5
U4
R11
R12
C8
R13
C16
R6
R7
U2
R8
C7
C10
R2
R5
C6
C11
R1
DEBUG
J2
KEY1
ED2
R4
ED1
R3
J4
J3

Board Stack Report