UM1956
User manual

STM32 Nucleo-32 board

Introduction

The STM32 Nucleo-32 board (NUCLEO-F031K6, NUCLEO-F042K6, NUCLEO-F303K8, NUCLEO-L011K4, NUCLEO-L031K6, NUCLEO-L432KC) provides an affordable and flexible way for users to try out new concepts and build prototypes with STM32 microcontroller, choosing from the various combinations of performance, power consumption and features. The Arduino™ Nano connectivity support makes it easy to expand the functionality of the Nucleo-32 open development platform with a wide choice of specialized shields. The STM32 Nucleo-32 board does not require any separate probe as it integrates the ST-LINK/V2-1 debugger/programmer and it comes with the STM32 comprehensive software HAL library, together with various packaged software examples, as well as direct access to the ARM® mbed™ online resources at http: //mbed.org.

Figure 1. STM32 Nucleo-32 board

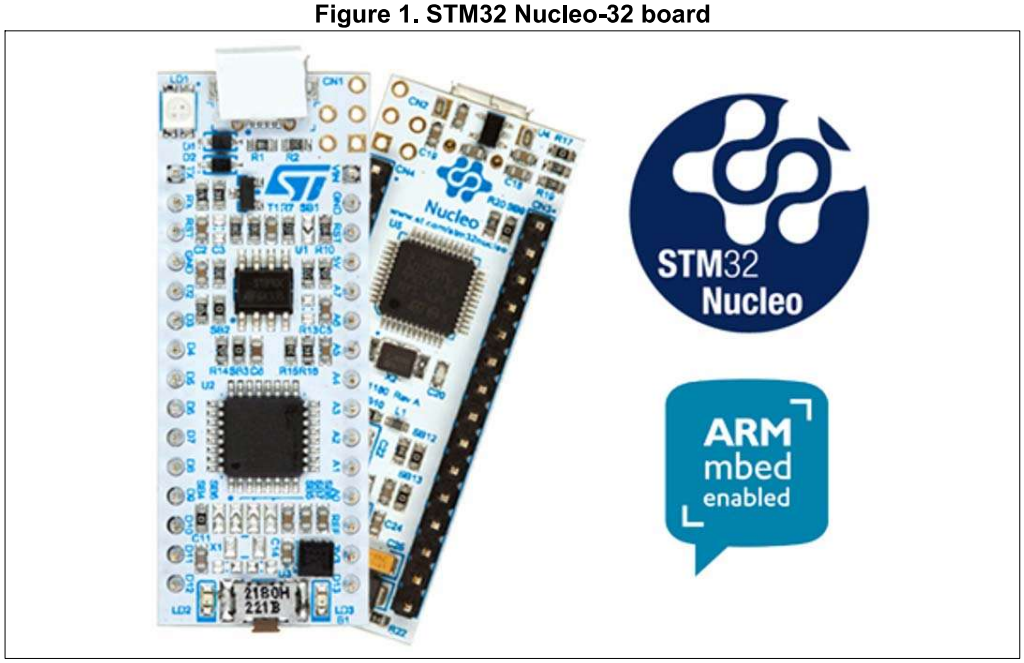

1. Picture not contractual.

Contents

1 Features 6

2 Product marking 7

3 Ordering information 7

4 Conventions 8

5 Quick start 9

5.1 Getting started 9

5.2 System requirements 9

6 Hardware layout and configuration 10

6.1 STM32 Nucleo-32 board layout 11

6.2 STM32 Nucleo-32 board mechanical drawing 13

6.3 Embedded ST-LINK/V2-1 14

6.3.1 Drivers 14

6.3.2 ST-LINK/V2-1 firmware upgrade 15

6.4 Power supply and power selection 16

6.4.1 Power supply input from USB connector 16

6.4.2 External power supply inputs 17

VIN or +5V power supply 17

+3V3 power supply 18

6.4.3 External power supply output 18

6.5 LEDs 18

6.6 Push-button 18

6.7 JP1 (IDD) 19

6.8 OSC clock 19

6.9 USART virtual communication 20

6.10 Solder bridges 20

6.11 Arduino Nano connectors 21

7 Electrical schematics 29

Appendix A Compliance statements 32

A.1 Federal Communications Commission (FCC) and Industry Canada (IC) Compliance Statements32

A.1.1 FCC Compliance Statement 32

Part 15.1933 32

Part 15.105 32

Part 15.21 32

A.1.2 IC Compliance Statement 32

Compliance Statement 32

Déclaration de conformité 32

8 Revision history 33

List of tables

Table 1. Ordering information . . . 7
Table 2. ON/OFF conventions . . . 8
Table 3. SB1 configuration . . . 16
Table 4. External power sources . . . 17
Table 5. OSC clock configurations . . . 19
Table 6. Virtual communication configuration . . . 20
Table 7. Solder bridges . . . 20
Table 8. Arduino Nano connectors on NUCLEO-F031K6 . . . 21
Table 9. Arduino Nano connectors on NUCLEO-F042K6 . . . 23
Table 10. Arduino Nano connectors on NUCLEO-F303K8 . . . 24
Table 11. Arduino Nano connectors on NUCLEO-L011K4 . . . 25
Table 12. Arduino Nano connectors on NUCLEO-L031K6 . . . 26
Table 13. Arduino Nano connectors on NUCLEO-L432KC . . . 27
Table 14. Document revision history . . . 33

List of figures

Figure 1. STM32 Nucleo-32 board 1
Figure 2. Hardware block diagram 10
Figure 3. STM32 Nucleo-32 board top layout 11
Figure 4. STM32 Nucleo-32 board bottom layout 12
Figure 5. STM32 Nucleo-32 board mechanical drawing 13
Figure 6. USB composite device 14
Figure 7. NUCLEO-F031K6, NUCLEO-F042K6, NUCLEO-F303K8 pin assignment 28
Figure 8. NUCLEO-L011K4, NUCLEO-L031K6 and NUCLEO-L432KC pin assignment 28
Figure 9. STM32 Nucleo-32 board (top view) 29
Figure 10. MCU 30
Figure 11. ST-LINK/V2-1 31

1 Features

- STM32 microcontrollers in 32-pin packages
- Extension with Arduino™ Nano connectivity
- ARM® mbed™-enabled (see http: //mbed.org)
- On-board ST-LINK/V2-1 debugger/programmer with SWD connector:
  - USB re-enumeration capability. Three different interfaces supported on USB: virtual Com port, mass storage, debug port
- Flexible board power supply:
  - USB VBUS
  - External source
- Three LEDs:
  - USB communication (LD1), power LED (LD2), user LED (LD3)
- Reset push-button
- Supported by wide choice of Integrated Development Environments (IDEs) including IAR™, Keil®, GCC-based IDEs (AC6: SW4STM32,...)

2 Product marking

Evaluation tools marked as "ES" or "E" are not yet qualified and therefore they are not ready to be used as reference design or in production. Any consequences deriving from such usage will not be at ST charge. In no event, ST will be liable for any customer usage of these engineering sample tools as reference design or in production.

"E" or "ES" marking examples of location:

- On the targeted STM32 that is soldered on the board (for illustration of STM32 marking, refer to the section “Package information” of the STM32 datasheet at *www.st.com*).
- Next to the evaluation tool ordering part number, that is stuck or silk-screen printed on the board.

3 Ordering information

The order codes and the respective targeted STM32 are listed in the below *Table 1*.

Table 1. Ordering information

Target STM32	Order code
STM32F031K6T6	NUCLEO-F031K6
STM32F042K6T6	NUCLEO-F042K6
STM32F303K8T6	NUCLEO-F303K8
STM32L011K4T6	NUCLEO-L011K4
STM32L031K6T6	NUCLEO-L031K6
STM32L432KCU6	NUCLEO-L432KC

The meaning of NUCLEO-TXXXKY codification is as follows:

- T describes the STM32 product line (T for F or L)
- XXX describes the silicon special features
- K describes the pin count (K for 32 pins)
- Y describes the memory size (4 for 16 Kbytes, 6 for 32 Kbytes, 8 for 64 Kbytes, C for 256 Kbytes)

The last six characters (e.g.: L031K6) of the order code, are printed on a sticker placed at the top or bottom side of the board.

4 Conventions

Table 2 provides the conventions used for the ON and OFF settings in the present document.

Table 2. ON/OFF conventions

Convention	Definition
Jumper JPx ON	Jumper fitted
Jumper JPx OFF	Jumper not fitted
Solder bridge SBx ON	SBx connections closed by solder or 0 ohm resistor
Solder bridge SBx OFF	SBx connections left open

In this document the reference is “STM32 Nucleo-32 board” for all information that is common to all sale types.

5 Quick start

The STM32 Nucleo-32 board is a low-cost and easy-to-use development kit used to quickly evaluate and start a development with an STM32 microcontroller in LQFP32 or UFQFPN32 package.

Before installing and using the product, accept the Evaluation Product License Agreement that can be found at www.st.com/epla.

For more information on the STM32 Nucleo-32 board and to access the demonstration software, visit the www.st.com/stm32nucleo webpage.

5.1 Getting started

Follow the sequence below, to configure the STM32 Nucleo-32 board and launch the demonstration software:

- Check solder bridge position on the board, SB1 OFF, SB14 ON (internal regulator), JP1 ON (IDD) selected.
- For a correct identification of all device interfaces from the host PC and before connecting the board, install the Nucleo USB driver, available at the www.st.com/stm32nucleo webpage.
- To power the board connect the STM32 Nucleo-32 board to a PC through the USB connector CN1 with a USB cable Type-A to Micro-B. The red LED LD2 (PWR) and LD1 (COM) light up and green LED LD3 blinks.
- Remove the jumper placed between D2 (CN3 pin 5) and GND (CN3 pin 4).
- Observe how the blinking frequency of the green LED LD3 changes, when the jumper is in place or when it is removed.
- The demonstration software and several software examples on how to use the STM32 Nucleo-32 board features, are available at the www.st.com/stm32nucleo webpage.
- Develop an application using the available examples.

5.2 System requirements

- Windows® (XP, 7, 8)
- USB Type-A to Micro-B USB cable

6 Hardware layout and configuration

The STM32 Nucleo-32 board is based on a 32-pin STM32 microcontroller in LQFP or UFQFPN package.

Figure 2 illustrates the connections between the STM32 and its peripherals (ST-LINK/V2-1, push-button, LED, and Arduino Nano connectors).

Figure 3: STM32 Nucleo-32 board top layout and *Figure 4: STM32 Nucleo-32 board bottom layout* show the location of these connections on the STM32 Nucleo-32 board.

Figure 2. Hardware block diagram

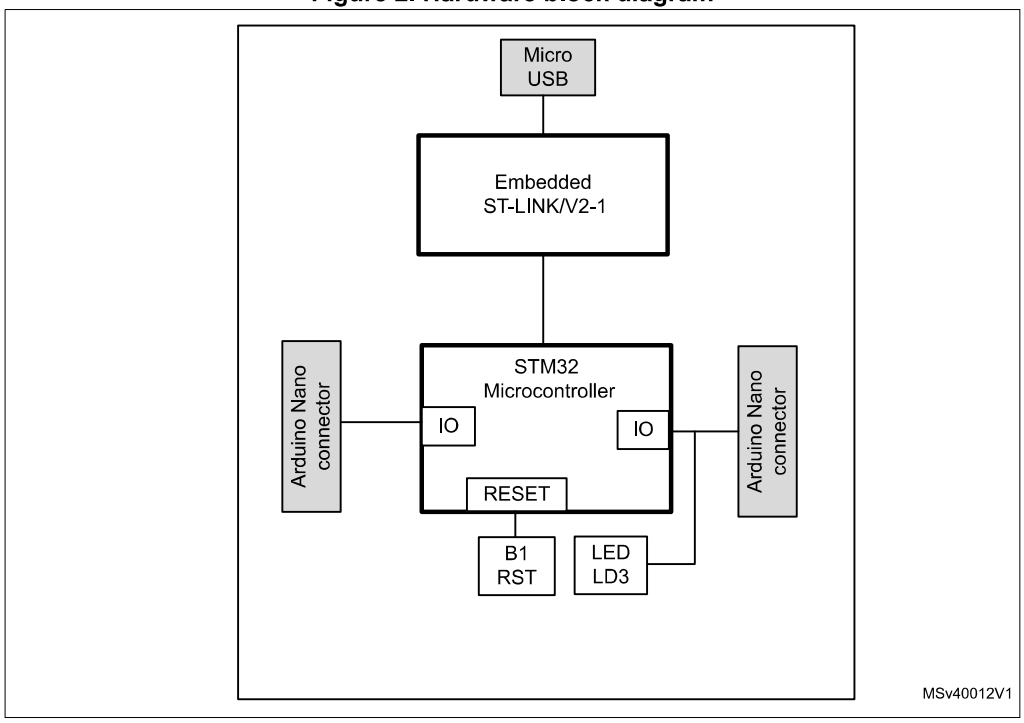

6.1 STM32 Nucleo-32 board layout

Figure 3. STM32 Nucleo-32 board top layout

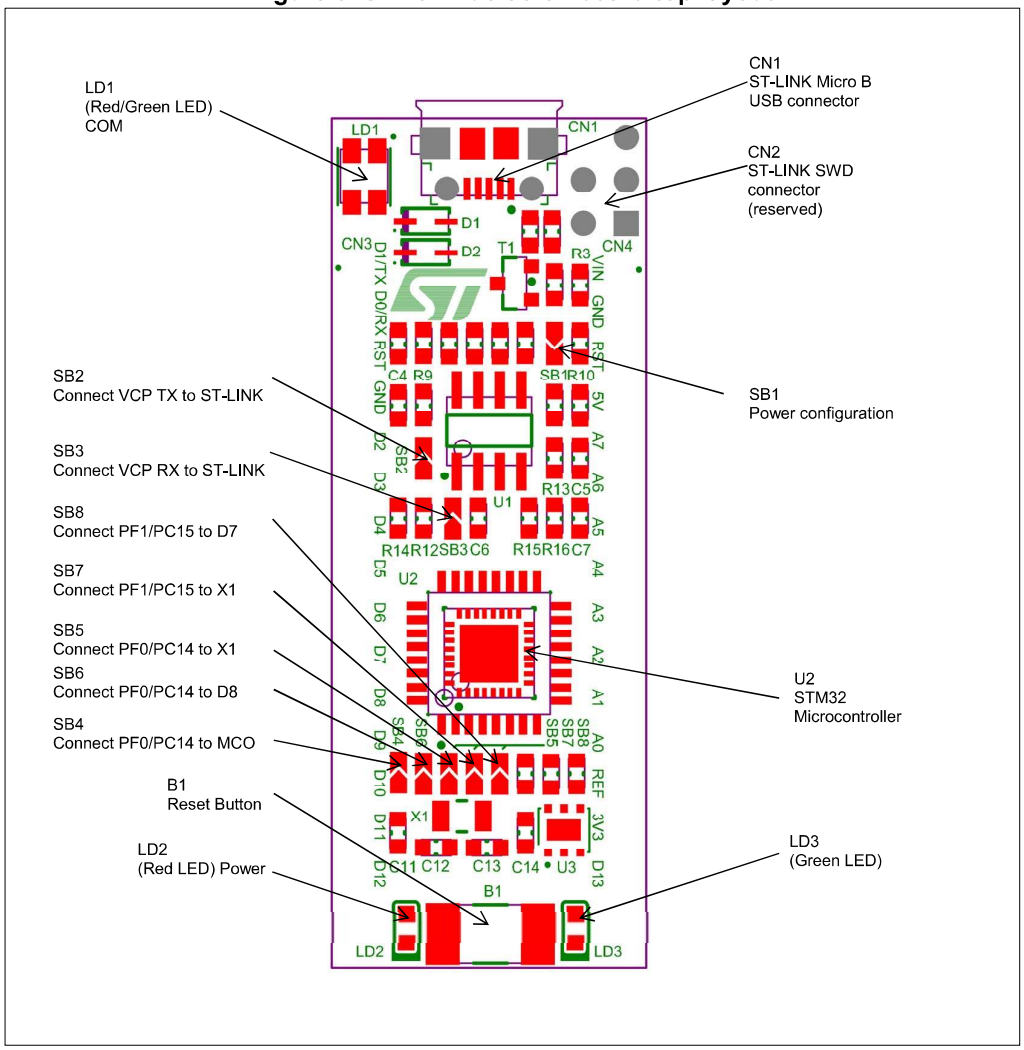

Figure 4. STM32 Nucleo-32 board bottom layout

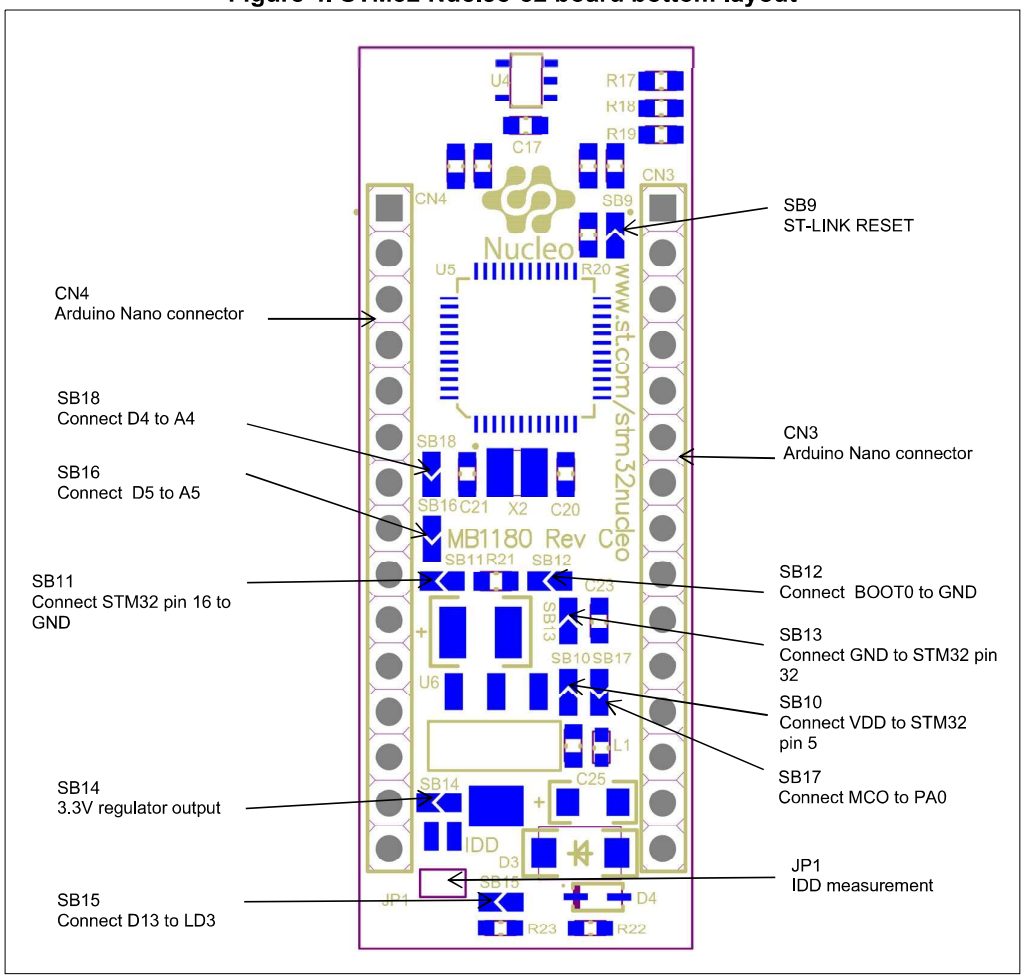

6.2 STM32 Nucleo-32 board mechanical drawing

Figure 5. STM32 Nucleo-32 board mechanical drawing

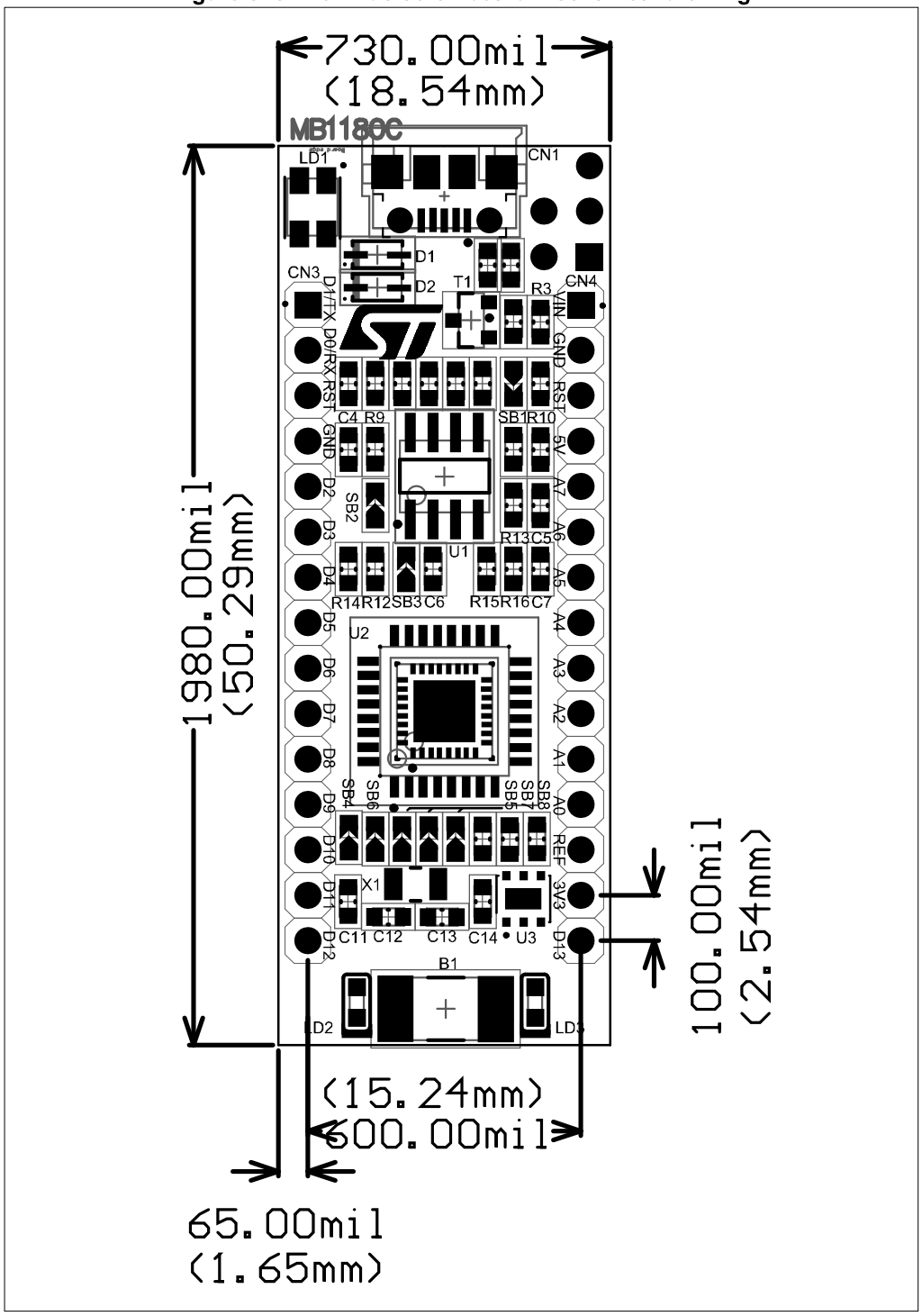

6.3 Embedded ST-LINK/V2-1

The ST-LINK/V2-1 programming and debugging tool is integrated in the STM32 Nucleo-32 board. The ST-LINK/V2-1 makes the STM32 Nucleo-32 board mbed enabled.

The embedded ST-LINK/V2-1 supports only the SWD for STM32 devices. For information about debugging and programming features refer to: *ST-LINK/V2 in-circuit debugger/programmer for STM8 and STM32* User manual (UM1075), which describes in detail all the ST-LINK/V2 features.

The new features supported by the ST-LINK/V2-1 comparing with ST-LINK/V2 are:

- USB software re-enumeration
- Virtual Com port interface on USB
- Mass storage interface on USB
- USB power management request for more than 100 mA power on USB

The features not supported on ST-LINK/V2-1 are:

- SWIM interface
- Minimum supported application voltage limited to 3 V

Known limitation:

- Activating the readout protection on the STM32 target, prevents the target application from running afterwards. The target readout protection must be kept disabled on ST-LINK/V2-1 boards.

The embedded ST-LINK/V2-1 is directly connected to the SWD port of the target STM32.

6.3.1 Drivers

The ST-LINK/V2-1 requires a dedicated USB driver, which, for Windows XP, 7 and 8, can be found at *www.st.com*.

In case the STM32 Nucleo-32 board is connected to the PC before the driver is installed, some Nucleo interfaces may be declared as “Unknown” in the PC device manager. In this case the user must install the driver files (refer to *Figure 6*) and from the device manager update the driver of the connected device.

Note: Prefer using the “USB Composite Device” handle for a full recovery.

Figure 6. USB composite device

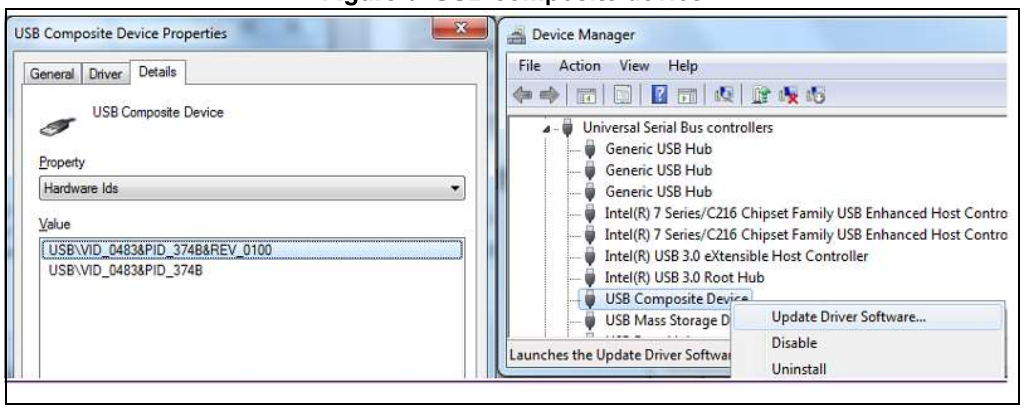

6.3.2 ST-LINK/V2-1 firmware upgrade

The ST-LINK/V2-1 embeds a firmware upgrade mechanism for in-situ upgrade through the USB port. As the firmware may evolve during the lifetime of the ST-LINK/V2-1 product (for example new functionalities added, bug fixes, support for new microcontroller families), it is recommended to visit *www.st.com* before starting to use the STM32 Nucleo-32 board and periodically, to stay up-to-date with the latest firmware version.

6.4 Power supply and power selection

The power supply is provided either by the host PC through the USB cable, or by an external source: VIN (7 V-12 V), +5 V (5 V) or +3V3 power supply pins on CN4. In case VIN, +5 V or +3V3 is used to power the STM32 Nucleo-32 board, this power source must comply with the standard EN-60950-1: 2006+A11/2009, and must be Safety Extra Low Voltage (SELV) with limited power capability.

In case the power supply is +3V3, the ST-LINK is not powered and cannot be used.

6.4.1 Power supply input from USB connector

The STM32 Nucleo-32 board and shield board can be powered from the ST-LINK USB connector CN1. Note that only the ST-LINK part is power supplied before the USB enumeration phase, as the host PC only provides 100 mA to the boards at that time. During the USB enumeration, the STM32 Nucleo-32 board requires 300 mA of current to the host PC. If the host is able to provide the required power, the targeted STM32 microcontroller is powered and the red LED LD2 is turned on, thus the STM32 Nucleo-32 board and its shield consume a maximum of 300 mA current and not more. If the host is not able to provide the required current, the targeted STM32 microcontroller and the shield board are not power supplied. As a consequence the red LED LD2 stays turned off. In such case it is mandatory to use an external power supply as explained in the next *Section 6.4.2: External power supply inputs*.

SB1 is configured according to the maximum current consumption of the board. SB1 can be set to on to inform the host PC that the maximum current consumption does not exceed 100 mA (even when Arduino Nano shield is plugged). In such condition USB enumeration will always succeed since no more than 100 mA is requested to the host PC. Possible configurations of SB1 are summarized in *Table 3*.

Table 3. SB1 configuration

Solder bridge state	Power supply	Allowed current
SB1 OFF (default)	USB power through CN1	300 mA max
SB1 ON		100 mA max
SB1 (ON/OFF)	VIN, +3V3 or +5 V power	For current limitation refer to *Table 4*

Warning: If the maximum current consumption of the STM32 Nucleo-32 board and its shield board exceed 300 mA, it is mandatory to power the STM32 Nucleo-32 board, using an external power supply connected to VIN, +5 V or +3V3.

Note: In case the board is powered by a USB charger, there is no USB enumeration, so the LED LD2 remains set to off permanently and the target STM32 is not powered. In this specific case the SB1 must be set to on, to allow the target STM32 to be powered anyway.

6.4.2 External power supply inputs

The STM32 Nucleo-32 board and its shield boards can be powered in three different ways from an external power supply, depending on the voltage used. The three power sources are summarized in the *Table 4*.

Table 4. External power sources

Input power name	Connector pin	Voltage range	Max current	Limitation
VIN	CN4 pin 1	7 V to 12 V	800 mA	From 7 V to 12 V only and input current capability is linked to input voltage: 800mA input current when VIN=7 V 450mA input current when 7 V< VIN <9 V 300 mA input current when 10 V> VIN >9 V less than 300 mA input current when VIN>10 V
+5 V	CN4 pin 4	4.75 V to 5.25 V	500 mA	ST-LINK not powered
+3V3	CN4 pin 14	3 V to 3.6 V	-	ST-LINK not powered and SB14 and SB9 must be off.

VIN or +5V power supply

When powered from VIN or +5 V, it is still possible to use ST-LINK for communication for programming or debugging only, but it is mandatory to power the board first, using VIN or +5 V, then to connect the USB cable to the PC. By this way the enumeration will succeed anyway, thanks to the external power source.

The following power sequence procedure must be respected:

1. Check that SB1 is off
2. Connect the external power source to VIN or +5 V
3. Power on the external power supply 7 V< VIN < 12 V to VIN, or 5 V for +5 V
4. Check red LED LD2 is turned on
5. Connect the PC to USB connector CN1

If this order is not respected, the board may be powered by VBUS first, then by VIN or +5 V, and the following risks may be encountered:

1. If more than 300 mA current is needed by the board, the PC may be damaged or current supplied is limited by the PC. As a consequence the board is not powered correctly.
2. 300 mA is requested at enumeration (since SB1 must be off) so there is the risk that the request is rejected and the enumeration does not succeed if the the PC cannot provide such current. Consequently the board is not power supplied (LED LD2 remains off).

+3V3 power supply

Using the +3V3 (CN4 pin 14) directly as power input, can be interesting, for instance, in case the 3.3 V is provided by a shield board. In this case the ST-LINK is not powered, thus programming and debugging features are not available. When the board is powered by +3V3 (CN4 pin 14), the solder bridge SB14 and SB9 (NRST) must be off.

6.4.3 External power supply output

When powered by USB or VIN, the +5 V (CN4 pin 4) can be used as output power supply for an Arduino Nano shield. In this case, the maximum current of the power source specified in *Table 4: External power sources* must be respected.

The +3.3 V (CN4 pin 14) can be used also as power supply output. The current is limited by the maximum current capability of the regulator U3 (500 mA max).

6.5 LEDs

The tricolor LED (green, orange, red) LD1 (COM) provides information about ST-LINK communication status. LD1 default color is red. LD1 turns to green to indicate that the communication is in progress between the PC and the ST-LINK/V2-1, with the following setup:

- Slow blinking red/off: at power-on before USB initialization
- Fast blinking red/off: after the first correct communication between PC and ST-LINK/V2-1 (enumeration)
- Red on: when initialization between PC and ST-LINK/V2-1 is completed
- Green on: after a successful target communication initialization
- Blinking red/green: during communication with target
- Green on: communication finished and successful
- Orange on: communication failure

User LD3: the green LED is a user LED connected to Arduino Nano signal D13 corresponding to the STM32 I/O PB3 (pin 26). Refer to *Table 8, Table 9*, *Table 10*, *Table 11* and *Table 12* for concerned STM32:

- When the I/O is HIGH value, the LED is on
- When the I/O is LOW, the LED is off

PWR LD2: the red LED indicates that the STM32 part is powered and +5 V power is available.

6.6 Push-button

B1 RESET: the push-button is connected to NRST, and it is used to reset the STM32.

6.7 JP1 (IDD)

JP1, labeled IDD, is used to measure the STM32 microcontroller consumption by removing the jumper and connecting an ammeter:

- JP1 on: STM32 is powered (default)
- JP1 off: an ammeter must be connected to measure the STM32 current

If there is no ammeter, STM32 is not powered.

6.8 OSC clock

U2 pin 2 and pin 3 can be used as OSC clock input or as Arduino Nano D8 and D7 GPIO. There are four ways to configure the pins corresponding to different STM32 and clock usage (refer to *Table 5*).

Table 5. OSC clock configurations

Solder bridge					STM32	Clock configuration
SB4	SB17	SB6	SB8	SB5 and SB7		
ON	OFF	OFF	ON	OFF	STM32Fxxx	MCO from ST-LINK connected to OSCIN (PF0) (1)
OFF	OFF	ON	ON	OFF		HSI configuration (default configuration)
OFF	ON	OFF	OFF	OFF	STM32Lxxx	MCO from ST-LINK connected to CKIN (PA0)(1)
OFF	OFF	OFF	OFF	ON		32K LSE mounted on X1 (default configuration)
OFF	OFF	ON	ON/OFF	OFF	All	Arduino Nano D7 connected to PF0 / PC14
OFF	OFF	ON/OFF	ON	OFF		Arduino Nano D8 connected to PF1 / PC15

1. In applications where VCP is used for communication at a speed higher than 9600 bauds, it may be needed to use this solder bridge configuration, to use 8 MHz clock (MCO from ST-LINK) and get a more precise frequency.

Boards with STM32Lxxx are delivered with 32.768 KHz crystal (X1). Associated capacitors and solder bridges (C12, C13 and SB4 to SB8) are configured to support LSE by default.

Boards with STM32Fxxx are delivered without crystal (X1). Associated capacitors (C12, C13) are not populated and SB4 to SB8 are configured to support HSI by default.

6.9 USART virtual communication

Thanks to SB2 and SB3, the USART interface of STM32 available on PA2 (TX) and PA15 (RX), can be connected to ST-LINK/V2-1. When USART is not used it is possible to use PA2 as Arduino Nano A7. Refer to *Table 6*.

Table 6. Virtual communication configuration

Bridge	State(1)	Description
SB2	OFF	PA2 is connected to CN4 pin 5 as Arduino Nano analog input A7 and disconnected from ST-LINK USART.
	ON	PA2 is connected to ST-LINK as virtual Com TX (default).
SB3	OFF	PA15 is not connected.
	ON	PA15 is connected to ST-LINK as virtual Com RX (default).

1. The default configuration is reported in bold style.

6.10 Solder bridges

Table 7. Solder bridges

Bridge	State(1)	Description
SB10 (VREF+)	**ON**	VREF+ on STM32 is connected to VDD.
	OFF	VREF+ on STM32 is not connected to VDD and it is provided by pin 13 of CN4.
SB15 (LD3-LED)	**ON**	Green user LED LD3 is connected to D13 of Arduino Nano signal.
	OFF	Green user LED LD3 is not connected.
SB9 (NRST)	**ON**	The NRST signal of ST-LINK is connected to the NRST pin of the STM32.
	OFF	The NRST signal of ST-LINK is not connected to the NRST pin of the STM32, when used external power (+3V3, +5 V) as power supply.
SB11 (PB2/VSS)	**ON**	Pin 16 of STM32 (U2) is connected to VSS.
	OFF	Pin 16 of STM32 (U2) is not connected to VSS, and used as GPIO PB2 for STM32F031.
SB13 (PB8/VSS)	**ON**	Pin 32 of STM32 (U2) is connected to VSS.
	OFF	Pin 32 of STM32 (U2) is not connected to VSS, and used as GPIO PB8 for STM32F031.
SB12 (PB8/BOOT0)	**ON**	Pin 31 of STM32 (U2) is connected to GND via 10K pull-down and used as BOOT0.
	OFF	Pin 16 of STM32 (U2) is not connected and is GPIO PB8 for STM32F042.
SB16	**ON**	STM32 PB6 is connected to CN4 pin 7 for I^2C SDA support on Arduino Nano A5. In such case STM32 PB6 does not support Arduino Nano D5 and PA6 must be configured as input floating.

Table 7. Solder bridges (continued)

Bridge	State[1]	Description
SB16	OFF	CN4 pin 7 is used as Arduino Nano analog input A5 without I^2C support and CN3 pin 8 is available as Arduino Nano D5.
SB18	**ON**	STM32 PB7 is connected to CN4 pin 8 for I^2C SCL support on Arduino Nano A4. In such case STM32 PB7 does not support Arduino Nano D4 and PA5 must be configured as input floating.
	OFF	CN4 pin 8 is used as Arduino Nano analog input A4 without I^2C support and CN3 pin 7 is available as Arduino Nano D4.

1. The default configuration is reported in bold style.

6.11 Arduino Nano connectors

CN3 and CN4 are male connectors compatible with Arduino Nano standard. Most shields designed for Arduino Nano can fit the STM32 Nucleo-32 board.

Caution: The I/Os of STM32 are 3.3 V compatible instead of 5 V for Arduino Nano.

Table 8, *Table 9*, *Table 10, Table 11* and *Table 12* show the pin assignments of each STM32 on Arduino Nano connectors.

Figure 7 and *Figure 8* show Arduino Nano connectors and pin assignments for NUCLEO-F031K6, NUCLEO-F042K6, NUCLEO-F303K8, NUCLEO-L011K4, NUCLEO-L031K6 and NUCLEO-L432KC.

Table 8. Arduino Nano connectors on NUCLEO-F031K6

Connector	Pin number	Pin name	STM32 pin	Function
Left connector				
CN3	1	D1	PA9	USART1_TX[1]
	2	D0	PA10	USART1_RX[1]
	3	RESET	NRST	RESET
	4	GND	-	Ground
	5	D2	PA12	-
	6	D3	PB0	TIM3_CH3
	7	D4[5]	PB7	-
	8	D5[5]	PB6	TIM16_CH1N[2]
	9	D6	PB1	TIM14_CH1
	10	D7[3]	PF0	-
	11	D8[3]	PF1	-
	12	D9	PA8	TIM1_CH1
	13	D10	PA11	SPI_CS[4] || TIM1_CH4
	14	D11	PB5	SPI1_MOSI || TIM3_CH2
	15	D12	PB4	SPI1_MISO

Table 8. Arduino Nano connectors on NUCLEO-F031K6 (continued)

Connector	Pin number	Pin name	STM32 pin	Function
Right connector				
CN4	1	VIN	-	Power input
CN4	2	GND	-	Ground
	3	RESET	NRST	RESET
	4	+5V	-	5V input/output
	5	A7	PA2	ADC_IN2
	6	A6	PA7	ADC_IN7
	7	A5(5)	PA6	ADC_IN6 || I2C1_SCL
	8	A4(5)	PA5	ADC_IN5 || I2C1_SDA
	9	A3	PA4	ADC_IN4
	10	A2	PA3	ADC_IN3
	11	A1	PA1	ADC_IN1
	12	A0	PA0	ADC_IN0
	13	AREF	-	AVDD
	14	+3V3	-	3.3V input/output
	15	D13	PB3	SPI1_SCK

1. Only one USART is available and it is shared between Arduino Nano and VCP. The selection is done by remapping (no need to change the hardware configuration).
2. D5 PWM on inverted channel Timer 16.
3. D7/D8 shared with OSC_IN/OSC_OUT.
4. SPI_CS is made by GPIO.
5. Limitations on A4 and A5, D4 and D5 related to I^2C configuration are explained in *Section 6.10: Solder bridges* according to SB16/SB18 setting.

Table 9. Arduino Nano connectors on NUCLEO-F042K6

Connector	Pin number	Pin name	STM32 pin	Function
Left connector				
CN3	1	D1	PA9	USART1_TX
	2	D0	PA10	USART1_RX
	3	RESET	NRST	RESET
	4	GND	-	Ground
	5	D2	PA12	-
	6	D3	PB0	TIM3_CH3
	7	D4(1)	PB7	-
	8	D5(1)	PB6	TIM16_CH1N(2)
	9	D6	PB1	TIM14_CH1
	10	D7(3)	PF0	-
	11	D8(3)	PF1	-
	12	D9	PA8	TIM1_CH1
	13	D10	PA11	SPI_CS(4) || TIM1_CH4
	14	D11	PB5	SPI1_MOSI || TIM3_CH2
	15	D12	PB4	SPI1_MISO
Right connector				
CN4	1	VIN	-	Power input
	2	GND	-	Ground
	3	RESET	NRST	RESET
	4	+5V	-	5V input/output
	5	A7	PA2	ADC_IN2(5)
	6	A6	PA7	ADC_IN7
	7	A5(1)	PA6	ADC_IN6 || I2C1_SCL
	8	A4(1)	PA5	ADC_IN5 || I2C1_SDA
	9	A3	PA4	ADC_IN4
	10	A2	PA3	ADC_IN3
	11	A1	PA1	ADC_IN1
	12	A0	PA0	ADC_IN0
	13	AREF	-	AVDD
	14	+3V3	-	3.3V input/output
	15	D13	PB3	SPI1_SCK

1. Limitations on A4 and A5, D4 and D5 related to I^2C configuration are explained in *Section 6.10: Solder bridges* according to SB16/SB18 setting.
2. D5 PWM on inverted channel Timer 16.
3. D7/D8 shared with OSC_IN/OSC_OUT.
4. SPI_CS is made by GPIO.
5. A7 exclusive with VCP_TX.

Table 10. Arduino Nano connectors on NUCLEO-F303K8

Connector	Pin number	Pin name	STM32 pin	Function
Left connector				
CN3	1	D1	PA9	USART1_TX
	2	D0	PA10	USART1_RX
	3	RESET	NRST	RESET
	4	GND	-	Ground
	5	D2	PA12	-
	6	D3	PB0	TIM3_CH3
	7	D4(1)	PB7	-
	8	D5(1)	PB6	TIM16_CH1N(2)
	9	D6	PB1	TIM3_CH4
	10	D7(3)	PF0	-
	11	D8(3)	PF1	-
	12	D9	PA8	TIM1_CH1
	13	D10	PA11	SPI_CS(4) || TIM1_CH4
	14	D11	PB5	SPI1_MOSI || TIM17_CH1
	15	D12	PB4	SPI1_MISO
Right connector				
CN4	1	VIN	-	Power input
	2	GND	-	Ground
	3	RESET	NRST	RESET
	4	+5V	-	5V input/output
	5	A7	PA2	ADC1_IN3(5)
	6	A6	PA7	ADC2_IN4
	7	A5(1)	PA6	ADC2_IN3 || I2C1_SCL
	8	A4(1)	PA5	ADC2_IN2 || I2C1_SDA
	9	A3	PA4	ADC2_IN1
	10	A2	PA3	ADC1_IN4
	11	A1	PA1	ADC1_IN2
	12	A0	PA0	ADC1_IN1
	13	AREF	-	AVDD
	14	+3V3	-	3.3V input/output
	15	D13	PB3	SPI1_SCK

1. Limitations on A4 and A5, D4 and D5 related to I^2C configuration are explained in *Section 6.10: Solder bridges* according to SB16/SB18 setting.
2. D5 PWM on inverted channel Timer 16.
3. D7/D8 shared with OSC_IN/OSC_OUT.
4. SPI_CS is made by GPIO.
5. A7 exclusive with VCP_TX.

Table 11. Arduino Nano connectors on NUCLEO-L011K4

Connector	Pin number	Pin Name	STM32 pin	Function
Left connector				
CN3	1	D1	PA9	USART2_TX(1)
	2	D0	PA10	USART2_RX(1)
	3	RESET	NRST	RESET
	4	GND	-	Ground
	5	D2	PA12	-
	6	D3	PB0	TIM2_CH3(2)
	7	D4(3)	PB7	
	8	D5(3)	PB6	TIM2_CH3(2)
	9	D6	PB1	TIM2_CH4
	10	D7(4)	PC14	
	11	D8(4)	PC15	
	12	D9	PA8	TIM(5)
	13	D10	PA11	SPI_CS(6) || TIM(5)
	14	D11	PB5	SPI1_MOSI || TIM(5)
	15	D12	PB4	SPI1_MISO
Right connector				
CN4	1	VIN	-	Power input
	2	GND	-	Ground
	3	RESET	NRST	RESET
	4	+5V	-	5V input/output
	5	A7	PA2	ADC_IN2(7)
	6	A6	PA7	ADC_IN7
	7	A5(3)	PA6	ADC_IN6 || I2C1_SCL
	8	A4(3)	PA5	ADC_IN5 || I2C1_SDA
	9	A3	PA4	ADC_IN4
	10	A2	PA3	ADC_IN3
	11	A1	PA1	ADC_IN1
	12	A0	PA0	ADC_IN0
	13	AREF	-	AVDD
	14	+3V3	-	3.3V input/output
	15	D13	PB3	SPI1_SCK

1. Only one USART is available and it is shared between Arduino Nano and VCP. The selection is done by remapping (no hardware configuration to change).
2. D3 and D5 PWM are using same channel of TIM2_CH3.
3. Limitations on A4 and A5, D4 and D5 related to I^2C configuration are explained in *Section 6.10: Solder bridges* according to SB16/SB18 setting.
4. D7/D8 shared with OSC_IN/OSC_OUT.
5. No PWM on D9, D10, D11.
6. SPI_CS is made by GPIO.
7. PA2 exclusive with VCP_TX.

Table 12. Arduino Nano connectors on NUCLEO-L031K6

Connector	Pin number	Pin name	STM32 pin	Function
Left connector				
CN3	1	D1	PA9	USART2_TX(1)
	2	D0	PA10	USART2_RX(1)
	3	RESET	NRST	RESET
	4	GND	-	Ground
	5	D2	PA12	-
	6	D3	PB0	TIM2_CH3
	7	D4(2)	PB7	-
	8	D5(2)	PB6	TIM21_CH1
	9	D6	PB1	TIM2_CH4
	10	D7(3)	PC14	-
	11	D8(3)	PC15	-
	12	D9	PA8	TIM2_CH1
	13	D10	PA11	SPI_CS(4) || TIM21_CH2
	14	D11	PB5	SPI1_MOSI || TIM22_CH2
	15	D12	PB4	SPI1_MISO
Right connector				
CN4	1	VIN	-	Power input
	2	GND	-	Ground
	3	RESET	NRST	RESET
	4	+5V	-	5V input/output
	5	A7	PA2	ADC_IN2(5)
	6	A6	PA7	ADC_IN7
	7	A5(2)	PA6	ADC_IN6 || I2C1_SCL
	8	A4(2)	PA5	ADC_IN5 || I2C1_SDA
	9	A3	PA4	ADC_IN4
	10	A2	PA3	ADC_IN3
	11	A1	PA1	ADC_IN1
	12	A0	PA0	ADC_IN0
	13	AREF	-	AVDD
	14	+3V3	-	3.3V input/output
	15	D13	PB3	SPI1_SCK

1. Only one USART is available and it is shared between Arduino Nano and VCP. The selection is done by remapping (no hardware configuration to change).
2. Limitations on A4 and A5, D4 and D5 related to I^2C configuration are explained in *Section 6.10: Solder bridges* according to SB16/SB18 setting.
3. D7/D8 shared with OSC32_IN/OSC32_OUT.
4. SPI_CS is made by GPIO.
5. PA2 exclusive with VCP_TX.

Table 13. Arduino Nano connectors on NUCLEO-L432KC

Connector	Pin number	Pin name	STM32 pin	Function
Left connector				
CN3	1	D1	PA9	USART1_TX
	2	D0	PA10	USART1_RX
	3	RESET	NRST	RESET
	4	GND	-	Ground
	5	D2	PA12	-
	6	D3	PB0	TIM1_CH2N(1)
	7	D4(2)	PB7	
	8	D5(2)	PB6	TIM16_CH1N(1)
	9	D6	PB1	TIM1_CH3N(1)
	10	D7(3)	PC14	
	11	D8(3)	PC15	
	12	D9	PA8	TIM1_CH1
	13	D10	PA11	SPI_CS(4) || TIM1_CH4
	14	D11	PB5	SPI1_MOSI || TIM(5)
	15	D12	PB4	SPI1_MISO
Right connector				
CN4	1	VIN	-	Power input
	2	GND	-	Ground
	3	RESET	NRST	RESET
	4	+5V	-	5V input/output
	5	A7	PA2	ADC12_IN7(6)
	6	A6	PA7	ADC12_IN12
	7	A5(1)	PA6	ADC12_IN11 || I2C1_SCL
	8	A4(1)	PA5	ADC12_IN10 || I2C1_SDA
	9	A3	PA4	ADC12_IN9
	10	A2	PA3	ADC12_IN8
	11	A1	PA1	ADC12_IN6
	12	A0	PA0	ADC12_IN5
	13	AREF	-	AVDD
	14	+3V3	-	3.3V input/output
	15	D13	PB3	SPI1_SCK

1. D3, D5 and D6 PWM on inverted channel.
2. Limitations on A4 and A5, D4 and D5 related to I^2C configuration are explained in *Section 6.10: Solder bridges* according to SB16/SB18 setting.
3. D7/D8 shared with OSC32_IN/OSC32_OUT.
4. SPI_CS is made by GPIO.
5. No PWM on D11.
6. PA2 exclusive with VCP_TX.

Figure 7. NUCLEO-F031K6, NUCLEO-F042K6, NUCLEO-F303K8 pin assignment

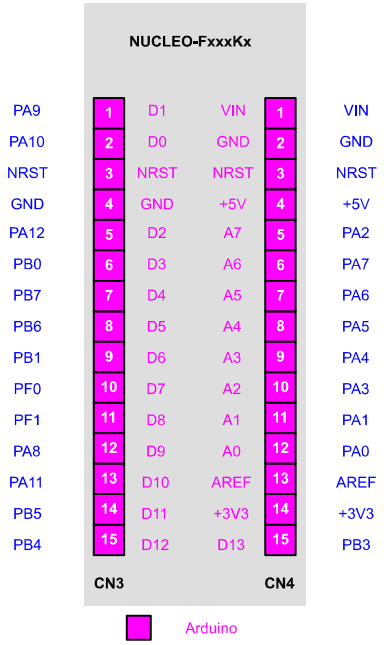

Figure 8. NUCLEO-L011K4, NUCLEO-L031K6 and NUCLEO-L432KC pin assignment

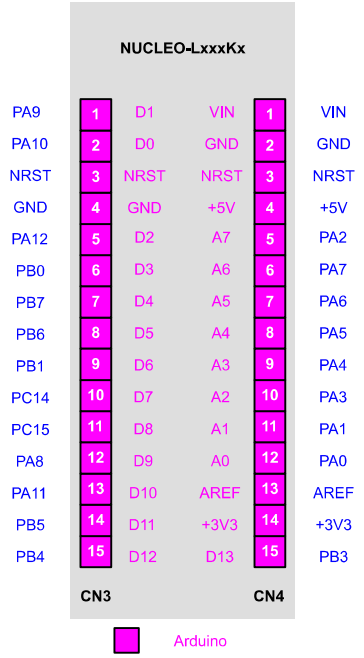

7 Electrical schematics

Figure 9. STM32 Nucleo-32 board (top view)

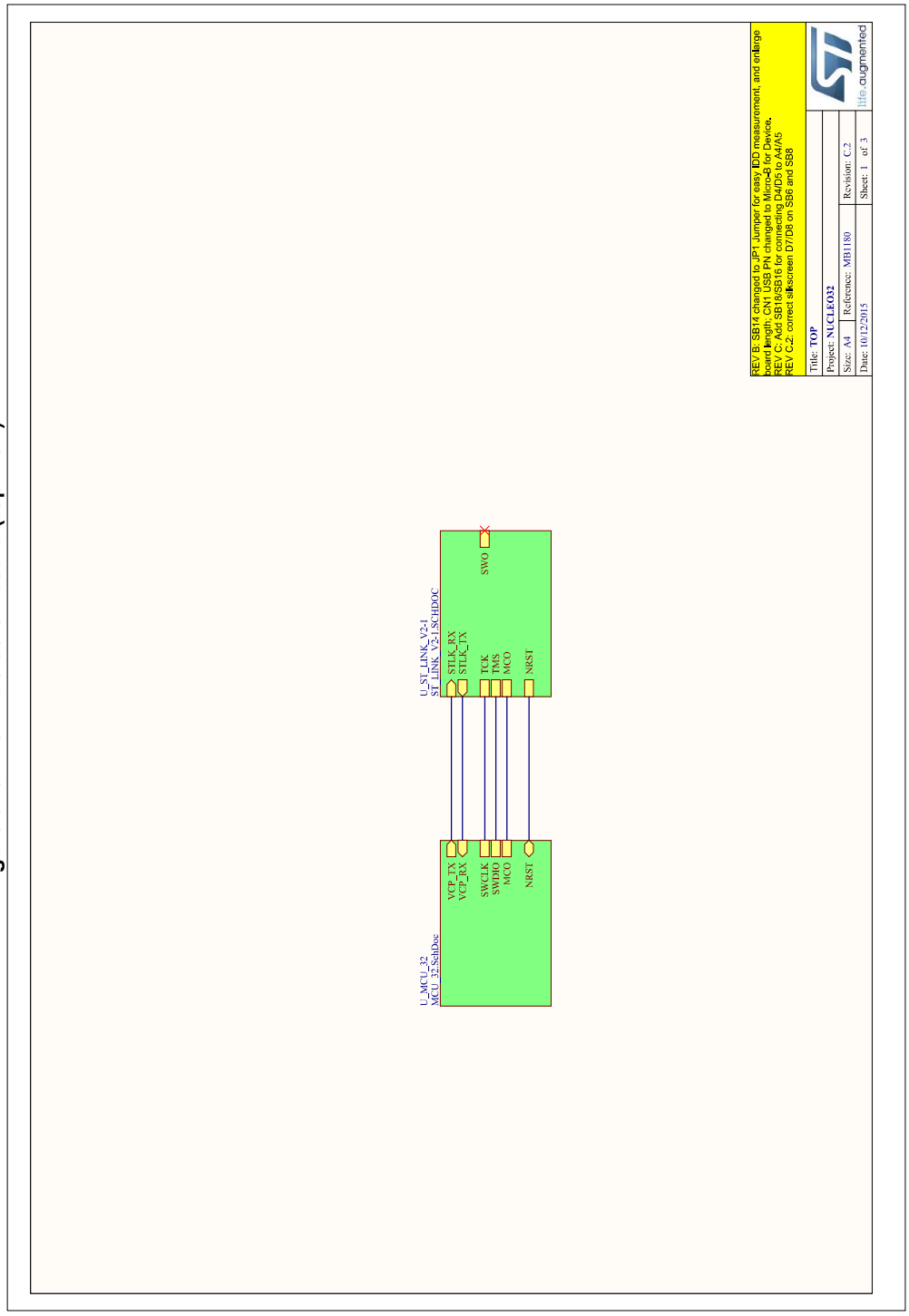

Figure 10. MCU

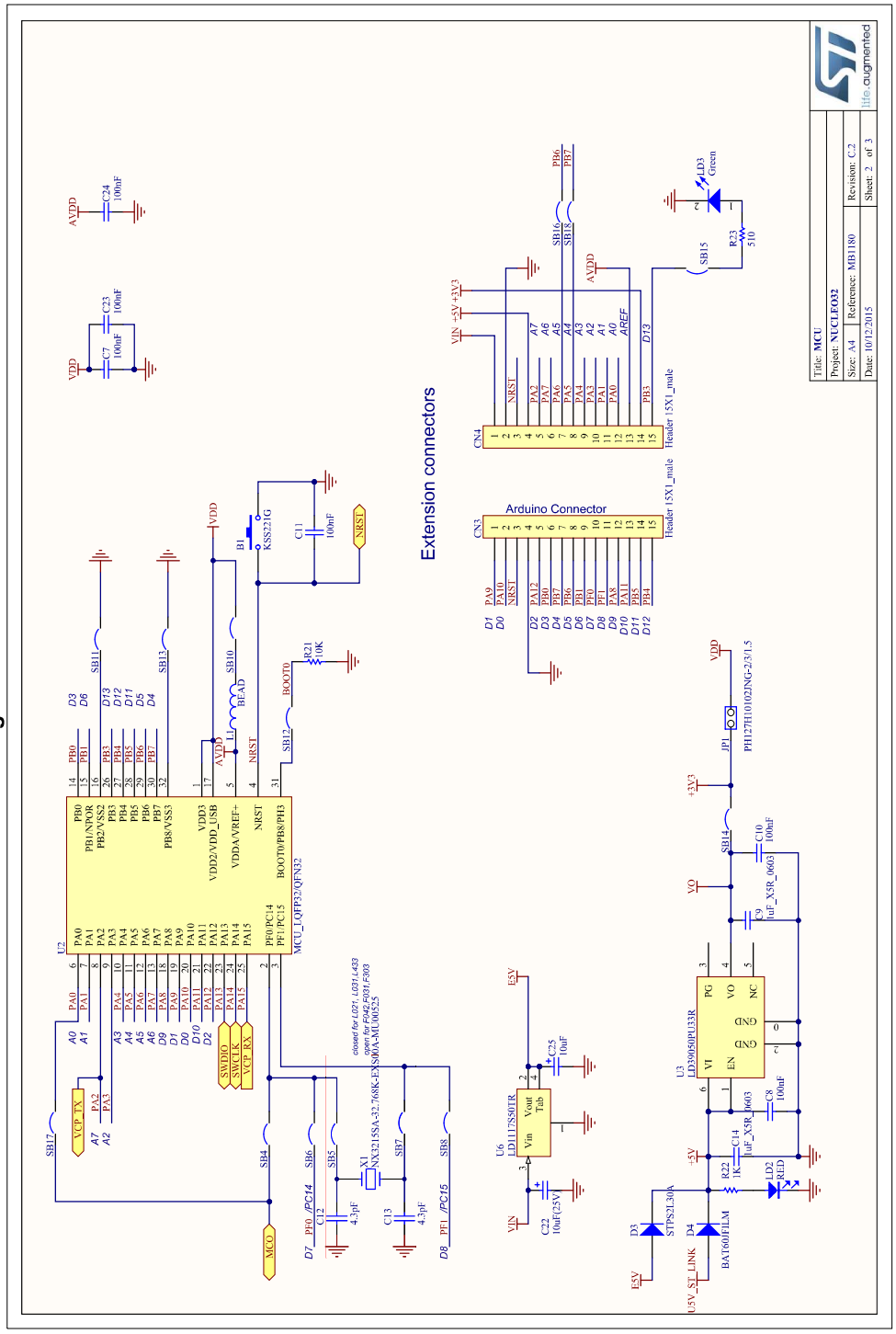

Figure 11. ST-LINK/V2-1

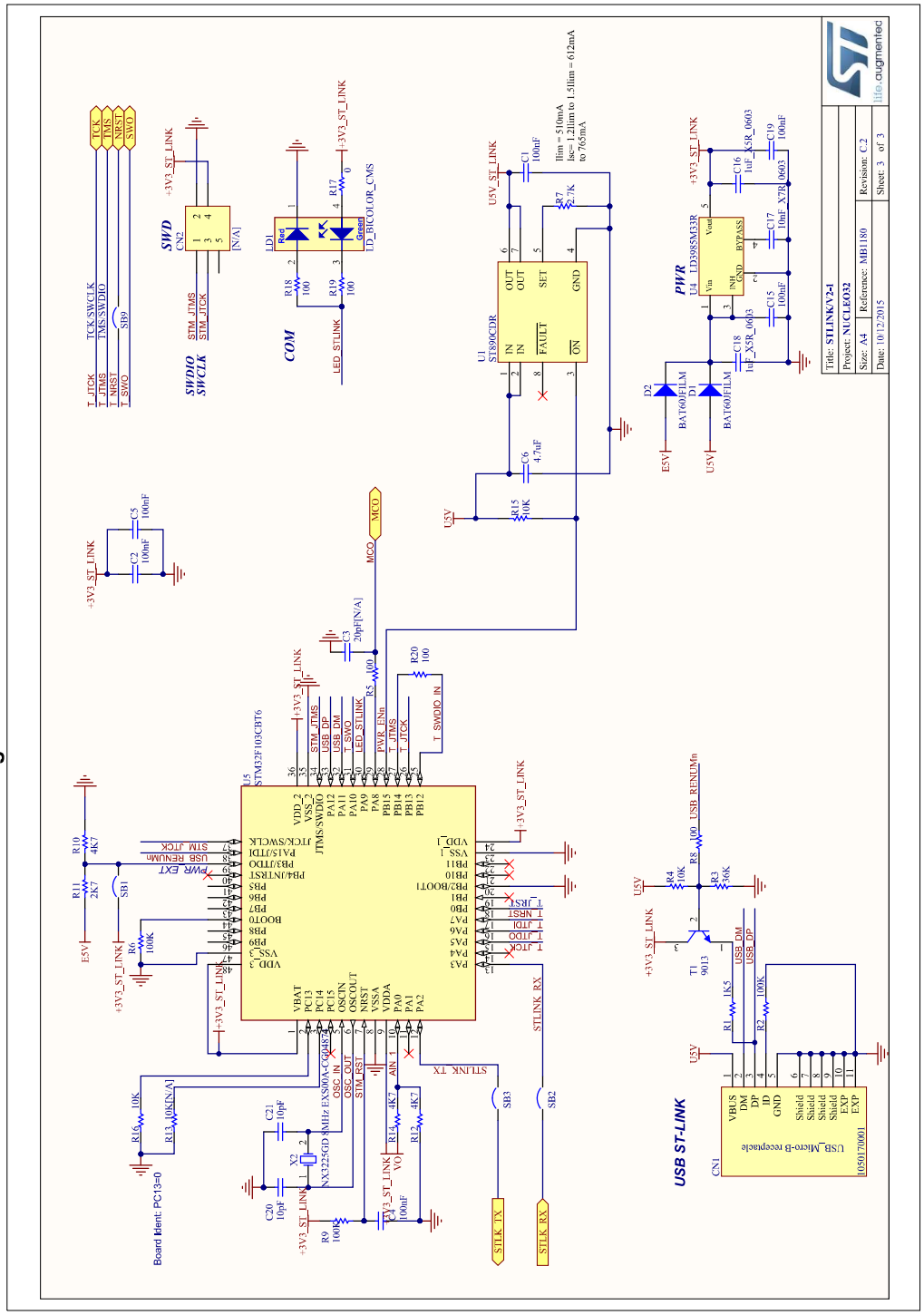

Appendix A Compliance statements

A.1 Federal Communications Commission (FCC) and Industry Canada (IC) Compliance Statements

A.1.1 FCC Compliance Statement

Part 15.1933

This device complies with Part 15 of the FCC Rules. Operation is subject to the following two conditions: (1) this device may not cause harmful interference, and (2) this device must accept any interference received, including interference that may cause undesired operation.

Part 15.105

This equipment has been tested and found to comply with the limits for a Class B digital device, pursuant to part 15 of the FCC Rules. These limits are designed to provide reasonable protection against harmful interference in a residential installation. This equipment generates uses and can radiate radio frequency energy and, if not installed and used in accordance with the instructions, may cause harmful interference to radio communications. However, there is no guarantee that interference will not occur in a particular installation. If this equipment does cause harmful interference to radio or television reception, which can be determined by turning the equipment off and on, the user is encouraged to try to correct the interference's by one or more of the following measures:

- Reorient or relocate the receiving antenna.
- Increase the separation between the equipment and the receiver.
- Connect the equipment into an outlet on a circuit different from that to which the receiver is connected.
- Consult the dealer or an experienced radio/TV technician for help.

Part 15.21

Any changes or modifications to this equipment not expressly approved by STMicroelectronics may cause harmful interference and void the user's authority to operate this equipment.

A.1.2 IC Compliance Statement

Compliance Statement

Industry Canada ICES-003 Compliance Label: CAN ICES-3 (B)/NMB-3(B).

Déclaration de conformité

Étiquette de conformité à la NMB-003 d'Industrie Canada : CAN ICES-3 (B)/NMB-3(B).

8 Revision history

Table 14. Document revision history

Date	Revision	Revision Details
14-Oct-2015	1	Initial version.
21-Mar-2016	2	Update to introduce NUCLEO-L011K4. Updated *Section : Introduction*, *Section 1: Features*,*Section 3: Ordering information*, *Section 6: Hardware layout and configuration*. Added *Section Appendix A: Compliance statements*.
30-Jun-2016	3	Updated *Section : Introduction*, *Section 3: Ordering information* and *Table 13: Arduino Nano connectors on NUCLEO-L432KC* to add NUCLEO-L432KC.

IMPORTANT NOTICE – PLEASE READ CAREFULLY

STMicroelectronics NV and its subsidiaries (“ST”) reserve the right to make changes, corrections, enhancements, modifications, and improvements to ST products and/or to this document at any time without notice. Purchasers should obtain the latest relevant information on ST products before placing orders. ST products are sold pursuant to ST’s terms and conditions of sale in place at the time of order acknowledgement.

Purchasers are solely responsible for the choice, selection, and use of ST products and ST assumes no liability for application assistance or the design of Purchasers’ products.

No license, express or implied, to any intellectual property right is granted by ST herein.

Resale of ST products with provisions different from the information set forth herein shall void any warranty granted by ST for such product.

ST and the ST logo are trademarks of ST. All other product or service names are the property of their respective owners.

Information in this document supersedes and replaces information previously supplied in any prior versions of this document.

© 2016 STMicroelectronics – All rights reserved