Design and Implementation of an International Digital Terrestrial TV Receiver using an FPGA

M.S. Project Feasibility Analysis

Vahe Robert Jabagchourian
ECE 699C – Independent Study
Professor Ronald Mehler

November 24, 2008

CALIFORNIA STATE UNIVERSITY, NORTHRIDGE
DEPARTMENT OF ELECTRICAL AND COMPUTER ENGINEERING

Table of Contents

1. Project Objective 3
   1.1 Digital TV Background 4
   1.2 Benefits of Digital TV 4
   1.3 Software Defined Radio 5
   1.4 Project Breakdown 7
2. Terrestiral (Over the Air) Modulation Methods 10
   2.1 Fundamentals of Amplitude Modulation 10
   2.2 8-VSB Modulation 10
   2.3 Frequency Division Multiplexing 11
   2.4 Orthagonal Frequency Division Multiplexing 12
   2.5 Quadrature Amplitude Modulation 13
3. Chraracteristics of 4 Different Standards 14
   3.1 Advanced Television Standards Comittee 14
   3.2 Digital Video Broadcasting - Terrestrial 18
   3.3 Integrated Services Digital Broadcasting - Terrestrial 19
   3.4 Digital Media Broadcasting - Terrestiral 20
4. Compatibility of the Standards 21
   4.1 Input Frequencies 22
   4.2 Demodulation Methods 24
   4.3 Error Correction Methods 26
   4.4 Source Coding 27
   4.5 Summary 39
5. Summary 31
6. Conclusion 32

1. Project Objective

The purpose of this project is to design, test and implement a Digital TV receiver that can receive standards from across the world using software defined routines and an FPGA (Field Programmable Gate Array). Throughout this document we will study the feasibility of implementing a Digital Terrestrial Television (DTTV) receiver module using a Field Programmable Gate Array, and a front end Analog to Digital Converter (ADC) to directly quantize the Radio Frequency (RF) signal and analog front end components for signal acquisition.

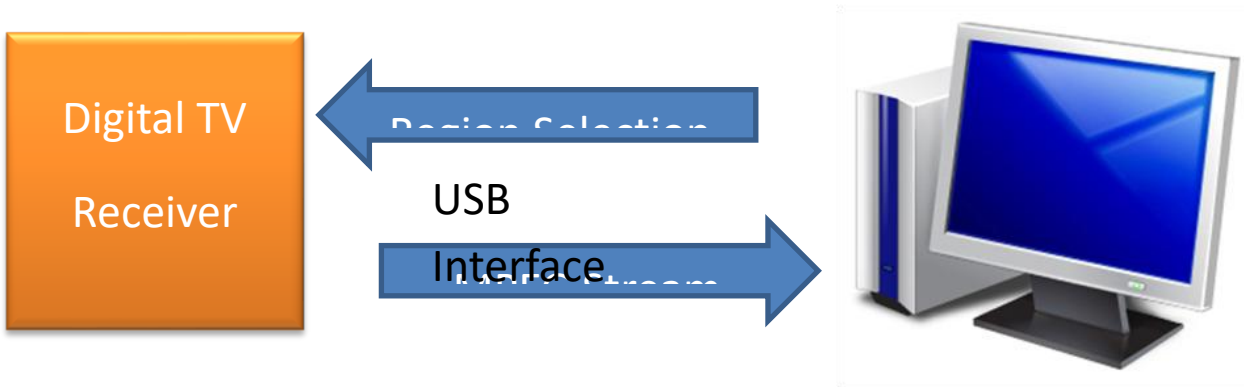

Figure 1.1 – Overview of Digital TV Receiver, USB Interface and Host PC

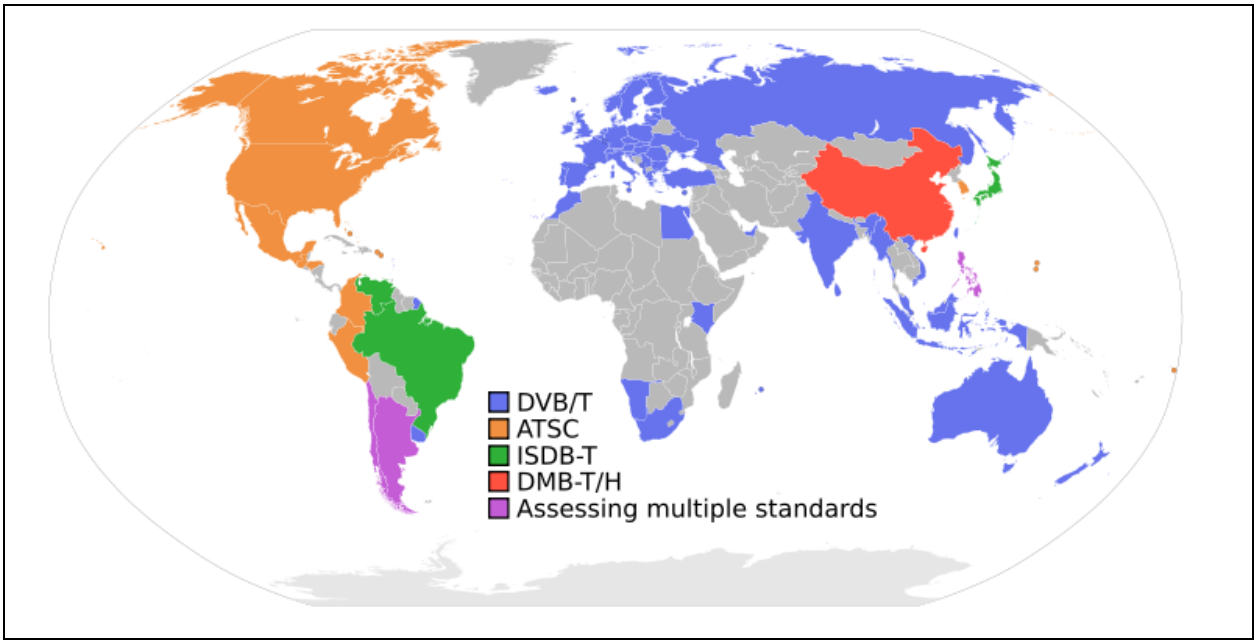

Figure 1.2 – Global Coverage of Digital Terrestrial TV Standards

1.1 Digital TV Background

Digital TV is a TV standard that allows transmission and reception of moving images (specifically MPEG Streams) digitally (in a binary number system). Though the actual Radio Frequency signals may be in analog format, the data that is in those analog signals is interpreted in a digital representation. Digital TV is more flexible and efficient than analog television. The primary difference between digital and analog TV is that digital TV is capable of producing higher quality images, sound and provides more programming choices than analog TV.

1.2 Benefits of Digital TV

A. The main reason that terrestrial TV will transition to digital is that the frequencies allocated for certain analog channels need to be reallocated for other public services such as wireless, and police and firefighting communications.

B. Many TV stations are spending money transmitting to consumers both in an analog format and digital, that is until February 19, 2009 when all analog transmission in the US will switch to digital (Over the Airways).

C. Digital is much less susceptible to noise and can provide a near perfect reproduction of the source image at a far greater image quality. Consumers need to be aware that the main requirement of this new standard is having the appropriate hardware to receive the signal. This means that either a Digital TV is needed, or a Digital to Analog Converter Box is needed to interface to older television boxes.

D. Digital spectrum is far more efficient in its usage as seen in the following comparison charts.

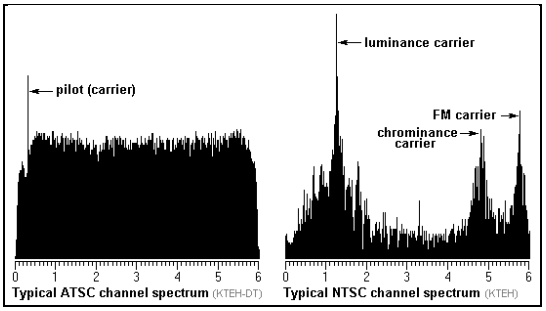

Figure 1.3 – ATSC and NTSC Channel Spectrum Comparison

1.3 Software Defined Radio

Software Defined Radio is a Radio System that implements most of the functions traditionally realized through hardware in software. Mixers, filters, modulators are implemented using FPGA devices where as traditional devices use physical components that are fixed. The major device in SDR is the analog to digital converter which is placed close enough to the receiver antenna so that the majority of the software can be put right after the A/D conversion. True SDR is difficult to realize due to current technological limits.

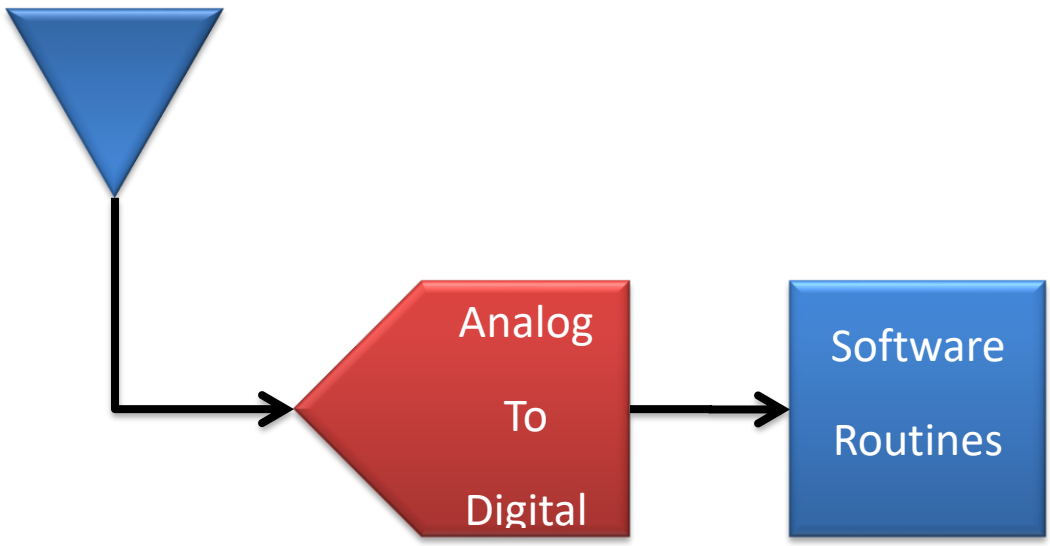

Figure 1.4 – True Software Defined Radio Block Diagram

Software Defined Radio (SDR) is a radio communication system which can tune to any frequency band (with infinite Bandwidth) and receive any modulation across a large frequency spectrum by using the same hardware as possible and process the signals through software (Tuğcu). This allows an end user to be able to tune to many stations across different wireless protocols and frequencies using a single terminal. Traditional hardware components such as ADC's filters, demodulators can be realized in software. In practice, order to process signals rapidly, software defined radio's need to have a DSP (digital signal processor) or FGPA (Field Programmable Gate Array) component.

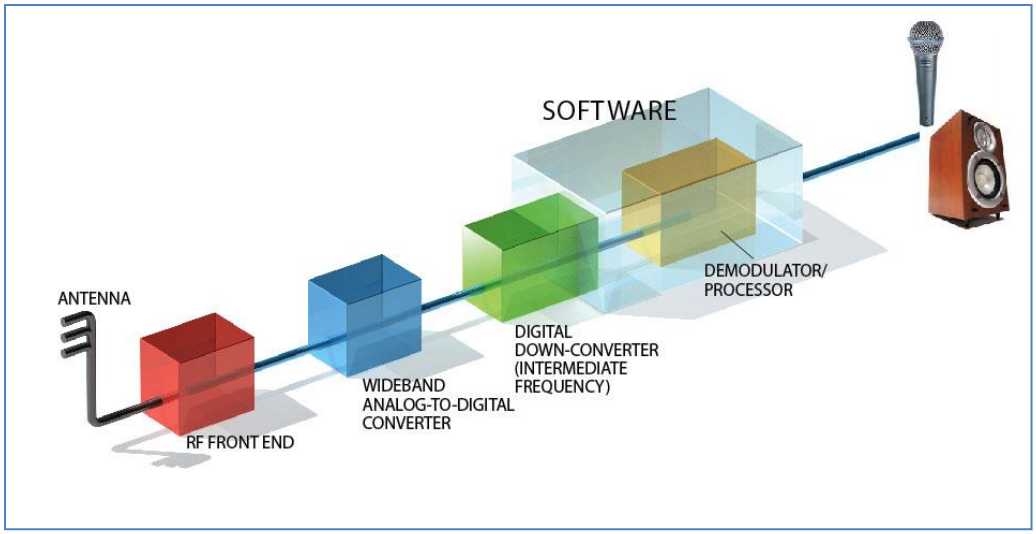

Figure 1.5 – SDR infrastructure (Tuğcu)

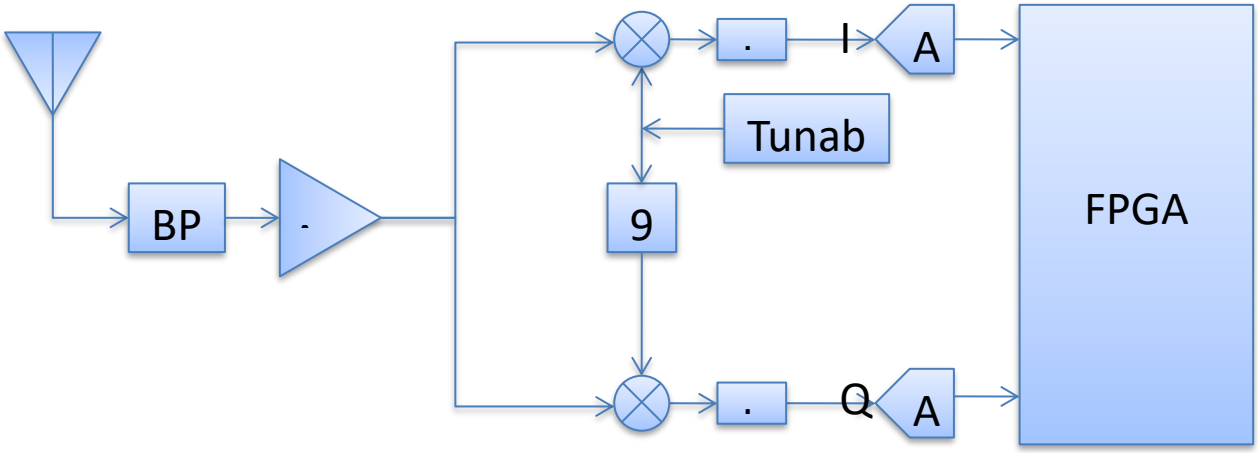

Figure 1.6 – Simplified Block Diagram of a Front End DTV Receiver

1.4 Project Breakdown

A. RF Front End

Digital TV is transmitted between 470 MHz – 770MHz in Ultra High Frequency (UHF) across the world. In order to build the project, either purchase or fabricate a front end digitally tunable bandpass filter that can adjust to changing ranges of frequency. The purpose of the Band Pass Filter will be to remove any unwanted frequencies coming into the antenna so that we will not have any interference. Since the frequencies are fairly similar consistent across the world, tuning the filter will most likely not be necessary. The next step would be to add a variable gain amplifier with automatic gain control to stabilize the output of the amplifier. Both the Bandpass Filter (BPF) and Variable Gain Amplifier (VGA) will be digitally controlled from the FGPA board with digital control signals.

B. Analog to Digital Conversion

To realize true Software Defined Radio place an Analog to Digital Converter right next to the antenna. In practice this is not feasible and therefore it is common to place the ADC after BPF and VGA. The fastest ADC's are around 3Gsps (Gigasamples / Second) and the lower end solutions go from 1.5 Gsps to 2.2 Gsps. Nyquist Criteria requires an electronic circuit sample the signal at or more than 2 times the highest frequency coming into the input (~800MHz). This would put the requirement of the ADC at about 1.6-2.0Gsps sampling rate. It is readily apparent that the ADC will be very costly as it is placed closer to the antenna because it needs to satisfy the Nyquist criteria. To reduce cost, use an analog mixer that beats with a tuned local oscillator to produce sum and difference frequencies. Low pass filter the difference frequency in order to recover the intermediate frequency. Pass the intermediate frequency through an analog to digital converter which samples at two times the intermediate frequency. The resulting digital signal is ready for the FPGA and Computer for final processing.

C. Digital Down Conversion

A major step will be to programming the FPGA to digitally down-convert, decimate, and filter the digital signal for further processing. Decide if the FPGA will need to demodulate each standard or if the computer software will be responsible for the signal processing. If the computer software will recover the original signal then the FPGA will send USB information to the computer.

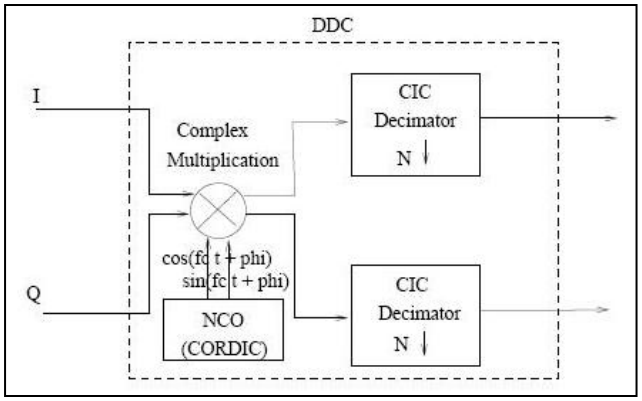

Figure 1.7 – Digital Down-Converter Block

D. Demodulation

Each standard has its own specific type of modulation scheme. ATSC uses a single carrier for broadcast, while other standards rely upon multiple carriers (multiplexing). In addition, each standard is modulated differently and consequently is demodulated differently. The demodulator is the first block that will be specific to each region. The specific types of demodulation are presented in figure 1.8 and will be discussed in greater detail in the compatibility section.

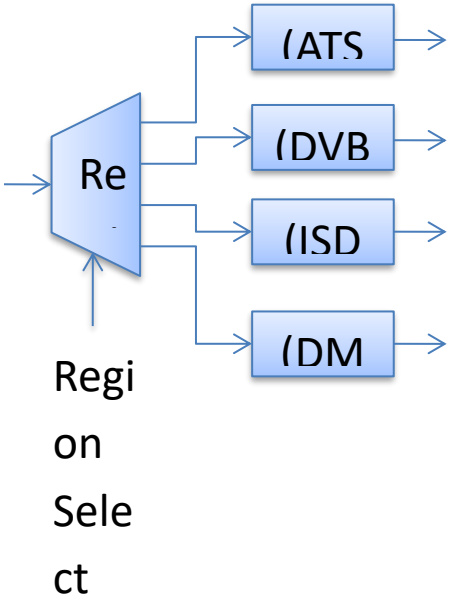

Figure 1.8 – Region Specific Demodulator Block

E. Error Correction

Error correction for each standard will consist of a two stage block. In ATSC the Trellis Decoder is followed by a Reed Solomon Deocder. In DVB-T the error correction is a convolutional decoder followed by a Reed Solomon Decoder. ISDB-T contains a Trellis Decoder Followed by Reed Solomon Decoder. Finally DMB-T contains a convolutional decoder followed by a BCH decoder.

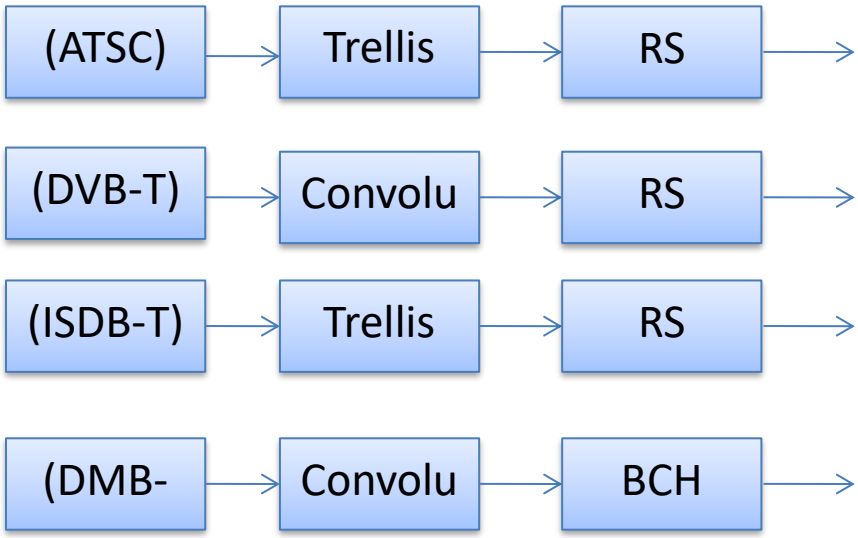

Figure 1.9 – Region Specific Error Correction Blocks

2 Terrestrial (Over the Air) Modulation Methods

Terrestrial modulation encapsulates three types of modulation on a carrier. The three types of modulation on a carrier are the amplitude, frequency and phase. Amplitude Modulation operates on the amplitude portion of the carrier where as Frequency Modulation operates on the frequency component of the carrier. Frequency Shift Keying is a binary modulation method that also varies the frequency of the carrier. Finally, Quadrature (the 90 Degree offset) Amplitude Modulation is a combination of Amplitude and Phase. Quadrature Phase Shift Keying operates on the phase of the carrier. This section discusses the different types of modulation that pertain to Digital TV.

2.1 Fundamentals of Amplitude Modulation

According to Wikipedia "modulation is the process of varying a periodic waveform, i.e. a tone, in order to use that signal to convey a message, in a similar fashion as a musician may modulate the tone from a musical instrument". Normally a high-frequency sinusoid waveform is used as carrier signal. Carrier amplitude, frequency, and phase variations are the main parameters varied to produce a modulated signal.

The simplest type of Modulation is Amplitude Modulation where a carrier varies its amplitude though modulation with an information bearing signal. In the North American region the standard that has been adopted for digital terrestrial transmission of TV signals is called ATSC (Advanced Television Standards Committee) which uses a form of Amplitude Modulation called Vestigial Sideband Modulation. Vestigial Sideband modulation is quite similar to Single Sideband Transmission but differs in that a Vestige (small portion) is left on the remaining lower side band and the upper side band is left unaltered. The way that vestigial sideband modulation works is that the vestigial sideband which originally contained sideband information is filtered out by a shaping filter and the other sideband contains everything needed to transmit the information.

Before we will explore the intricacies of 8 Level VSB we will first briefly introduce the concept of conventional amplitude modulation. In Amplitude modulation the modulating wave (information bearing signal) whose amplitude varies in accordance with the information in the signal is modulated (multiplied)

upon the higher frequency carrier generating an AM wave. The below picture shows the diagram of a carrier which has been modulated by a wave to produce an AM signal.

2.2 8-VSB (8-Level Vestigial Side Band Modulation)

VSB is similar to Single Side Band Modulation but retains a small portion (vestige) of the undesired sideband to reduce DC distortion. VSB signals are generated using a standard AM or DSBSC then passing the modulated signal through a sideband shaping filter. Demodulation can be achieved through a standard AM demodulator, DSBSC demodulator, or In-Phase Synchronous Detector (Gray).

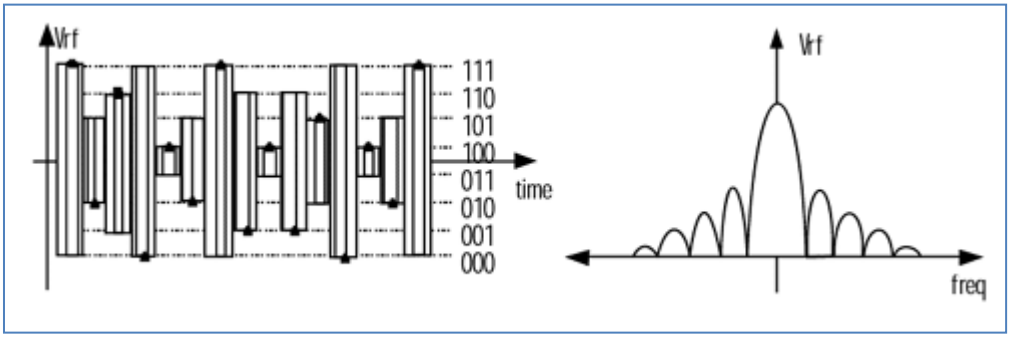

Figure 2.1 – 8VSB Signal in the Frequency and time Domain

In order to be able to recover the 8VSB baseband signal one must use a synchronous detector that is in-phase with the signal. Since there is no phase shifted component then there is no need for a quadrature channel detector. This makes the receiver much simpler and simplifies the process of processing the digital signals and reduces cost tremendously (Miller).

2.3 Frequency Division Multiplexing

Also known as FDM, Frequency Division Multiplexing is a form of multiplexing where multiple baseband signals are modulated on different frequency carrier waves and added together to create a composite signal. The carrier signals are called sub carriers. FDM means that the entire system bandwidth is divided into a series of adjacent frequency bands each transmitting some piece of information.

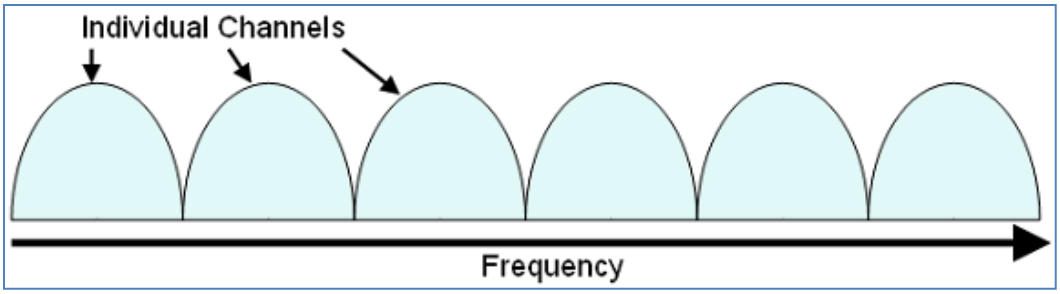

Figure 2.2 – Frequency Division Multiplexing Bandwidth

2.4 Orthogonal Frequency Division Multiplexing

Orthogonal Frequency Division Multiplexing is a special type of Frequency Division Multiplexing suited for a large number of carriers. In practice, having a large number of carriers in the system is very problematic. However, if the carrier spacing is done evenly at the period over which the receiver integrated the demodulated signal then the carriers form an orthogonal set (Barnes). In short there is a benefit of orthagonality and that is that when a carrier is multiplied by itself (same frequency) in that the resulting signal goes to zero in frequency. To avoid what is called ISI (inter symbol interference), or ICI (inter carrier interference) the transmitter must ensure to have what is called an interval (or a guard interval) carriers to prevent unwanted interference.

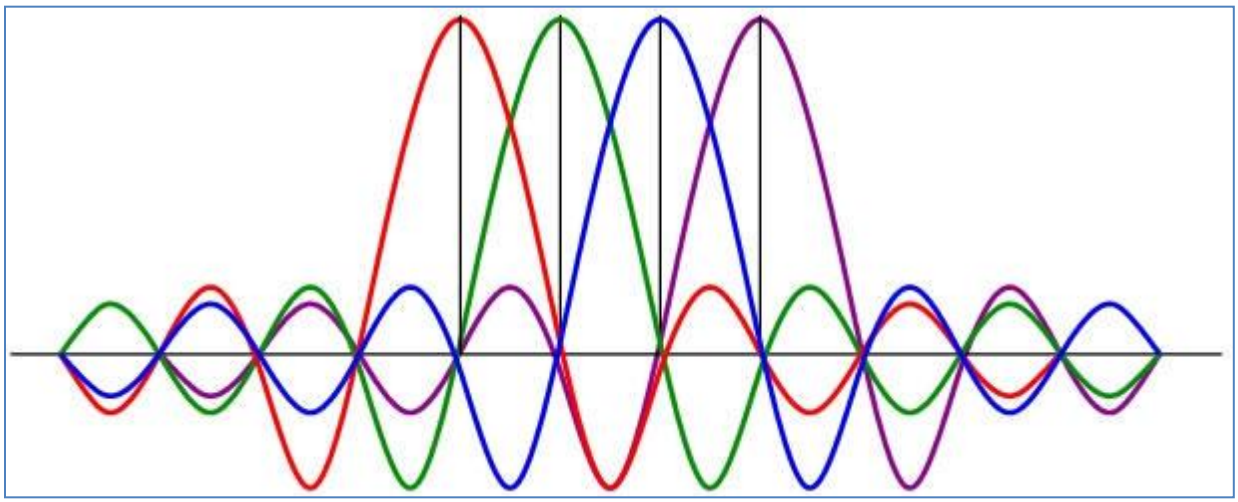

Figure 2.3 – OFDM Subcarriers

2.5 Quadrature Amplitude Modulation

Quadrature amplitude modulation describes means of encoding the amplitude variations digitally of phase shifted sinusoidal waves. In communications, especially digital communications it common to use a constellation diagram to depict the binary codes for certain amplitude variations for in phase and quardature modulated signals. In the UK, 16-QAM and 64-QAM are currently used for digital terrestrial television.

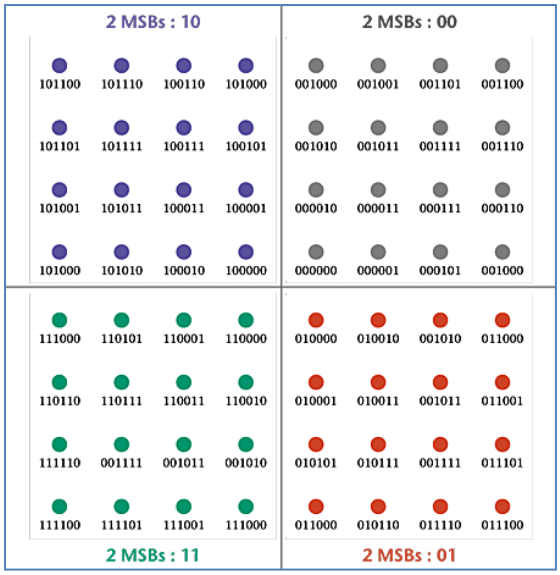

Figure 2.4 - 64-QAM Constellation Diagram

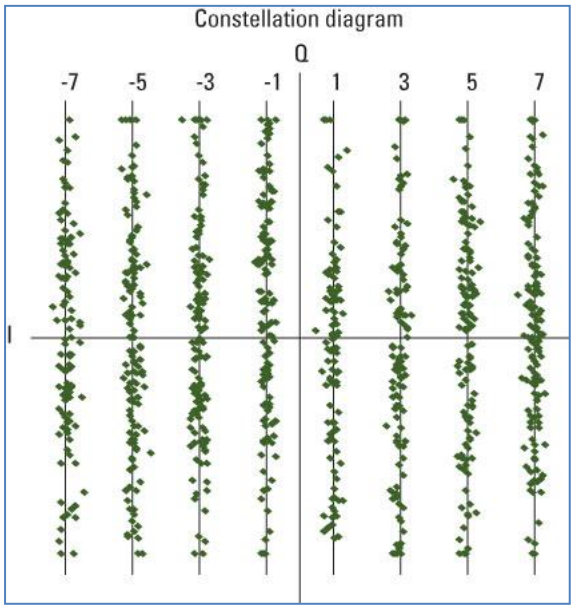

Figure 2.5- 8-VSB Constellation Diagram

3 Characteristics of the 4 Different Standards

In the following section we will present the reader with a background on each of the 4 standards for digital television. The first standard that will be presented is the ATSC standard which has been adopted for use in North America. The second standard that has been adopted is the DVB-T standard which is short for Digital Video Broadcast – Terrestrial. This format has been tested for use in Europe. The final two standards that we will cover are the ISDB-T in Japan and the DMB-T standard in China. ISDB-T stands for Integrated Services Digital Broadcasting - Terrestrial and DMB – T stands for Digital Media Broadcasting –Terrestrial.

3.1 Advanced Television Standards Committee

In North America, Digital TV is transmitted using an 8-VSB modulated signal which, as mentioned previously, is a type of Amplitude Modulation that has 8 levels. The 8 levels correspond to binary codes of 3 bits which allow for a range of 8 digital levels. The 3 bits are then translated to a level consistent with the binary code and then amplitude modulated to form the RF signal. After modulation the signal is then taken though an RF up converter and sent off to the digital receivers. ATSC documents a digital television format which will replace the analog NTSC television next year. The high definition television standards defined by the ATSC produce wide screen 16:9 images up to 1920×1080 pixels in size — more than six times the display resolution of the earlier standard. However, a host of different image sizes are also supported, so that up to six standard-definition "virtual channels" can be broadcast on a single 6 MHz TV channel

Eight-VSB is the way that the digital data is sent to the television antenna receivers. Before this data is sent it must originate as a data stream. In fact, it originates as an MPEG-2 data stream which is then wrapped in between synchronizer bytes in order for the detector to link up in sync with the incoming data. The data is then randomized to spread out the data steam using a pseudo random number generator. A block diagram of the transmitter portion of ATSC is shown below.

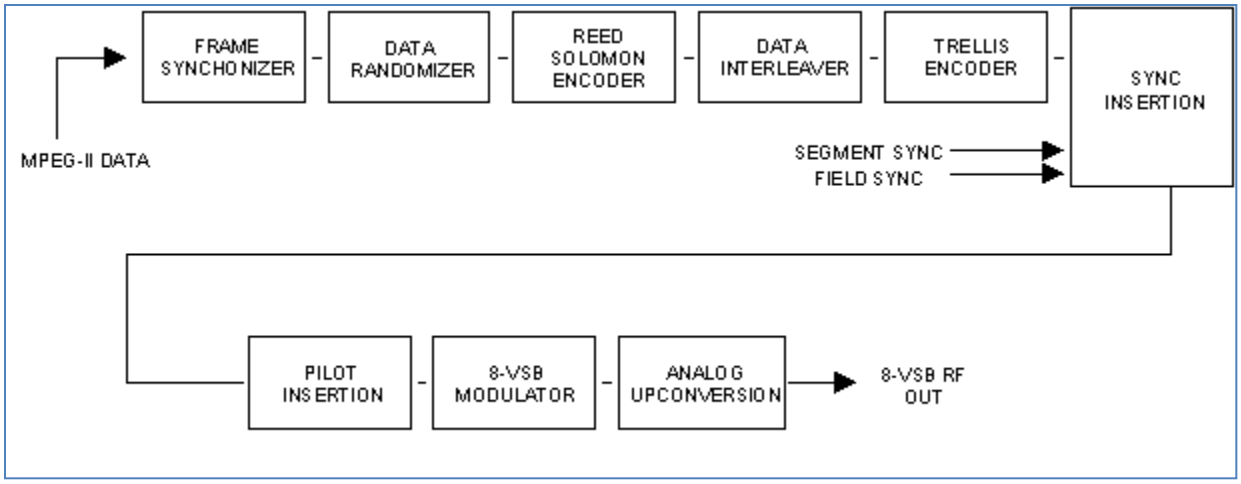

Figure 3.1 – 8VSB Transmitter Block Diagram (Sparano)

The Frame Synchronizer allows for the equipment to synchronize with the data steam coming in from the media storage or any video acquisition device. The main part to note is where the data processing ends and the RF processing begins. The sync insertion point provides a helper signal for the receiver to decode and successfully detect errors for the incoming data stream. The pilot insertion 8-vsb modulator and analog up-converter provide for the RF processing portion of the transmission.

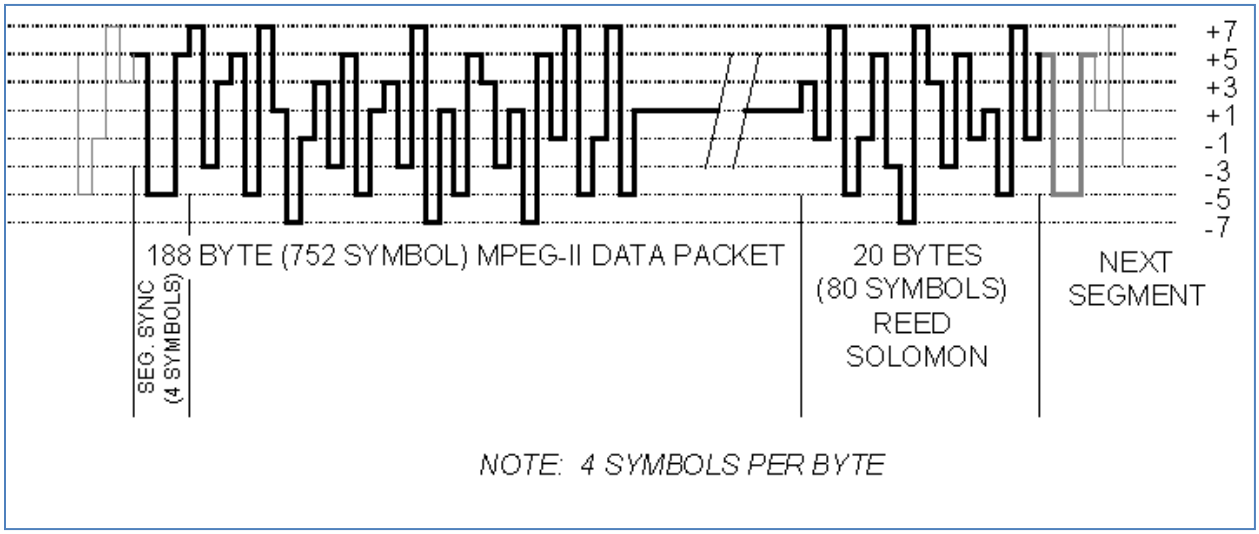

Figure 3.2 – ATSC Baseband Data Segment (Sparano)

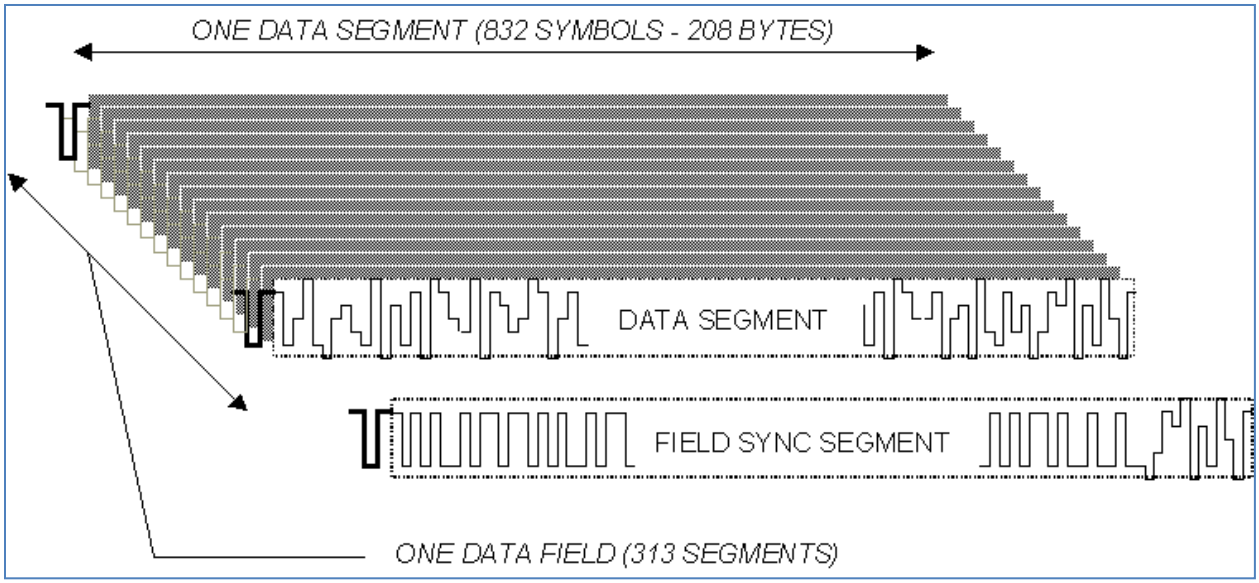

Figure 3.3 – ATSC Baseband Data Field (Sparano)

Amplitude Modulating the ATSC baseband signal produces significant number of sidebands and the purpose of the 8-VSB Nyquist Filter is to filter out only the significant portion 6MHz and the result of this filtering will produce a smoother envelope for the resulting wave and limit the spectrum produced by the envelope.

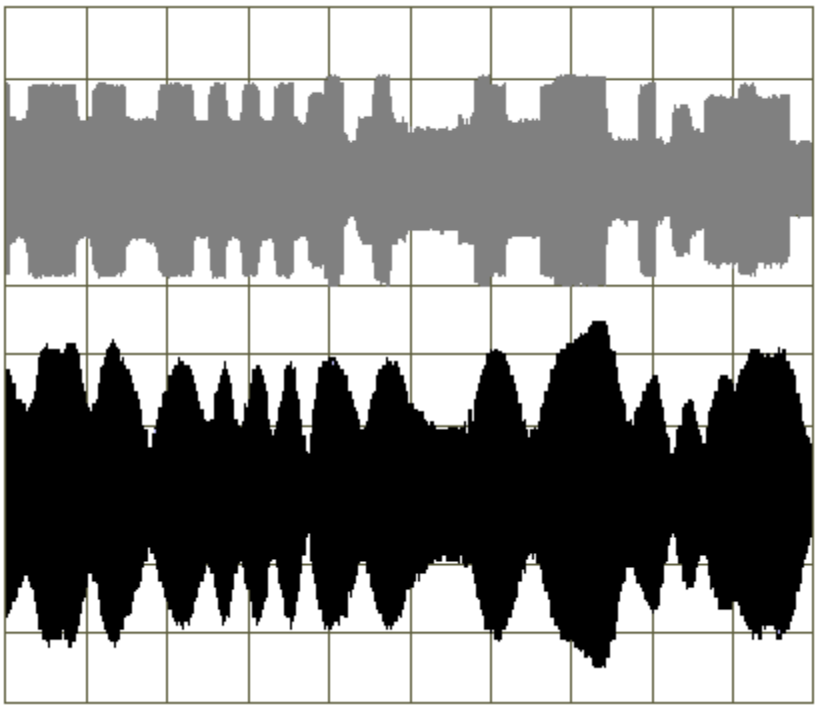

Figure 3.4 – Nyquist Filter applied to the Baseband Signal (Sparano)

Our portion of the project will be focused on implementing the receiver for each standard. We start with the diagram of the ATSC receiver system which consists of a down converter, demodulator, error correction, de-randomizer and transport stream decoder.

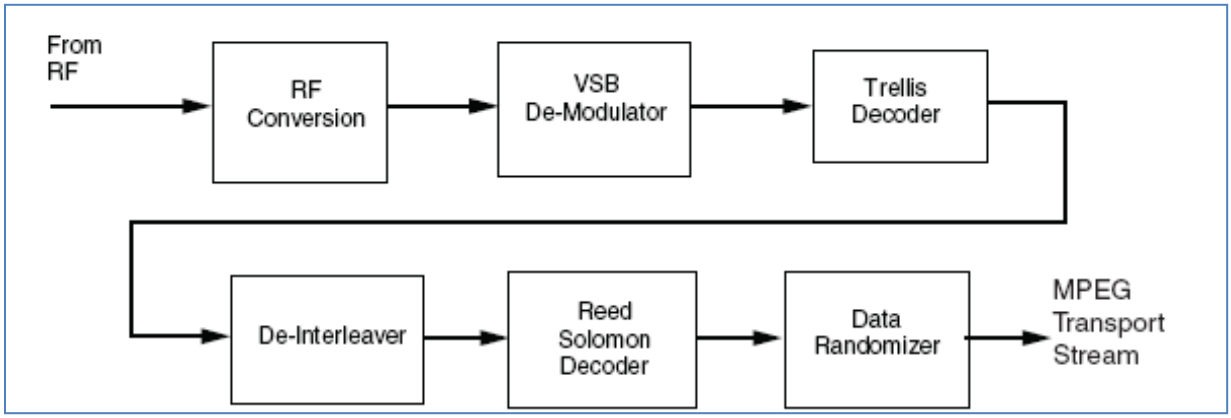

Figure 3.5 – ATSC Receiver Block Diagram (Francis, Green)

3.2 Digital Video Broadcasting – Terrestrial

The standard in Europe is called DVB-T. In the transmitter there are several functional components but as with 8VSB the transmission media has to undergo coding and modulation. It originates as an MPEG-2 stream. Before the base band signal can be transmitted, it has to undergo channel coding and modulation. A forward error correction (FEC) is required which enables the receiver to correct errors that have occurred as a result of noise and other disturbances in the transmission path. Furthermore, a synchronization method has to be provided.

The data at the baseband interface is combined with the bit stream of a pseudorandom noise generator which is implemented by a feedback shift register in order to flatten the power density spectrum. Only the sync byte of the TS packets is left untouched in order to retain a means for synchronization. The pseudorandom noise generator is reinitialized with a predetermined bit pattern every eighth TS packet. Decoders are informed about the starting point of the sequence by means of an inverted sync byte (Ladebusch).

A choice can be made between the modulation techniques QPSK, 16-QAM and 64-QAM and in addition the DVB-T system offers the possibility of hierarchical modulation. This means that two independent data streams can be transmitted in the same signal using different modulation techniques (QPSK, 16-QAM) for example.

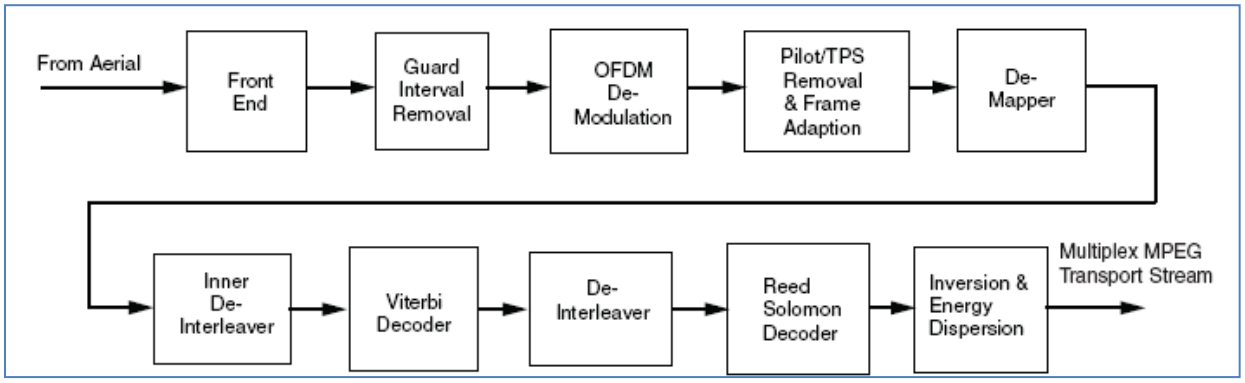

Figure 3.6 – DVB-T Receiver Block Diagram (Francis, Green)

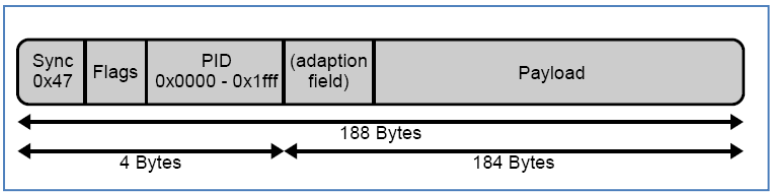

Figure 3.7 – DVB-T Transport Stream Packet Header

3.3 Integrated Services Digital Broadcasting - Terrestrial

ISDB (Integrated Services Digital Broadcasting) is the standard in Japan. It is important to note that the MPEG-2 interface means the input signals to the system and output signals from the system conform to the MPEG-2 Transport Stream specifications. In addition to the MPEG-2 Transport Stream specifications there is a use of flexible modulation streams in which contents can be integrated simultaneously within an ISDB stream. There is also a control signal that allows the receiver to perform multiplexing and modulation.

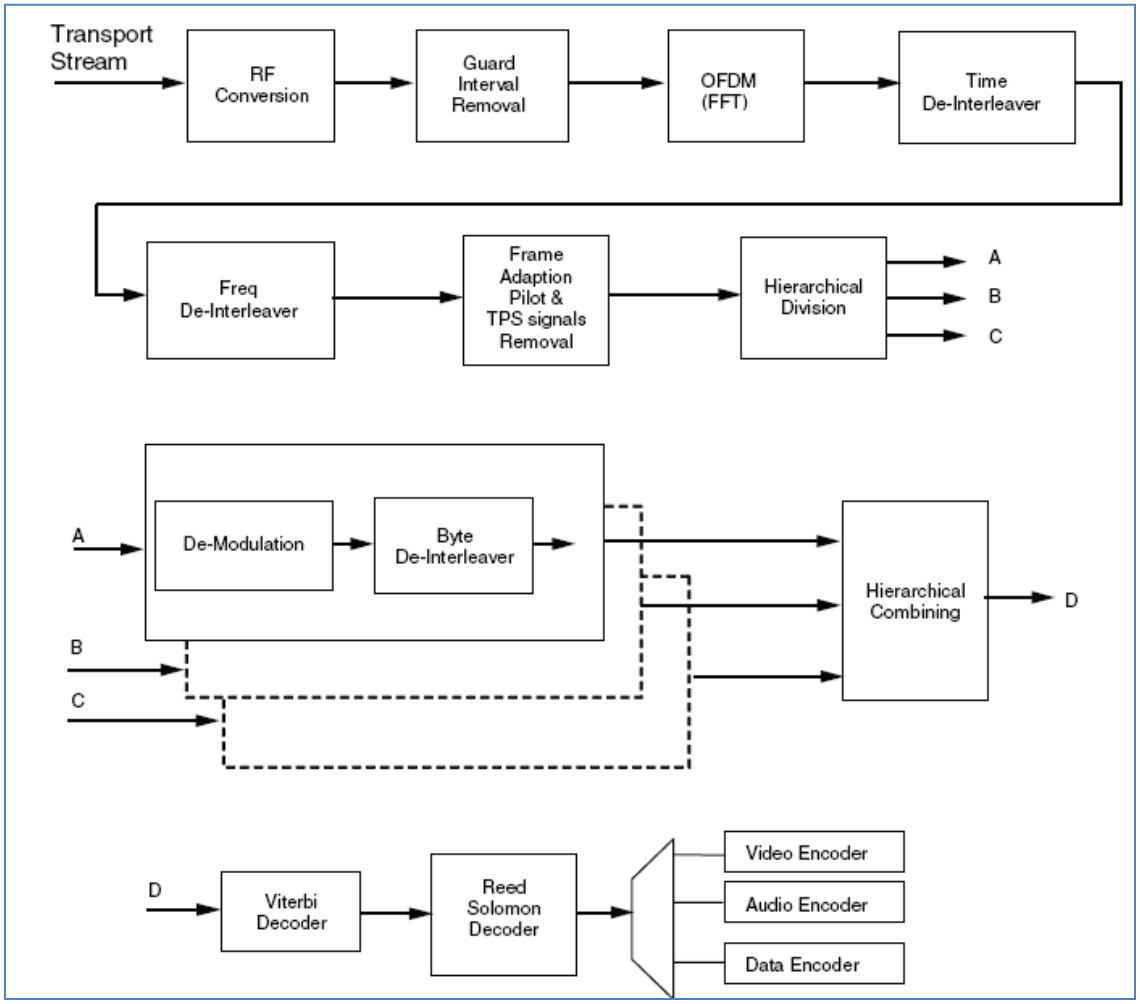

Figure 3.8 – ISDB-T Receiver Block Diagram (Francis, Green)

3.4 Digital Media Broadcasting – Terrestrial

The standard is being officially called Digital Terrestrial Multimedia Broadcast (abbreviated as DTMB. The data transmission used is called TDS-OFDM (Time Domain Synchronous-Orthogonal frequency-division multiplexing), which mainly is a multiple-carrier modulation technology, supporting both single-carrier and dual-carrier modulation schemes. Drawbacks of this standard include the fact that TV programs bought from overseas which are broadcast in digital TV format may have to do a signal conversion that suits the DTMB environment, as the DTMB standard is slightly different than the original DVB-T and ATSC standards.

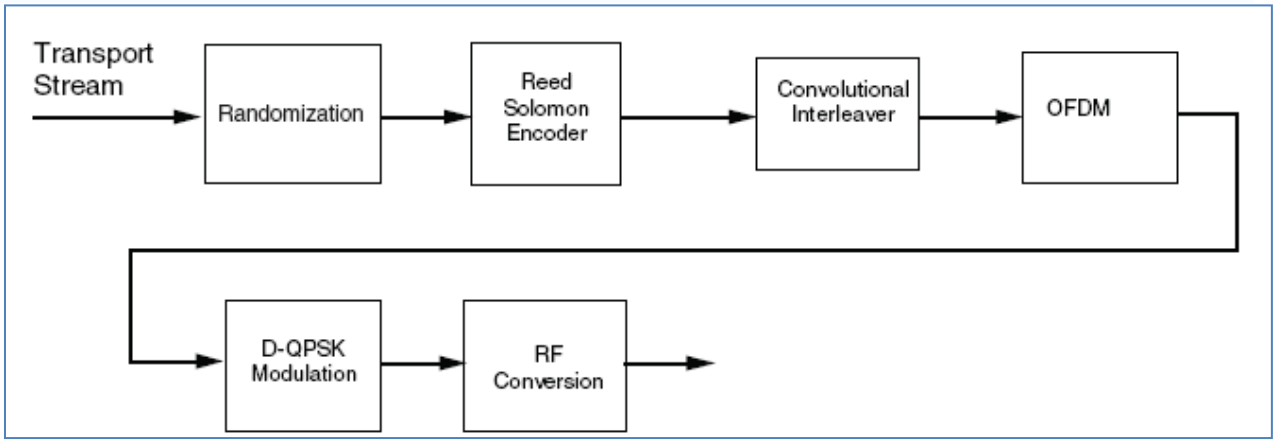

Figure 3.9 - DMB-T Receiver (Francis)

4 Compatibility of the Standards

From initial analysis there is a tremendous difference from North America as compared to the modulation standards of Japan, China and Europe. The main difference is that in both North America there is a difference in the number of carriers used for modulation. It is not out of convenience that the multiple carriers are used but out of necessity and pure ingenious engineering. The next difference might be the frequencies but after further research we have determined that the frequency of transmission for all of the standards lies in the VHF range and UHF range of 50 – 862 MHz. The error encoding methods are different in that in DVB-T. China employs a Low Density Parity Check with different code Rates were as with different code rates. North America has a Trellis code and Japan has the Trellis Code (8PSK) with convolution. All except China use a Reed Solomon Error Coding. China uses BCH Coding.

4.1 Input Frequencies

The lower channels are located on the VHF Band of 50 to about 200 MHz and the upper channels are located on the UHF band of about 470 – 850 MHz. A sample chart of the Los Angeles Digital and Analog Allocations prior to the digital transition is shown below. In ATSC and NTSC there are the following channel distributions.

Index	Designation	Channel Name	Max Resolution	Aspect Ratio
1	2-1	KCBS-DT	1080i	16:9
2	4-1	NBC-4LA	1080i	16:9
3	4-2	WX-Plus	480i	4:3
4	5-1	KTLA-DT	1080i	16:9
5	9-1	KCAL-DT		
6	11-1	KTTV-DT	720p	16:9
7	18-1	LA18DT	480i	4:3
8	18-2	LA18-2	480i	4:3
9	18-5	LA18-5	480i	4:3
10	22-1	KWHY-HD		
11	22-2	KWHY-SD		
12	28-1	KCET-HD	720p	16:9
13	28-2	KCET-OC	480i	4:3
14	28-3	KCET-VM	480i	4:3
15	28-4	KCET-W	480i	
16	30-1	ION	480i	4:3
17	30-2	Qubo	480i	4:3
18	30-3	IonLife	480i	4:3
19	30-4	Worship	480i	4:3
20	34-1	KMEX-DT	480i	4:3
21	44-1	KMXLA-DT	480i	4:3
22	44-2	KVMD-DT	480i	4:3
23	46-1	KFTR-DT	480i	4:3
24	50-1	KOCE-HD	480i	4:3
25	50-2	KOCE-OC	480i	4:3
26	50-3	Daystar		
27	50-4	KOCE-SD		
28	54-1	KAZA-DT		
29	56-1	KODC-HD	1080i	16:9
30	56-2	KODC-SD1	480i	4:3
31	56-3	BVM-TV	480i	4:3
32	57-1	KJLA-DT	480i	4:3
33	57-2	KXLA-DT	480i	4:3
34	57-3	KVMD-DT	480i	4:3
35	57-4	LATV	480i	4:3

Table 4.1 – West Los Angeles Channel Allocation (Digital and Analog Broadcast)

VHF Low Band:		VHF High Band:	
Channel	Frequency (megahertz)	Channel	Frequency (megahertz)
2	54-60	7	174-180
3	60-66	8	180-186
4	66-72	9	186-192
		10	192-198
5	76-82	11	198-204
6	82-88	12	204-210
		13	210-216

UHF Band:

Chan	Freq (MHz)	Chan	Freq (MHz)	Chan	Freq (MHz)	Chan	Freq (MHz)
14	470-476	32	578-584	50	686-692	68	794-800
15	476-482	33	584-590	51	692-698	69	800-806
16	482-488	34	590-596	52	698-704	70	806-812
17	488-494	35	596-602	53	704-710	71	812-818
18	494-500	36	602-608	54	710-716	72	818-824
19	500-506	37	608-614	55	716-722	73	824-830
20	506-512	38	614-620	56	722-728	74	830-836
21	512-518	39	620-626	57	728-734	75	836-842
22	518-524	40	626-632	58	734-740	76	842-848
23	524-530	41	632-638	59	740-746	77	848-854
24	530-536	42	638-644	60	746-752	78	854-860
25	536-542	43	644-650	61	752-758	79	860-866
26	542-548	44	650-656	62	758-764	80	866-872
27	548-554	45	656-662	63	764-770	81	872-878
28	554-560	46	662-668	64	770-776	82	878-884
29	560-566	47	668-674	65	776-782	83	884-890
30	566-572	48	674-680	66	782-788		
31	572-578	49	680-686	67	788-794		

Channels 70-83 were de-allocated in 1982. They are now cell phone frequencies.
Channels 52-69 will be de-allocated on February 17, 2009.
Channel 37 is allocated to radio astronomy.

Table 4.2 – Frequency Allocations for TV Channels in the U.S.

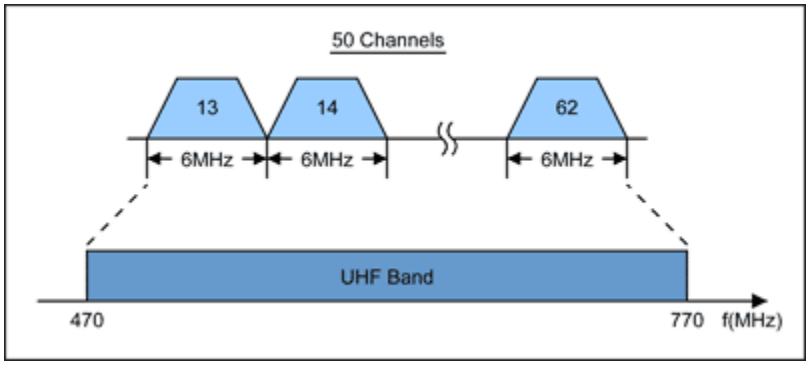

Figure 4.3 – Digital TV Allocation for UHF Channels (6MHz Channel)

4.2 Demodulation Methods

ATSC

The North American Method uses 8VSB demodulation whereas in Europe and Japan the demodulator is implemented using a FFT in combination with other blocks. The downstream portion of an 8VSB demodulator is realized using synchronous demodulation followed by a low pass filter. The main difference in an 8VSB demodulator compared to the OFDM demodulator is the fact that the OFDM has to perform a Fast Fourier Transform on the digital signal as part of the processing whereas the 8VSB receiver performs a synchronous demodulator.

DVB-T

DVB supports two modes for OFDM transmission: 2K (1705 carrier) and 8K (6817 carrier), with QAM carriers. While the 8K mode can allow more multipath protection, the 2K mode offers advantages for moving receivers. Five code rates are supported, from 1/2 to 7/8. The code rate 1/2 has the highest redundancy, but the highest transmission safety. A code rate of 7/8, on the other hand, has a low redundancy but a very weak error protection. Three types of non-differential modulation schemes can be selected: QPSK, 16-QAM and 64-QAM, offering 2, 4 or 6 bits per modulation symbol, respectively (Cugnini).

ISDB-T

The modulation scheme used is Band-Segmented Transmission OFDM (BST-OFDM). The transmission band consists of OFDM segments each with a bandwidth of approximately 430 kHz. There is a maximum of 13 segments to give a total bandwidth of 5.6 MHz. Similar to DVB systems, the ISDB specification allows for three modes of transmission: 2k, 4k, and 8k. ISDB-S also defines the 204 byte code length used in R-S encoding and is combined with BPSK, QPSK, and Trellis-coded 8PSK (TC8PSK). ISDB-T uses QPSK, Differential QPSK, 16-QAM, and 64-QAM (Francis).

DMB-T

The Chinese government has developed a proprietary system, now called DTMB, for Digital Terrestrial Multimedia Broadcasting. Incorporating MPEG2 systems with video coding provisionally similar to MPEG-4/AVC, the transmission scheme features a layered frame structure synchronized with real time, a function developed for power saving. Single-carrier and multicarrier operation are possible, and four-level through 64-level QAM are supported.

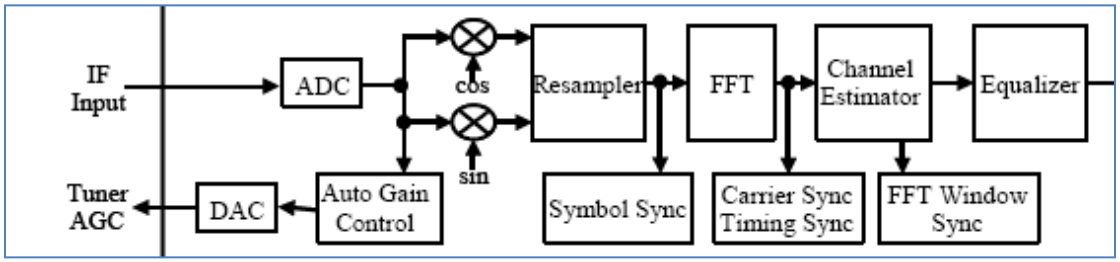

Figure 4.1 – Functional Block of a DVB-T Demodulator

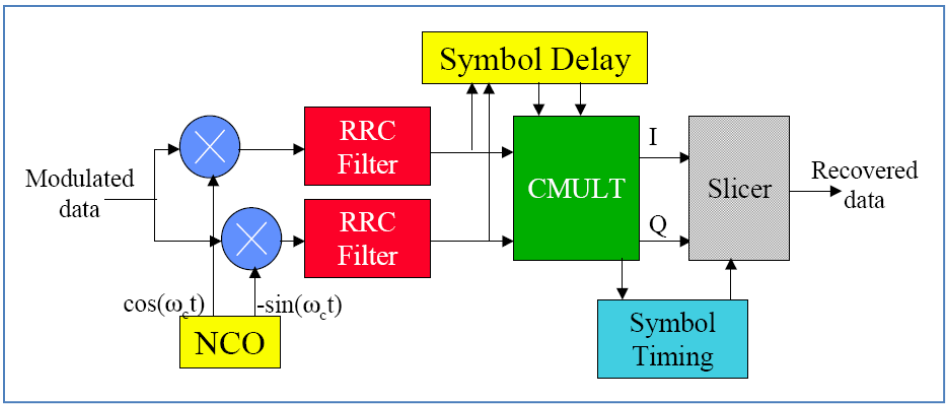

Figure 4.2 – D-QPSK Demodulator Used in an ISDB-T System (Andraka)

Systems	ATSC 8-VSB	DVB COFDM	ISDB BST-COFDM
Modulation	8-VSB and 16-VSB	COFDM QPSK, 16QAM and 64QAM Hierarchical modulation: multi-resolution constellation (16QAM and 64 QAM) Guard interval: 1/32, 1/16, 1/8 & 1/4 of OFDM symbol 2 modes: 2k and 8k FFT	BST-COFDM with 13 frequency segments DQPSK, QPSK, 16QAM and 64QAM Hierarchical modulation: choice of three different modulations on each segment Guard interval: 1/32, 1/16, 1/8 & 1/4 of OFDM symbol 3 modes: 2k, 4k and 8k FFT

Table 4.3 - Summary of 3 Modulation Methods

4.3 Error Correction Methods

DVB-T

The outer error protection is implemented with a block code that is a Reed–Solomon (255 239) code. A total of 16 correction bytes are appended to the 239 information bytes to get a total of 255 bytes. Since the Transport Stream packet has a length of only 188 bytes the first 51 bytes are set to zero and are not transmitted. This way a Reed–Solomon (204 188) code has been created (Ladebusch).

ATSC

Reed Solomon encoding is used and adds 20 bytes of parity data. It is specified as a t= 10 (207, 187). The data packet is now 207 bytes (with sync, 208). The algorithm is capable of correcting up to 10 bytes with burst errors.

DMB-T

FEC code is concatenation of outer BCH (762, 752) derived from BCH (1023, 1013), and inner low density parity check (LDPC) code with three different coding rates (0.4, 0.6, 0.8).

ISDB-T

The error-correction scheme uses concatenated codes, namely, Reed-Solomon (204,188) code for the outer code and convolutional code for the inner code. The information bit rate takes on various values depending on the selected modulation scheme, inner-code coding rate, and guard-interval ratio (Yokohata).

4.4 Source Coding

DVB-T

DVB uses a MPEG-2 transport stream to convey compressed digital video, compressed digital audio and ancillary data over a 6, 7 or 8 MHz channel. This enables addressing the needs of different countries that may adopt the standard. The MPEG-2 transport stream has a maximum bit rate of ~24.1 Mbps (8 MHz DVB-T) or ~51 Mbps (8 MHz 256-QAM DVB-C). DVB-S bit rates are dependent on the transponder bandwidth and code rates used, and can approach 54 Mbps. The bit rate can be used in a very flexible manner, trading-off the number of programs offered versus video quality and resolution. Video compression is based on MPEG-2 encoding. Audio compression is implemented using MPEG-1 Layer II, MPEG-2 BC multi-channel Layer II, Dolby® Digital or DTS®. Support for MPEG-4 HE-AAC is in the process of being added to the specification (Jack 798).

ATSC

Although any resolution may be used as long as the maximum bit rate is not exceeded, there are several standardized resolutions. Both interlaced and progressive pictures are permitted for most of the resolutions. Video compression is based on MPEG-2. However, there are some minor constraints on some of the MPEG-2 parameters, as discussed within the MPEG-2 chapter. Audio compression is implemented using Dolby® Digital and supports 1–5.1 channels. The main audio, or associated audio which is a complete service (containing all necessary program elements), has a bit rate ≤448 kbps (384 kbps is typically used). A single channel associated service containing a single program element has a bit rate ≤128 kbps. A two channel associated service containing only dialogue has a bit rate ≤192 kbps. The combined bit rate of a main and associated service which is intended to be decoded simultaneously must be ≤576 kbps. There are several types of audio service defined.

ISDB-T

Primary video compression is based on MPEG-2. However, there are some minor constraints on some of the MPEG-2 parameters, as discussed within the MPEG-2 chapter. ISDB also supports MPEG-4 video using CIF, SIF, QCIF, QSIF and QVGA resolutions. Primary audio compression is implemented using MPEG-2 AAC-LC. Up to 5.1 channels are supported. ISDB also supports MPEG-4 audio.

DMB-T

T-DMB uses MPEG-4 Part 10 (H.264) for the video and MPEG-4 Part 3 BSAC or HE-AAC V2 for the audio. The audio and video is encapsulated in MPEG-2 TS. The stream is RS encoding and the parity word is 16 bytes length. There is convolutional interleaving made on this stream, then the stream is broadcast in data stream mode on DAB. In order to diminish the channel effects such as fading and shadowing, DMB modem uses OFDM-DQPSK modulation. A single-chip T-DMB receiver is also provided by an MPEG-2 transport stream demultiplexer (Ladebusch).

4.5 Similarities and Differences

Similarities

- All four standards rely upon the UHF frequency range for transmitting data
- All four standards use MPEG-2 Video Encoding for the Source Data
- The channel bandwidth for each standard is 6MHz
- All standards require a type of digital demodulator
- All employ a forward error correction as well as an inner coding
- The transport streams are very close to one another

Region		Transmission	Transport	Video	Audio
Africa	South Africa	DVBT	MPEG2	MPEG2	MPEG2
Asia	China	DTMB	MPEG2	MPEG2 or AVS-China	MPEG2 or AVS-China
	India	DVBT	MPEG2	MPEG2	MPEG2
	Japan	ISDBT			MPEG2/AAC
	Russia	DVBT			MPEG2
	South Korea	ATSC			AC-3
Australia		DVBT	MPEG2	MPEG2	MPEG2, AC-3
Europe		DVBT	MPEG2	MPEG2	MPEG2
North America	Canada	ATSC	MPEG2	MPEG2	AC-3
	Mexico				
	United States				
South America	Argentina	ATSC	MPEG2	MPEG2	AC-3
	Brazil	ISDBT			MPEG2/AAC
	Honduras	ATSC			AC-3

Table 4.4 - Summary of Similarities of Audio Video Coding

Differences

- The only standard using single carrier is United States
- The rest use multiple carrier with different modulation schemes
- ATSC and ISDB-T have similar error correction
- DVB-T has its own error correction using convolution coding and RS coding
- DMB-T uses BCH-Code and LDPC code
- The payload data rate as shown in the overall summary table shows the differences

System	ATSC	DVBT	ISDBT	DMBT
Proposing region	United States	Europe	Japan	China
Transmission	Single carrier	Multiple carrier (OFDM)		Single carrier (QAM)/Multiple carrier (OFDM)
Bandwidth	6MHz/7MHz/8MHz	6MHz/7MHz/8MHz	6-8 MHz	8MHz
Modulation	8-VSB	QPSK/16-QAM/64-QAM	DQPSK/QPSK/16QAM/64QAM	4QAM/16QAM/32QAM/64QAM
Error correction	Trellis code + RS	Convolution code + RS	Trellis code + RS	BCH code + LDPC code
Characteristic	Distributed-transmission capability	SFN capability	SFN capability, segmented OFDM, time interleaving	Time interleaving, frequency interleaving

Table 4.5 - Differences in Error Coding and Modulation Schemes

5. Summary

Standard name	DVB-T (Europe)	DMB-T/H (China)	ATSC (North America)	ISDB-T (Japan)
Ratified year	1997	2006		
Frequency range of	470 - 862	470 – 862	54 - 870	470 – 862
today's equipment				
(MHz)				
Channel spacing *B*	8	8	6, 7, or 8	6, 7, or 8
(MHz)				
Number of subcarriers *N*	2K mode: 1705	1 (single-carrier)	Single	
	8K mode: 6817	3780 (multi-carrier)		
Subcarrier modulation scheme	QPSK[1], 16QAM or 64QAM	4QAM[1], 4QAM-NR,[2]	8-VSB	DQPSK/QPSK/ 16QAM/64QAM
		16QAM, 32QAM and 64QAM.		
Useful symbol length T_U	2K mode: 224	500 (multi-carrier)		
(µs)	8K mode: 896			
Additional guard interval T_G	1/4, 1/8, 1/16, 1/32	1/4, 1/6, 1/9		1/4,1/8,1/16,1/32
(Fraction of T_U)				
Subcarrier spacing	2K mode: 4464	8 M (single-carrier)		
$\Delta f = 1/(T_U) \approx B/N$	8K mode: 1116	2000 (multi-carrier)		
(Hz)				
Net bit rate *R*	4.98 - 31.67	4.81 - 32.49	19.39	3.65-23.2
(Mbit/s)	(typically 24)			
Link spectral efficiency R/B	0.62 - 4.0	0.60 - 4.1		
(bit/s/Hz)				
Inner FEC	Conv coding with code rates	LDPC with code rates	Trellis Code	Trellis (TC8PSK) & Convolution
	1/2, 2/3, 3/4, 5/6 or 7/8	0.4, 0.6 or 0.8		
Outer FEC (if any)	RS(204,188,t=8)	BCH code (762,752)	RS (207, 187)	RS (204, 188)
Maximum travelling speed	53 - 185			
(km/h)				
Time interleaving depth	0.6 - 3.5	200 - 500		
(ms)				
Adaptive transmission	None			
(if any)				
Multiple access method	None			
(if any)				
Typical source coding	4 Mbit/s	Not defined		
	MPEG2	(MPEG-2 or H.264 w/MP2)	MPEG-2	MPEG-2 Audio (AAC) MPEG-2 Video

Table 5.1 - Summary of All Four Region Characteristics

6. Conclusion

Use the following recommendation when implementing the project. Simulate the front end analog components of the circuit and then develop the actual hardware using a printed circuit board. Buy a commercial FPGA development board with an on board ADC that will digitize incoming signals. Interconnect the board to the analog front end printed circuit board which will include the following components: Variable Gain Amplifier that is digitally controlled from the FPGA, tunable band pass filter with adjustable bandwidth order to control the range of overall frequencies. Remaining components include tunable local oscillator, IF mixers, and two Analog to Digital Converters for digitizing the complex signal generated by the IQ mixing process.

Connect the output of each ADC to the input ports of the FPGA board. Decide if the FPGA will do all signal processing or if there will be a balance of work between the FPGA and the Computer Software. If the FPGA will do a majority of the work then use a Hardware Description Language such as Verilog or VHDL. Conversely, if the computer will do the majority of the work, program the FPGA for its task (complex multiplication and digital down conversion). On the software side use a programming language such as Python for implementing software defined routines. Obviously, a digital system engineered in software will be slower than directly on a chip but will be remarkably more flexible and more easily changed. Decide where the dividing line will be initially before proceeding with the development of the project. Figure 6.1 shows an FPGA implementation of a TV receiver. All analog components reside outside of the FPGA.

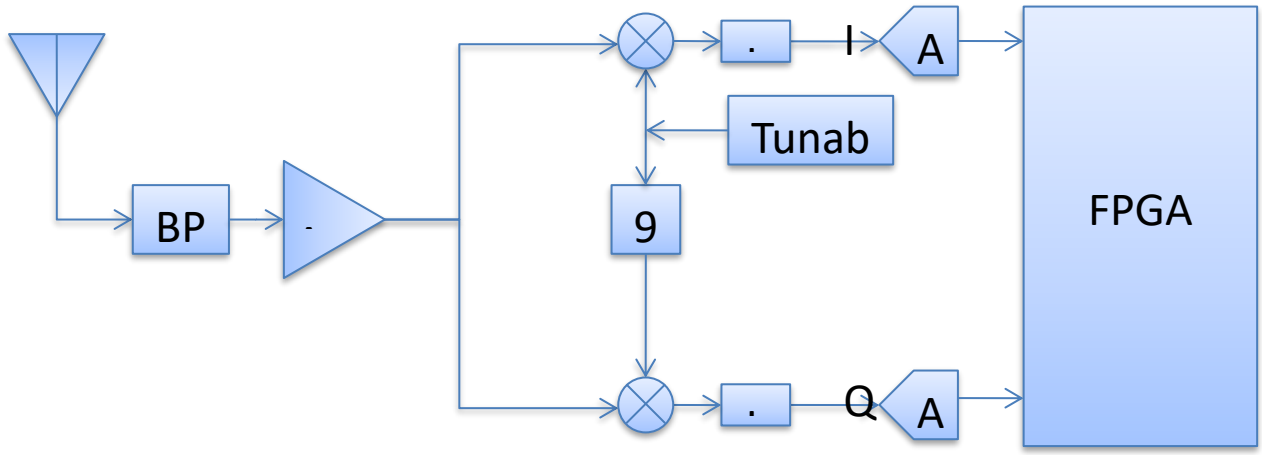

Figure 6.2 – Recap of the FPGA and Analog Front End Receiver

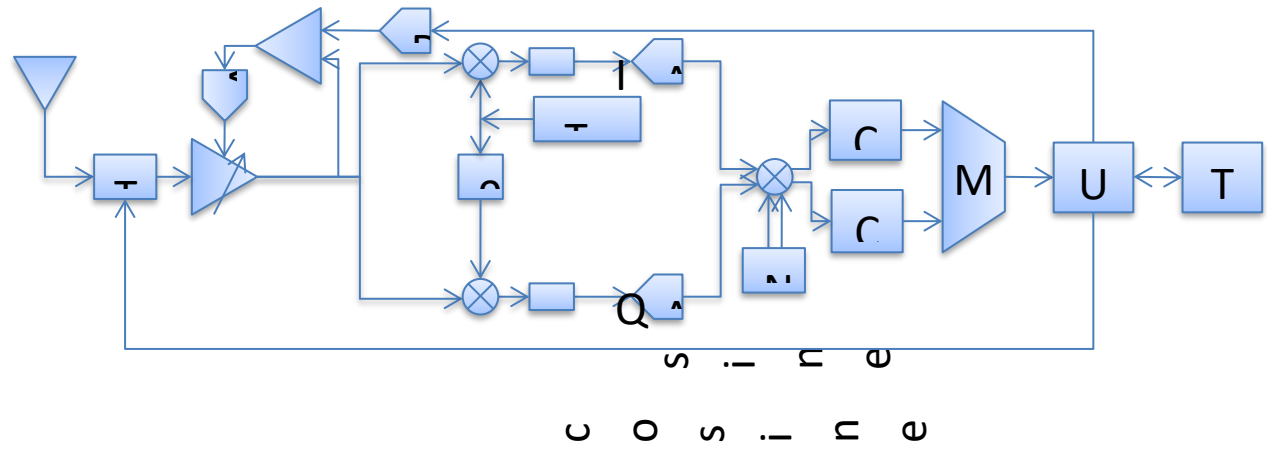

Figure 6.2 – Expanded Diagram of the Receiver

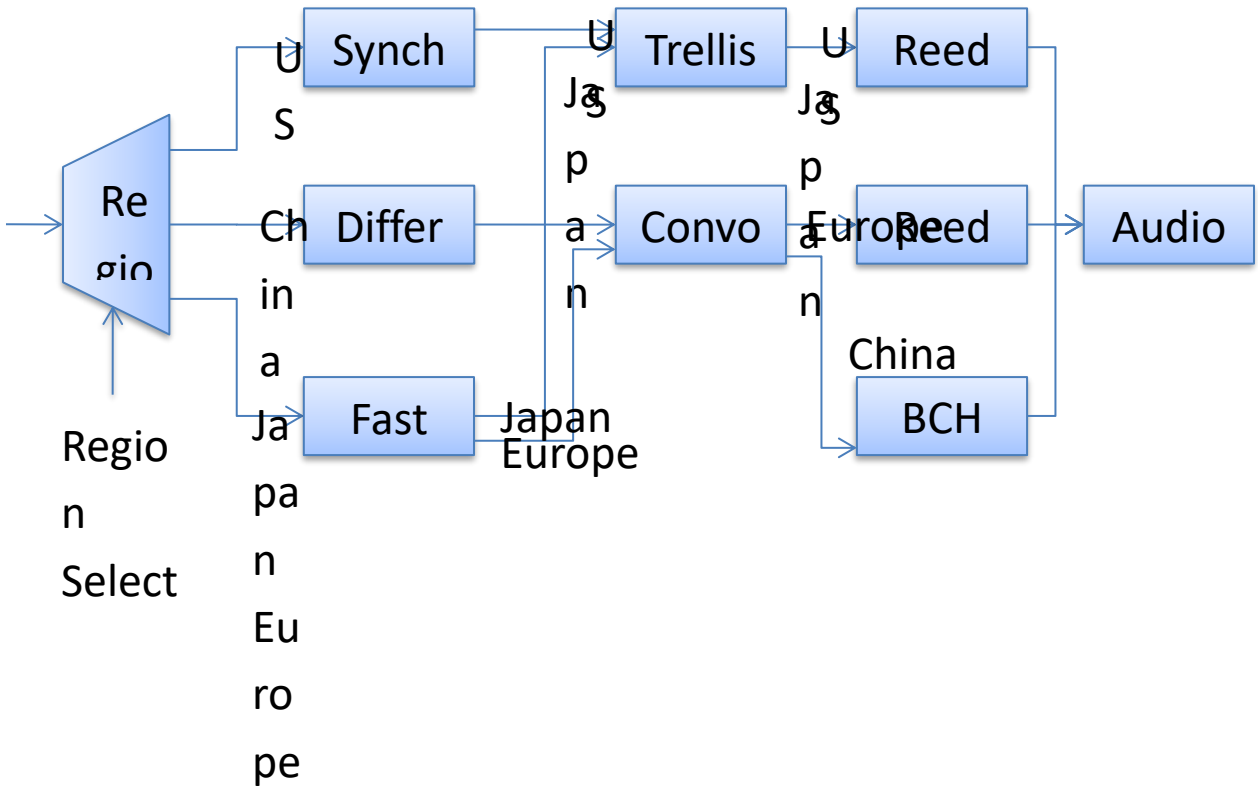

Figure 6.3 – Main Components on the TV Receiver (Right Most Block of Figure 6.2)

The Demultiplexer directs the signal to the appropriate region block. From the demuliplexer come the demodulators which are regions specific. The trellis decoder and convolution decoder are types of error

correcting mechanisms. The forward error correction consists of either an RS decoder which is comprised of significant bits and parity bits for error correction. The BCH is a different type of error correcting mechanism. All of the Forward Error Correctors feed into the audio video decoder, which transmit the audio and video specific to the channel.

References

"ATSC transmission ." 20 June 2005. Broadcast Engineering. 25 Jul 2008 <http://broadcastengineering.com/infrastructure/Atsc-transmission-digital-20050620/>.

"Digital Multimedia Broadcasting." Wikipedia. 2008. 25 Jul 2008

"Figure 12: Bandwidth Allocations for an FDM Communications System." Pulse-Shape Filtering in Communications Systems. 2 January 2007. National Instruments. 25 Jul 2008 <http://zone.ni.com/devzone/cda/tut/p/id/3876>.

"Modulation." Wikipedia. 25 Jul 2008 <http://en.wikipedia.org/wiki/Modulation>.

"Pulse-Shape Filtering in Communications Systems." National Instruments. 25 Jul 2008 <http://zone.ni.com/devzone/cda/tut/p/id/3876>.

"What Exactly is ATSC?." HDTV Primer. 25 Jul 2008 <http://www.hdtvprimer.com/ISSUES/what_is_ATSC.html>.

Andraka, Ray. "Modulation and Demodulation Techniques for FPGAs." 2000. DesignCon 2000. 25 Jul 2008 <http://www.andraka.com/files/designcon00.pdf>.

Barnes, Kai. "Multiantenna SDR Architectures and its Simplificaiton Methods." 8.2.2005. Centre for Wireless Communications. 25 Jul 2008 <http://www.cwc.oulu.fi/home/coursedata/softwareradios_juntti/SDR_arch.pdf>.

Cugnini, Aldo. "World TV standards." Boradcast Engineering. 01 October 2007. 25 Jul 2008 <http://broadcastengineering.com/hdtv/world_tv_standards/>.

Dick, Chris. "Design and Implementation of High-Performance FPGA Signal Processing Datapaths for Software Defined Radios." Xilinx Inc.. 25 Jul 2008 <http://www.xilinx.com/esp/mil_aero/collateral/ProductEngineering/design_implementaion.pdf>.

Francis, Michael. "Forward Error Correction in Digital Television Broadcast Systems." 21 April 2008. Xilinx. 25 Jul 2008 <http://www.xilinx.com/support/documentation/white_papers/wp270.pdf>.

Gray, Robert. "Costas Loop, Noise in AM, SSB/VSB. AM Radio and Superheterodyne Receivers." Stanford University. 25 Jul 2008 <http://www.stanford.edu/class/ee179/summaries/lecture19.pdf>.

Jack, Keith. Video Demystified. 4th Edition. Burlington: Newnes, 2004.

Ladebusch, Uwe. "Terrestrial DVB (DVB-T): A Broadcast Technology for Stationary Portable and Mobile Use." Proceedings of the IEEE 94(2006): 183-193.

Miller, William. "Chapter 9 DTV Test, Measurement And Monitoring." The Guide to Digital Television, Third Edition. 01 March 2000. United Entertainment Media. 24 Jul 2008 <http://www.thevideoguru.com/dtvbook/ch9.html>.

Oyamada, Kimiyuki. "ISDB-C - Cable Television Transmission for Digital Broadcasting in Japan." Asia-Pacific Broadcasting Union 2001 25 Jul 2008 <http://www.nhk.or.jp/strl/publica/bt/en/pa0007.html>.

Sparano, David. "What Exactly is 8-VSB Anyway?." 14 August 2002. Harris Corporation Broadcast Division. 25 Jul 2008 <http://www.8vsb.com/WhatExactlyIs.htm>.

Tuğcu, Tuna. "Cognitive Radio." 25 Jul 2008 <http://www.cmpe.boun.edu.tr/~tugcu/research.html#Cognitive_Radio>.

Yokohata, Kazunori. "ISDB-T Transmission Technology - Single transmission for fixed, vehicular, and handheld receivers." 25 Jul 2008 <http://ru.ictp.uz/summit2007/yokohata.pdf>.