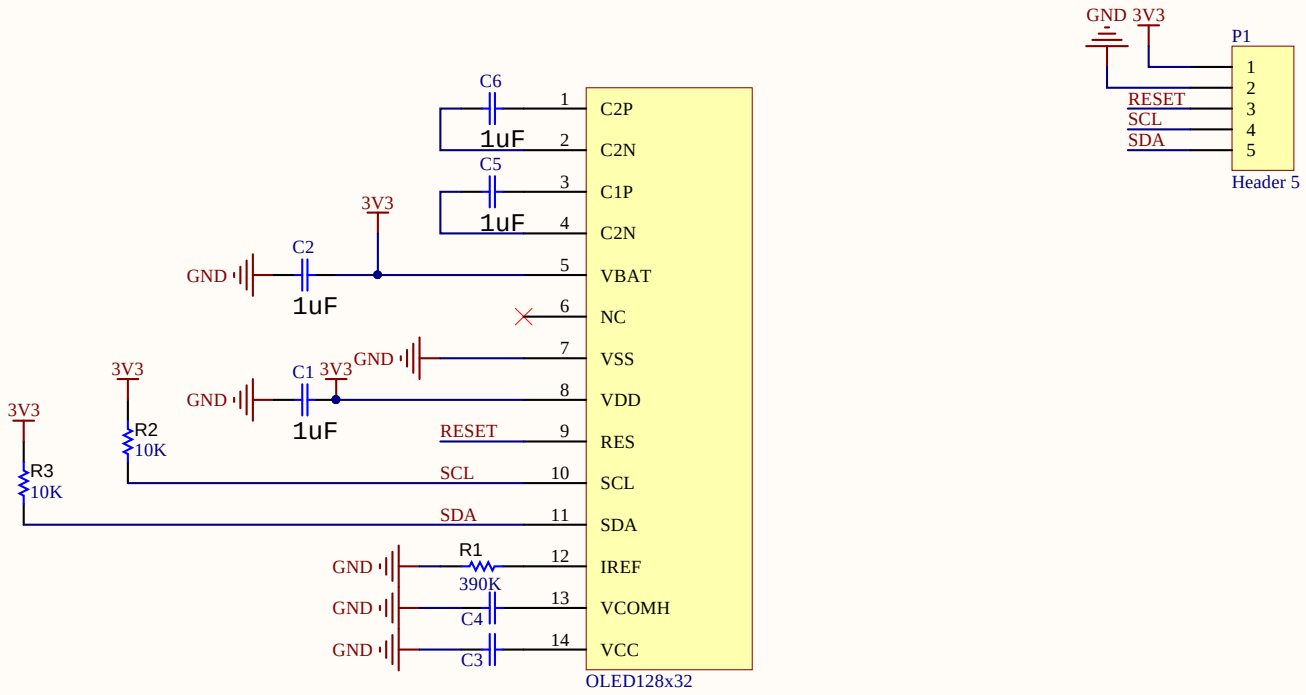

Title		
Size A	Number	Revision
Date: 02/02/2019	Sheet of	
File: D:\altium projects\..\oled128x32.SchDoc	Drawn By:	