A Course based Project Report On

ELECTRIC BELL

Submitted in partial fulfilment of
requirement for the completion of the
Engineering Worshop Laboratory course

B. Tech COMPUTER SCIENCE AND ENGINEERING
of

VNRVJIET

By

1. **AKSHITHA REDDY BONUGA (24071A0506)**
2. **ALAPATI BHAVANA (24071A0507)**

Under the Guidance of

MR.S.BHANU MURTHY

DR.K.BALASHOWRY

Department of Mechanical Engineering

2024-2025

VALLURIPALLI NAGESWARARAO
VIGNANA JYOTHI INSTITUTE OF ENGINEERING & TECHNOLOGY
(AUTONOMOUS INSTITUTE) NAAC ACCREDITED WITH 'A^{++}' GRADE
Vignana Jyothi Nagar, Bachupally, Nizampet (s.o), Hyderabad 500090
Phone no: 040-23042758/59/60, Fax: 040-23042761
Email:postbox@vnrvjiet.ac.in Website: www.vnrvjiet.ac.in

DECLARATION

We hereby declare that this Project Report titled **"ELECTRIC BELL"** submitted by us of **COMPUTER SCIENCE AND ENGINEERING** in **VNR Vignana Jyothi Institute of Engineering and Technology,** is a bonafide work undertaken by us and it is not submitted for any other certificate/course or published any time before.

Signature of the Student/Date

1.

2.

VNR VIGNANA JYOTHI INSTITUTE OF ENGINEERING & TECHNOLOGY

(AUTONOMOUS INSTITUTE)

NAAC ACCREDITED WITH 'A^{++}' GRADE

CERTIFICATE

This is to certify that the project entitled **"ELECTRIC BELL"** submitted in partial fulfilment for the course of Engineering Workshop Laboratory being offered for the award of B.Tech **COMPUTER SCIENCE AND ENGINEERING** by **VNR VJIET** is a result of the bonafide work carried out by **Akshitha Reddy Bonuga (24071A0506), Alapati Bhavana (24071A0507),**

during the year **2024-2025**. This has not been submitted for any other certificate or course.

Internal Examiner - 1 **Internal Examiner - 2**

External Examiner **Head, Department of CSE & CSBS**

ACKNOWLEDGEMENT

An endeavor over a long period can be successful only with the advice and support of many well-wishers. We take this opportunity to express our gratitude and appreciation to all of them.

We wish to express our profound gratitude to our honourable **Principal,** and **HOD, COMPUTER SCIENCE AND ENGINEERING, VNR Vignana Jyothi Institute of Engineering and Technology** for their constant and dedicated support towards our career moulding and development.With a great pleasure we express our gratitude to the internal guides, **Mr.S.Bhanu Murthy, Dr.K.Balashowry, Engineering Workshop,** for their timely help, constant guidance, cooperation, support, and encouragement throughout this project as it has urged us to explore many new things.

Finally, we wish to express our deep sense of gratitude and sincere thanks to our parents, friends and all our well-wishers who have technically and non-technically contributed for the successful completion of this course-based project.

TABLE OF CONTENTS

S.NO.	CONTENTS	PAGE NO.
1.	ABSTRACT	1
2.	INTRODUCTION	2
3.	PROJECT OBJECTIVE	3
4.	METHODOLOGY	4-5
5.	COMPONENTS REQUIRED	6
6.	CIRCUIT DESCRIPTION	7
7.	PROCEDURE	8
8.	SAFETY TIPS	9
9.	APPLICATIONS	10-11
10.	CONCLUSIONS	12
11.	FUTURE SCOPE	13

ABSTRACT

The electric bell is a perfect demonstration of the conversion of electrical energy into mechanical energy to create sound through electromagnetism. This project intends to design and build a working model of an electric bell to increase students' knowledge of basic electrical and magnetic principles. Through this project, students acquire theoretical and practical knowledge in important topics like electric circuits, electromagnetic force, oscillating systems, and switch mechanisms. The bell is powered by a self-interrupting circuit, in which the constant turning on and off of an electromagnet results in a striker striking a bell repeatedly and creating a ringing sound. This straightforward yet efficient mechanism is also an educational device, demonstrating the real-world applications of physics in simple devices such as alarms and timers. Moreover, this project develops problem-solving skills, promotes creativity, and lays the groundwork for learning more complex electronic and automation systems in the future.

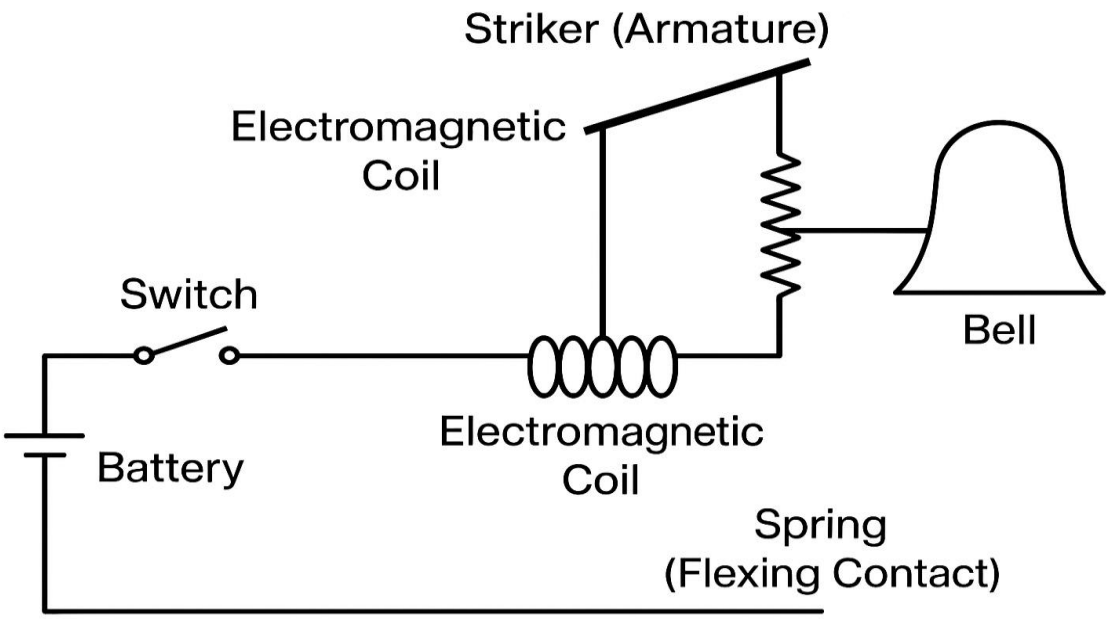

INTRODUCTION

An electric type of bell is a very simple creation that nevertheless is quite tricky and motivating in its functioning which is based on the electromagnetic principles. This project represents the users with the basic applications of electromagnetism and the usage of electricity in mechanical vibration production of the sound. The alarm, which is normally used for different types of notifications in houses, schools, or public systems, is an electric bell. This project is simple and best for those, who are at beginner or student level, help them to learn how the electric circuit works and how the power of the magnetic field can be harnessed to create mechanical work. The students will be exposed both to the theoretical as well as the practical side of the following subjects through this project:Electric current and circuits,Electromagnetic force,Switch mechanisms,Oscillating systems.

PROJECT OBJECTIVE

The main goal of this project is to build a completely operational model of an electric bell. By learning through practice, students will understand how electromagnetism is used to produce mechanical motion. The project familiarizes students with the basic principles of electrical circuits, such as series circuits and how switches work. Along with theoretical understanding, students will gain hands-on experience in simple electronic assembly and fault-finding methods. The project also offers a chance to see firsthand how electrical energy is transformed into motion and sound. Finally, it hopes to inspire creativity and curiosity in students and motivate them to explore further.

METHODOLOGY

1.Planning and Design

The first step was to comprehend the functioning of an electric bell and specify the parts needed. A circuit schematic diagram was sketched for visualizing electrical connections and mechanical arrangement. An attempt was made to develop a functional prototype showcasing the applied electromagnetism concept in sound production.

2.Component Selection and Procurement

The following components were used for the project:An electromagnetic coil to produce magnetic force,A striker/hammer to strike the bell,A bell or resonating surface to create sound,A switch to operate the circuit,A battery (3V or 6V) as a power source,Connecting wires and a mounting base.

All components were gathered and tested for functionality prior to assembly.

3.Assembly of Mechanical and Electrical Components

• The bell and striker were mounted firmly on a baseboard

• The electromagnet was placed close to the striker to pull it when energized.

• The switch was connected in series with the battery and coil to regulate the supply of electricity.

• The striker was aligned properly so that it would move freely and strike the bell.

4.Circuit Connection and Testing

The electrical connections were made as per the circuit diagram.The battery was wired, and the switch was employed to check the functioning of the bell.When the switch was closed, current passed through the coil, magnetizing it and

attracting the striker towards the bell. This contact broke the current, and the striker went back, the process repeating quickly to create a ringing sound.

5.Observation and Troubleshooting

The system was observed closely to make sure that it rang continuously.Problems like weak strikes, incorrect alignment, or loose contacts were diagnosed and resolved.The spring tension and striker position were adjusted to maximize performance.

6.Safety Precautions

The electromagnet was only operated at the recommended voltage to prevent it from overheating.The battery was removed when the device was not being used to minimize energy wastage.Precautions were exercised to keep exposed wire ends insulated and prevent short circuits at assembly time.

7.Documentation and Analysis

The process was documented using photographs, circuit diagrams, and step-by-step texts.Observations regarding the effect of the magnetic field on mechanical motion were noted.The performance of the self-interrupting mechanism was tested and evaluated, and improvement suggestions were documented.

COMPONENTS REQUIRED

The project includes all necessary components to construct the electric bell:

- Electric Bell Frame : Holds the components and resonates to produce sound
- Electromagnetic Coil : Creates a magnetic field when current passes through
- Striker/Hammer : Hits the bell to create sound
- Switch : Controls the flow of electricity to the circuit
- Connecting Wires : Establish electrical connections
- Battery & Holder : Power supply for the circuit
- Mounting Base : Base to assemble and hold all components in place

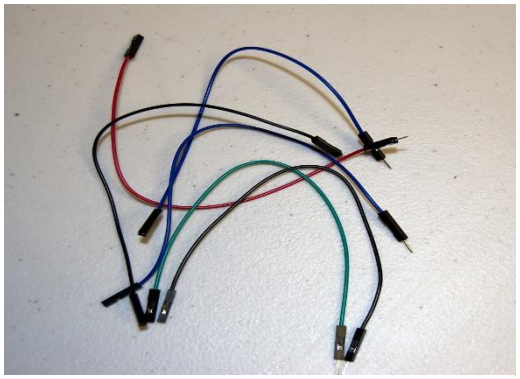

CIRCUIT DESCRIPTION

The electric bell works on a self-interrupting circuit using an electromagnet:

•When the switch is turned on, current from the battery flows through the electromagnetic coil.The coil becomes magnetized and attracts the striker toward it.

•As the striker moves, it hits the bell to produce a sound and simultaneously breaks the electrical contact.This breaks the circuit, and the electromagnet loses its magnetism.

•The striker returns to its original position due to a spring or natural tension, reconnecting the circuit.

•This cycle repeats rapidly, creating a continuous ringing sound as long as the switch is on.

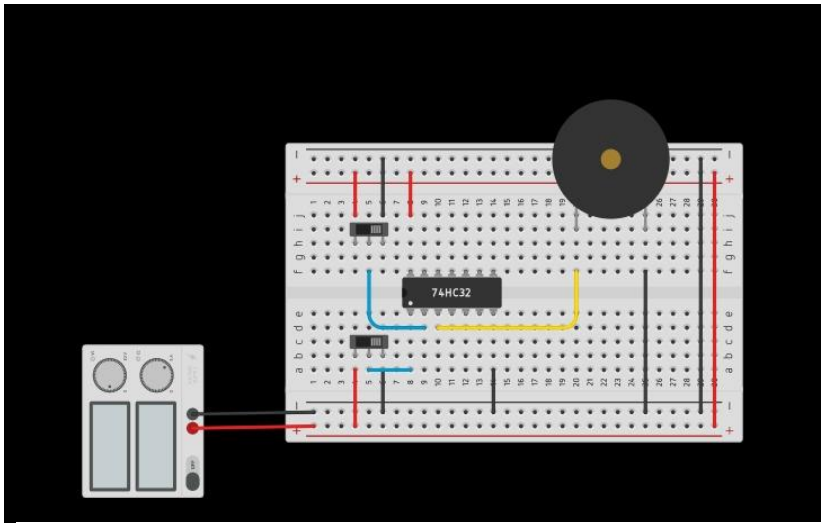

PROCEDURE

Following is a step-by-step procedure to assemble and test the electric bell:

•Ensure all parts are included and intact.

•Mount the Bell and Striker: Mount the bell and striker on the mounting platform

•Connect the Electromagnet:Connect one end of the wire to the battery holder.Connect the other end to the electromagnet coil.

•Add the Switch: Wire the switch in series with the electromagnet to regulate the flow of current.

•Check Alignment: Align the striker so that it can move freely and strike the bell.

•Install the Battery: Insert the batteries into the holder with proper polarity.

•Test the Circuit:Flip the switch.See the striker get attracted by the electromagnet and strike the bell.See how it keeps ringing because of the break-make nature of the circuit.

SAFETY TIPS

When working with electrical components, it’s important to follow safety guidelines:

- Use the recommended battery voltage (usually 3V or 6V) to avoid damaging the components.
- Do not touch open wire ends when the circuit is powered.
- Handle the electromagnet with care—prolonged use can generate heat.
- Always disconnect the battery when not using the circuit to prevent accidental short circuits or energy loss.
- Keep the assembly area dry and clean to avoid any conductivity issues.

APPLICATIONS

Electric bells find many applications in household and industrial usage because of their ease of operation, reliability, and efficiency in providing audible notification. The following are the primary areas where electric bells are most widely used:

- Home Doorbells: Electric bells are primarily used in households, where they are used as doorbells to inform inhabitants that someone has arrived at the door. Electric bells offer an easy, unobtrusive means of letting people know visitors have arrived.

- School Bells: Electric bells are employed in schools and colleges to mark the start and end of classes, lunchtime, or exams. They provide consistent timekeeping and effective schedule management.

- Fire Alarm Systems: Electric bells are part of fire alarm systems where they produce alarms in case of fire emergencies. Electric bells are usually linked with smoke detectors and ring automatically to facilitate instant evacuation.

- Industrial Alerts: Factories and production plants employ electric bells for numerous signaling functions—like shift, break times, machinery alerts, or emergency evacuations. Their repetitive and loud sound guarantees they are audible even in noisy conditions.

- Public Transport Systems: Electric bells are employed in trains and buses to signal door opening/closing or to alert the driver to passenger requests. They are vital in ensuring safety and communication.

- Elevators and Lifts: Elevator bells signal consumers when the lift reaches a floor or during emergencies. Auditory signals are particularly helpful for visually impaired people.

- Hospitals and Nursing Homes: Electric bells are utilized in hospitals as nurse call systems to signal staff when patients require attention. They can also form part of emergency alarm systems.

- Bank and Office Security: Offices and banks can employ electric bells as silent or audible alarm systems to alert security violations or emergencies.

- Timer and Control Systems: Electric bells can be linked to automatic timers or programmable logic controllers (PLCs) to develop alarm systems based on predetermined events, including overproduction, temperature extremes, or time-critical activities.

- Learning and Demonstration Tools: Electric bells are commonly utilized in classrooms and science fairs to illustrate fundamental principles in physics, including electromagnetism, electric circuits, and energy conversion. They are useful teaching tools as well as learning tools.

CONCLUSION

The project successfully shows the operation of an electric bell with the help of fundamental electronic components.It is an experiential learning of electromagnetism and how it is used to generate mechanical motion and sound.While constructing the model, students see firsthand how electrical energy is transformed into motion and sound.The project substantiates theoretical principles in physics and electronics by putting them into actual practice.It bridges the gap between learning from textbooks and actual implementation.Students also gain fundamental skills in circuit assembly and fault finding.The activity fosters active participation, problem-solving, and observation.It increases confidence and ignites curiosity towards electronics and science, technology, engineering, and mathematics -related studies.Generally, it is an enriching and interactive learning experience for novices.

FUTURE SCOPE

•Automation:The electric bell system can be improved by incorporating sensors like motion detectors, infrared sensors, or proximity sensors. With this, the bell can be automatically triggered as a person draws near, making it ideal for automatic doorbell systems, visitor notifications, or security alarms without the need for manual activation.

•Wireless Triggering:The inclusion of Bluetooth, RF (Radio Frequency), or IR (Infrared) modules supports wireless control over the bell. This can be used to make the bell ring remotely through a mobile device or remote control, making it a great feature for smart homes or classrooms where direct wiring is impossible.

•Smart Home Integration:The electric bell can be integrated with microcontrollers like Arduino, Raspberry Pi, or ESP32 to implement an intelligent alert or notification system. These platforms support programming personalized behaviors such as time-based ringing, app-based notifications, or compatibility with other smart devices like voice assistants or security systems.

•Multiple Bell Systems : The project can be expanded to ring multiple bells that are operated by one switch or controller. This is particularly helpful in schools, offices, or big buildings where announcements or signals have to be transmitted simultaneously across various rooms or floors.