Ultrasonic Based Multi-Directional Parking Assist System Using 8051

Internship Project Report

Vaishnavi Suresh Dukre

SE , E&TC student.

Intrnforte

1. ABSTRACT

This project implements a multi-directional obstacle detection and warning system using the AT89C51 microcontroller. Four ultrasonic sensors are placed in front, rear, left, and right directions to measure distances continuously. The system calculates the nearest obstacle and categorizes the warning level into SAFE, CAUTION, or DANGER. The result is displayed on a 16x2 LCD and indicated through LEDs and a buzzer. This system simulates a basic automotive parking assist system using embedded programming and sensor interfacing.

---

2. COMPONENTS USED

- AT89C51 Microcontroller
- HC-SR04 Ultrasonic Sensors (4 units)
- 16x2 LCD Display
- LEDs (7 units)
- Buzzer
- 11.0592 MHz Crystal Oscillator
- 10k Potentiometer
- 330Ω Resistors
- Power Supply (5V)

---

3. SYSTEM ARCHITECTURE

The system consists of four ultrasonic sensors connected to Port 1 of the microcontroller. The LCD is interfaced in 4-bit mode using Port 2. Warning LEDs and buzzer are connected to Port 3. The controller measures echo pulse width using internal timers and computes distance. Based on threshold values, it activates appropriate indicators.

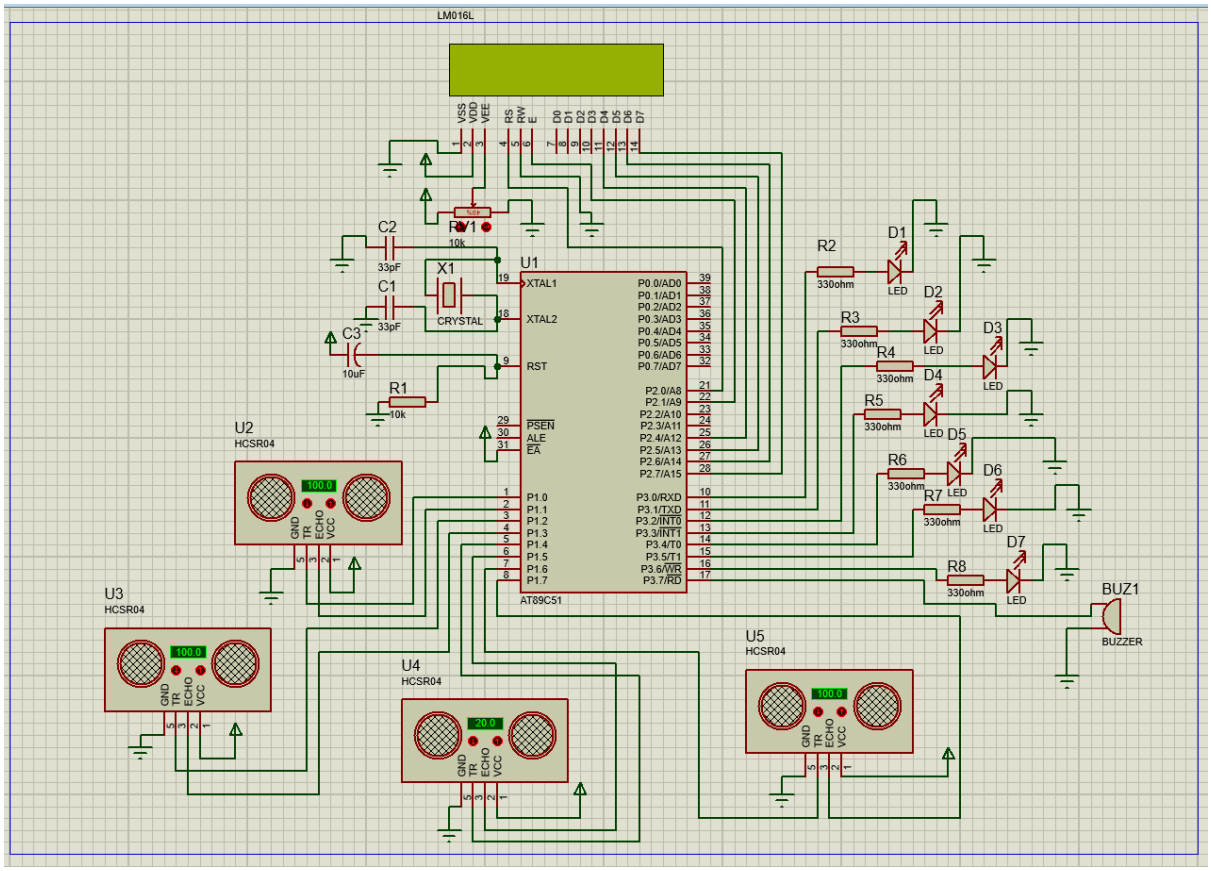

---

4. WORKING PRINCIPLE

1. The microcontroller sends a trigger pulse to an ultrasonic sensor.
2. The sensor transmits ultrasonic waves.
3. Echo signal duration is measured using Timer0.
4. Distance is calculated using time-of-flight principle.
5. The nearest distance among four sensors is determined.
6. Based on thresholds:
    - Distance > 60 cm → SAFE
    - 30–60 cm → CAUTION

- < 30 cm → DANGER

7. LCD displays warning level and direction.
8. Corresponding LEDs and buzzer are activated.

---

5. RESULTS

The system successfully detects obstacles in four directions. The nearest object is prioritized, and appropriate warning signals are generated. The LCD displays real-time distance and alert level.

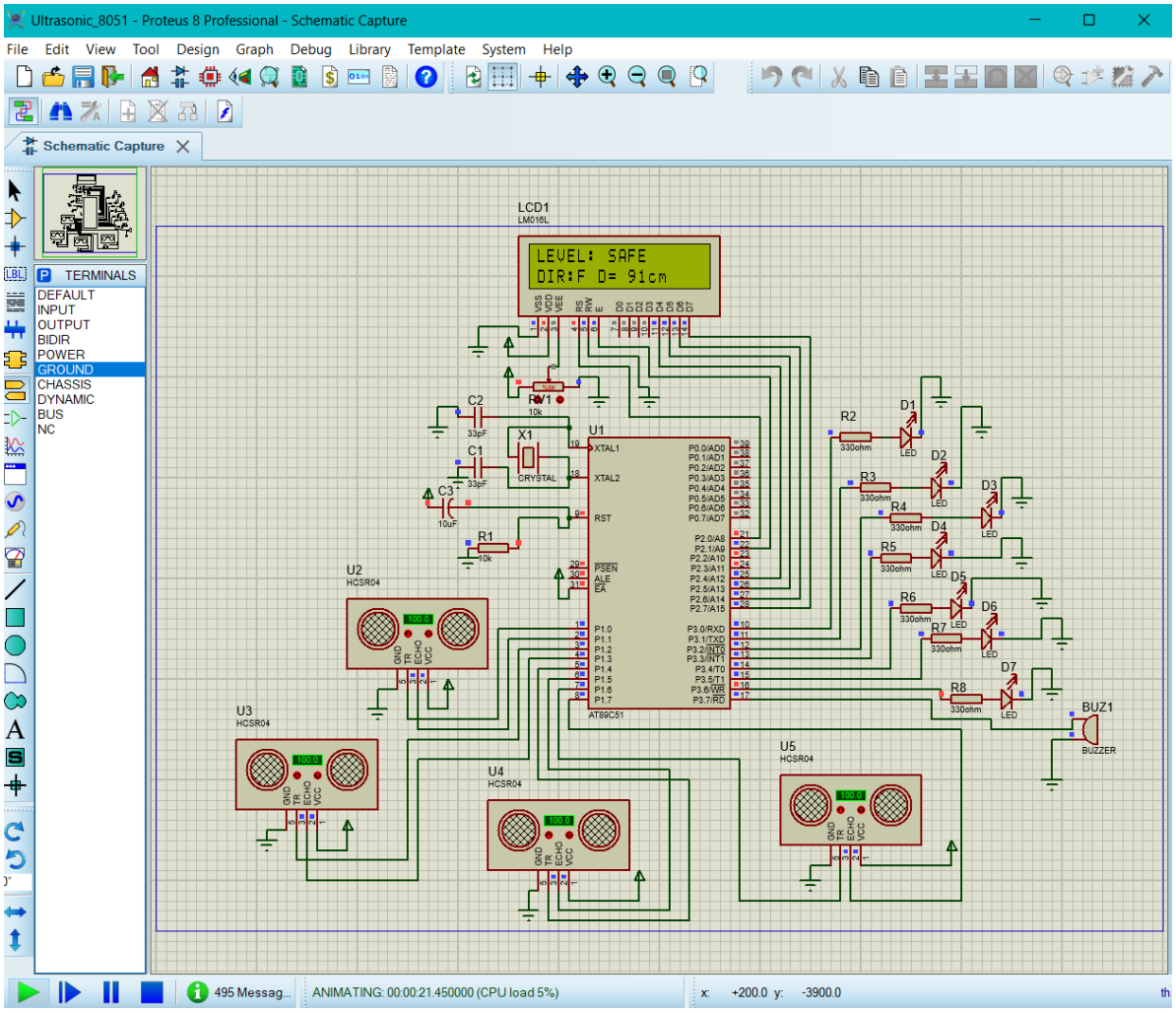

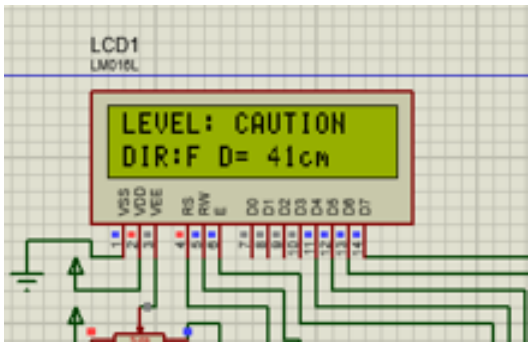

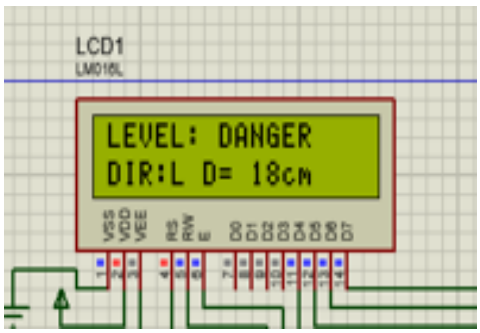

6. POSSIBLE LOOPHOLES

1. Ultrasonic sensors may not detect soft or sound-absorbing materials effectively.
2. Echo interference may occur when multiple sensors operate closely.
3. The system uses fixed threshold values which may not suit all environments.
4. Environmental noise and temperature variations may affect accuracy.

---

7. APPLICATIONS

- Automotive parking assistance
- Robotics obstacle detection
- Industrial safety monitoring

---

8. EMBEDDED SYSTEMS AND DISABILITY SUPPORT

Embedded systems play a vital role in assisting persons with disabilities. Smart wheelchairs use obstacle detection to ensure safe movement. Electronic walking canes assist visually impaired individuals by detecting obstacles. Hearing aids use embedded processors for real-time sound enhancement. Prosthetic limbs use embedded controllers to mimic natural movement. These systems increase independence, safety, and social inclusion.

---

9. CONCLUSION

The project demonstrates practical implementation of sensor interfacing, real-time processing, and embedded control using the 8051 microcontroller. It highlights how embedded systems can be applied to real-world safety applications.