Derivative Pricing and Credit Risk in a Regime Switching Economy using Quantum Amplitude Estimation

1st Eric Ghysels
UNC Chapel Hill
NC, USA
eghysels@gmail.com

2nd Jack Morgan
UNC Chapel Hill
NC, USA
jackhmorgan4@gmail.com

3rd Hamed Mohammadbagherpoor
IBM Quantum
NC, USA
hamed.mohammadbagherpoor@ibm.com

2024 IEEE International Conference on Quantum Computing and Engineering (QCE) | 979-8-3315-4137-8/24/$31.00 ©2024 IEEE | DOI: 10.1109/QCE60285.2024.00067

***Abstract*—Quantum computers are not yet capable of providing computational advantages for practical stochastic diffusion models commonly used by financial analysts. In this paper, we introduce a class of stochastic processes that are both realistic in terms of mimicking financial market risks and more amenable to potential quantum computational advantages. The models we study are based on a regime-switching volatility model driven by a Markov chain with observable states. We investigate algorithms to estimate credit risk and option pricing on a gate-based quantum computer. These models bring us closer to realistic market settings, thus bringing quantum computing closer to the realm of practical applications. We demonstrate the accuracy of the state preparation circuits outlined for each model using the *IBM_torino* and Honeywell H1 processors.**

***Index Terms*—Credit Risk, Derivative pricing, Quantum Computing, Quantum amplitude estimation (QAE)**

I. Introduction

The Quantum Amplitude Estimation (QAE) algorithm promises a quadratic speedup over the classical Monte Carlo (MC) method for modeling various sources of financial risk. To benefit from this speedup, we must develop a state preparation circuit that encodes the solution to a risk model in the amplitude of a particular quantum state. We will only achieve an advantage in this area when we develop a state preparation circuit that can be estimated with QAE on near-term hardware and solves a model that is sufficiently realistic for the finance profession. In this paper, we focus on a class of models involving a discrete state Markov process as an attempt to handle stochastic volatility in a QC algorithmic setting. More specifically, we study credit risk as well as option pricing risk management in a setting involving stochastic risk-free rates and volatility driven by a finite state Markov process.

QC algorithms for financial derivatives have been developed for a standard environment with constant risk-free interest rates and constant instantaneous volatility - the so called Black-Scholes (BS) [1] model - see e.g. [2]–[5] - among others. For several decades now, the finance profession has turned its attention to models featuring a more realistic setting involving stochastic volatility - see [6], [7] for literature reviews. Existing QC derivative pricing implementations such as [8] and [9] use financial models with substantial downsides we explore in IV. Quantum computers are not up to the task of providing computational advantages implementing realistic models such as the Heston model [10] that are currently popular with financial industry quants. We therefore suggest in this paper to consider a class of models more realistic than the standard Black-Scholes and more amenable to potential quantum computational advantages than the Heston model.

Another application of interest is credit risk modeling. The Basel II Accord requires financial institutions to assess capital adequacy for credit, market and operational risks. Many institutions implement variations of the so-called asymptotic single risk factor model. Adapting the single asset model of [11] to a portfolio of credits, [12] derived a function that transforms unconditional default probabilities into default probabilities conditional on a single systematic risk factor. Like with option pricing, we introduce a new class of models suitable for current QC technology and at the same time more realistic in terms of applications of interest to financial industry quants. Two state Markov chains are ubiquitous within credit risk calculations to mimic the impact that a bullish or bearish macroeconomic landscape has on a obligors [13]. Quantum computing algorithms for a standard MC credit risk model have recently been developed [14]. We expand upon said model by introducing a two state Markov Chain to account for the impact of a bullish or bearish economy on credit risk.

Similar to other QC implementations, we look to amplitude estimation algorithms which provide a quadratic speedup compared to classical Monte Carlo methods. See [15] for the most recent advances in this area. QAE algorithms like [16], [17], and [18] rely on a state preparation sub circuit $\mathscr{A}$ which prepares a so called objective qubit

The first author acknowledges the financial support from an IBM Global University Program Academic Award. We would like to thank Stefan Woerner for valuable comments and feedback on an earlier draft of the paper. We also thank Nik Stamatopoulos for insightful discussions.

Authorized licensed use limited to: CBS Library. Downloaded on March 31,2026 at 20:31:01 UTC from IEEE Xplore. Restrictions apply.

in the state

$$\mathscr{A}|0\rangle_{(n+1)} = \sqrt{1-a}|\psi_0\rangle_n|0\rangle + \sqrt{a}|\psi_1\rangle_n|1\rangle$$

where the amplitude a is proportional to the solution of the model in question. Developing an accurate state preparation circuit is an essential stepping stone towards quantum advantage in these applications.

In this paper, we introduce an example discrete state Markov Chain model for three different applications. We then combine circuit elements from different parts of the literature to demonstrate how to construct a state preparation circuit for these applications. We then show the accuracy of these circuits on the *ibm_qasm_simulator*, *ibm_torino* Heron processor, and Honeywell H1 processor. While QAE with a quadratic speedup is not yet feasible for models as complex as the ones we study, we demonstrate Maximum Likelihood Amplitude Estimation (MLAE) [18] of a practical example using real world data on the Honeywell H1 processor.

The remainder of the paper is organized as follows. In section II we introduce Markov chain models and their implementation on a gate-based quantum computer.Insection III we study QC algorithms for credit risk models of a static portfolio with regime switching. In section IV we look at quantum circuits for derivative pricing with regime switching. Insection V we create and evaluate a circuit to determine credit risk of a dynamic managed portfolio based on empirical data. In section VI we implement the MLAE of the empirical model on quantum hardware.

II. Markov Regime Switching Environment

We focus on discrete state Markov chain processes. As is typical in financial engineering applications, we start with a continuous time setting. To describe this environment, let $(\Omega, \mathscr{F}, \mathbb{P})$ be the underlying complete probability space and $\{X_t, t \geq 0\}$ be an irreducible Markov chain taking values in $\mathscr{H} := \{1, \ldots, M\}$.

The evolution of X_t for all $j, k \in \mathscr{H}$, $j \neq k$ is given by

$$\mathbb{P}\left(X_{t+dt} = k | X_t = j\right) = \lambda_{jk} dt + o(dt), \tag{1}$$

where $\lambda_{jk} \geq 0 \ \forall$ j $\neq$ k and λ_{jj} = - $\sum_{k \in \mathscr{H} \wedge j \neq k} \lambda_{jk}$. The generating $\mathbb{Q}$-matrix of the chain is $\Lambda^g := \left[\lambda_{jk}\right]$. We think of $\mathbb{Q}$ as the infinitesimal generator of the Markov (see e.g. [19] for details). Then, the discrete state Markov chain for any discrete time increment, say Δt, can be written as $\mathscr{A}$ = $\exp(\mathbb{Q}\Delta t)$, a version of the forward Kolmogorov equation, and according to the Chapman-Kolmogorov equation, the transition density over horizons $k \times \Delta t$ is $\mathscr{A}^k$. Hence, unlike the typical stochastic volatility diffusion model with challenging discretization issues, we have in this case exact transition densities at all discrete sampling intervals.Note the important difference with stochastic volatility diffusion models. For the Markov switching setup we work with discrete state, discrete time stochastic processes that

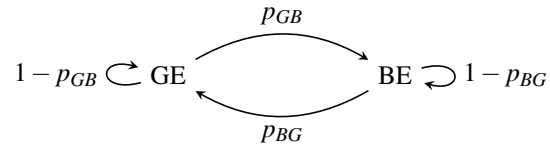

Fig. 1. Diagram of two state Markov chain environment we use for our models. We refer to the states as the Good Economy (GE) and Bad Economy (BE) and the transition probabilities between them as p_{GB} and p_{BG} as depicted in the figure.

have exact transition densities that are relatively easy to implement on gate-based quantum hardware, as we will show shortly. Contrast this with say the Heston model alluded to in the Introduction where simulations are far more challenging to implement on classical as well as quantum hardware. In the remainder of the paper we will demonstrate that the ensuing risk models are appealing for implementation, and they are also more realistic in terms of mimicking financial market conditions. We will typically think of the two state model depicted in 1, although the methods developed here extend to any arbitrary finite number of states. Hence, for simplicity we will assume M = 2, and for convenience one state is called the good economy GE and the other the bad economy BE state. We will assume that both states are observable, to avoid the additional complexities of filtering latent processes.

The first component of both the credit risk and option pricing models is the circuit that loads the probability distribution implied for all possible asset prices in the future into a quantum register such that each basis state represents a possible value and its amplitude the corresponding probability.For the purpose of quantum computing it will be most convenient to describe the Markov process via its transition matrix:

$$\mathscr{A} = \begin{bmatrix} 1-p_{GB} & p_{GB} \\ p_{BG} & 1-p_{BG} \end{bmatrix}, \tag{2}$$

where $1-p_{GB}$ is the probability to stay in the good state, as p_{GB} is the probability to move to the the bad state. Likewise, we have 1 - p_{BG} as the probability to stay in the bad state and p_{BG} is the probability to move to the good state. Again, we can entertain a larger number of discrete Markov states but for our analysis it suffices to use M = 2. Unlike in the continuous time characterization, the elements of transition matrix $\mathscr{A}$ pertain to a particular discrete time sampling frequency. We look at a single-horizon setting and the probabilities correspond to the risk assessment horizon which could be weekly, bi-weekly, monthly, or beyond. To construct the quantum Markov Chain we need the following to characterize various $R_Y(\theta)$ rotation angles. In all of our circuits we use $|0\rangle$ as the good state, and $|1\rangle$ as the bad state. First, θ_0 prepares the 0th qubit in the steady state solution of $\mathscr{A}$. Next, for each qubit i the $|0\rangle$ state controls a rotation of qubit $i+1$ by $\theta^{(0)}$ and

Authorized licensed use limited to: CBS Library. Downloaded on March 31,2026 at 20:31:01 UTC from IEEE Xplore. Restrictions apply.

the $|0\rangle$ state controls a rotation by $\theta^{(1)}$ to simulate the transition probability p_{GB} and p_{BG} respectively. Inspired by [20], we have:

$$\begin{aligned} \theta_0 &= 2\arccos(\sqrt{p_{BG}/(p_{GB}+p_{BG})}) \\ \theta^{(0)} &= 2\arccos(\sqrt{1-p_{GB}}) \\ \theta^{(1)} &= 2\arccos(\sqrt{p_{BG}}) \end{aligned} \tag{3}$$

We replace each sequence of $\theta^{(0)}$ and $\theta^{(1)}$ with an uncontrolled rotation equal to $\theta^{(0)}$, and a controlled application of $\theta^{(1)} - \theta^{(0)}$. Both circuits appear in Figure 2. For our analysis we calculate transition probabilities based on National Bureau of Economic Research US business cycle data from 1986 to 2020.[1] Setting p_{GB} = the number of peaks divided by the number of months of expansion = 0.0097 and p_{BG} = the number of troughs divided by the number of months in recession = 0.11. We assume the process to start from the steady state probability distribution. Therefore: θ_0 = 1.151, $\theta_i^{(0)}$ = 0.311 and finally $\theta_i^{(1)}$ = 2.659.

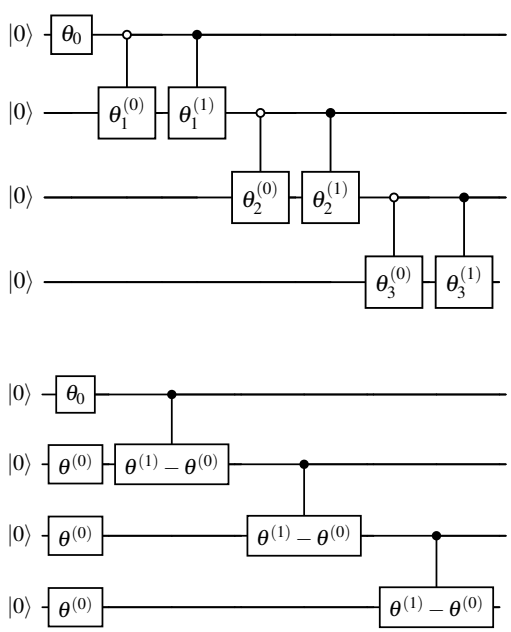

Fig. 2. Quantum Circuit Two-state Three-Period Markov Chain.

The first qubit, $q[0]$ is initialized to a superposition determined by the unconditional or steady state distribution of the Markov chain with probabilities respectively $p_{BG}/(p_{GB}+p_{BG})$ and $1-p_{BG}/(p_{GB}+p_{BG})$, using a $R_Y(\theta_0)$ rotation. The next qubit registers the first period two potential states based on the transition matrix characterized by controlled Y-rotations implemented with `CNOT` and a single-qubit gate determined by respectively $\theta_1^{(0)}$ = 2 $\arccos(\sqrt{p_{BG}})$ and $\theta_1^{(1)} = 2\arccos(\sqrt{1-p_{GB}})$. This pattern is repeated, adding a qubit for each time series observation. Since the transition matrix is time invariant, there are three parameters which drive the circuit: p_{BG}, p_{GB} and the number of time periods T. The first two determine θ_0, $\theta_i^{(0)} = \theta^{(0)}$ and $\theta_i^{(1)} = \theta^{(1)}$ $\forall$ i = 1, $\ldots, T$. We factor the controlled rotations of $\theta^{(0)}$ and $\theta^{(1)}$ into an uncontrolled rotation of $\theta^{(0)}$ and a controlled rotation of $\theta^{(1)}$ which reduces the number of two qubit gates by half. Figure 2 shows an example of a three period Markov chain circuit. The depth of the reduced circuit is equal to T + 1 and therefore driven by the number of time periods.

Future work could incorporate models with heterogeneous Markov chains, or more than two states. If the Markov chain is not homogeneous across time, then each of the $\theta_i^{(0)}$ and $\theta_i^{(1)}$ are functions of i. To represent more than 2 Markov states, each qubit in Figure 2 would be replaced with a quantum register that stores the probability of the N different states with either a binary or one-hot encoding scheme. If we use one-hot encoding, each transition is implemented with a single CRY rotation. As a result, the number of qubits in the circuit scales with $O(M)$, while the complexity scales with $O(M^2)$. Alternatively, we can use binary encoding with the uniformly controlled rotation proposed by [21]. The size of this circuit scales with $O(log(M))$, while the complexity scales with $O(2^M)$ [21]. Despite the better asymptotic scaling, we find that one-hot encoding results in fewer two qubit gates on *ibm_torino* for $M \leq 64$. The exact number of states where binary encoding would become preferable to one-hot encoding is not yet a relevant concern, as even a single time step with $M > 64$ is not feasible on current processors. We return our attention to two state regimes for the remainder of our work.

To compute the Mean-Squared Error (MSE) for different parameter settings for the QC Circuit, let us define (a) B as the number of bins in the histogram of computational basis states - namely $B = 2^{T+1}$, (b) S the number of shots used to compute the histogram and (c) N the number of Monte Carlo simulations. Moreover, let $p(b)$, b = 0, $\ldots$, $B-1$ be the true probabilities implied by the model and $o_{ns} \in 1, \ldots, B$ as the outcome of shot s of iteration n. Then the MSE is defined as:

$$\text{MSE} = \frac{1}{N}\sum_{n=1}^{N}\left[\frac{1}{B}\sum_{b=1}^{B}[\bar{p}_n(b) - p(b)]^2\right], \tag{4}$$

where $\bar{p}_n(b) = \frac{1}{S}\sum_{s=1}^{S}\delta_{o_{ns},b}$ with $\delta_{o_{ns},b}$ the Dirac delta function.

In Table I we report the Mean-Squared Error (MSE) for different parameter settings. We consider T = 3, 6, 12 and 24. In addition to the aforementioned transition probabilities, we chose sythetic probabilities p_{GB} = 0.3 and p_{BG} = 0.4 to demonstrate the impact of a Markov Chain with higher transition probabilities. All values were calculated N = 64 and S = 1028. We used the standard [22] M3 readout error mitigation and the circuit depth optimization heuristic. The results in Table I indicate that

[1]The detailed chronology appears in https://www.nber.org/research/business-cycle-dating.

Authorized licensed use limited to: CBS Library. Downloaded on March 31,2026 at 20:31:01 UTC from IEEE Xplore. Restrictions apply.

TABLE I

MEAN-SQUARED ERROR (MSE) OF QC CIRCUIT TWO-STATE T-PERIOD MARKOV CHAIN EVALUATED ON *ibmq_qasm_simulator* SIMULATOR AND *ibm_brisbane* QUANTUM PROCESSOR. WE EVALUATE THE ACCURACY OF THE CIRCUIT USING ONE MONTH TRANSITION PROBABILITIES TAKEN FROM 1986-PRESENT (p_{GB} = 0.0097 AND p_{BG} = 0.11), AND A SYNTHETIC CASE (p_{GB} = 0.3 AND p_{BG} = 0.4).

Time steps	1986-present Simulator	Synthetic Simulator	1986-present Quantum	Synthetic Quantum
3	2.8e-4	1.3e-05	1.2e-4	5.6e-5
6	5.8e-5	3.8e-6	3.3e-4	4.9e-6
12	9.6e-6	1.9e-7	8.3e-4	1.7e-7
24	2.0e-6	6.2e-8	8.7e-5	6.2e-8

Markov chain state is quite accurately prepared by our outlined circuit. In all examples the change in the MSE across multiple time steps is dominated by the exponential growth in the number of bins, and the linear decrease in number of shots expected in the most likely bins. We found that the circuit is more accurate when calculating the Markov chain state for larger transition probabilities. This is because two opposite errors on the same shot are more likely to result in an accurate final state when said final state represents a wider Markov chain distribution.

III. CREDIT RISK WITH REGIME SWITCHING

Now we know how to handle QC of Markov chain discrete state models, we turn to their first application in the context of a credit risk model. In a portfolio of millions of assets, it is common to group obligors together to form homogeneous groups. The most natural grouping is based on credit ratings. This can be very coarse, like pooling some of the 9 standard Moody's ratings (Aaa, Aa, A, Baa, Ba, B, Caa, Ca, and C) or more granular, like expanding say Aa into Aa1, Aa2, Aa3, etc. Another example involves tranches of structured financial products, such as Collateralized bond obligations (CBOs), Collateralized mortgage obligations (CMOs), Collateralized debt obligations (CDOs), etc. We will assume that there are G homogeneous groups of obligors in the portfolio and first analyze each group separately and then cover dependence across the groups. We assume that the different credit risk groups g share the same two-state Markov chain X_t. The value of each asset belonging to group $g \in \{1,\ldots,G\}$ is among other things, as discussed shortly, dependent on a discrete state Markov process describing the economic environment. Group g comprises of O_g obligors. For simplicity we will assume that $O_g = O \;\forall\; g = 1, \ldots, G$. Conditional on state X_t for group g the value of assets k at time t in logarithmic form is determined as:

$$\begin{aligned} d\ln A^g_{k,t}(X_t) &= \left(\mu_g(X_t) - \frac{1}{2}\sigma_g(X_t)^2\right)dt \\ &\qquad + \sigma_g(X_t)d\tilde{W}^g_{k,t} \\ d\tilde{W}^g_{k,t} &= \sqrt{\rho_g(X_t)}dW^g_t + \sqrt{1-\rho_g(X_t)}dZ^g_{k,t} \end{aligned}$$

The above is a Markov switching Gaussian conditional independence model where dW^g_t is a (group-specific) Gaussian latent factor common among all assets in group g.

Continuing with the two state setting for each group g we can think of the following parameter settings:

State X_t	1 (good)	2 (bad)
$\mu_g(X_t)$	High	Low
$\sigma_g(X_t)^2$	Low	High
$\rho_g(X_t)$	Low	High

where "High" and "Low" are calibrated according to the risk profile of group g. For a portfolio of O obligors the multivariate random variable $\left(\lambda^g_1,\ldots,\lambda^g_O\right) \in \mathbb{R}^O_+$ denotes loss given default associated to each obligor in group g. Denote the probability of default for obligor n in group g given the latent factor dW^g_t as $p_k(dW^g_t)$. We are interested in the Value at Risk (V@R) for a given confidence level $\alpha \in (0,1)$ which is defined as the smallest total loss that still has a probability greater than or equal to α

$$\begin{aligned} \mathrm{V@R}_\alpha(\mathscr{L}^g) &= \inf_{x\geq 0}\left[x \,|\, \mathbb{P}(\mathscr{L}^g \leq x) \geq \alpha\right] \\ \mathscr{L}^g &= \sum_{o=1}^{O} \lambda^g_o p_o(dW^g_t) \end{aligned}$$

Assuming conditional independence given a single systematic risk factor, [12] derived the parametric loss distribution function of an asymptotic, homogeneous credit portfolio. We apply this asymptotic framework to each group separately, and therefore assume that each group consists of a large set of homogeneous obligors. By this we mean more specifically:

- As we already assumed, the drift, volatility and correlation $\mu_g(X_t)$, $\sigma_g(X_t)$, and $\rho_g(X_t)$, are homogeneous within each group and hence are group-specific functions of the state
- Obligors are assigned the same unconditional probability of default p_g and the same loss given default λ^g

Authorized licensed use limited to: CBS Library. Downloaded on March 31,2026 at 20:31:01 UTC from IEEE Xplore. Restrictions apply.

Conditional on state X_t and the latent factor the default probability is:

$$p(dW_t^g, X_t) = \Phi\left(\frac{\Phi^{-1}(p_g) - \sqrt{\rho_g(X_t)}dW_t^g}{\sqrt{1-\rho_g(X_t)}}\right)$$

where Φ is the cumulative standard Gaussian density function. In the two-state case, the probability of default conditional on the latent factor and the prior state is:

$$\begin{aligned} p(dW_t^g|X_{t-}^g) &= p(X_t = 1|X_{t-}^g)p(X_t = 1, dW_t^g) \\ &\quad + p(X_t = 2|X_{t-}^g)p(X_t = 2, dW_t^g) \end{aligned}$$

For the subsequent analysis it will be easier to assume that the states of the Markov chain are ex post observable. If those states are instead latent, then we need to add a (Bayesian) prior distribution $\mathscr{P}_{t-}$ on the t_- state. In that case, the previous formula simply becomes:

$$\begin{aligned} p(dW_t^g|\mathscr{P}_{t-}) &= \sum_j \sum_k p(X_t = j, dW_t^g) \\ &\quad \times p(X_t = k|X_{t-}^g = j)\mathscr{P}_{t-}(X_{t-}^g = j) \end{aligned}$$

We follow [3] and [14], extending their work to the setting of Markov regime switching. Since the expected total loss $\mathbb{E}[\mathscr{L}^g]$ can be efficiently computed classically [3] and [14] focus on quantum algorithms to estimate $\mathrm{V@R}_\alpha(\mathscr{L}^g)$. We first review the cases without Markov switching considered by [14]. In their case, mapping the CDF of the total loss to a quantum operator $\mathscr{A}$ requires three steps. Each step corresponds to a quantum operator:

- First, $\mathscr{U}$ loads the uncertainty model
- Second, $\mathscr{S}$ computes the total loss into a quantum register with n_S qubits
- Last, $\mathscr{C}$ flips a target qubit if the total loss is less than or equal to a given level x which is used to search for V@R

At a high level we have $\mathscr{A} = \mathscr{C}\mathscr{S}\mathscr{U}$ with the corresponding circuit appearing in Figure 3, which extends Figure 1 from [14] to a Markov regime switching setting.

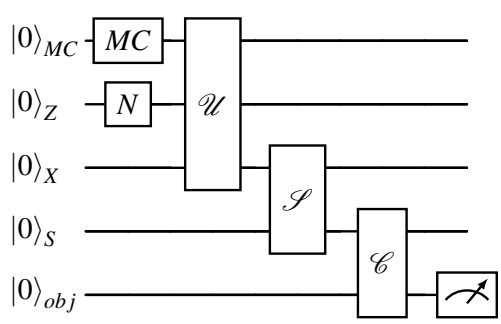

Fig. 3. High level diagram of the static credit risk state preparation circuit. The probability of the meter measuring $|1\rangle$ is equal to the confidence interval α of a given loss value $\mathscr{L}$. The MC gate is shown in Figure 2. The N gate is a normal distribution with $2^{n_Z} - 1$ values, where n_Z is the number of qubits in the Z register. We chose n_Z = 3, mean = 3.5, and standard deviation = 1.5.

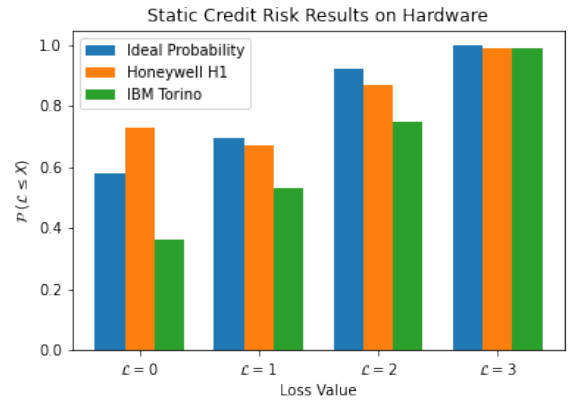

Fig. 4. Bar Graph showing the $|1\rangle$ measurement probability of the objective qubit of the static credit risk circuit on a ideal processor, as well as the two processors we study. To compare the overall accuracy of this application on hardware, we calculate the MSE using the formula in 4 using 64 iterations consisting of 64 shots. We take the average across four values of $\mathscr{L}$ to find a MSE of 0.0326 on *ibm_torino* and 0.0425 on Honeywell H1. The average circuit depth for this application is 4547 on *ibm_torino* and 722 on Honeywell H1.

Regarding the $\mathscr{U}$ operator, we encode the default events for each obligor k in the state of a corresponding qubit by applying to qubit k a Y-rotation $R_Y(\theta_g)$ with angle θ_g = $2\arcsin(p(dW_t^g, X_t))$. Note that the default probabilities and sensitivities are Markov chain state-dependent. Thus, in the case of two states we need to encode two probability schemes, leading to the following modification of the original algorithm (assuming as noted earlier that Markov states are ex post observable):

$$\mathscr{U} = \sqrt{p(X_t = 1|X_{t-}^g)}\mathscr{U}_1 + \sqrt{(1 - p(X_t = 1|X_{t-}^g))}\mathscr{U}_2 \quad (5)$$

where $\mathscr{U}_j$ encodes the default probabilities in Markov state $X_t = j$. In our case, $\mathscr{U}_{GE}$ is constructed using default probability GEp_g and sensitivity GEp_g, while $\mathscr{U}_{GE}$ uses GEp_g and GEp_g respectively. Like [14], we use a truncated and discretized approximation of dW_k^g with $2^{n_Z} - 1$ values, considering an affine mapping $dW_k^g = a_w k + b_w$ from $k \in \{0, 1, \ldots, 2^{N_Z} - 1\}$ to the desired range of values for the latent factor. The probability of default for a given group g could be encoded into the $|1\rangle$ amplitude of the group's corresponding qubit X^g using controlled y rotations with $\theta_p^g(z) = 2\arcsin\left(\sqrt{p\left(dW_t^g, X_t\right)}\right)$ controlled by each possible state in our mapping of dW_k^g. We classically compute the first order Taylor approximation $\theta_p^k \approx a_g z + b_g$ which can be efficiently mapped with a Pauli polynomial circuit. With the redefined $\mathscr{U}$ operator, the other operators $\mathscr{S}$ and $\mathscr{C}$ are the same as in [14]. The Markov chain operations for a single group can be implemented (assuming 2 states) using a controlled nth root Pauli X-gate $C\sqrt[n]{X}$ (see [23]). We show the results of this circuit for a variety of parameters on IBM and Honeywell quantum processors in Figure 4. The procedure computes the probability α for an input loss value $\mathscr{L}$. We expand on [14] by implementing this circuit on real quantum processors, as opposed to a

Authorized licensed use limited to: CBS Library. Downloaded on March 31,2026 at 20:31:01 UTC from IEEE Xplore. Restrictions apply.

simulator, the results of which can be seen in Table 4. In most applications, the quantity of interest is $\mathscr{L}$ given α. Our circuit can be used to find $\mathscr{L}$ in a simple binary search which scales in $\mathscr{O}(\log n)$ time [14].

IV. Derivative Pricing with Switching Regime

Financial derivatives, such as option contracts, are valid for a predetermined period of time and their value at the expiration date is called the payoff. Option pricing consists of determining the payoff at the expiration date in the future and then discount that value to determine its fair value today. A number of papers have explored quantum computing algorithms for some extensions beyond the Geometric Brownian Motion model of Black-Scholes, often encountered in financial applications. In particular, [8] consider the local volatility model of [24] which features time-varying volatility and captures some empirical features of option markets - in particular the so called smile. However, the local volatility model has some unappealing properties, notably a volatility process which is a linear function of time (and the price level) and is therefore unbounded. Also related is [9] who introduce an approach to simplify state preparation, together with a circuit optimization technique, both of which can help reduce the circuit complexity for state preparation significantly and apply their approach to pricing European-style options under the Heston [10] stochastic volatility model. The model is the most popular stochastic volatility model for market practitioners because of its analytic tractability in computing the prices of European options. For pricing path-dependent options under the model, Monte Carlo simulations are often used. However, the standard Euler and Milstein time discretization simulation schemes for the continuous time diffusion models suffer from biases due to a multitude of reasons. First, discretizations may yield negative values of the stochastic variance process which are typically set to zero before taking the square root. Second, the square root function violates the Lipschitz condition; therefore, the convergence properties of the discretization scheme may not be guaranteed. Third, the parameters of the diffusion model and those of its Euler or Milstein discretizations are not the same, but biases of the discretization schemes vanish as the sampling of the Euler/Milstein schemes increases in frequency. Financial econometricians usually handle this with dense high frequency sampling, i.e., sample say every 5 minutes in a 24-hour market, that means 288 steps for a single day on a classical computer. On a quantum computer we do not yet have the luxury to do that type of simulation, so the sampling remains coarse and therefore the discretization bias is severe. Finally, another issue with the Heston or related models is the latent volatility process. Typically it is assumed that volatility is observable. Heston took the same route and argued that near-term at-the-money BS implied volatilities could serve as plug-in values, but this also has issues - see [7] for further discussion. Quantum computers are not up to the task of providing computational advantages along any of the aforementioned challenges.

We therefore study derivative pricing in a setting involving a state-of-the-economy process X_t which is a discrete time discrete state space Markov chain. Once the state of economy is given, stock prices evolve according to some laws of motion which ultimately determine the value of an option. More formally, let $(\Omega, \mathscr{F}, \mathbb{P})$ be the underlying complete probability space and $\{X_t, t \geq 0\}$ be an irreducible Markov chain taking values in $\mathscr{H} := \{1, \ldots, M\}$ as described in equation (1). An instantaneous risk-free asset is available defined by the mapping $r : \mathscr{H} \to [0, \infty)$ and therefore $r(X_t)$ is an irreducible Markov chain taking values in $\mathscr{R} := \{r(1), \ldots, r(M)\}$ with the same generating matrix Λ. Also of interest is the process:

$$dB_t = r(X_t)B_t dt \quad B_0 = 1 \quad \Rightarrow B_t = \exp\left(\int_0^t r(X_t)dt\right).$$

The time variation of the risky asset price $\{S_t, t \geq 0\}$ under $\mathbb{P}$ is governed by:

$$dS_t = \mu(X_t)S_t dt + \sigma(X_t)S_t dW_t,$$

with W_t a standard Weiner process and the functions μ and σ are Lipschitz and satisfy: $\int_0^t |\mu(X_t)|dt < \infty$, $\int_0^t |\sigma(X_t)|^2 d\tau < \infty$ almost surely.

From [25] we know that the joint process $\{S_t, X_t\}$ is a Feller Markov process. In addition, let $\mathscr{F}_t := \sigma[S_t, X_t, t \geq 0]$ be the natural sigma filtration assumed to be right continuous and $\mathbb{P}$-complete. The sigma filtration $\mathscr{F}_t$ induces a conditional probability measure $\mathbb{P}_t$. Under complete markets there is a unique risk neutral density exists and is related to the physical probability measure $\mathbb{P}_t$ via the Radon-Nikodym derivative: $\frac{d\mathbb{P}_t^*}{d\mathbb{P}_t} = \exp\left[-\int_0^t \frac{\mu(X_s)-r(X_s)}{\sigma(X_s)} dW_s - \frac{1}{2}\int_0^t \left(\frac{\mu(X_s)-r(X_s)}{\sigma(X_s)}\right)^2 ds\right]$. Derivatives are priced according to

$$dS_t = r(X_t)S_t dt + \sigma(X_t)S_t dW_t^*$$

where $W_t^* = W_t + \int_0^t (\mu(X_s) - r(X_s))/\sigma(X_s)ds$. To proceed we characterize the asset price dynamics in terms of log returns, which is accomplished via applying Itô's Lemma:

$$d\ln S_t = \left(r(X_t) - \frac{1}{2}\sigma(X_t)^2\right)dt + \sigma(X_t)dW_t^*.$$

Consider a European-style option with payoff at some future time T and strike price K. The future payoff of such a contract is $(S_T - K)^+$ and current market price for the option is equal to

$$C(t, T, K, X_t, S_t) = \mathbb{E}^*\left[e^{-\int_t^T r(X_s)ds}(S_T - K)^+ | \mathscr{F}_t\right]$$

[26] and [27] show that the option price satisfies a system of Black–Scholes partial differential equations with weak coupling. In the special case of two states, [28] derive an easy exact solution for pricing European-style options. The virtue of this model, as well as the credit risk model in

Authorized licensed use limited to: CBS Library. Downloaded on March 31,2026 at 20:31:01 UTC from IEEE Xplore. Restrictions apply.

the previous section is that while they are formulated in continuous time, we do know, conditional on information at time t, the implied discrete time probability density of S_T for any $T > t$. Namely, this distribution is log-normal and is the reason why the Black-Scholes option pricing model has a known analytical solution. Here, however, we are dealing with an additional source of uncertainty, namely the discrete state Markov chain. Conditional on observing the state at time t we have exact solutions for each regime. This discrete state stochastic environment facilitates implementation on quantum computers.

We compute the case without the Markov chain by using the portion of the circuit outlined in [29] that simulates the change in the asset price, and the standard Linear Amplitude payoff function available in *Qiskit* [30]. In this model, r and σ are constant, and therefore the two possible changes in price are:

$$d\ln S_{ut} = (r - \frac{1}{2}\sigma^2)dt + \sigma \qquad d\ln S_{dt} = (r - \frac{1}{2}\sigma^2)dt - \sigma$$

The operator which simulates the changes in price over a given period, $\mathscr{C}$, consists of two registers. Register $\mathscr{B}$ prepares the Brownian motion variable dW_t for each time step, while $\mathscr{P}$ holds the price of the underlying asset. The size of the latter determines how many binary decimal places will be used to store the final stock price distribution. Changes in price are calculated in log space using the Fourier basis until the end of this circuit. We use operator $\mathscr{D}$ inspired by [31] to add a constant to $\mathscr{P}$ in the Fourier basis. $\mathscr{C}$ consists of the following steps:

- A single Hadamard gate to each qubit in $\mathscr{B}$ simulates Brownian motion
- A QFT transforms $\mathscr{P}$ into the Fourier basis
- $\mathscr{D}_{S_0}$ adds the log of the initial stock value S_0
- An application of $\mathscr{D}_{\ln S_{ut}}$ and $\mathscr{D}_{\ln S_{dt}}$ controlled on the $|0\rangle$ and $|1\rangle$ states respectively of each qubit in $\mathscr{B}$. See 6
- $\mathscr{D}_1$ converts $\mathscr{P}$ from log space to normal space using the first order Taylor approximation $x \approx 1 + \ln x$
- An iQFT transforms $\mathscr{P}$ back to the computational basis

Once the probability of all possible stock prices are loaded into $\mathscr{P}$, a quantum linear amplitude function $F|x\rangle$ computes

$$F|x\rangle|0\rangle = \sqrt{1-\hat{f}(x)}\,|x\rangle|0\rangle + \sqrt{\hat{f}(x)}\,|x\rangle|1\rangle, \qquad (6)$$

where $\hat{f}$ is an affine mapping of the payoff of a European call option

$$f = \left\{ \begin{array}{ll} 0, & \text{if } x \leq \text{strike} \\ x - \text{strike}, & \text{if } x > \text{strike} \end{array} \right\}. \qquad (7)$$

Following [3], the mapping $\hat{f}$ is scaled down to leverage the small angle approximation $\sin^2\left(y + \frac{\pi}{4}\right) \approx y + \frac{1}{2}$ for sufficiently small y. The operator F uses an additional register which is prepared to equal the strike price. Next, a quantum integer comparator is applied to $\mathscr{P}$ and the strike price register. The result of this comparator is stored in an ancilla qubit which is then used to control a Pauli polynomial rotation that applies $F|x\rangle$ to the objective qubit for all $|x\rangle$ greater than the strike price. Figure 5 shows an overview of the complete derivative pricing circuit.

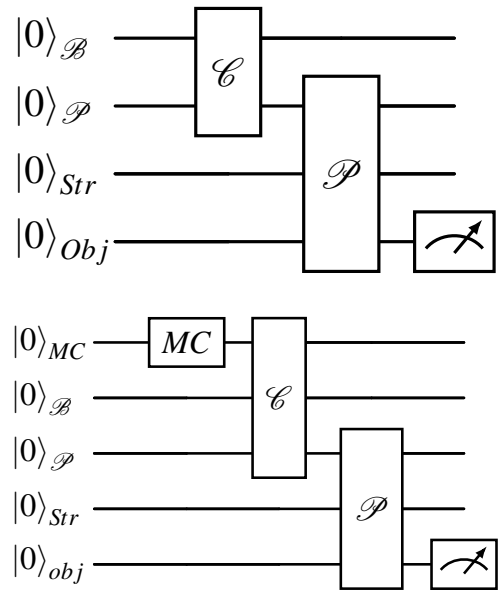

Fig. 5. High level diagram of the Derivative Pricing circuit for the basic model (top) and regime switching (bottom). One time step of gate $\mathscr{C}$ for each model can be seen in Figure 6.

The Markov chain version of the model can be implemented via a similar circuit with the addition of the operator outlined in section II and a modification to $\mathscr{C}$. In the Markov chain version, the fourth step of $\mathscr{C}$ is converted from two controlled applications of $\mathscr{D}_{\ln S}$, to four multi-controlled applications of the same gate: one for each combination of the economic state variable X_t and Brownian motion variable dW_t. See a comparison of the two gates in Figure 6.

We test our algorithm using the parameters in Table II. All experiments used 3 time steps, S_0 = 1.0, T = six months, and strike prices 0.9, 0.95, 1.0, 1.05, and 1.1. We benchmark against an exact solution classically calculated with no sampling error, which was feasible thanks to the relatively short chain. We show the MSE of our results for S = 128, B = 5, and N = 100 in Table III. Of the circuits outlined in this paper, the credit risk application is a stronger candidate for usable Amplitude Estimation result on current processors, as demonstrated for the non-regime switching model in [3]. The payoff function for derivative pricing yields a measurement probability *prob*, which is converted into the solution via the classical post

Authorized licensed use limited to: CBS Library. Downloaded on March 31,2026 at 20:31:01 UTC from IEEE Xplore. Restrictions apply.

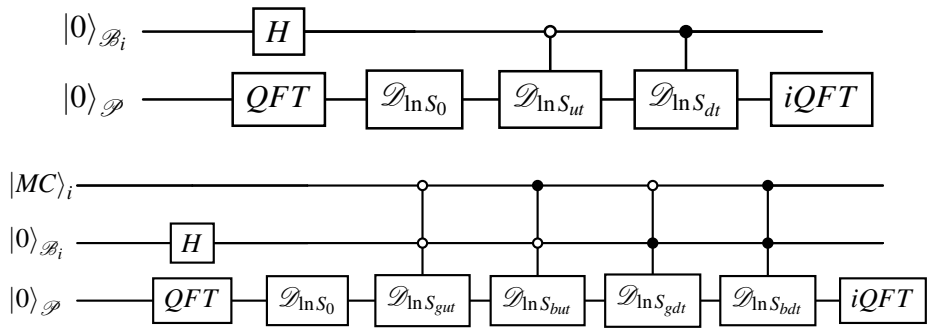

Fig. 6. Circuit diagram of one time step of $\mathscr{C}$ in the case without (top) and with (bottom) regime switching. The values of $\ln S_{xy}$ come from equation 6, while the values of $\ln S_{xyz}$ can be derived using IV for x $\in$ good economy g or bad ecomony b, and y $\in$ up u or down d Brownian motion.

TABLE II
DERIVATIVE PRICING MODEL PARAMETERS. WE LABEL THE STATE DEPENDENT DEFAULT PROBABILITY RISK FREE INTEREST RATE r AND VOLATILITY σ FOR THE GOOD ECONOMY (GE) AND BAD ECONOMY (BE) REGIMES RESPECTIVELY.

Regime Switching	$GE\sigma$	$BE\sigma$	GEr	BEr
No	0.2 + min(max(1.2t,0),0.1)	–	0.1	–
Yes	0.2 + min(max(1.2t,0),0.1)	0.3 + min(max(1.2t,0),0.1)	0.2	0.1

processing

$$\text{Price} = \frac{2f_{max}}{\pi c}\left(prob - \frac{1}{2} + \frac{c\pi}{4}\right),$$

where f_{max} is the highest payout possible given the strike price and the confines of the $\mathscr{P}$ register, and c is a re-scaling constant required to make use of the small angle approximation. Choosing a smaller value for c decreases the approximation error, however it increases the sampling error of whichever amplitude estimation method is used since for a given change in measurement probability $\Delta prob$, the change in derivative price $\Delta\text{price} \propto 1/c$. On an ideal quantum processor, the optimal choice of c results in a total error that scales with $\mathscr{O}\left(M^{-\frac{2}{3}}\right)$ as opposed to $\mathscr{O}\left(M^{-1}\right)$ for the credit risk example. More research needs to be done to determine the optimal choice of scaling constant when qubit errors from real quantum hardware is taken into account.

V. A Practical Implementation Example

We consider a practical implementation of credit risk, computing the V@R for a portfolio of risky corporate bonds. More specifically, we look at a portfolio mix of Aaa and Baa bonds. We use indices to reflect the prices of these type of bonds and collect Aaa and Baa monthly series from 1986 until end of 2022 called respectively Aaa_t and Baa_t.[2] Again using the NBER business cycle chronology, we define $r_t^b = 1 + Baa_t$ and $r_t^a = 1 + Aaa_t$ and compute means and standard deviations of r_t^b and r_t^a during NBER expansions only. We call the NBER expansions the good economy GE states and recessions the BE ones. And therefore we use this me_a^G, me_b^G, for the means of a and b, and sd_a^G and finally sd_b^G for the standard deviations. We compute the same statistics for NBER recessions, call these me_a^B, me_b^B, sd_a^B and sd_b^B. Finally, we compute the correlation between r_t^b and r_t^a during NBER expansions only, call it ρ^G amd during recessions only ρ^B. Define:

$$\Sigma^G = \begin{bmatrix} (sd_a^G)^2 & sd_a^G sd_b^G \rho^G \\ sd_a^G sd_b^G \rho^G & (sd_b^G)^2 \end{bmatrix}$$
$$\Sigma^B = \begin{bmatrix} (sd_a^B)^2 & sd_a^B sd_b^B \rho^B \\ sd_a^B sd_b^B \rho^B & (sd_b^B)^2 \end{bmatrix}$$
$$\mu^G = \begin{bmatrix} me_a^G \\ me_b^G \end{bmatrix} \quad \mu^B = \begin{bmatrix} me_a^B \\ me_b^B \end{bmatrix}$$

We use the generic stationary two-state Markov setting where the states are observable with Good and Bad outcomes and their associated transition probabilities.[3] Then a Markowitz mean-variance portfolio, see [32], can be

[2]Data sources are for the Aaa series, https://fred.stlouisfed.org/series/AAA10Y, and for the Baa: https://fred.stlouisfed.org/series/BAA10Y

[3]Making the NBER chronology an observable state in real-time is a simplification. Usually the NBER calls recessions and expansion states with some time delay.

Authorized licensed use limited to: CBS Library. Downloaded on March 31,2026 at 20:31:01 UTC from IEEE Xplore. Restrictions apply.

TABLE III
DERIVATIVE PRICING MODEL MSE AND CIRCUIT DEPTH FOR THE MODEL PARAMETERS OUTLINED IN TABLE II. THE MSE IS CALCULATED BASED ON THE IDEAL MEASUREMENT PROBABILITY, AND NOT THE MODEL SOLUTION.

Processor	MSE	Circuit Depth
ibm_torino	0.0326	5504
Honeywell H1	0.00890	588

formulated as follows:

$$\max_{w_{t+1}(X_t)} \left[w_{t+1}(X_t)^\top \mu^G - \lambda w_{t+1}(X_t)^\top \Sigma^G w_{t+1}(X_t) \right] \times p(X_{t+1} = G|X_t) + \left[w_{t+1}(X_t)^\top \mu^B - \lambda w_{t+1}(X_t)^\top \Sigma^B w_{t+1}(X_t) \right] \times p(X_{t+1} = B|X_t)$$
$$\text{subject to } \iota^\top w_{t+1}(X_t) = 1$$

where ι is a $n \times 1$ vector of ones (n the number of assets), which has the following closed-form solution:

$$\begin{aligned} w_{t+1}(X_t) &= \frac{1}{2\lambda}\left[(\Sigma^G)^{-1}(\mu^G + \nu^G \iota) p(X_{t+1} = G|X_t)\right] \\ &\quad + \frac{1}{2\lambda}\left[(\Sigma^B)^{-1}(\mu^B + \nu^B \iota) p(X_{t+1} = B|X_t)\right] \\ \nu^G &= \frac{2\lambda - \iota^\top (\Sigma^G)^{-1}\mu^G}{\iota^\top (\Sigma^G)^{-1}\iota} \\ \nu^B &= \frac{2\lambda - \iota^\top (\Sigma^B)^{-1}\mu^B}{\iota^\top (\Sigma^B)^{-1}\iota} \end{aligned}$$

where we provide in Table IV a summary of the sample-based numerical values used in our computations. We are dealing with a stationary Markov chain with $p_{GB} = p(X_{t+1} = B|X_t = G)$, $p_{BG} = p(X_{t+1} = G|X_t = B)$. Therefore the portfolio weights take a stationary solution only depending on the state with for w_a^G for Aaa bonds, w_b^G = 1 - w_a^G for Baa bonds for the G state , whereas for B states we have w_a^B and w_b^B = 1 - w_a^B. As with the static portfolio example, the problem of interest is to find $\mathscr{L}$ for a given α, where α is the confidence interval that the loss over a given time horizon will not exceed $\mathscr{L}$. Before modeling the V@R of a mean variance of a dynamic portfolio managed with a given risk aversion, we classically re-scale the problem to reduce the number of qubits needed for the quantum calculation. The expected growth of the portfolio over one month is $g_G = (w^G)^\top \mu^G$ in the good regime and $g_B = (w^B)^\top \mu^B$ in the BE regime. Let the relative growth be $rg = g_G - g_B$. We define the relative loss $\mathscr{L}' = \mathscr{L} - \mathscr{L}_max$ where $\mathscr{L}_max = g_B \times T$ or the loss in the worst possible outcome within the confines of the model. The quantum portion of the algorithm computes α of $\mathscr{L}'$ for a portfolio that grows by rg in the GE and does not change in the BE. If $g_G < g_B$ for the portfolio being studied, then the place of GE and BE are swapped in the above calculation. Our circuit for this application shown in Figure 8 starts with a Markov Chain and a QFT of the total growth register

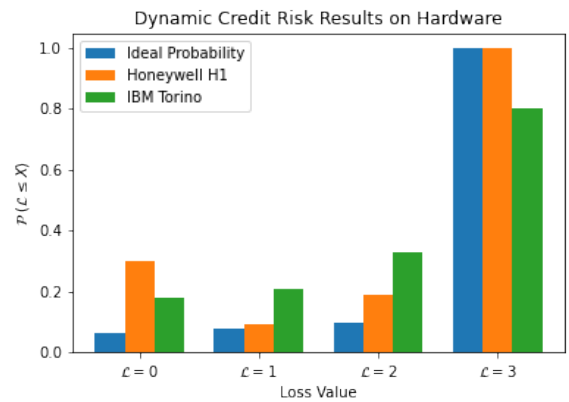

Fig. 7. Bar Graph showing the $|1\rangle$ measurement probability of the objective qubit of the dynamic credit risk circuit on a ideal processor, as well as the two processors we study. To compare the overall accuracy of this application on hardware, we simulate the MSE using the formula in 4 using 64 iterations. We take the average across four values of $\mathscr{L}$ to find a MSE of 0.0205 on *ibm_torino* and 0.00148 on Honeywell H1.

$\mathscr{G}$. The number of qubits in $\mathscr{G}$ is equal to the number of fractional binary digits chosen plus $\log_2(rg * T) + 1$ rounded up to the next integer. This assures that $\mathscr{G}$ can accommodate the highest possible relative growth over the time period T without overflow. Next, we use the GE state of each time step in $\mathscr{MC}$ to control an addition of rg to $\mathscr{G}$ using the $\mathscr{D}$ operator outlined in section IV. This creates a probability distribution of all possible growths. We then subtract $\mathscr{L}'$ from $\mathscr{G}$ and apply an IQFT to return to the computational basis. At the end of this circuit, the probability that $\mathscr{G} < 0$ is equal to the alpha. Draper QFT addition uses Two's complement to store negative numbers, thus the sign qubit of $\mathscr{G}$ serves as the objective bit of the state prep circuit.

We show the results of our tests on this circuit in Figure 7. This application is where we see the greatest difference between the performance of the two processors. We confirmed that the higher gate fidelity and end-to-end connectivity of the Honeywell H1 processor result in a lower MSE of the state preparation measurement, and more accurate Amplitude Estimation. Quantum hardware will need to implement these discrete state models with a realistic number of time steps in order to provide a useful advantage in this sector. While Honeywell's hardware provides more accurate results today, the largest Honeywell processor (H2) has only 32 qubits to work

Authorized licensed use limited to: CBS Library. Downloaded on March 31,2026 at 20:31:01 UTC from IEEE Xplore. Restrictions apply.

TABLE IV

USING THE NATIONAL BUREAU OF ECONOMIC RESEARCH US BUSINESS CYCLE DATA FROM 1986 TO 2020, THE TABLE CONTAINS THE PARAMETERS USED FOR A MARKOWITZ MEAN-VARIANCE PORTFOLIO MIX OF AAA AND BAA BONDS. DENOTE INDICES TO REFLECTING THE PRICES OF THESE TYPE OF BONDS AS Aaa_t AND Baa_t AND DEFINE $r_t^b = 1 + Baa_t$ AND $r_t^a = 1 + Aaa_t$. WE CALL THE NBER EXPANSIONS THE 'GOOD' STATES AND RECESSIONS THE 'BAD' ONES.

me_a^G	2.31	me_b^G	3.23	me_a^B	2.78	me_B^G	4.33
sd_a^G	0.42	sd_b^G	0.56	sd_a^B	0.62	sd_b^B	1.24
ρ^G	0.91	ρ^B	0.85	p_{GB}	0.0097	p_{BG}	0.11
w_a^G	0.81	w_b^G	0.19	w_a^B	1.3	w_b^B	-0.3

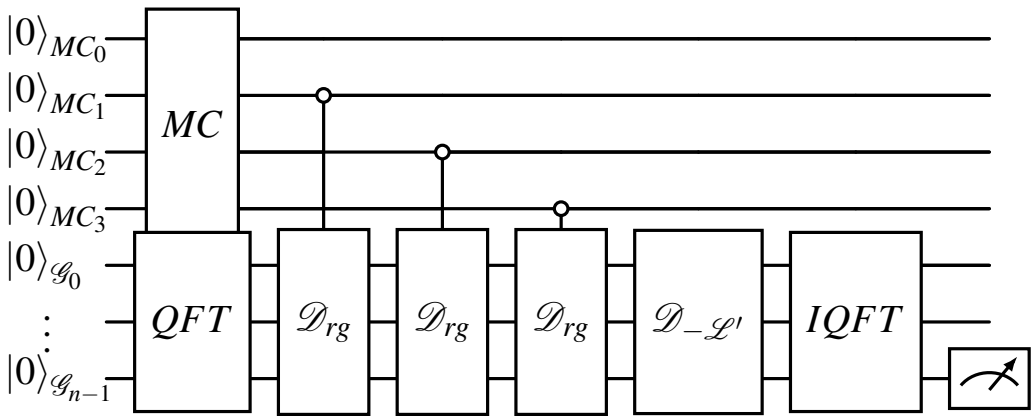

Fig. 8. Diagram of a quantum circuit evaluating a three time step dynamic portfolio credit risk model.

TABLE V

WE SHOW THE RESULTS AND RESOURCES USED FOR MLAE OF $\alpha_{\mathscr{L}=1}$ IN THE THREE TIME STEP EXAMPLE USING REAL WORLD DATA. THE TRUE SOLUTION TO THIS MODEL IS 0.0795.

Processor	Estimate	95% CI	Error	Oracle Queries
IBM Torino	0.485	$\pm$ 0.00288	0.407	28,000
Honeywell H1	0.0524	$\pm$ 0.00405	0.0230	700

with, while *ibm_torino* offers 127 qubits. Even a modest two year Markov Chain evaluated at monthly intervals requires 25 qubits. For this reason, we are interested in superconducting processors. Markov chain models require that each qubit representing an economic state interact with each qubit in the register representing the total change of the model being evaluated (the $\mathscr{S}$, $\mathscr{P}$, and $\mathscr{G}$ registers respectively.) This poses a particular challenge for routing on limited connectivity processors. Circuit routing advancements like [33] provide a marginal decrease in the circuit depths of the state prep circuits we tested, however the resulting circuit is still well to large to implement with a reasonable degree of accuracy. If trapped Ion processors do not scale to accommodate realistic Markov chains, we look to future advancements in superconducting qubit fidelity and circuit routing algorithms to provide a quantum advantage for regime switching models.

VI. AMPLITUDE ESTIMATION

The approximation error of repeatedly measuring the objective qubit of the state preparation circuits we have outlined is equivalent to that of a classical Monte Carlo. A theoretical quantum advantage can be achieved with Quantum Ampltidue Estimation (QAE), or one of its variants discussed shortly. To apply the canonical QAE algorithm we map the problem of interest to a quantum operator, namely a unitary operator $\mathscr{A}$ acting on a register of $n+1$ qubits such that

$$\mathscr{A}|0\rangle_{(n+1)} = \sqrt{1-a}|\psi_0\rangle_n|0\rangle + \sqrt{a}|\psi_1\rangle_n|1\rangle$$

for some normalized states $|\psi_0\rangle_n$ and $|\psi_1\rangle_n$, where $a \in [0,1]$ is unknown. QAE allows the efficient estimation of a, i.e., the probability of measuring $|1\rangle$ in the last qubit. This estimation is obtained with a Grover operator

$$\mathbb{Q} = \mathscr{A}\mathbb{S}_0\mathscr{A}^\dagger\mathbb{S}_{\psi_0},$$

Authorized licensed use limited to: CBS Library. Downloaded on March 31,2026 at 20:31:01 UTC from IEEE Xplore. Restrictions apply.

where $\mathbb{S}_0$ = 1 - 2 $|0\rangle\langle 0|$ and $\mathbb{S}_{\psi_0}$ = 1 - 2 $|\psi_0\rangle|0\rangle\langle\psi_0|\langle 0|$, and which is a rotation of angle $2\theta_a$ (where $a = \sin^2(\theta_a)$) in the 2-dimensional space spanned by $|\psi_0\rangle_n|0\rangle$ and $|\psi_1\rangle_n|1\rangle$. Recent work has established that QAE provides an estimation of a with an estimation error which scales with $\mathcal{O}\left(M^{-1}\right)$ for large values of M which is the number of quantum samples, equal to the number of applications of $\mathbb{Q}$. This is a quadratic speedup over the estimation error of a classical Monte Carlo method which scales with $\mathcal{O}\left(M^{-1/2}\right)$. The circuit to solve for the empirical example we study is prohibitively large to estimate with canonical QAE on current processors. While quantum processors are not yet capable of estimating the dynamic credit risk model with QAE, we achieve a nearly a quadradic speedup with the Maximum Likelihood Estimation (MLAE) algorithm proposed by [18] and available from *qiskit_algorithms*. The MLAE algorithm uses measurements of the state prepared by Q^k for each power $k \in \{0, \ldots, k_{max}\}$, and the classical maximum likelihood estimation (MLE) method to estimate a without the costly phase estimation routine. The theoretical bound of MLAE error asymptotically approaches the quadratic speedup of QAE. We chose MLAE with $k_max = 2$ for our tests because the circuit in Figure 8 can be reliably implemented on current hardware. We show our results with this method on both of the processors we study in table V. The confidence interval output by MLE is based on the assumption that the circuit results are perfectly accurate. Thus, the error resulting from hardware noise is the difference between the ideal value and the closest boundary of the confidence interval. Our estimate of $\alpha_{\mathcal{L}=1}$ using this algorithm run on the Honeywell H1 processor is within 2.5% of the exact value.

VII. Conclusion

The purpose of this paper is to propose a versatile class of risk models based on a Markovian regime switching environment which are better suited for implementation of quantum computing algorithms to realistic financial market conditions. Obviously, we still have to cope with the limitations of NISQ hardware, and that includes error mitigation and constraints on the number of qubits. Nevertheless, the models discussed in this paper provide a road map for future developments in the area of Fintech applications of quantum computing.

References

[1] F. Black and M. Scholes, "The pricing of options and corporate liabilities," Journal of political economy, vol. 81, no. 3, pp. 637–654, 1973.

[2] R. Orus, S. Mugel, and E. Lizaso, "Quantum computing for finance: Overview and prospects," Reviews in Physics, vol. 4, p. 100028, 2019.

[3] S. Woerner and D. J. Egger, "Quantum risk analysis," npj Quantum Information, vol. 5, no. 1, pp. 1–8, 2019.

[4] S. Chakrabarti, R. Krishnakumar, G. Mazzola, N. Stamatopoulos, S. Woerner, and W. J. Zeng, "A threshold for quantum advantage in derivative pricing," 2020, arXiv preprint arXiv:2012.03819.

[5] N. Stamatopoulos, D. J. Egger, Y. Sun, C. Zoufal, R. Iten, N. Shen, and S. Woerner, "Option pricing using quantum computers," Quantum, vol. 4, p. 291, 2020.

[6] E. Ghysels, A. C. Harvey, and E. Renault, "Stochastic volatility," in Handbook of Statistics - Volume 14. Elsevier, 1996, pp. 119–191.

[7] R. Garcia, E. Ghysels, and E. Renault, "The econometrics of option pricing," in Handbook of Financial Econometrics: Tools and Techniques. Elsevier, 2010, pp. 479–552.

[8] K. Kaneko, K. Miyamoto, N. Takeda, and K. Yoshino, "Quantum pricing with a smile: Implementation of local volatility model on quantum computer," EPJ Quantum Technology, vol. 9, no. 1, pp. 1–32, 2022.

[9] A. C. Vazquez and S. Woerner, "Efficient state preparation for quantum amplitude estimation," Physical Review Applied, vol. 15, no. 3, p. 034027, 2021.

[10] S. L. Heston, "A closed-form solution for options with stochastic volatility with applications to bond and currency options," Review of Financial Studies, vol. 6, no. 2, pp. 327–343, 1993.

[11] R. C. Merton, "On the pricing of corporate debt: The risk structure of interest rates," Journal of finance, vol. 29, no. 2, pp. 449–470, 1974.

[12] O. Vasicek, "The distribution of loan portfolio value," Risk, vol. 15, no. 12, pp. 160–162, 2002.

[13] M. S. Nielson, "Essays on correlation modelling," Ph.D. dissertation, Copenhagen Business School, 2011.

[14] D. J. Egger, R. G. Gutierrez, J. C. Mestre, and S. Woerner, "Credit risk analysis using quantum computers," IEEE Transactions on Computers, 2020.

[15] S. Herbert, "Quantum Monte-Carlo Integration: The Full Advantage in Minimal Circuit Depth," 2021, arXiv preprint arXiv:2105.09100.

[16] G. Brassard, P. Høyer, M. Mosca, and A. Tapp, "Quantum amplitude amplification and estimation," Quantum Computation and Quantum Information: A Millennium Volume, pp. 53–74, 2002.

[17] D. Grinko, J. Gacon, C. Zoufal, and S. Woerner, "Iterative quantum amplitude estimation," npj Quantum Information, vol. 7, no. 1, mar 2021. [Online]. Available: https://doi.org/10.1038%2Fs41534-021-00379-1

[18] Y. Suzuki, S. Uno, R. Raymond, T. Tanaka, T. Onodera, and N. Yamamoto, "Amplitude estimation without phase estimation," Quantum Information Processing, vol. 19, no. 2, pp. 1–17, 2020.

[19] J. R. Norris, Markov chains. Cambridge University Press, 1998.

[20] C. Blank, D. K. Park, and F. Petruccione, "Quantum-enhanced analysis of discrete stochastic processes," npj Quantum Information, vol. 7, no. 1, pp. 1–9, 2021.

[21] M. Mottonen, J. J. Vartiainen, V. Bergholm, and M. M. Salomaa, "Transformation of quantum states using uniformly controlled rotations," arXiv preprint quant-ph/0407010, 2004.

[22] IBM Quantum Computing, "Qiskit runtime sampler primitive." [Online]. Available: https://www.ibm.com/quantum-computing/

[23] P. Nikolov and V. Galabov, "Markov process simulation on a real quantum computer," in AIP Conference Proceedings, vol. 2172, no. 1. AIP Publishing LLC, 2019, pp. 090 007/1 – 090 007/5.

[24] B. Dupire, "Pricing with a smile," Risk, vol. 7, pp. 18–20, 1994.

[25] M. K. Ghosh, A. Arapostathis, and S. I. Marcus, "Ergodic control of switching diffusions," SIAM Journal on Control and Optimization, vol. 35, no. 6, pp. 1952–1988, 1997.

[26] R. S. Mamon and M. R. Rodrigo, "Explicit solutions to European options in a regime-switching economy," Operations Research Letters, vol. 33, no. 6, pp. 581–586, 2005.

[27] A. Deshpande and M. K. Ghosh, "Risk minimizing option pricing in a regime switching market," Stochastic Analysis and Applications, vol. 26, no. 2, pp. 313–324, 2008.

[28] S.-P. Zhu, A. Badran, and X. Lu, "A new exact solution for pricing european options in a two-state regime-switching economy," Computers and Mathematics with Applications, vol. 64, no. 8, pp. 2744–2755, 2012.

[29] S. Ramos-Calderer, A. Pérez-Salinas, D. García-Martín, C. Bravo-Prieto, J. Cortada, J. Planagumà, and J. I. Latorre, "Quantum unary approach to option pricing," Physical Review A, vol. 103, no. 3, mar 2021. [Online]. Available: https://doi.org/10.1103%2Fphysreva.103.032414

[30] G. Aleksandrowicz, T. Alexander, P. Barkoutsos, L. Bello, Y. Ben-Haim, D. Bucher, F. J. Cabrera-Hernández, J. Carballo-Franquis, A. Chen, C.-F. Chen, J. M. Chow, A. D. Córcoles-Gonzales,

Authorized licensed use limited to: CBS Library. Downloaded on March 31,2026 at 20:31:01 UTC from IEEE Xplore. Restrictions apply.

A. J. Cross, A. Cross, J. Cruz-Benito, C. Culver, S. D. L. P. González, E. D. L. Torre, D. Ding, E. Dumitrescu, I. Duran, P. Eendebak, M. Everitt, I. F. Sertage, A. Frisch, A. Fuhrer, J. Gambetta, B. G. Gago, J. Gomez-Mosquera, D. Greenberg, I. Hamamura, V. Havlicek, J. Hellmers, Łukasz Herok, H. Horii, S. Hu, T. Imamichi, T. Itoko, A. Javadi-Abhari, N. Kanazawa, A. Karazeev, K. Krsulich, P. Liu, Y. Luh, Y. Maeng, M. Marques, F. J. Martín-Fernández, D. T. McClure, D. McKay, S. Meesala, A. Mezzacapo, N. Moll, D. M. Rodríguez, G. Nannicini, P. Nation, P. Ollitrault, L. J. O'Riordan, H. Paik, J. Pérez, A. Phan, M. Pistoia, V. Prutyanov, M. Reuter, J. Rice, A. R. Davila, R. H. P. Rudy, M. Ryu, N. Sathaye, C. Schnabel, E. Schoute, K. Setia, Y. Shi, A. Silva, Y. Siraichi, S. Sivarajah, J. A. Smolin, M. Soeken, H. Takahashi, I. Tavernelli, C. Taylor, P. Taylour, K. Trabing, M. Treinish, W. Turner, D. Vogt-Lee, C. Vuillot, J. A. Wildstrom, J. Wilson, E. Winston, C. Wood, S. Wood, S. Wörner, I. Y. Akhalwaya, and C. Zoufal, "Qiskit: An Open-source Framework for Quantum Computing," Jan. 2019. [Online]. Available: https://doi.org/10.5281/zenodo.2562111

[31] T. G. Draper, "Addition on a quantum computer," 2000.

[32] H. Markowitz, Portfolio selection: Efficient diversification of investments. John Wiley New York, 1959.

[33] G. Li, Y. Ding, and Y. Xie, "Tackling the qubit mapping problem for nisq-era quantum devices," in Proceedings of the Twenty-Fourth International Conference on Architectural Support for Programming Languages and Operating Systems, ser. ASPLOS '19. New York, NY, USA: Association for Computing Machinery, 2019, p. 1001–1014. [Online]. Available: https://doi.org/10.1145/3297858.3304023

Authorized licensed use limited to: CBS Library. Downloaded on March 31,2026 at 20:31:01 UTC from IEEE Xplore. Restrictions apply.