Achieving High-Quality Portfolio Optimization with the Variational Quantum Eigensolver

Anbang Wang,[1] Zhonggang Lv,[1] Zhenyuan Ma,[1] Dunbo Cai,[1] and Zhihong Zhang[1,*]

[1] *Future Science and Technology Research Lab, China Mobile (Suzhou) Software Technology Company Limited, Suzhou 215163, China*

Portfolio optimization is a fundamental problem in finance that aims to determine the optimal allocation of assets within a portfolio to maximize returns while minimizing risk. It can be formulated as a Quadratic Unconstrained Binary Optimization (QUBO) problem, which is NP-hard. Quantum computing offers the potential to solve such problems more efficiently than classical methods. In this work, we employ the Variational Quantum Eigensolver (VQE) to address the portfolio optimization problem. To increase the likelihood of converging to high-quality solutions, we propose using the Weighted Conditional Value-at-Risk (WCVaR) as the cost function and the Covariance Matrix Adaptation Evolution Strategy (CMA-ES) as the optimizer. Our experiments are conducted using the classical simulations on the Wuyue QuantumAI platform. The results demonstrate that the combination of WCVaR and CMA-ES leads to improved performance in solving the portfolio optimization problem.

arXiv:2508.18625v1 [quant-ph] 26 Aug 2025

I. INTRODUCTION

Portfolio optimization is a fundamental problem in finance that seeks to allocate capital across various assets. It plays a crucial role in modern investment management by helping investors construct efficient portfolios and make informed decisions in complex financial markets. This problem can be formulated as a Quadratic Unconstrained Binary Optimization problem, which is NP-hard and thus computationally intractable on classical computers for large instances. Quantum computing offers the potential to solve such QUBO problems more efficiently, paving the way for significant advancements in portfolio optimization. Among the quantum algorithms, the Variational Quantum Eigensolver [1, 2] and the Quantum Approximate Optimization Algorithm (QAOA) [3, 4] are two promising candidates particularly well-suited for execution on Noisy Intermediate-Scale Quantum (NISQ) devices [5].

However, solving the QUBO problem differs significantly from finding the ground state of a typical chemical Hamiltonian. This is because the Ising Hamiltonian corresponding to a QUBO problem consists of terms that all commute with each other, resulting in a ground state (if non-degenerate) that is one of the computational basis states. Using the traditional expectation value of energy as the cost function is therefore not ideal. To address this challenge, Barkoutsos et al. [6] proposed using Conditional Value-at-Risk (CVaR)—a metric widely used in finance [7]—as the cost function. The CVaR cost function aligns well with the practical objectives of portfolio optimization and enhances the performance and robustness of VQE and QAOA. In this paper, we introduce a novel Weighted CVaR cost function that incorporates weights based on the energy of each sampled outcome. We also propose using the Covariance Matrix Adaptation Evolution Strategy [8] as the optimizer to mitigate the impact of potentially non-smooth or ill-conditioned objective functions on convergence. Our experiments, conducted using classical simulations of the VQE algorithm for portfolio optimization on the Wuyue QuantumAI platform, demonstrate that the combination of the WCVaR cost function and the CMA-ES optimizer leads to a significant improvement in performance.

The remainder of this paper is organized as follows: Section II provides a brief introduction to the background, including how to model the portfolio optimization problem using a dataset of historical closing prices, convert it into a QUBO problem, and solve it using the VQE algorithm. Section III describes the detailed implementation of our VQE approach. Section IV presents the results obtained from numerical calculation. Finally, Section V concludes the paper.

II. BACKGROUND

Portfolio optimization is a fundamental problem in finance that aims to determine the optimal allocation of assets within a portfolio to maximize returns while minimizing risk. Modern Portfolio Theory (MPT), introduced by Harry Markowitz in 1952 [9], is a widely accepted framework for portfolio optimization. It addresses the trade-off between risk and return through mean-variance analysis, emphasizing diversification to achieve efficient portfolios. In this section, we demonstrate how to formulate the portfolio optimization problem given market data and how to reduce it to the QUBO problem and the corresponding Ising model.

A. Portfolio Optimization

The market data is represented as a matrix P of size $M \times N$, where N is the number of assets, M is the

* zhangzhihong@cmss.chinamobile.com

number of time periods, and each entry of the matrix P_{ki} denotes the price of asset A_i at time point t_k. Let $T = (t_1, t_2, \ldots, t_M)^T$ be the vector of time points. We define the return of asset A_i at time moment t_k as

$$r_{ki} = \frac{P_{ki} - P_{k-1,i}}{P_{k-1,i}}. \tag{1}$$

Using these returns, we compute the expected return of asset A_i and the covariance between asset A_i and A_j as

$$\mu_i = \frac{1}{M}\sum_{k=1}^{M} r_{ki}, \tag{2}$$

$$\sigma_{ij} = \frac{1}{M-1}\sum_{k=1}^{M}(r_{ki} - \mu_i)(r_{kj} - \mu_j). \tag{3}$$

Suppose we have a total budget B that we wish to allocate among N assets in the portfolio. Let b_i be the portion of the budget allocated to asset A_i. These allocations must satisfy the following constraint:

$$\sum_i b_i \leq B. \tag{4}$$

Portfolio optimization involves two primary objectives: maximizing return and minimizing risk. The expected return, computed from historical market data, serves as a reasonable estimate for future performance. Therefore, the first objective function to maximize is the expected return, given by:

$$C_1(\boldsymbol{b}) = \sum_{i=1}^{N} \mu_i b_i, \tag{5}$$

where $\boldsymbol{b} = (b_1, b_2, \ldots, b_N)^T$ is the vector of investment allocations. The risk of the portfolio is typically measured by its volatility, which is the square root of the portfolio variance. Hence, the second objective function to minimize is the portfolio variance:

$$C_2(\boldsymbol{b}) = \sum_{ij} \sigma_{ij} b_i b_j. \tag{6}$$

The portfolio optimization problem is inherently a multi-objective optimization problem, involving two objective functions and one constraint. To solve such a problem, one seeks the Pareto front—also known as the efficient frontier in finance—which consists of solutions that cannot be improved in one objective without worsening the other. A common approach to finding the Pareto front is the scalarization method using linear weighting. In this method, the two objectives are combined into a single objective function by introducing a weighting factor λ:

$$C'(\boldsymbol{b}) = -\lambda C_1(\boldsymbol{b}) + (1-\lambda) C_2(\boldsymbol{b}). \tag{7}$$

Our aim is to minimize the combined objective function $C'(\boldsymbol{b})$ subject to the constraint (4).

B. Quadratic Unconstrained Binary Optimization

QUBO is a combinatorial optimization problem which can be formulated as follows:

$$Q(\boldsymbol{x}) = \sum_{i<j} q_{ij} x_i x_j + \sum_i q_i x_i + c, \tag{8}$$

where the variables x_i are binary, and parameters q_{ij}, q_i and c are real numbers.

In general, the total budget B and the individual investment amounts b_i are real numbers. Discretizing them into binary variables can significantly increase the number of variables in the QUBO formulation. To avoid this overhead, we assume that the total budget B is an integer and that each individual allocation b_i is represented by a binary variable indicating whether asset A_i is selected. Without loss of generality, we set $B = N/2$. In the following, we use $x_i \in \{0, 1\}$ to represent the binary decision variable corresponding to asset A_i, ensuring consistency with the notation used in the QUBO problem (8). Our goal then becomes minimizing the objective function

$$C'(\boldsymbol{x}) = -\lambda C_1(\boldsymbol{x}) + (1-\lambda) C_2(\boldsymbol{x}) \tag{9}$$

subject to the constraint

$$\sum_{i=1}^{N} x_i = N/2. \tag{10}$$

The constraint in Eq. (10) can be incorporated into the objective function using a penalty method. Specifically, we add a penalty term of the form $p(\sum_{i=1}^{N} x_i - N/2)^2$, where $p > 0$ is a sufficiently large penalty coefficient. The resulting final objective function to minimize is:

$$C(\boldsymbol{x}) = -\lambda C_1(\boldsymbol{x}) + (1-\lambda) C_2(\boldsymbol{x}) + p(\sum_{i=1}^{N} x_i - \frac{N}{2})^2 \tag{11}$$

$$= -\lambda \sum_{i=1}^{N} \mu_i x_i + (1-\lambda) \sum_{i=1}^{N} \sum_{j=i+1}^{N} \sigma_{ij} x_i x_j + p(\sum_{i=1}^{N} x_i - \frac{N}{2})^2. \tag{12}$$

C. Variational Quantum Eigensolver

The QUBO problem is mathematically equivalent to the Ising model. To transform the problem, we introduce a spin vector $\boldsymbol{s}$, where each element is defined as $s_i = 1 - 2x_i$, mapping the binary variables $x_i \in \{0, 1\}$ to spins $\{1, -1\}$. The objective function in Eq. (12) can then be rewritten in the (classical) Ising form:

$$E(\boldsymbol{s}) = -\sum_{i=1} h_i s_i - \sum_{i<j} J_{ij} s_i s_j, \tag{13}$$

where h_i and J_{ij} are real coefficients derived from the QUBO objective function (12). The corresponding quantum Ising Hamiltonian is obtained by replacing the classical spin variables s_i with Pauli operators $\hat{Z}_i$:

$$\hat{H} = -\sum_{i=1} h_i \hat{Z}_i - \sum_{i<j} J_{ij} \hat{Z}_i \hat{Z}_j. \tag{14}$$

Like QUBO, the (classical) Ising model is generally NP-hard and therefore cannot be solved efficiently in the worst case. However, if we can find the ground state of the corresponding quantum Ising Hamiltonian, we can determine the ground state of the classical Ising model—thereby solving the original QUBO problem. Finding the ground state of a general quantum system is known to be QMA-complete, which is considered the quantum analog of NP-completeness. In principle, even quantum computers are not expected to solve such problems efficiently in general. Nevertheless, several heuristic quantum algorithms have been proposed that may offer advantages for certain problem instances. These include VQE, QAOA, and quantum annealing [10]. In this work, we focus on the VQE algorithm.

VQE is is a hybrid quantum-classical algorithm. In this approach, a quantum computer is used to prepare a quantum state and measure the expectation value of a given Hamiltonian, while a classical computer performs an optimization to minimize this expectation value. Given a Hamiltonian $\hat{H}$, and a parameterized trial wave function (known as an ansatz) $\psi(\boldsymbol{\theta})$, the VQE algorithm seeks the optimal parameter vector $\boldsymbol{\theta}_m$ that minimizes the energy expectation value (the cost function), or Rayleigh quotient:

$$E(\boldsymbol{\theta}) = \frac{\langle \psi(\boldsymbol{\theta}) | \hat{H} | \psi(\boldsymbol{\theta}) \rangle}{\langle \psi(\boldsymbol{\theta}) | \psi(\boldsymbol{\theta}) \rangle}. \tag{15}$$

If we assume the state is normalized, the denominator vanishes.

The VQE algorithm was originally proposed and is widely used to solve problems in physics and chemistry. The Ising Hamiltonian represents a special case, as its eigenstates are the computational basis states. Let the eigensystem of the Ising Hamiltonian be defined by

$$\hat{H}|n\rangle = E_n |n\rangle, \tag{16}$$

where the eigenstates are ordered in ascending order of energy,, i.e., $|1\rangle$ denotes the ground state with energy E_1. For a given parameter $\boldsymbol{\theta}^*$, the variational wave function can be expanded in this eigenbasis as

$$|\psi(\boldsymbol{\theta}^*)\rangle = \sum_n c_n(\boldsymbol{\theta}^*) |n\rangle, \tag{17}$$

and the corresponding energy expectation value is

$$E(\boldsymbol{\theta}^*) = \sum_n |c_n(\boldsymbol{\theta}^*)|^2 E_n. \tag{18}$$

We already know that the ground state is $|1\rangle$, with ground state energy E_1. This state can, in principle, be reached in the expansion (17) by setting $c_1(\boldsymbol{\theta}^*) = 1$ and all other coefficients $c_i(\boldsymbol{\theta}^*) = 0$. However, it is generally difficult to design an ansatz capable of collapsing exactly to a specific computational basis state. Consequently, minimizing the energy expectation value (15) may not be an effective strategy for guiding the VQE algorithm toward the true ground state. Instead, the Conditional Value at Risk (CVaR) has been proposed as a more suitable cost function [6]. Suppose we prepare a parameterized trial wave function $\psi(\boldsymbol{\theta})$ and measure it in the computational basis, obtaining a set of bitstrings $\boldsymbol{x}_k$. We then compute the energy of each measured bitstring as $E_k = \langle \boldsymbol{x}_k | \hat{H} | \boldsymbol{x}_k \rangle$. This process is repeated K times, yielding a set of sampled energies. These energies are sorted in ascending order to form the ordered sample set $\boldsymbol{E} = (E_{(1)}, E_{(2)}, \ldots, E_{(K)})$, where $E_{(k)}$ denotes the k-th smallest value. For a given confidence level $\alpha \in (0, 1]$, CVaR is defined as the average of the smallest $\lceil \alpha K \rceil$ energies:

$$\mathrm{CVaR}_\alpha(\boldsymbol{E}) = \sum_{k=1}^{\lceil \alpha K \rceil} E_k. \tag{19}$$

When $\alpha = 1$, CVaR_1 reduces to the mean of the sampled energies

$$\bar{E} = \frac{1}{K} \sum_{k=1}^{K} E_k, \tag{20}$$

which approximates the standard energy expectation value (15). When α is sufficiently small such that $\lceil \alpha K \rceil = 1$, CVaR_α becomes the minimum observed energy. If the variational ansatz has non-zero overlap with the true ground state for all parameter values, this minimum can, in principle, converge to the ground state energy. However, for very small α, the cost function becomes non-smooth, making it difficult for classical optimizers to navigate the landscape effectively. Therefore, a moderate value of α is typically chosen to balance exploration of low-energy states with optimization stability.

III. DESIGN OF OUR VQE ALGORITHM

In this section, we detail the design of our VQE algorithm.

A. Weighted CvaR

In Reference [6], the authors demonstrate that using the CVaR cost function leads to faster convergence and better solutions for the combinatorial optimization problems they tested, including portfolio optimization. Standard CVaR assumes that all outcomes within the

worst α-fraction (e.g., the most extreme losses) contribute equally to the average, assigning them uniform weights. However, in practice, greater concern is often placed on the most extreme outcomes within this tail. To better reflect this preference, a weighted sum may be more appropriate. To enhance performance, we propose using a weighted CVaR as the cost function, where the weights are determined by the (relative or absolute) values of the energies within the tail. The WCVaR cost function is defined as:

$$\mathrm{WCVaR}_\alpha(\boldsymbol{E}) = \sum_{k=1}^{\lceil \alpha K \rceil} w_k E_k, \tag{21}$$

where w_k denotes the weight assigned to the k-th smallest energy $E_{(k)}$ in the ordered sample set, and the weights satisfy the normalization condition:

$$\sum_{k=1}^{\lceil \alpha K \rceil} w_k = 1. \tag{22}$$

The choice of weight plays a central role in WCVaR. We use the piecewise exponential weighting function with the details given in appendix A.

B. Covariance Matrix Adaptation Evolution Strategy

While the mean sampled energy (15) can be a poor cost function for VQE, both CVaR (19) and weighted CVaR (21) offer significant improvements by focusing optimization on low-energy states. However, these cost functions are typically non-smooth and noisy, which can hinder gradient-based optimizers and make it difficult to locate the minimum reliably. To address this challenge, we employ the Covariance Matrix Adaptation Evolution Strategy, a popular derivative-free optimization algorithm known for its effectiveness on nonlinear, non-convex, and noisy problems [8]. The core idea of CMA-ES is to iteratively improve a population of candidate solutions using an evolutionary strategy, gradually adapting the search distribution to converge toward the global optimum. Since CMA-ES does not require gradient information and is robust to noise, it is well-suited for optimizing the VQE cost function.

For benchmarking purposes, we also use the COBYLA optimizer, which has been reported as one of the most stable optimizers for VQE in Reference [2].

C. VQE ansatz

Reference [2] reports that the Pauli two-design ansatz performs best among the architectures evaluated. However, its use of random single-qubit rotation gates makes it difficult to reproduce and unsuitable for reliable benchmarking. Therefore, we adopt the two-local ansatz with RY and RZ gates as our first circuit structure. Specifically, we use the two-local ansatz with RY and RZ gates for the single-qubit rotation layers. Additionally, motivated by the work of [11], we design a second ansatz—the block ansatz—based on a general two-qubit building block. This block contains two CNOT gates and can implement arbitrary controlled-unitary operations [12]. In both ansatzes, entanglement is introduced through pairwise connections between adjacent qubits. The circuit diagrams for these two ansatzes are shown in Figure 1.

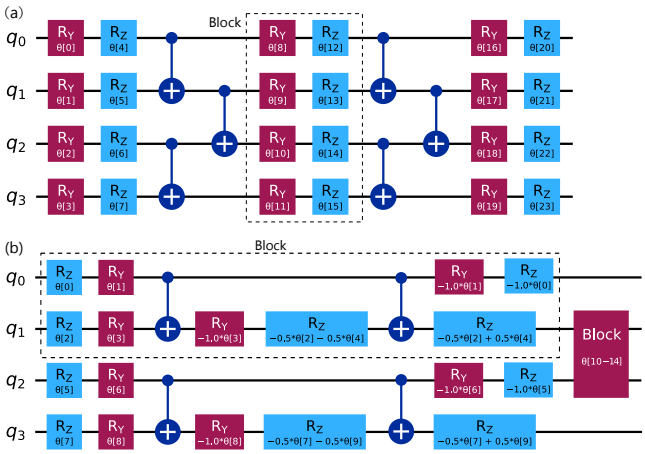

FIG. 1. The ansztzes for the VQE algorithm in this work. (a) A three-layer two-local ansatz. We use RY and RZ gates for the single-qubit rotation layers. Pairwise CNOT gates are used between layers. (b) A two-layer block ansatz. Each block contains two CNOT gates. This quantum circuit diagram was plotted using Qiskit [13].

D. Wuyue platform

We implemented our VQE algorithm using the Wuyue QuantumAI computing framework, a cloud-based platform [14] for quantum computing. This framework offers a diverse set of modularized ansatz choices, enabling rapid prototyping and testing of variational quantum circuits. Furthermore, its high-performance statevector simulator, capable of emulating circuits with up to 30 qubits, was employed to obtain benchmark results without quantum noise.

IV. NUMERICAL RESULTS

We constructed a 12-stock portfolio comprising 6 Chinese A-shares and 6 U.S. equities to enable a cross-market optimization analysis. The A-share constituents were selected to represent diverse sectors, including financial services, consumer staples, technology, and energy. In contrast, the U.S. holdings are primarily large-cap technology companies and other sector leaders. This compo-

sition provides diversified exposure across market capitalizations, industries, and geographic regions. Daily closing prices for the calendar year 2024 were obtained using the Yahoo Finance API via the Python library yfinance [15, 16]. These price data were processed into daily return series and used to compute the covariance matrix, both of which serve as inputs for the subsequent portfolio optimization. The dataset is available for download at: https://github.com/lvzggg/portfolio_vqe.git.

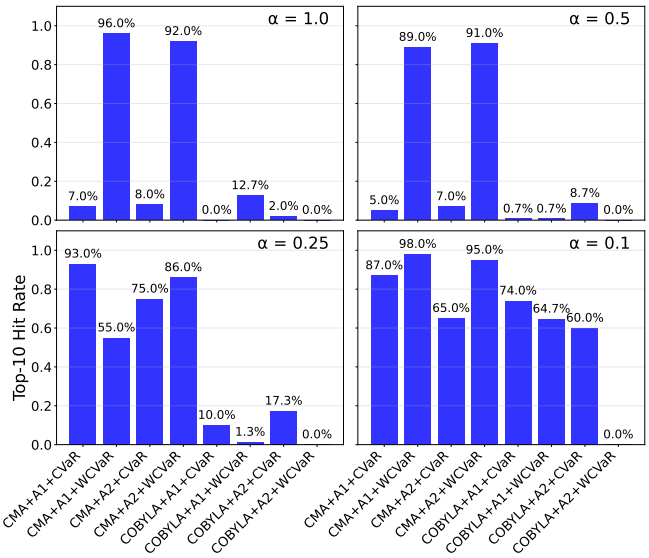

FIG. 2. Success rate during the optimization process for various combinations of ansatzes, optimizers, and cost functions. A1 and A2 denote the two-local ansatz and the block ansatz, respectively.

To evaluate the performance of the VQE algorithm, we assessed its success rate over the course of the optimization. Specifically, in each iteration, the quantum state output by VQE was projected onto the computational basis. The algorithm was deemed successful in that iteration if the exact ground state (i.e., the optimal solution) was found among the top 10 states ranked by their measurement probabilities. The overall performance was then quantified as the total number of successful iterations.

The results are presented in Fig. 2, where the first 100 iterations are shown for the CMA-ES optimizer and the first 150 iterations for the COBYLA optimizer. It is rare for the VQE algorithm to find the optimal solution in one iteration and then fail to find it in the subsequent iteration. Therefore, Fig. 2 can also be interpreted as a measure of convergence speed: a higher success rate indicates faster convergence. There is no significant difference in performance between the two-local ansatz and the block ansatz. However, both the choice of optimizer and the cost function have a substantial impact on performance. The main findings are summarized as follows:

- The performance of the CVaR cost function improves as α decreases, whereas the performance of the weighted CVaR (WCVaR) cost function shows no significant dependence on α. At $\alpha = 1$ or $\alpha = 0.5$, CVaR performs considerably worse than WCVaR. However, when $\alpha = 0.25$ or $\alpha = 0.1$, CVaR's performance, although slightly inferior, becomes comparable to that of WCVaR. The property that WCVaR's performance does not depend on α allows us to directly choose $\alpha = 1$, thereby avoiding the impact of hyperparameter selection on the efficiency of the VQE algorithm.

- On average, the CMA-ES optimizer outperforms the COBYLA optimizer. Further numerical analysis reveals that even with up to 300 iterations, COBYLA still fails to achieve the performance level attained by CMA-ES within just 100 iterations. Therefore, we conclude that CMA-ES is superior to COBYLA for this problem, and we restrict subsequent experiments to the CMA-ES optimizer.

- The COBYLA optimizer appears to be more compatible with the CVaR cost function, particularly at $\alpha = 0.25$, while the CMA-ES optimizer demonstrates greater compatibility with the WCVaR cost function. This may suggest that the choices of optimizer, cost function, and even ansatz should be considered holistically, as there is no single optimal choice for any one aspect in isolation.

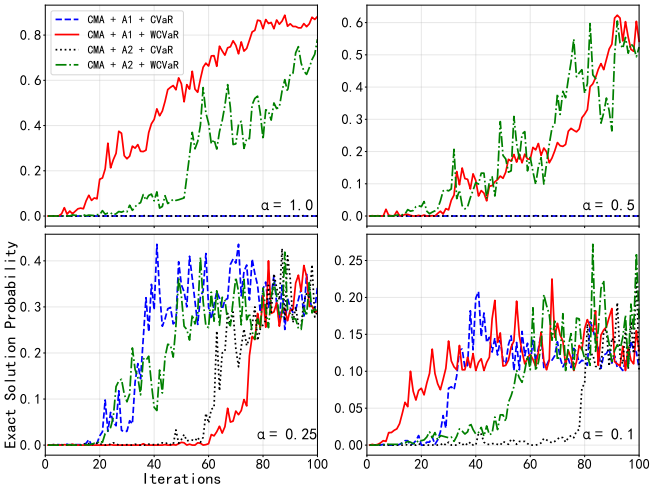

FIG. 3. The probability of sampling the optimal solution for various combinations of ansatzes, optimizers, and cost functions. A1 and A2 denote the two-local ansatz and the block ansatz.

In Fig. 3, we present the probability of sampling the optimal solution (i.e., the overlap between the VQE variational state and the ground state) as a function of the number of iterations. For consistency with previous results, only the first 100 iterations are shown for the CMA-ES optimizer. The observed trends are consistent with those in Fig. 2.

V. CONCLUSIONS

In this work, we address the portfolio optimization problem using the Variational Quantum Eigensolver (VQE) algorithm. We employ a dataset comprising 12 stocks and implement the VQE algorithm on a classical simulator on Wuyue QuautumAI platform. Our investigation focuses on the performance of VQE under various optimization configurations, particularly the interplay between ansatz design, cost functions, and classical optimizers. Empirical evaluation demonstrates that the choice of optimizer and cost function significantly impacts convergence behavior and solution quality. Simulation results indicate that, among the configurations considered, the combination of the CMA-ES optimizer and the Weighted Conditional Value-at-Risk (WCVaR) cost function yields the best performance. We believe these findings enhance our understanding of the role of optimization in VQE-based portfolio optimization and provide valuable guidance for future research.

ACKNOWLEDGMENTS

We acknowledge the support from Basic Research for Application Program of China Mobile (No. R251166S).

Appendix A: Weights in WCVaR cost function

In this section, we describe the weighting schemes employed in the WCVaR cost function. We assume the sampled energies are sorted in ascending order, forming an ordered set $E = (E_{(1)}, E_{(2)}, \ldots, E_{(K)})$, where $E_{(k)}$ denotes the k-th smallest energy value. For brevity, we present only the unnormalized weights.

The standard Conditional Value-at-Risk (CVaR) can be viewed as a special case of WCVaR, where equal weights are assigned to the $\lceil \alpha K \rceil$ smallest values in the sample set, and zero weight to all others:

$$w_k = \begin{cases} 1 & \text{if } k \leq \lceil \alpha K \rceil \\ 0 & \text{otherwise} \end{cases} \tag{A1}$$

The exponential weighting function is well-known to researchers in both physics and computer science, as it arises naturally in Boltzmann's law in statistical physics and the softmax function in machine learning and optimization. In this work, we employ three distinct variants of the exponential weighting function to explore their impact on the WCVaR cost function.

The first variant is the energy-based exponential weighting:

$$w_k = \exp\left[-\beta(E_{(k)} - E_0)\right], \tag{A2}$$

where $E_0 = E_{(1)}$ denotes the minimum energy value observed in the sample set, and β is an inverse temperature parameter that controls the concentration of weights on low-energy states.

The second variant is the rank-based exponential weighting:

$$w_k = \exp\left(-\beta k\right), \tag{A3}$$

where β is again an inverse temperature parameter. This form assigns weights based solely on the rank k of the energy value, independent of its absolute magnitude.

The third variant is a piecewise exponential weighting function, designed to allow different decay rates across segments of the ordered sample:

$$w_k = \begin{cases} \exp\left(-\beta_1 k\right) & \text{if } k < N_1, \\ \exp\left(-\beta_2 (k - N_1)\right) \cdot w_{N_1 - 1} & \text{if } N_1 \leq k < N_2, \\ \exp\left(-\beta_3 (k - N_2)\right) \cdot w_{N_2 - 1} & \text{if } k \geq N_2. \end{cases} \tag{A4}$$

Here, N_1 and N_2 (with $N_1 < N_2$) are positive integers defining the transition points between segments, and $\beta_1, \beta_2, \beta_3 > 0$ are positive decay parameters. The continuity of the weights at $k = N_1$ and $k = N_2$ is ensured by multiplying the exponential in each subsequent segment by the weight value at the end of the previous segment (e.g., $w_{N_1 - 1}$ and $w_{N_2 - 1}$).

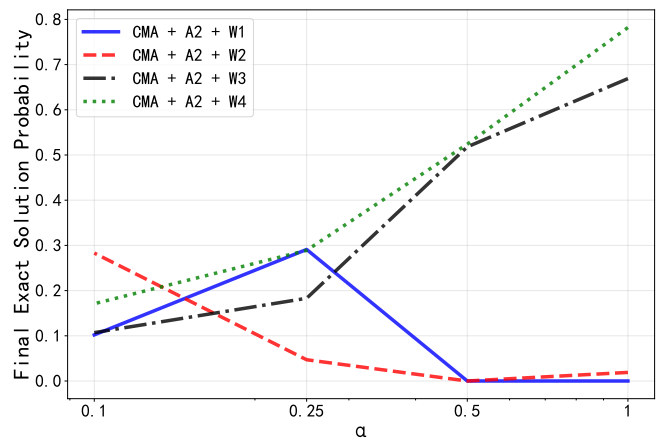

FIG. 4. Probability of sampling the optimal solution under different weighting schemes. The blue solid line (W1), red dashed line (W2), black dash-dotted line (W3), and green dotted line (W4) denote the CVaR, energy-based exponential weighting, rank-based exponential weighting, and piecewise exponential weighting cost functions, respectively.

In Fig. 4, we present the probability of sampling the optimal solution under four different weighting schemes. CVaR performs well when α is small but poorly when α is large. The energy-based exponential weighting scheme yields the worst performance; therefore, its piecewise variant is not considered further. In contrast, the rank-based exponential weighting performs well, particularly when α is large. The piecewise exponential weighting function outperforms the rank-based version, although

the improvement is not significant. Consequently, we adopt the piecewise exponential weighting function in the main part of this work. However, if minimizing the number of hyperparameters is a priority, the rank-based weighting function remains a viable and effective alternative.

[1] Peruzzo, A.; McClean, J.; Shadbolt, P.; Yung, M.H.; Zhou, X.Q.; Love, P.J.; Aspuru-Guzik, A.; O'brien, J.L. A variational eigenvalue solver on a photonic quantum processor. *Nature communications* **2014**, *5*, 4213. https://doi.org/10.1038/ncomms5213.

[2] Buonaiuto, G.; Gargiulo, F.; De Pietro, G.; Esposito, M.; Pota, M. Best practices for portfolio optimization by quantum computing, e xperimented on real quantum devices. *Scientific Reports* **2023**, *13*, 19434. Publisher: Nature Publishing Group, https://doi.org/10.1038/s41598-023-45392-w.

[3] Farhi, E.; Goldstone, J.; Gutmann, S. A Quantum Approximate Optimization Algorithm, 2014, [arXiv:quant-ph/1411.4028].

[4] Brandhofer, S.; Braun, D.; Dehn, V.; Hellstern, G.; Hüls, M.; Ji, Y.; Polian, I.; Bhatia, A.S.; Wellens, T. Benchmarking the performance of portfolio optimization with QAOA. *Quantum Information Processing* **2022**, *22*. https://doi.org/10.1007/s11128-022-03766-5.

[5] Preskill, J. Quantum Computing in the NISQ era and beyond. *Quantum* **2018**, *2*, 79. https://doi.org/10.22331/q-2018-08-06-79.

[6] Barkoutsos, P.K.; Nannicini, G.; Robert, A.; Tavernelli, I.; Woerner, S. Improving Variational Quantum Optimization using CVaR. *Quantum* **2020**, *4*, 256. https://doi.org/10.22331/q-2020-04-20-256.

[7] Acerbi, C.; Tasche, D. On the coherence of expected shortfall. *Journal of Banking & Finance* **2002**, *26*, 1487–1503. https://doi.org/https://doi.org/10.1016/S0378-4266(02)00283-2.

[8] Hansen, N. The CMA Evolution Strategy: A Tutorial, 2023, [arXiv:cs.LG/1604.00772].

[9] Markowitz, H. Portfolio Selection. *The Journal of Finance* **1952**, *7*, 77–91. Publisher: [American Finance Association, Wiley], https://doi.org/10.2307/2975974.

[10] Johnson, M.W.; Amin, M.H.S.; Gildert, S.; Lanting, T.; Hamze, F.; Dickson, N.; Harris, R.; Berkley, A.J.; Johansson, J.; Bunyk, P.; et al. Quantum annealing with manufactured spins. *Nature* **2011**, *473*, 194–198. Publisher: Nature Publishing Group, https://doi.org/10.1038/nature10012.

[11] Chivilikhin, D.; Samarin, A.; Ulyantsev, V.; Iorsh, I.; Oganov, A.R.; Kyriienko, O. MoG-VQE: Multiobjective genetic variational quantum eigensolver, 2020, [arXiv:quant-ph/2007.04424].

[12] Nielsen, M.A.; Chuang, I.L. *Quantum Computation and Quantum Information: 10th Anniversary Edition*; Cambridge University Press, 2010.

[13] Qiskit: An Open-source Framework for Quantum Computing. https://qiskit.org. Accessed: 2025-08-14.

[14] WuYue. https://ecloud.10086.cn/portal/product/WYQCLOUD. Accessed: 2025-08-14.

[15] Yahoo! Finance. https://finance.yahoo.com/. Accessed: 2025-08-14.

[16] yfinance 0.2.65. https://pypi.org/project/yfinance/. Accessed: 2025-08-14.