A quantum unstructured search algorithm for discrete optimisation: the use case of portfolio optimisation

Titos Matsakos and Adrian Lomas

Financial Risk Analytics, Market Intelligence, S&P Global, 25 Ropemaker St, London, EC2Y 9LY, UK

arXiv:2505.14645v1 [quant-ph] 20 May 2025

We propose a quantum unstructured search algorithm to find the extrema or roots of discrete functions, $f(\mathbf{x})$, such as the objective functions in combinatorial and other discrete optimisation problems. The first step of the Quantum Search for Extrema and Roots Algorithm (QSERA) is to translate conditions of the form $f(\mathbf{x}_*) \simeq f_*$, where f_* is the extremum or zero, to an unstructured search problem for $\mathbf{x}_*$. This is achieved by mapping $f(\mathbf{x})$ to a function $u(z)$ to create a quantum oracle, such that $u(z_*) = 1$ and $u(z \neq z_*) = 0$. The next step is to employ Grover's algorithm to find z_*, which offers a quadratic speed-up over classical algorithms. The number of operations needed to map $f(\mathbf{x})$ to $u(z)$ determines the accuracy of the result and the circuit depth. We describe the implementation of QSERA by assembling a quantum circuit for portfolio optimisation, which can be formulated as a combinatorial problem. QSERA can handle objective functions with higher order terms than the commonly-used Quadratic Unconstrained Binary Optimisation (QUBO) framework. Moreover, while QSERA requires some a priori knowledge of the extrema of $f(\mathbf{x})$, it can still find approximate solutions even if the conditions are not exactly satisfied.

1 Introduction

1.1 Quantum optimisation

Quantum computing has several applications in finance [for reviews, see 1–9]. Two of the most promising areas are Monte Carlo simulations (e.g. derivative pricing [10–16] and risk management [17–22]) and optimisation problems (e.g. portfolio optimisation [23–36] and transaction settlement optimisation [37]).

Optimisation problems are prevalent across scientific fields and they are also at the core of most machine learning models. When the objective function depends on continuous variables, gradient descent algorithms are among the commonly-used approaches. Two of the challenges using such algorithms are the presence of constraints and the convergence to a local extremum rather than the global one. These algorithms, however, are not applicable when the variables are binary and derivatives cannot be defined, as in the case of combinatorial optimisation; these are NP-hard problems even without constraints [see 5, 7, for reviews]. Many such problems can be formulated using the Quadratic Unconstrained Binary Optimisation (QUBO) framework or the equivalent Ising model, both of which model the individual contribution of each variable (first order terms) as well as their pair-wise interactions (second order terms). Constraints can be included as two possible types: either as "soft", which adds terms to the objective function but cannot guarantee they are exactly satisfied, or as "hard", which represent additional (in)equalities [31]. Depending on the form of the objective function and potential constraints, there are several families of quantum optimisation algorithms available, such as Quantum Adiabatic Algorithms (QAA) [e.g. 38], Variational Quantum Algorithms (VQAs) [e.g. 39, 40], Quantum Linear System Algorithms (QLSAs) [e.g. 41, 42], and Quantum Search Algorithms (QSA) [e.g. 43–45] (see [46] for a review of quantum optimisation).

In QAA, the objective function is represented by a Hamiltonian, $\mathcal{H}_c$, and its minimum by the corresponding ground state. The quantum computer is initialised in the known ground state of another Hamiltonian, $\mathcal{H}_0$, which is then evolved

Titos Matsakos: titos.matsakos@spglobal.com
Adrian Lomas: adrian.lomas@spglobal.com

towards $\mathcal{H}_c$ slowly enough such that the system remains at the ground state. Measuring the final state returns the minimum value of the objective function, see App. A.1.

In VQAs, on the other hand, the values of the objective function are represented by parametrised states. Such algorithms can be implemented in hybrid systems where: i) a parametrised state is initialised and measured in a quantum computer, ii) a classical computer processes the output and updates the state initialisation parameters such that the next iteration gets closer to the optimal value, and iii) these steps are repeated until convergence. VQAs are promising for near-term quantum applications because splitting out the parameter optimisation steps (classical computation) from the estimation of the objective function (quantum computation) keeps the quantum circuit depth shallow, thus mitigating the effects of noise. Among VQAs is the Variational Quantum Eigensolver (VQE) [39], which searches for the eigenstate that corresponds to the optimum of the objective function (see App. A.2), and the Quantum Approximate Optimisation Algorithm (QAOA) [40], whose quantum operators resemble QAA but which are parametrised such that the ground state can be found with a variational approach (see App. A.3 and [47] for a recent review).

QSAs are based on Grover's algorithm — hereafter Quantum Unstructured Search Algorithm (QUSA) — which finds the desired state by flagging it with a quantum oracle and amplifying its amplitude [48]. The corresponding optimisation algorithms, the family of Grover Adaptive Search (GAS) algorithms, are based on the following steps: i) set a threshold value, ii) use an oracle to identify all states less/greater than the threshold value, iii) amplify the amplitude of these states, iv) update the threshold value from one of them, and iv) repeat the steps until the optimum is found [43–45] (see also [49, 50] for some recent extensions). QSERA, which is described in the next section, belongs to the QSA family but is not a GAS algorithm.

1.2 Portfolio optimisation

Consider a pool of N_a assets, with the annual expected return and volatility of asset i denoted with μ_i and σ_i, respectively. Suppose that we have an amount v_p to invest to construct a portfolio of $N_p \leq N_a$ assets, with v_i the investment in asset i. The portfolio expected return, μ_p, and volatility, σ_p, are:

$$\mu_p = \sum_{i=0}^{N_a-1} \frac{v_i}{v_p} \mu_i \,, \tag{1}$$

$$\sigma_p^2 = \sum_{i_1=0}^{N_a-1} \sum_{i_2=0}^{N_a-1} \frac{v_{i_1}}{v_p} \frac{v_{i_2}}{v_p} \sigma_{i_1} \sigma_{i_2} \rho_{i_1 i_2} \,, \tag{2}$$

where $\sum_i v_i = v_p$. Limiting the pool of assets to publicly-listed equities and bonds, the number of available assets is on the order of $N_a \sim 10^5$.

Portfolio optimisation [51] aims to find the optimal allocation, i.e. the values of the continuous variables v_i that optimise an objective function under the constraint $\sum_i v_i = v_p$; or, more generally, $\sum_i v_i \leq v_p$. This is achieved either by setting a target μ_p and finding the allocation that minimises σ_p^2, or by setting a target σ_p^2 — representing the risk appetite of the investor — and maximising μ_p. Other approaches include the maximisation of an objective function of the form: $\lambda\mu_p - (1-\lambda)\sigma_p^2$, where $\lambda \in [0,1]$ captures the weight the investor puts on returns versus risk. The problem becomes more complex when additional investment considerations are taken into account, such as the liquidity of the assets, transactions costs, frequency of portfolio rebalancing, and when private equity/debt assets are also included.

The objective function can be simplified if we assume that the same amount is invested in each asset, $v = v_p/N_p$, which replaces the continuous variables v_i with the discrete (binary) variables $x_i \in \{0,1\}$ representing whether an asset is selected. In this case, the portfolio expected return and volatility are:

$$\mu_p = \frac{1}{N_p} \sum_{i=0}^{N_a-1} x_i \mu_i \,, \tag{3}$$

$$\sigma_p^2 = \frac{1}{N_p^2} \sum_{i_1=0}^{N_a-1} \sum_{i_2=0}^{N_a-1} x_{i_1} x_{i_2} \sigma_{i_1} \sigma_{i_2} \rho_{i_1 i_2} \,, \tag{4}$$

and the constraint is $\sum_i x_i = N_p$.

To highlight how challenging even this simpler problem is, notice that we can concatenate the values x_i to form a binary string, the length of

which is N_{a}. For a pool of assets that only include publicly-listed companies, this implies that there are 2^{10^5} possible investment combinations to chose from, which is on the order of $10^{30,000}$.

The paper is structured as follows. In Sect. 2 we describe QSERA and how to assemble the corresponding quantum gates for its implementation in quantum circuits. In Sect. 3 we discuss the advantages and limitations of the algorithm and in Sect. 4 we present an end-to-end example based on a simple portfolio optimisation problem. We summarise our conclusions in Sect. 5.

2 Quantum Search for Extrema and Roots Algorithm (QSERA)

2.1 Overview of QUSA

Suppose we want to search through an unordered list of N items — which we enumerate with the integers $z \in \{0, 1, ..., N-1\}$ — to find one specific item, z_*. To identify z_*, we have at our disposal a function, $u(z)$, which we can use to check any given z based on the property: $u(z_*) = 1$ and $u(z) = 0$ for all $z \neq z_*$. Classical computing algorithms rely on a brute-force approach: i) pick a value z from the list, ii) check it with $u(z)$, iii) if it is not z_* remove it from the list, iv) repeat until z_* is found. The probability of finding z_* in the first draw is $\frac{1}{N}$, in the second $\frac{N-1}{N}\frac{1}{N-1} = \frac{1}{N}$, in the third $\frac{N-1}{N}\frac{N-2}{N-1}\frac{1}{N-2} = \frac{1}{N}$, etc.; i.e. it is always $\frac{1}{N}$. If we draw $N/2$ items from the list, the probability of finding z_* is the sum of finding it in one of these draws, i.e. $(N/2)(1/N) = 1/2$; hence, the number of required iterations is on the order $\mathcal{O}(N)$.

In a quantum computer, $u(z)$ can be represented by a quantum oracle. QUSA can find z_* with a quadratic speed-up as compared to classical algorithms, i.e. the number of iterations is on the order of $\mathcal{O}(\sqrt{N})$ [48]. To show this, consider $N = 2^K$ and a quantum register of K qubits, $|0\rangle^{\otimes K}$.[1] Every element of the list can be represented by a quantum state, $|z\rangle = |\mathrm{b}_{K-1}...\mathrm{b}_1\mathrm{b}_0\rangle$, where $\mathrm{b}_{K-1}...\mathrm{b}_1\mathrm{b}_0$ is a binary number with b_k the k-th digit which is either 0 or 1. Start by initialising the register in a uniform superposition of all states:

$$|+\rangle^{\otimes K} = \mathcal{Q}_H\,|0\rangle^{\otimes K} = \frac{1}{\sqrt{N}}\sum_{z=0}^{N-1}|z\rangle\ , \tag{5}$$

where $\mathcal{Q}_H = \bigotimes_{k=0}^{K-1} H\,|0_k\rangle$ and H the Hadamard gate. Then, define a "reflection" unitary operator that flips the phase of the state $|z_*\rangle$:

$$\mathcal{Q}_*\,|z\rangle = (-1)^{u(z)}\,|z\rangle = \left(I - 2\,|z_*\rangle\,\langle z_*|\,\right)|z\rangle\ , \tag{6}$$

and another "reflection" unitary operator:

$$\begin{aligned}\mathcal{Q}_+ &= \left(2\,|+\rangle^{\otimes K}\,\langle+|^{\otimes K} - I\right)\\ &= \mathcal{Q}_H\left(2\,|0\rangle^{\otimes K}\,\langle 0|^{\otimes K} - I\right)\mathcal{Q}_H^\dagger\\ &= \mathcal{Q}_H\,\mathcal{Q}_0\,\mathcal{Q}_H^\dagger\,,\end{aligned} \tag{7}$$

where $\mathcal{Q}_H^\dagger = \mathcal{Q}_H$ (because $H^\dagger = H$). The effect of the operator $\mathcal{Q}_0$ is:

$$\mathcal{Q}_0\,|z=0\rangle = |z=0\rangle\ , \tag{8}$$

$$\mathcal{Q}_0\,|z\neq 0\rangle = -\,|z\neq 0\rangle\ , \tag{9}$$

i.e. it flips the phase of all states $|z\rangle \neq |0\rangle$. When this pair of operators is applied repeatedly m times on the initial superposition, $(\mathcal{Q}_+\mathcal{Q}_*)^m\,|+\rangle^{\otimes K}$, it amplifies the amplitude of the state $|z_*\rangle$ thus increasing the probability of measuring it with every iteration. The optimal number of iterations is $m_{\mathrm{opt}} \simeq (\pi\sqrt{N} - 2)/4$ (see App. B) and the corresponding quantum circuit is:

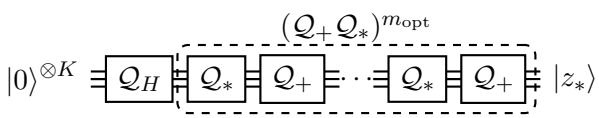

2.2 Description of QSERA

Consider a discrete function of the following form:

$$\begin{aligned}f(\mathbf{x}) &= w + \sum_{i_1}\sum_{i_2}\cdots\sum_{i_K} w'_{i_1 i_2 ... i_K}\,x_{i_1}x_{i_2}\cdots x_{i_K}\\ &= w + \sum_i w_i x_i + \sum_{i_1}\sum_{i_2>i_1} w_{i_1 i_2}x_{i_1}x_{i_2}\\ &\quad + \sum_{i_1}\sum_{i_2>i_1}\sum_{i_3>i_1,i_2} w_{i_1 i_2 i_3}x_{i_1}x_{i_2}x_{i_3} + \cdots\\ &\quad + \sum_{i_1}\sum_{i_2>i_1}\cdots\sum_{i_K>i_1,...,i_{K-1}} w_{i_1 i_2 ... i_K}x_{i_1}x_{i_2}\cdots x_{i_K}\,,\end{aligned} \tag{10}$$

where $\mathbf{x}$ is a K-dimensional vector, $x_i \in \{0, 1\}$ is its i-th element, w and $w'_{i_1 i_2 ... i_K}$ are constants,

[1] We use the notation $|0\rangle^{\otimes 2} = |0\rangle \otimes |0\rangle = |0\rangle\,|0\rangle = |00\rangle$.

and the terms $w'_{i_1 i_2 \ldots i_K} x_{i_1} x_{i_2} \cdots x_{i_K}$ can be reorganised into $2^K - 1$ terms with parameters $w_i, w_{i_1 i_2}, \ldots, w_{i_1 i_2 \ldots i_K}$ with distinct subscripts in ascending order.[2] Equation (10) has up to K-th order terms and thus describes more general objective functions than the QUBO framework, which only has first and second order terms. QUBO is as a special case of Eq. (10) when the values of w and all other parameters with more than two indices are zero. Note that the variable $\mathbf{x}$ can be expressed as a binary number, $\mathrm{b}_{K-1} \ldots \mathrm{b}_1 \mathrm{b}_0$ with b_k taking the value of x_k, and hence can be represented by an integer z, i.e. $\mathbf{x} \to \mathrm{b}_{K-1} \ldots \mathrm{b}_1 \mathrm{b}_0 \to z$.[3]

QSERA can find the extrema or roots of $f(\mathbf{x})$ by leveraging QUSA. The first step of QSERA is to map extrema conditions, $f(\mathbf{x}_*) = f_{\text{extr}}$, or root conditions, $f(\mathbf{x}_*) = 0$, to a function $u(z) \in \{0, 1\}$, such that $u(z_*) = 1$ and $u(z \neq z_*) = 0$, where z_* corresponds to $\mathbf{x}_*$. The second step is to find z_*, and thus $\mathbf{x}_*$, using QUSA.

The transformation $f(\mathbf{x}) \to u(z)$ requires the a priori knowledge of the values of the global minimum (f_{min}) and maximum (f_{max}) because we first need to rescale $f(\mathbf{x}) \to g(\mathbf{x})$, such that $g(\mathbf{x}) \in [0, 1]$. This rescaling is slightly different depending on the problem; for maximisation problems, we define:

$$g(\mathbf{x}) = \frac{f(\mathbf{x}) - f_{\text{min}}}{f_{\text{max}} - f_{\text{min}}}\,, \tag{11}$$

for minimisation problems:

$$g(\mathbf{x}) = \frac{f_{\text{max}} - f(\mathbf{x})}{f_{\text{max}} - f_{\text{min}}}\,, \tag{12}$$

and for root finding problems:

$$g(\mathbf{x}) = 1 - \frac{f(\mathbf{x})^2}{\max(f_{\text{min}}^2, f_{\text{max}}^2)}\,. \tag{13}$$

Notice that in all three cases $g(\mathbf{x}_*) = 1$ and $0 \leq g(\mathbf{x} \neq \mathbf{x}_*) < 1$. We can then transform $g(\mathbf{x}) \to u(z)$ by raising $g(\mathbf{x})$ to the power $n \in \mathbb{N}$:

$$u(z) \equiv \lim_{n \to \infty} g(\mathbf{x})^n\,, \tag{14}$$

which essentially gives $u(z_*) = 1$ when $f(\mathbf{x}_*) = f_{\text{max}}$, $f(\mathbf{x}_*) = f_{\text{min}}$, or $f(\mathbf{x}_*) = 0$, respectively for each case, and $u(z) = 0$ for all other z. Since in practical applications n needs to be finite, we can define:

$$u_n(z) \equiv g(\mathbf{x})^n\,, \tag{15}$$

where the higher the value of n the better $u_n(z)$ approximates $u(z)$.

The function $g(\mathbf{x})$ can be written as:

$$g(\mathbf{x}) = c_1 + \sum_i c_{1,i} x_i + \sum_{i_1} \sum_{i_2 > i_1} c_{1,i_1 i_2} x_{i_1} x_{i_2} + \cdots\,, \tag{16}$$

where c_1, $c_{1,i}$, $c_{1,i_1 i_2}$, ..., $c_{1,i_1 \ldots i_K}$ are constants given by Eqs. (10) and (11)-(13). Because $x_i^n = x_i$, note that $g(\mathbf{x})^n$ can be expressed as:

$$g(\mathbf{x})^n = c_n + \sum_i c_{n,i} x_i + \sum_{i_1} \sum_{i_2 > i_1} c_{n,i_1 i_2} x_{i_1} x_{i_2} + \cdots\,, \tag{17}$$

where c_n, $c_{n,i}$, $c_{n,i_1 i_2}$, ..., $c_{n,i_1 \ldots i_K}$ are constants that depend on c_1, $c_{1,i}$, $c_{1,i_1 i_2}$, ..., $c_{1n,i_1 \ldots i_K}$ of Eq. (16), and the subscript n refers to the power of $g(\mathbf{x})$.

Figure 1 visualises how the first step of QSERA works by showing an example discrete function $f(\mathbf{x})$ that depends on 4 binary variables (first row), the corresponding scaled function $g(\mathbf{x})$ (second row), and the functions $u_8(z)$ (third row) and $u_{64}(z)$ (fourth row) for the three cases: maximisation (left column), minimisation (middle column), and root finding problems (right column).

2.3 Implementation of the quantum oracle $u_n(z)$ with quantum gates

For the representation of the oracle $u_n(z)$ as a quantum gate, we start by defining the self-adjoint operator $\mathcal{B}_k$ which has the property:

$$\mathcal{B}_k \left|\mathrm{b}_k\right\rangle = x_k \left|\mathrm{b}_k\right\rangle\,, \tag{18}$$

i.e. $\mathcal{B}\left|0\right\rangle = 0\left|0\right\rangle$ and $\mathcal{B}\left|1\right\rangle = 1\left|1\right\rangle$. Since $Z\left|0\right\rangle = \left|0\right\rangle$ and $Z\left|1\right\rangle = -\left|1\right\rangle$, $\mathcal{B}_k$ can be defined as:

$$\mathcal{B}_k \equiv \frac{1}{2}(I - Z_k)\,, \tag{19}$$

and see App. C.1 for additional properties.

[2] The second equality of Eq. (10) follows from the property $x_i^n = x_i$ for any positive integer $n \leq K$; e.g., the first order terms are obtained when $i_1 = i_2 = \cdots = i_K$, i.e. $w_i x_i = w'_{ii \ldots i} x_i^K$.

[3] Since the variables x_i do not have an order, the map $\mathbf{x} \to \mathrm{b}_{K-1} \ldots \mathrm{b}_1 \mathrm{b}_0 \to z$ is not well defined unless we fix one. Given that any fixed order would be arbitrary, proximity of two integers, e.g. z_1 and $z_2 = z_1 + 1$, does not imply any relation between the values of $f(\mathbf{x}_1)$ and $f(\mathbf{x}_2)$.

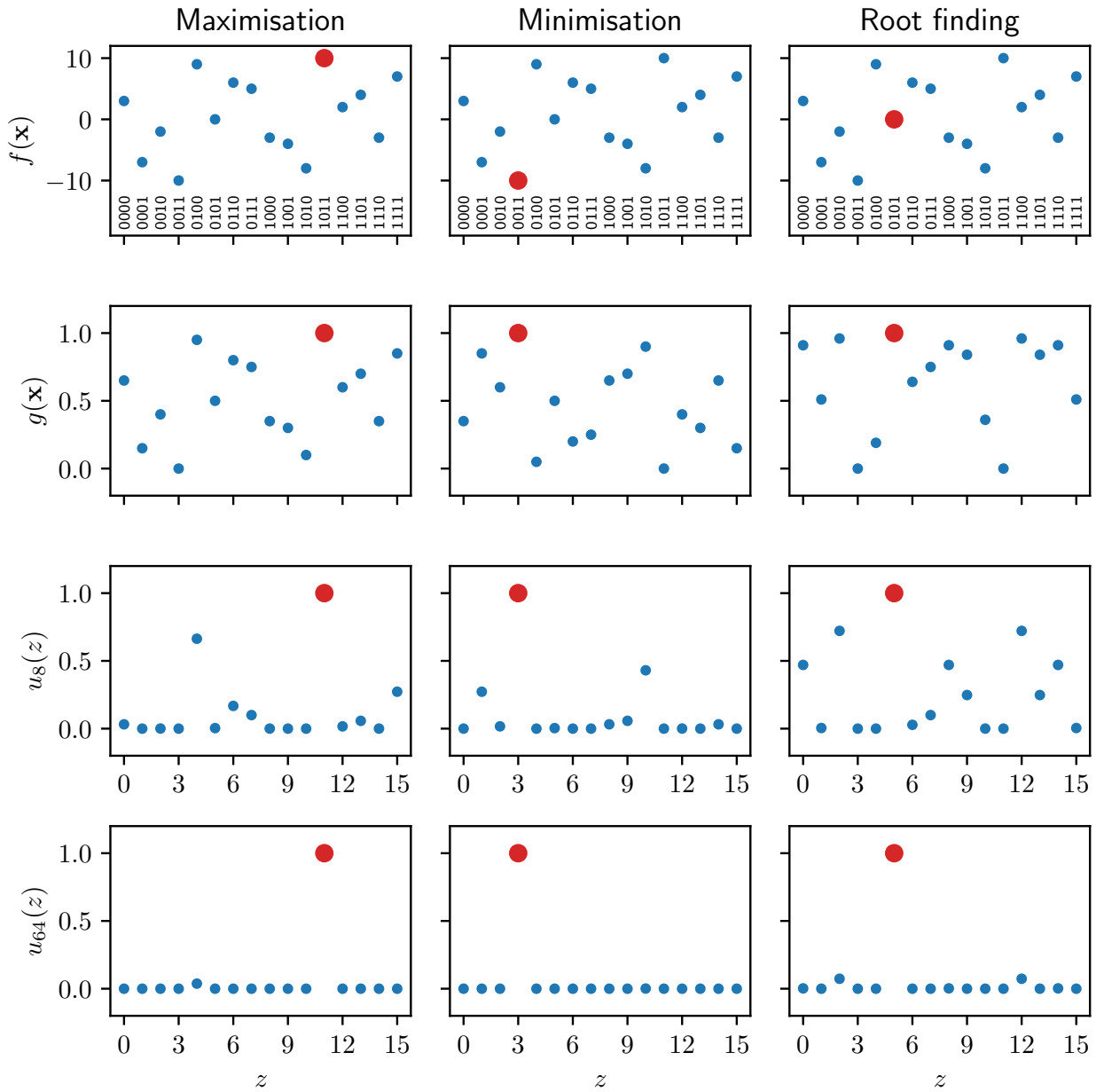

Figure 1: Visualisation of the first step of QSERA, i.e. the transformation $f(\mathbf{x}) \to u(z)$ for maximisation (left column), minimisation (middle column), and root finding (right column) problems. The example discrete function $f(\mathbf{x})$ is the same in all three cases and depends on four binary variables, $x_i \in \{0, 1\}$, that can be mapped to integers with $z \equiv \mathrm{b}_3\mathrm{b}_2\mathrm{b}_1\mathrm{b}_0$, where the right hand side has the elements of the vector $\mathbf{x}$ written as a binary number. The first row shows $f(\mathbf{x})$ with blue points, whereas the maximum (left), minimum (middle), and root (right) are shown with red points. The second row shows the transformation $f(\mathbf{x}) \to g(\mathbf{x})$ based on Eq. (11) (left), Eq. (12) (middle), and Eq. (13) (right), respectively. The third and fourth rows show the transformation $g(\mathbf{x}) \to u_n(z)$ of Eq. (15) for $n = 8$ and $n = 64$, respectively.

Then, we can define the operator $\mathcal{G}$ acting on a state $|z\rangle = |\mathrm{b}_{K-1}...\mathrm{b}_1\mathrm{b}_0\rangle$ such that:

$$\mathcal{G}\,|z\rangle = g(\mathbf{x})\,|z\rangle\ , \tag{20}$$

where $g(\mathbf{x})$ is an eigenvalue of $\mathcal{G}$ and $|z\rangle$ an eigenstate, with $\langle z_1|z_2\rangle = \delta_{z_1 z_2}$, i.e. the states form an orthonormal basis. By applying $\mathcal{G}$ multiple times, it follows that

$$\mathcal{G}^n\,|z\rangle = g(\mathbf{x})^n\,|z\rangle\ . \tag{21}$$

The operator $\mathcal{G}^n$ can be defined based on Eqs. (17) and (18):

$$\mathcal{G}^n = \sum_{j=0}^{K} \mathcal{C}_{n,j}\ , \tag{22}$$

where

$$\begin{aligned}
\mathcal{C}_{n,0} &= c_n I\ ,\\
\mathcal{C}_{n,1} &= \sum_k c_{n,k}\mathcal{B}_k\ ,\\
\mathcal{C}_{n,2} &= \sum_{k_1}\sum_{k_2>k_1} c_{n,k_1k_2}\mathcal{B}_{k_1}\mathcal{B}_{k_2}\ ,\\
&\vdots\\
\mathcal{C}_{n,K} &= \sum_{k_1}\sum_{k_2>k_1}\cdots\sum_{k_K>k_1,\ldots,k_{K-1}} c_{n,k_1k_2\ldots k_K}\mathcal{B}_{k_1}\mathcal{B}_{k_2}\cdots\mathcal{B}_{k_K}\ .
\end{aligned} \tag{23}$$

This enables us to define the unitary operator

$$\mathcal{Q}_* \equiv e^{i\pi\mathcal{G}^n} = e^{i\pi\sum_j \mathcal{C}_j} = \prod_{j=0}^{K} \mathcal{Q}_{*j}\ , \tag{24}$$

where $\mathcal{Q}_{*j} = e^{i\pi\mathcal{C}_j}$ and we dropped the subscript n from $\mathcal{Q}_* \equiv \mathcal{Q}_{*n}$, $\mathcal{Q}_{*j} \equiv \mathcal{Q}_{*n,j}$, $\mathcal{C}_j \equiv \mathcal{C}_{n,j}$, $c \equiv c_n$, $c_k \equiv c_{n,k}$, $c_{k_1k_2} \equiv c_{n,k_1k_2}$, ..., $c_{k_1\ldots k_K} \equiv c_{n,k_1\ldots k_K}$ to simplify notation. For $n \to \infty$, note that Eq. (24) is a reflection operator identical to that of Eq. (6), see App. C.2.

For the zeroth order term, $j = 0$, we have $\mathcal{C}_0\,|z\rangle = c\,|z\rangle$ and

$$\mathcal{Q}_{*0}\,|z\rangle = e^{i\phi_0}\,|z\rangle\ , \tag{25}$$

where $\phi_0 = c\pi$, see App. C.3. Since ϕ_0 does not depend on z, $\mathcal{Q}_{*0}$ can be implemented with the help of an ancilla qubit and the phase shift gate, $P(\phi_0)$, by rewriting the right-hand side of Eq. (25) as:

$$|z\rangle \otimes e^{i\phi_0}\,|1\rangle_{\mathrm{anc}} = |z\rangle \otimes P(\phi_0)\,|1\rangle_{\mathrm{anc}}\ . \tag{26}$$

The quantum gate of the operator $\mathcal{Q}_{*0}$ is thus:

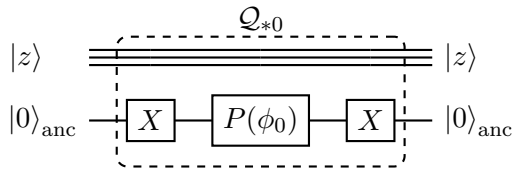

For the first order terms, the operator $\mathcal{C}_1$ gives:

$$\mathcal{Q}_{*1}\,|z\rangle = \prod_{k=0}^{K-1} \mathcal{P}_{1,k}(\phi_{1,k})\,|z\rangle\ , \tag{27}$$

where $\phi_{1,k} = c_k\pi$ and the quantum gate $\mathcal{P}_{1,k}(\phi_{1,k})$ is:

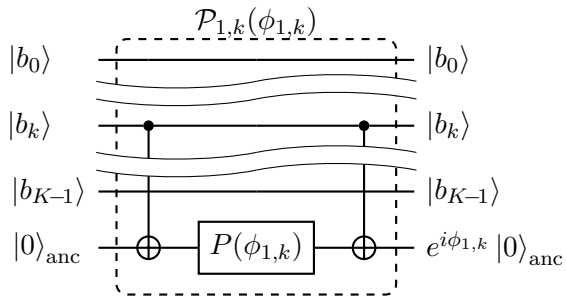

see App. C.4. For the second-order terms, the operator $\mathcal{Q}_{*2}$ is:

$$\mathcal{Q}_{*2}\,|z\rangle = \prod_{k_1=0}^{K-1}\prod_{k_2>k_1}^{K-1} \mathcal{P}_{2,k_1k_2}(\phi_{2,k_1k_2})\,|z\rangle\ , \tag{28}$$

where $\phi_{2,k_1k_2} = c_{k_1k_2}\pi$ and the quantum gate $\mathcal{P}_{2,k_1k_2}(\phi_{2,k_1k_2})$ is:

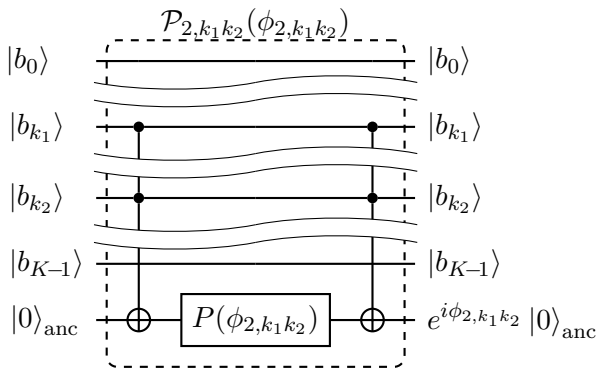

see App. C.5. In App. C.6 we show how to generalise this approach to derive operators for j-th order terms:

$$\mathcal{Q}_{*j} = \prod_{k_1}\cdots\prod_{k_j>k_1,\ldots k_{j-1}} \mathcal{P}_j(\phi_{j,k_1\ldots k_j})\,|\mathrm{b}_{K-1}...\mathrm{b}_0\rangle\ , \tag{29}$$

where $\mathcal{P}_j(\phi_{j,k_1\ldots k_j})$ is a gate that adds the phase $\phi_{j,k_1\ldots k_j} = c_{k_1\ldots k_j}\pi$ if $b_{k_1} = \cdots = b_{k_j} = 1$. Bringing all these operators together, the gate $\mathcal{Q}_* = \prod_j \mathcal{Q}_{*j}$ is:

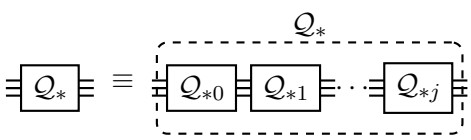

3 Remarks

If the values $f_{\min}$ and $f_{\max}$ are known and the power n is sufficiently large, QSERA is guaranteed to identify $\mathbf{x}_*$ after $\mathcal{O}(\sqrt{N})$ iterations in a single quantum execution (single shot). If these values are not known, however, appropriate estimates would be needed and the probability of finding $\mathbf{x}_*$ would be less than 1. For example, consider a minimisation problem where the theoretical minimum of the objective function is zero, but none of the $\mathbf{x}$ exactly gives that value, i.e. $f(\mathbf{x}_*) = f_{\min} > 0$ (a specific example of this is studied in Sect. 4). Setting estimated values for $f_{\min}$ and $f_{\max}$ in Eq. (12) that are less/greater than the true minimum/maximum of $f(\mathbf{x})$, respectively, may still allow QSERA to work. However, in this case $g(\mathbf{x}_*) < 1$ and thus $g(\mathbf{x}_*)^n = u_n(z_*) < 1$, leading to $u(z) = \lim_{n\to\infty} u_n(z) \to 0$ for all z. This implies that the oracle loses its ability to identify z_*, which is the opposite behaviour from the case in which the values $f_{\min}$, $f_{\max}$ are known and the probability of measuring $\mathbf{x}_*$ goes to 1 as n increases. Nevertheless, there should be an optimal value of $n = n_{\text{opt}}$ that is large enough to sufficiently identify the points near the optimum, but not too large to send $u_n(z_*)$ to 0 (see Sect. 4).

Another potential limitation of QSERA is that the parameters c_n, $c_{n,i}$, $c_{n,i_1 i_2}$, ... — needed to define the quantum gates $\mathcal{C}_j$ (Eq. 23) — may not be easy to calculate. To derive them, start from the known parameters w, w_i, $w_{i_1 i_2}$, ... of $f(\mathbf{x})$ and the corresponding parameters of $g(\mathbf{x})$ — c_1, $c_{1,i}$, $c_{1,i_1 i_2}$, ... — which, for optimisation problems, are just a rescaled version of the former. Then, the parameters c_n, $c_{n,i}$, $c_{n,i_1 i_2}$, ... of $g(\mathbf{x})^n$ can be recursively calculated with a classical computer based on $g(\mathbf{x})^n = g(\mathbf{x})^{n-1} g(\mathbf{x})$. However, while this should be in principle feasible, it may not be trivial to do for large N.

Apart from identifying roots and extrema of discrete functions, QSERA is general enough that can also work for continuous functions, e.g. $h(y)$ with $y \in \mathbb{R}$. For such functions, an initial step is required to discretise $h(y)$ with N points, i.e. to create pairs of y_i and $h(y_i)$ in order to map y_i to the integers z and $h(y_i)$ to $u(z)$. The larger the number of points the closer the result will be to the optimum y_*, but at the same time the deeper the quantum circuit and the larger the number of QUSA iterations needed. Since structured search (e.g. gradient descent) is generally expected to be more efficient for functions with continuous variables, QSERA could be useful in cases where these approaches may fail, such as when $h(y)$ is "noisy" and/or has steep gradients, properties which can trap gradient descent algorithms into local extrema.

4 Application of QSERA to portfolio optimisation

The practical implementation of QSERA can be described with the following portfolio optimisation problem. Consider $N_{\text{a}} = 4$ assets, labeled A, B, C, and D, with the following mean returns, volatility, and correlations:

$$\mu = \begin{bmatrix} 0.05 & 0.01 & 0.02 & 0.04 \end{bmatrix}, \tag{30}$$

$$\sigma = \begin{bmatrix} 0.40 & 0.10 & 0.20 & 0.30 \end{bmatrix}, \tag{31}$$

$$\rho = \begin{bmatrix} 1.0 & 0.5 & -0.4 & -0.2 \\ 0.5 & 1.0 & -0.1 & -0.3 \\ -0.4 & -0.1 & 1.0 & 0.3 \\ -0.2 & -0.3 & 0.3 & 1.0 \end{bmatrix}. \tag{32}$$

In the following, we label portfolios with the binary number: $\mathrm{b_D b_C b_B b_A}$.[4]

The objective function depends on the investor goals and can take many different forms. For this example, assume that we want to construct a portfolio that tracks a benchmark with $\mu_{\text{b}} = 0.043$ and $\sigma_{\text{b}} = 0.195$, with a budget that corresponds to $N_{\text{b}} = 2$ assets. We can represent this as a minimisation problem, $f(x_{\text{A}*}, x_{\text{B}*}, x_{\text{C}*}, x_{\text{D}*}) = f_{\min}$, with the objective function:

$$\begin{aligned} & f(x_{\text{A}}, x_{\text{B}}, x_{\text{C}}, x_{\text{D}}) = \\ & = \lambda_\mu \left(N_{\text{p}}\mu_{\text{p}} - N_{\text{p}}\mu_{\text{b}}\right)^2 + \lambda_{\sigma^2} \left(N_{\text{p}}^2\sigma_{\text{p}}^2 - N_{\text{p}}^2\sigma_{\text{b}}^2\right)^2 \\ & \quad + \left(1 - \lambda_\mu - \lambda_{\sigma^2}\right)\left(N_{\text{p}} - N_{\text{b}}\right)^2, \end{aligned} \tag{33}$$

where $N_{\text{p}} = x_{\text{A}} + x_{\text{B}} + x_{\text{C}} + x_{\text{D}}$, μ_{p} and σ_{p} are given by Eqs. (3) and (4), respectively, and the parameters $\lambda_\mu, \lambda_{\sigma^2} \in [0, 1]$ (with $\lambda_\mu + \lambda_{\sigma^2} \leq 1$) control whether the portfolio is constructed to more closely track the returns or volatility of the benhchmark; we set $\lambda_\mu = 0.95$ and $\lambda_{\sigma^2} = 0.049$.

[4] For example, the portfolio `0101` has $x_{\text{A}} = x_{\text{C}} = 1$, $x_{\text{B}} = x_{\text{D}} = 0$, $\mu_{\text{p}} = (\mu_{\text{A}} + \mu_{\text{C}})/2$ and $\sigma_{\text{p}}^2 = (\sigma_{\text{A}}^2 + \sigma_{\text{C}}^2 + 2\sigma_{\text{A}}\sigma_{\text{C}}\rho_{\text{AC}})/4$.

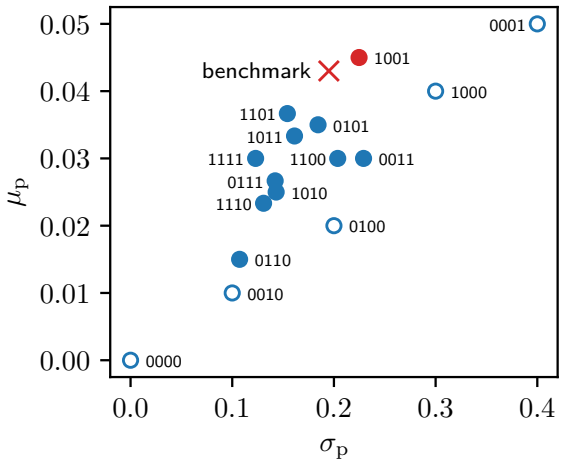

Figure 2: The returns and volatility of the $2^{N_a} = 16$ portfolios that can be constructed from the combinations of the $N_a = 4$ available assets. The 0000 portfolio and the portfolios consisting of one asset only are shown with open blue points, those with two or more assets with filled blue points, the benchmark with a red cross, and the portfolio that minimises $f(\mathbf{x})$ — which QSERA is expected to find — with a red point.

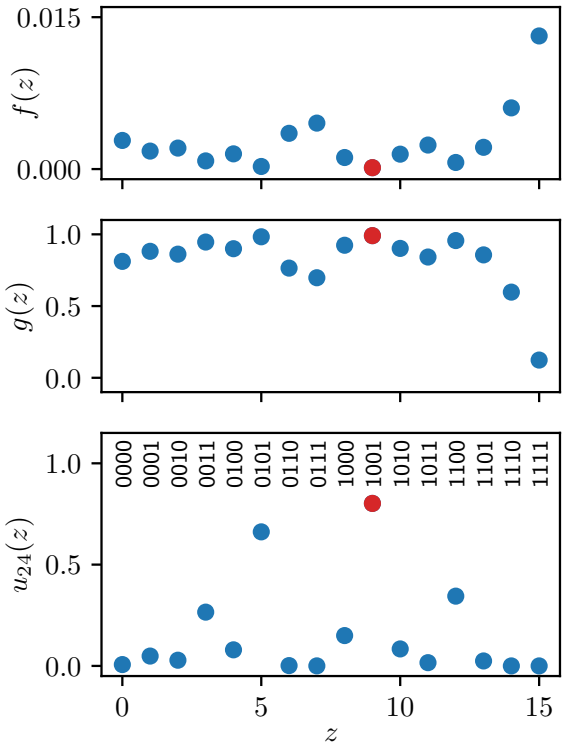

Figure 3: The functions $f(z)$ (Eq. 33, top), $g(z)$ (Eq. 12 with $f_{\min}$ set to 0, middle), and $u_{24}(z)$ (Eq. 15, bottom), which show how the quantum oracle is created.

Here, the budget has been introduced as a "soft" constraint (last term of Eq. 33) with the multiplier: $1 - \lambda_\mu - \lambda_{\sigma^2} = 0.001$.

Figure 2 shows μ_p and σ_p for the $2^{N_a} = 16$ portfolios (blue points) alongside the benchmark (red cross), and notice that no portfolio exactly matches the values μ_b and σ_b. QSERA is expected to find the portfolio 1001 (shown with a red point) which minimises $f(\mathbf{x})$ because it is the closest to the benchmark and has $N_p = N_b$. Note that the portfolio 0101 is also relatively close to the red cross, albeit farther, and consists of two assets as well; thus, its corresponding value of the objective function is expected to be near the minimum.

Figure 3 shows the first step of QSERA, $f(\mathbf{x}) \to u(z)$; namely, how the objective function (top panel) is transformed to an oracle (bottom panel) that can identify z_* (and hence $\mathbf{x}_*$). The value of $f(\mathbf{x}_*)$ is not known a priori because none of the available portfolios make Eq. (33) equal to zero, which is the theoretical minimum. However, the actual minimum is expected to be close to zero, thus we set $f_{\min} \simeq 0$ in the definition of $g(\mathbf{x})$ of Eq. (12). Similarly, we set $f_{\max} \simeq 0.15$ in the same definition, which is larger than the true maximum of $f(\mathbf{x})$ but which is not known either. These lead to $g(\mathbf{x}_*) < 1$, and therefore $g(\mathbf{x}_*)^n = u_n(z_*) < 1$; this is the case discussed in Sect. 3.

The objective function $f(\mathbf{x})$ (Eq. 33) can be written in the form of Eq. (10) and, in turn, $g(\mathbf{x})$ (Eq. 12) can be written in the form of Eq. (16), see App. D. Then, the parameters of Eq. (17), which are needed to define the operators $\mathcal{C}_j$ (Eq. 23), can be recursively calculated based on $g(\mathbf{x})^n = g(\mathbf{x})^{n-1} g(\mathbf{x})$. Following Eq. (17), this process gives the parameters c_n, $c_{n,i}$, $c_{n,i_1 i_2}$, ..., $c_{n,i_1 \ldots i_K}$ as a function of c_1, $c_{1,i}$, $c_{1,i_1 i_2}$, ..., $c_{1n,i_1 \ldots i_K}$ of Eq. (16). Table 1 lists these parameters for the zeroth to the fourth order terms, which are then used to assemble the quantum gates $\mathcal{Q}_{*j}$.

For the quantum circuit, we use four qubits to represent the $N = 2^4$ portfolios as quantum states, $|\mathrm{b_D b_C b_B b_A}\rangle$, two ancilla qubits to implement the AND operators, $|00\rangle_{\mathrm{AND}}$, and one ancilla qubit to track the phase of the states, $|0\rangle_{\mathrm{anc}}$. Appendix E shows the decomposition of the quantum gates $\mathcal{Q}_H$, $\mathcal{Q}_*$, and $\mathcal{Q}_+$, down to the basic quantum gates: H, X, Z, P, and Toffoli. Since the number of portfolio combinations

$f(\mathbf{x})$	$\times 10^{-3}$	$g(\mathbf{x})$	$\times 0.1$	$u_{24}(z)$	$\times 1$
w	2.8	c_1	8.1	c_{24}	0.0
w_{A}	-1.1	$c_{1,\mathrm{A}}$	0.7	$c_{24,\mathrm{A}}$	0.0
w_{B}	-0.8	$c_{1,\mathrm{B}}$	0.5	$c_{24,\mathrm{B}}$	0.0
w_{C}	-1.3	$c_{1,\mathrm{C}}$	0.9	$c_{24,\mathrm{C}}$	0.1
w_{D}	-1.7	$c_{1,\mathrm{D}}$	1.1	$c_{24,\mathrm{D}}$	0.1
w_{AB}	-0.2	$c_{1,\mathrm{AB}}$	0.1	$c_{24,\mathrm{AB}}$	0.2
w_{AC}	-0.2	$c_{1,\mathrm{AC}}$	0.1	$c_{24,\mathrm{AC}}$	0.5
w_{AD}	0.0	$c_{1,\mathrm{AD}}$	0.0	$c_{24,\mathrm{AD}}$	0.6
w_{BC}	2.8	$c_{1,\mathrm{BC}}$	-1.9	$c_{24,\mathrm{BC}}$	-0.1
w_{BD}	1.1	$c_{1,\mathrm{BD}}$	-0.7	$c_{24,\mathrm{BD}}$	-0.1
w_{CD}	0.8	$c_{1,\mathrm{CD}}$	-0.6	$c_{24,\mathrm{CD}}$	0.1
w_{ABC}	2.5	$c_{1,\mathrm{ABC}}$	-1.6	$c_{24,\mathrm{ABC}}$	-0.8
w_{ABD}	2.1	$c_{1,\mathrm{ABD}}$	-1.4	$c_{24,\mathrm{ABD}}$	-0.9
w_{ACD}	2.7	$c_{1,\mathrm{ACD}}$	-1.8	$c_{24,\mathrm{ACD}}$	-1.5
w_{BCD}	2.3	$c_{1,\mathrm{BCD}}$	-1.5	$c_{24,\mathrm{BCD}}$	-0.2
w_{ABCD}	3.9	$c_{1,\mathrm{ABCD}}$	-0.8	$c_{24,\mathrm{ABCD}}$	1.8

Table 1: The (rounded) parameters of the zeroth, first, second, third, and fourth order terms of $f(\mathbf{x})$, $g(\mathbf{x})$, and $u_{24}(z)$.

is $N = 16$, the optimal value of the QUSA iterations is $m_{\mathrm{opt}} = 2$.

Figure 4 shows the probability distribution of measuring the different states after applying the quantum gates $(\mathcal{Q}_+\mathcal{Q}_*)^2\mathcal{Q}_H$ to the initial state (the pair $\mathcal{Q}_+\mathcal{Q}_*$ is applied twice because $m_{\mathrm{opt}} = 2$). The portfolio `1001`, which is the solution of the optimisation problem, has the highest probability of being measured. As discussed in Sect. 3, its probability is less than 1 because we used approximations for f_{min} and f_{max} in the definition of $g(\mathbf{x})$. Notice that the portfolio `0101` is the second most likely to be measured because it is the second closest to the benchmark with $N_{\mathrm{p}} = N_{\mathrm{b}} = 2$. This suggests that when f_{min}, f_{max} are approximated, the result of QSERA of a single shot may not be the actual optimum but a point close to it. Multiple shots would be needed to identify the true optimum.

Figure 5 shows how the probability of measuring $|\texttt{1001}\rangle$ changes as the power n increases. For small values of n, $u_n(z)$ is still quite similar to $g(z)$ (see middle panel of Fig. 3) and the oracle cannot distinguish the portfolio that minimises $f(\mathbf{x})$ from other portfolios near the minimum. For n in the range ∼20-30, $u_n(z)$ is similar to

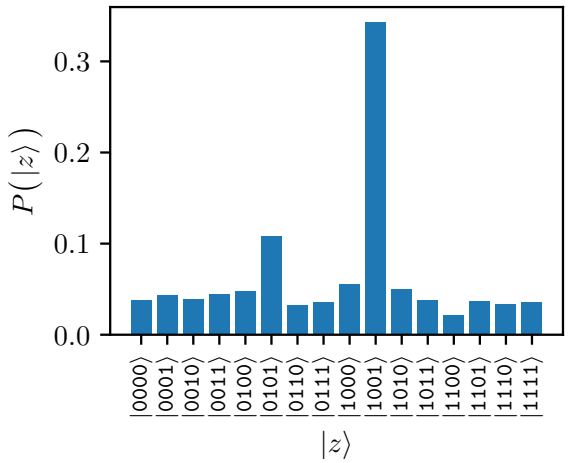

Figure 4: The probabilities of measuring the different states, each one representing a portfolio. QSERA identifies the portfolio `1001` which minimises the objective function of Eq. (33). The portfolio `0101`, which has the second lowest value, also has a high probability to be measured relative to all other ones.

$u_{24}(z)$ shown on the bottom panel of Fig. 3, and hence the quantum oracle $\mathcal{Q}_*$ can effectively amplify the probability of measuring z_*. For larger n, $u_n(z) \to 0$ for all z, and thus the probability of measuring the optimal portfolio also goes to zero. Essentially, Fig. 5 is a visualisation of the corresponding discussion in Sect. 3.

5 Summary and conclusions

We propose a quantum unstructured search algorithm, QSERA, that can find the roots or extrema $\mathbf{x}_*$ of discrete functions $f(\mathbf{x})$, and can thus be used to solve discrete optimisation problems such as combinatorial optimisation. QSERA consists of two steps: first, the objective function $f(\mathbf{x})$ is mapped to a function $u(z)$ serving as an oracle that can identify the root or extremum, and, second, Grover's algorithm is employed to find z_* in $\mathcal{O}(\sqrt{N})$ iterations. In the paper, we provide the mathematical description of the algorithm, demonstrate how to build the relevant quantum gates for its implementation, and assemble a quantum circuit for portfolio optimisation to show how QSERA works in practice.

QSERA can be applied to problems with objective functions of any order, and thus is more general than the algorithms requiring the QUBO formulation. QSERA can also be applied to con-

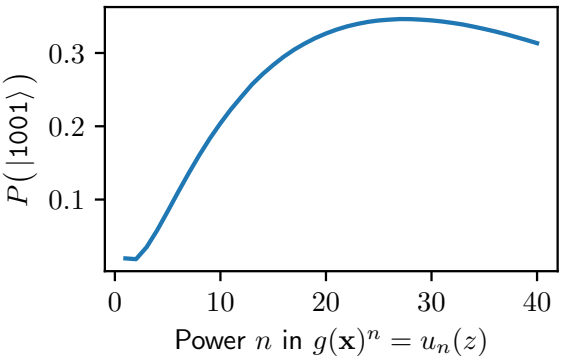

Figure 5: The probability of measuring the portfolio that minimises $f(\mathbf{x})$ as a function of the power n used to create the oracle $u_n(z)$.

tinuous functions, which may prove useful when structured search (e.g. gradient descent) is ineffective, such as when the function is "noisy" and/or has steep gradients. One of the limitations of the algorithm is that it can find the optimum $\mathbf{x}_*$ with certainty only if $f_{\min}$ and $f_{\max}$ are known a priori. Otherwise, appropriate estimates should be provided, and while the state representing $\mathbf{x}_*$ will be the most likely to be measured, multiple shots would be needed to distinguish it from other points near the optimum.

Acknowledgements

The quantum computations were performed on a classical computer using a zero-noise simulator from Qiskit (version `1.0`), an open-source framework for quantum computing [52].

References

[1] Román Orús, Samuel Mugel, and Enrique Lizaso. "Quantum computing for finance: Overview and prospects". Reviews in Physics **4**, 100028 (2019).

[2] Daniel J. Egger, Claudio Gambella, Jakub Marecek, Scott McFaddin, Martin Mevissen, Rudy Raymond, Andrea Simonetto, Stefan Woerner, and Elena Yndurain. "Quantum computing for finance: State-of-the-art and future prospects". IEEE Transactions on Quantum Engineering **1**, 1–24 (2020).

[3] Franco D. Albareti, Thomas Ankenbrand, Denis Bieri, Esther Hänggi, Damian Lötscher, Stefan Stettler, and Marcel Schöngens. "A Structured Survey of Quantum Computing for the Financial Industry" (2022). arXiv:2204.10026.

[4] Andrés Gómez, Alvaro Leitao Rodriguez, Alberto Manzano, Maria Nogueiras, Gustavo Ordóñez, and Carlos Vázquez. "A survey on quantum computational finance for derivatives pricing and var". Archives of Computational Methods in Engineering **29**, 4137–4163 (2022).

[5] Dylan Herman, Cody Googin, Xiaoyuan Liu, Alexey Galda, Ilya Safro, Yue Sun, Marco Pistoia, and Yuri Alexeev. "A Survey of Quantum Computing for Finance" (2022). arXiv:2201.02773.

[6] Alexander M. Dalzell, Sam McArdle, Mario Berta, Przemyslaw Bienias, Chi-Fang Chen, András Gilyén, Connor T. Hann, Michael J. Kastoryano, Emil T. Khabiboulline, Aleksander Kubica, Grant Salton, Samson Wang, and Fernando G. S. L. Brandão. "Quantum algorithms: A survey of applications and end-to-end complexities" (2023). arXiv:2310.03011.

[7] Dylan Herman, Cody Googin, Xiaoyuan Liu, Yue Sun, Alexey Galda, Ilya Safro, Marco Pistoia, and Yuri Alexeev. "Quantum computing for finance". Nature Reviews Physics **5**, 450–465 (2023). arXiv:2307.11230.

[8] Philip Intallura, Georgios Korpas, Sudeepto Chakraborty, Vyacheslav Kungurtsev, and Jakub Marecek. "A Survey of Quantum Alternatives to Randomized Algorithms: Monte Carlo Integration and Beyond" (2023). arXiv:2303.04945.

[9] Sascha Wilkens and Joe Moorhouse. "Quantum computing for financial risk measurement". Quantum Information Processing**22** (2023).

[10] Patrick Rebentrost, Brajesh Gupt, and Thomas R. Bromley. "Quantum computational finance: Monte carlo pricing of financial derivatives". Phys. Rev. A **98**, 022321 (2018).

[11] Nikitas Stamatopoulos, Daniel J. Egger, Yue Sun, Christa Zoufal, Raban Iten, Ning Shen, and Stefan Woerner. "Option Pricing using Quantum Computers". Quantum **4**, 291 (2020).

[12] Hao Tang, Anurag Pal, Lu-Feng Qiao, Tian-Yu Wang, Jun Gao, and Xian-Min

Jin. "Quantum Computation for Pricing the Collateralized Debt Obligations" (2020). arXiv:2008.04110.

[13] Almudena Carrera Vazquez and Stefan Woerner. "Efficient state preparation for quantum amplitude estimation". Phys. Rev. Appl. **15**, 034027 (2021).

[14] Shouvanik Chakrabarti, Rajiv Krishnakumar, Guglielmo Mazzola, Nikitas Stamatopoulos, Stefan Woerner, and William J. Zeng. "A Threshold for Quantum Advantage in Derivative Pricing". Quantum **5**, 463 (2021).

[15] João F. Doriguello, Alessandro Luongo, Jinge Bao, Patrick Rebentrost, and Miklos Santha. "Quantum algorithm for stochastic optimal stopping problems with applications in finance" (2021). arXiv:2111.15332.

[16] Jeong Yu Han and Patrick Rebentrost. "Quantum advantage for multi-option portfolio pricing and valuation adjustments" (2022). arXiv:2203.04924.

[17] Stefan Woerner and Daniel J. Egger. "Quantum risk analysis". npj Quantum Information **5**, 15 (2019).

[18] D. J. Egger, R. Garcia Gutierrez, J. Cahue Mestre, and S. Woerner. "Credit risk analysis using quantum computers". IEEE Transactions on ComputersPages 1–1 (5555).

[19] Kazuya Kaneko, Koichi Miyamoto, Naoyuki Takeda, and Kazuyoshi Yoshino. "Quantum speedup of Monte Carlo integration with respect to the number of dimensions and its application to finance". Quantum Information Processing **20**, 185 (2021).

[20] Javier Alcazar, Andrea Cadarso, Amara Katabarwa, Marta Mauri, Borja Peropadre, Guoming Wang, and Yudong Cao. "Quantum algorithm for credit valuation adjustments". New Journal of Physics **24**, 023036 (2022).

[21] Nikitas Stamatopoulos, Guglielmo Mazzola, Stefan Woerner, and William J. Zeng. "Towards Quantum Advantage in Financial Market Risk using Quantum Gradient Algorithms". Quantum **6**, 770 (2022).

[22] Titos Matsakos and Stuart Nield. "Quantum Monte Carlo simulations for financial risk analytics: scenario generation for equity, rate, and credit risk factors". Quantum **8**, 1306 (2024). arXiv:2303.09682.

[23] Patrick Rebentrost and Seth Lloyd. "Quantum computational finance: quantum algorithm for portfolio optimization" (2018). arXiv:1811.03975.

[24] Davide Venturelli and Alexei Kondratyev. "Reverse Quantum Annealing Approach to Portfolio Optimization Problems" (2018). arXiv:1810.08584.

[25] Iordanis Kerenidis, Anupam Prakash, and Dániel Szilágyi. "Quantum Algorithms for Portfolio Optimization" (2019). arXiv:1908.08040.

[26] Mark Hodson, Brendan Ruck, Hugh Ong, David Garvin, and Stefan Dulman. "Portfolio rebalancing experiments using the Quantum Alternating Operator Ansatz" (2019). arXiv:1911.05296.

[27] Frank Phillipson and Harshil Singh Bhatia. "Portfolio Optimisation Using the D-Wave Quantum Annealer" (2020). arXiv:2012.01121.

[28] Austin Gilliam, Stefan Woerner, and Constantin Gonciulea. "Grover Adaptive Search for Constrained Polynomial Binary Optimization". Quantum **5**, 428 (2021). arXiv:1912.04088.

[29] Samuel Palmer, Serkan Sahin, Rodrigo Hernandez, Samuel Mugel, and Roman Orus. "Quantum Portfolio Optimization with Investment Bands and Target Volatility" (2021). arXiv:2106.06735.

[30] N. Slate, E. Matwiejew, S. Marsh, and J. B. Wang. "Quantum walk-based portfolio optimisation". Quantum **5**, 513 (2021). arXiv:2011.08057.

[31] Jack S. Baker and Santosh Kumar Radha. "Wasserstein Solution Quality and the Quantum Approximate Optimization Algorithm: A Portfolio Optimization Case Study" (2022). arXiv:2202.06782.

[32] Samuel Mugel, Carlos Kuchkovsky, Escolástico Sánchez, Samuel Fernández-Lorenzo, Jorge Luis-Hita, Enrique Lizaso, and Román Orús. "Dynamic portfolio optimization with real datasets using quantum processors and quantum-inspired tensor networks". Physical Review Research **4**, 013006 (2022). arXiv:2007.00017.

[33] Sebastian Brandhofer, Daniel Braun, Vanessa Dehn, Gerhard Hellstern, Matthias Hüls, Yanjun Ji, Ilia Polian, Aman-

deep Singh Bhatia, and Thomas Wellens. "Benchmarking the performance of portfolio optimization with QAOA". Quantum Information Processing **22**, 25 (2023). arXiv:2207.10555.

[34] Dylan Herman, Ruslan Shaydulin, Yue Sun, Shouvanik Chakrabarti, Shaohan Hu, Pierre Minssen, Arthur Rattew, Romina Yalovetzky, and Marco Pistoia. "Constrained optimization via quantum Zeno dynamics". Communications Physics **6**, 219 (2023). arXiv:2209.15024.

[35] A. Ege Yilmaz, Stefan Stettler, Thomas Ankenbrand, and Urs Rhyner. "Grover Search for Portfolio Selection" (2023). arXiv:2308.13063.

[36] Debbie Lim and Patrick Rebentrost. "A quantum online portfolio optimization algorithm". Quantum Information Processing **23**, 63 (2024). arXiv:2208.14749.

[37] Lee Braine, Daniel J. Egger, Jennifer Glick, and Stefan Woerner. "Quantum algorithms for mixed binary optimization applied to transaction settlement". IEEE Transactions on Quantum Engineering **2**, 1–8 (2021).

[38] Edward Farhi, Jeffrey Goldstone, Sam Gutmann, and Michael Sipser. "Quantum Computation by Adiabatic Evolution" (2000). arXiv:quant-ph/0001106.

[39] Alberto Peruzzo, Jarrod McClean, Peter Shadbolt, Man-Hong Yung, Xiao-Qi Zhou, Peter J. Love, Alán Aspuru-Guzik, and Jeremy L. O'Brien. "A variational eigenvalue solver on a photonic quantum processor". Nature Communications **5**, 4213 (2014). arXiv:1304.3061.

[40] Edward Farhi, Jeffrey Goldstone, and Sam Gutmann. "A Quantum Approximate Optimization Algorithm" (2014). arXiv:1411.4028.

[41] Aram W. Harrow, Avinatan Hassidim, and Seth Lloyd. "Quantum Algorithm for Linear Systems of Equations". PhysRevLett **103**, 150502 (2009). arXiv:0811.3171.

[42] Danial Dervovic, Mark Herbster, Peter Mountney, Simone Severini, Naïri Usher, and Leonard Wossnig. "Quantum linear systems algorithms: a primer" (2018). arXiv:1802.08227.

[43] Christoph Durr and Peter Hoyer. "A Quantum Algorithm for Finding the Minimum" (1996). arXiv:quant-ph/9607014.

[44] D. Bulger, W. P. Baritompa, and G. R. Wood. "Implementing pure adaptive search with grover's quantum algorithm". Journal of Optimization Theory and Applications **116**, 517–529 (2003).

[45] W. P. Baritompa, D. W. Bulger, and G. R. Wood. "Grover's quantum algorithm applied to global optimization". SIAM J. on Optimization **15**, 1170–1184 (2005).

[46] Amira Abbas, Andris Ambainis, Brandon Augustino, Andreas Bärtschi, Harry Buhrman, Carleton Coffrin, Giorgio Cortiana, Vedran Dunjko, Daniel J. Egger, Bruce G. Elmegreen, Nicola Franco, Filippo Fratini, Bryce Fuller, Julien Gacon, Constantin Gonciulea, Sander Gribling, Swati Gupta, Stuart Hadfield, Raoul Heese, Gerhard Kircher, Thomas Kleinert, Thorsten Koch, Georgios Korpas, Steve Lenk, Jakub Marecek, Vanio Markov, Guglielmo Mazzola, Stefano Mensa, Naeimeh Mohseni, Giacomo Nannicini, Corey O'Meara, Elena Peña Tapia, Sebastian Pokutta, Manuel Proissl, Patrick Rebentrost, Emre Sahin, Benjamin C. B. Symons, Sabine Tornow, Víctor Valls, Stefan Woerner, Mira L. Wolf-Bauwens, Jon Yard, Sheir Yarkoni, Dirk Zechiel, Sergiy Zhuk, and Christa Zoufal. "Challenges and opportunities in quantum optimization". Nature Reviews Physics **6**, 718–735 (2024). arXiv:2312.02279.

[47] Kostas Blekos, Dean Brand, Andrea Ceschini, Chiao-Hui Chou, Rui-Hao Li, Komal Pandya, and Alessandro Summer. "A review on Quantum Approximate Optimization Algorithm and its variants". Physics Reports **1068**, 1–66 (2024). arXiv:2306.09198.

[48] Lov K. Grover. "A fast quantum mechanical algorithm for database search". In Gary L. Miller, editor, Proceedings of the Twenty-Eighth Annual ACM Symposium on the Theory of Computing, Philadelphia, Pennsylvania, USA, May 22-24, 1996. Pages 212–219. ACM (1996).

[49] Kohei Miyamoto, Masakazu Iwamura, and Koichi Kise. "A Quantum Algorithm for Finding k-Minima" (2019). arXiv:1907.03315.

[50] Anton S. Albino, Lucas Q. Galvão, Ethan

Hansen, Mauro Q. Nooblath Neto, and Clebson Cruz. "Quantum algorithm for finding minimum values in a Quantum Random Access Memory" (2023). arXiv:2301.05122.

[51] Harry Markowitz. "Portfolio selection". The Journal of Finance **7**, 77–91 (1952).

[52] "Qiskit: An open-source framework for quantum computing" (2021).

A Quantum optimisation algorithms

A.1 Quantum Adiabatic Algorithm (QAA)

The QAA family of algorithms are based on the Schrödinger equation: $i\frac{d}{dt}|\psi(t)\rangle = \mathcal{H}|\psi(t)\rangle$, where the operator $\mathcal{H}$ is the Hamiltonian. The eigenstates, $|\psi_n\rangle$, and eigenvalues, E_n, of $\mathcal{H}$ satisfy the equation: $\mathcal{H}|\psi_n\rangle = E_n|\psi_n\rangle$, with E_n^{-1} characteristic timescales. We can define a time-evolution operator, $\mathcal{U}(t_0+t,t_0)$, that takes a state from time t_0 to a time t_0+t: $|\psi(t_0+t)\rangle = \mathcal{U}(t_0+t,t_0)|\psi(t_0)\rangle$, where $\mathcal{U}(t_2,t_0) = \mathcal{U}(t_2,t_1)\mathcal{U}(t_1,t_0)$ for $t_2 \geq t_1 \geq t_0$. We can then rewrite the Schrödinger equation as: $i\frac{d}{dt}\mathcal{U}(t_0+t,t_0) = \mathcal{H}\mathcal{U}(t_0+t,t_0)$, which has the solution: $\mathcal{U}(t_0+t,t_0) = e^{-i\mathcal{H}t}$. If the Hamiltonian is time-dependent, but it varies much more slowly than the timescales E_n^{-1}, then for t on the order of E_n^{-1} we can consider $\mathcal{H}(t_0+t)$ to be constant and the solution of the Schrödinger equation can be approximated as: $\mathcal{U}(t_0+t,t_0) \simeq e^{-i\mathcal{H}(t_0+t)t}$.

We can leverage this property to find the unknown ground state of a Hamiltonian $\mathcal{H}_\mathrm{c}$ as follows: i) prepare the system in the ground state of a known Hamiltonian, $\mathcal{H}_0$, ii) slowly evolve the Hamiltonian towards $\mathcal{H}_\mathrm{c}$, and iii) measure the final state of the system which will be the ground state of $\mathcal{H}_\mathrm{c}$. In particular, consider the Hamiltonian: $\mathcal{H}(t) = \frac{T-t}{T}\mathcal{H}_0 + \frac{t}{T}\mathcal{H}_\mathrm{c}$, where $\mathcal{H}_0 = \mathcal{H}(0)$ and $\mathcal{H}_\mathrm{c} = \mathcal{H}(T)$ are time-independent, and the eigenstates of $\mathcal{H}_0$ are known but those of $\mathcal{H}_\mathrm{c}$ are not. The operator $\mathcal{H}_\mathrm{c}$ corresponds to the function we want to minimise and its ground state to the global minimum. For the practical implementation, we discretise the time interval $[0,T]$ with M timesteps, Δt, such that:

$$\mathcal{U}(T,0) = \prod_{m=0}^{M-1} U(m\Delta t + \Delta t, m\Delta t) \simeq \prod_m e^{-i\mathcal{H}(m\Delta t+\Delta t)\Delta t}\,, \tag{34}$$

where $\mathcal{H}(m\Delta t) = \frac{M-m}{M}\mathcal{H}_0 + \frac{m}{M}\mathcal{H}_\mathrm{c}$. However, because $\mathcal{H}_0$ and $\mathcal{H}_\mathrm{c}$ do not commute, we need to use the Trotter product formula for the right-hand side of Eq. (34).

A.2 Variational Quantum Eigensolvers (VQE)

Consider a function $f(z) \in [0,1]$ and a quantum register of $K = K_\mathrm{in} + K_\mathrm{out}$ qubits, where K_in qubits are used to represent z and K_out qubits to compute $f(z)$. We can define a self-adjoint operator $\mathcal{F}$ acting on a state $|z\rangle$ such that $\mathcal{F}|z\rangle = f(z)|z\rangle$, where $f(z)$ is an eigenvalue of $\mathcal{F}$ and $|z\rangle$ an eigenstate, with the states $\langle z_1|z_2\rangle = \delta_{z_1 z_2}$ forming an orthonormal basis ($\delta_{z_1 z_2}$ is the Kronecker delta). The eigenvalue $f(z)$ can be measured with a Quantum Phase Estimation (QPE) algorithm. First, define the operator $\mathcal{Q} \equiv e^{i\pi\mathcal{F}}$ which when applied m times to an eigenstate gives $\mathcal{Q}^m|z\rangle = e^{im\phi}|z\rangle$, where $\phi = \pi f(z)$. Then, prepare the input qubits in the state $\mathcal{Z}|0\rangle^{\otimes K_\mathrm{in}} = |z\rangle$ with an appropriate operator $\mathcal{Z}$, and the output qubits in the state $\mathrm{QFT}|0\rangle^{\otimes K_\mathrm{out}} = |+\rangle^{\otimes K_\mathrm{out}}$ using a Quantum Fourier Transform (QFT) gate. By applying $\mathcal{Q}^m$ as a control gate — with the control qubits being the input ones and the target qubits the output ones — we can exploit phase kickback to encode multiples of the angle ϕ on the phases of the output qubits. Finally, based on quantum interference, we can apply an inverse QFT ($\mathrm{QFT}^\dagger$) gate to directly read off the value of $f(z)$ from the output qubits. The corresponding quantum circuit is:

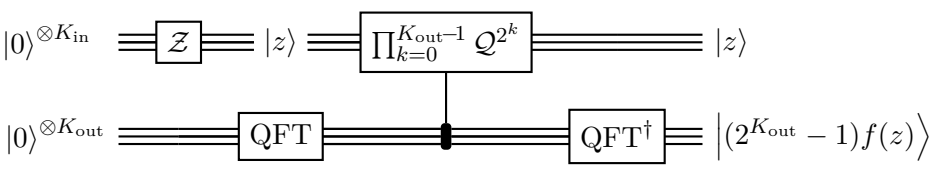

where

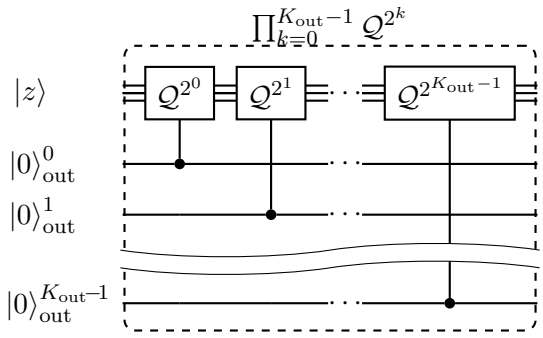

and

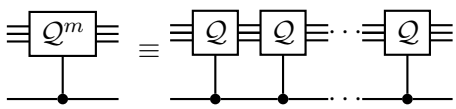

e.g. see Ref. [22] for a detailed implementation of QPE. Given a superposition $|\psi\rangle = \sum_{z=0}^{2^{K_{\rm in}}-1} a_z |z\rangle$, where $p_z \equiv |a_z|^2 = \langle z|\psi\rangle$ is the probability of measuring the state $|z\rangle$, we can use QPE to measure the expected value $\langle f\rangle = \langle\psi| \mathcal{F} |\psi\rangle = \sum_z p_z f(z)$ based on the fact that $\mathcal{F}|\psi\rangle = \sum_z a_z f(z) |z\rangle$.

With a quantum circuit available to compute $\langle f\rangle$, the extrema can be found with a variational approach. In particular, VQE algorithms employ an iterative optimisation process as follows: i) initialise the input state $\mathcal{A}(\mathbf{h})|0\rangle^{\otimes K_{\rm in}} = |\psi(\mathbf{h})\rangle$ with a parametrised quantum gate $\mathcal{A}(\mathbf{h})$ where $\mathbf{h} = (h_1, h_2, ..., h_M)$ is a set of M parameters, ii) estimate $\langle f\rangle$ with a QPE circuit, iii) feed the result to a classical computer to obtain updated parameters $\mathbf{h}$ such that the next input state gets closer to the optimum of f, and iv) repeat until convergence.

A.3 Quantum Approximate Optimisation Algorithm (QAOA)

QAOA is inspired by QAA, with the main difference being the parametrisation of $\mathcal{U}$ with parameters $\mathbf{h}_0$ and $\mathbf{h}_{\rm c}$, i.e. $\mathcal{U}(T,0) \to \mathcal{U}(\mathbf{h}_0, \mathbf{h}_{\rm c})$, such that a variational approach can be used to achieve convergence. Specifically, the system is initialised in the ground state, $|\psi_0\rangle$, of a known Hamiltonian, $\mathcal{H}_0$, and evolves towards the ground state of the target Hamiltonian, $\mathcal{H}_{\rm c}$, based on the evolution operator:

$$|\psi(\mathbf{h}_0, \mathbf{h}_{\rm c})\rangle = \mathcal{U}(\mathbf{h}_0, \mathbf{h}_{\rm c})|\psi_0\rangle = \prod_{m=1}^{M} \left(e^{-ih_{0m}\mathcal{H}_0} e^{-ih_{{\rm c}m}\mathcal{H}_{\rm c}}\right)|\psi_0\rangle \ , \tag{35}$$

where $\mathbf{h}_0 = (h_{01}, h_{02}, ..., h_{0M})$ and $\mathbf{h}_{\rm c} = (h_{\rm c1}, h_{\rm c2}, ..., h_{{\rm c}M})$ are $2M$ parameters that can be varied to obtain the ground state of $\mathcal{H}_{\rm c}$.

B QUSA worked example

The initial uniform superposition of Eq. (5), $|\psi_0\rangle = |+\rangle^{\otimes K}$, can be rewritten in terms of two orthogonal states:

$$|\psi_0\rangle = \frac{1}{\sqrt{N}}\left(\sum_{z\neq z_*} |z\rangle + |z_*\rangle\right) = \frac{\sqrt{N-1}}{\sqrt{N}}|\zeta\rangle + \frac{1}{\sqrt{N}}|z_*\rangle \ , \tag{36}$$

where $|\zeta\rangle \equiv (1/\sqrt{N-1})\sum_{z\neq z_*}|z\rangle$ and the orthonormality of the basis states, $\langle z_1|z_2\rangle = \delta_{z_1 z_2}$, implies that $\langle\zeta|\zeta\rangle = 1$, $\langle z_*|z_*\rangle = 1$, and $\langle\zeta|z_*\rangle = 0$; see top left panel of Fig. 6. In the first iteration, the application of the operator $\mathcal{Q}_+\mathcal{Q}_*$ gives:

$$\mathcal{Q}_*|\psi_0\rangle = \Big(I - 2|z_*\rangle\langle z_*|\Big)|\psi_0\rangle = |\psi_0\rangle - \frac{2}{\sqrt{N}}|z_*\rangle \ , \tag{37}$$

$$|\psi_1\rangle = \mathcal{Q}_+\mathcal{Q}_*|\psi_0\rangle = \Big(2|\psi_0\rangle\langle\psi_0| - I\Big)\mathcal{Q}_*|\psi_0\rangle = \left(1 - \frac{4}{N}\right)\frac{\sqrt{N-1}}{\sqrt{N}}|\zeta\rangle + \left(3 - \frac{4}{N}\right)\frac{1}{\sqrt{N}}|z_*\rangle \ , \tag{38}$$

which amplifies the probability of measuring the state $|z_*\rangle$ by a factor of $(3-4/N)^2$; see top middle and top right panels of Fig. 6. After m iterations, we obtain the state $|\psi_m\rangle = a_m|\zeta\rangle + a_{*m}|z_*\rangle$, where $|a_m|^2 + |a_{*m}|^2 = 1$. Iteration $m+1$ gives:

$$\begin{aligned} \mathcal{Q}_*|\psi_m\rangle &= \Big(I - 2|z_*\rangle\langle z_*|\Big)|\psi_m\rangle = \frac{a_m\sqrt{N}}{\sqrt{N-1}}|\psi_0\rangle - \frac{a_m + a_{*m}\sqrt{N-1}}{\sqrt{N-1}}|z_*\rangle\ , \\ |\psi_{m+1}\rangle &= \mathcal{Q}_+\mathcal{Q}_*|\psi_m\rangle = a_{m+1}|\zeta\rangle + a_{*m+1}|z_*\rangle\ , \end{aligned} \tag{39}$$

where

$$a_{m+1} = \frac{a_m(N-2) - 2a_{*m}\sqrt{N-1}}{N}\,, \tag{40}$$

$$a_{*m+1} = \frac{2a_m(N-1) + a_{*m}(N-2)\sqrt{N-1}}{N\sqrt{N-1}}\,, \tag{41}$$

see the top and middle panels of Fig. 6 for the first 4 iterations. Therefore, starting from the initial values $a_0 = \sqrt{N-1}/\sqrt{N}$ and $a_{*0} = 1/\sqrt{N}$, we can calculate the amplitudes a_m and a_{*m} of the m-th application of $\mathcal{Q}_+\mathcal{Q}_*$ recursively, see bottom panel of Fig. 6. To find how many iterations are needed, we first calculate the initial angle between $|z_*\rangle$ and $|\psi_0\rangle$ which can be expressed as $\pi/2 - \theta_{\rm ini}$, where $\theta_{\rm ini} \ll \pi/2$ is the angle between $|\zeta\rangle$ and $|\psi_0\rangle$:

$$\cos\left(\frac{\pi}{2} - \theta_{\rm ini}\right) = \frac{\langle s|z_*\rangle}{\sqrt{\langle s|s\rangle}\sqrt{\langle z_*|z_*\rangle}} \quad\Rightarrow\quad \sin\theta_{\rm ini} = \frac{1}{\sqrt{N}} \quad\Rightarrow\quad \theta_{\rm ini} \simeq \frac{1}{\sqrt{N}}\,. \tag{42}$$

Then, note that every iteration rotates the vector $|\psi_m\rangle$ towards $|z_*\rangle$ (giving the vector $|\psi_{m+1}\rangle$) by a constant angle $\theta \simeq 2\theta_{\rm ini}$:

$$\cos\theta = \frac{\langle\psi_{m+1}|\psi_m\rangle}{\sqrt{\langle\psi|\psi\rangle}\sqrt{\langle\psi_{m+1}|\psi_{m+1}\rangle}} \quad\Rightarrow\quad 1 - \frac{\theta^2}{2} \simeq a_{m+1}a_m + a_{*m+1}a_{*m} \quad\Rightarrow\quad \theta \simeq \frac{2}{\sqrt{N}}\,. \tag{43}$$

The required number of iterations can be found by equating the initial angle between ψ_0 and $|z_*\rangle$, $\pi/2 - \theta_{\rm ini}$, with m rotations, $m\theta$, needed to align $|\psi_m\rangle$ with $|z_*\rangle$:

$$m\theta = \frac{\pi}{2} - \theta_{\rm ini} \quad\Rightarrow\quad m \simeq \frac{\pi\sqrt{N} - 2}{4}\,, \tag{44}$$

see bottom panel of Fig. 6 (further iterations reduce the probability of $|z_*\rangle$ because the amplitudes a_m and a_{*m} are periodic functions).

C Operator $\mathcal{Q}_*$

C.1 Additional properties of the operators $\mathcal{B}_k$

The application of $\mathcal{B}_k$ on a K-qubit register gives:

$$\mathcal{B}_k|\mathrm{b}_{K-1}...\mathrm{b}_k...\mathrm{b}_1\mathrm{b}_0\rangle = |\mathrm{b}_{K-1}\rangle\otimes\cdots\otimes\mathcal{B}_k|\mathrm{b}_k\rangle\otimes\cdots\otimes|\mathrm{b}_1\rangle\otimes|\mathrm{b}_0\rangle = x_k|\mathrm{b}_{K-1}...\mathrm{b}_k...\mathrm{b}_1\mathrm{b}_0\rangle\ . \tag{45}$$

The operators $\mathcal{B}_k$ commute with each other:

$$\begin{aligned} [\mathcal{B}_{k_1},\mathcal{B}_{k_2}]|\mathrm{b}_{K-1}...\mathrm{b}_0\rangle &= (\mathcal{B}_{k_1}\mathcal{B}_{k_2} - \mathcal{B}_{k_2}\mathcal{B}_{k_1})|\mathrm{b}_{K-1}...\mathrm{b}_0\rangle = b_{k_2}\mathcal{B}_{k_1}|\mathrm{b}_{K-1}...\mathrm{b}_0\rangle - b_{k_1}\mathcal{B}_{k_2}|\mathrm{b}_{K-1}...\mathrm{b}_0\rangle \\ &= (b_{k_2}b_{k_1} - b_{k_1}b_{k_2})|\mathrm{b}_{K-1}...\mathrm{b}_0\rangle = 0\,|\mathrm{b}_{K-1}...\mathrm{b}_0\rangle\ , \end{aligned} \tag{46}$$

and also have the following useful property:

$$\mathcal{B}_k^n|\mathrm{b}_{K-1}...\mathrm{b}_1\mathrm{b}_0\rangle = b_k^n|\mathrm{b}_{K-1}...\mathrm{b}_1\mathrm{b}_0\rangle = b_k|\mathrm{b}_{K-1}...\mathrm{b}_1\mathrm{b}_0\rangle = \mathcal{B}_k|\mathrm{b}_{K-1}...\mathrm{b}_1\mathrm{b}_0\rangle\ . \tag{47}$$

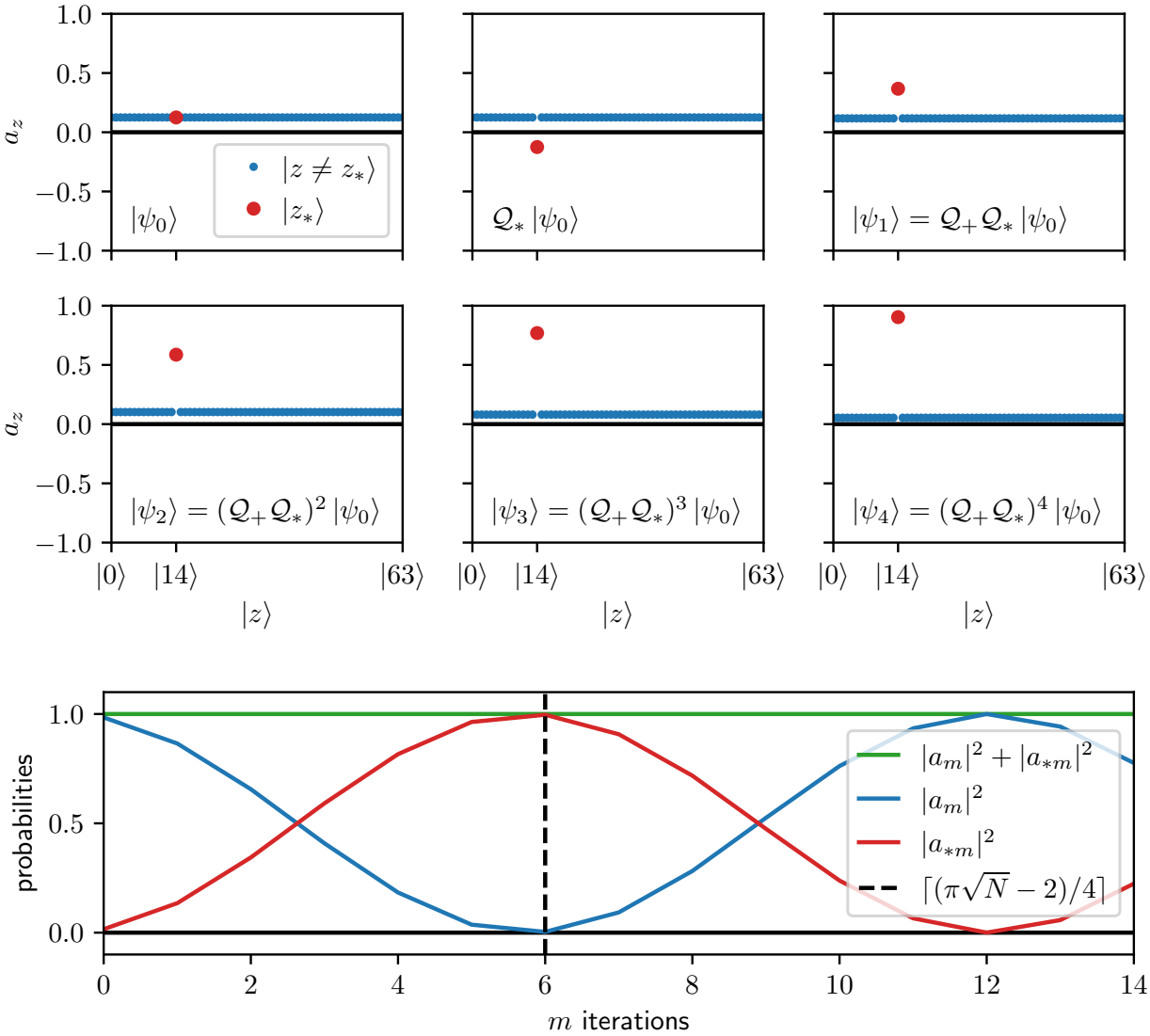

Figure 6: QUSA example for $K = 6$ (i.e. $N = 2^K = 64$ qubits representing the integers $z = \{0, 1, ..., 63\}$) with $u(z_* = 14) = 1$ and $u(z \neq 14) = 0$. Top panels: uniform superposition (left, Eq. 5), followed by the application of $\mathcal{Q}_*$ (middle, Eq. 37) and $\mathcal{Q}_+$ (right, Eq. 38), where the amplitude of the state $|14\rangle$ is shown with a red dot and that of all other states with blue. Middle panels: the amplification of the amplitude of $|14\rangle$ after 2 (left), 3 (middle), and 4 (right) iterations (i.e. 2, 3, and 4 applications of the operator $\mathcal{Q}_+\mathcal{Q}_*$, respectively, see Eq. 39). Bottom panel: amplitude amplification of $|z_*\rangle$ (red line, Eq. 41), the opposite effect for all other states (blue line, Eq. 40), and the optimal number of iterations (black dashed line, Eq. 44), which, for this example, is $\lceil(\pi\sqrt{N} - 2)/4\rceil = 6$.

C.2 Operator $\mathcal{Q}_*$ as reflection

$$
\begin{aligned}
Q_* \left|z\right\rangle &= \lim_{n\to\infty} e^{i\pi\mathcal{G}^n} \left|z\right\rangle = \lim_{n\to\infty} \left[I + i\pi\mathcal{G}^n + \frac{1}{2}i^2\pi^2 \left(\mathcal{G}^n\right)^2 + \cdots\right] \left|z\right\rangle \\
&= \lim_{n\to\infty} \left[1 + i\pi g(\mathbf{x})^n + \frac{1}{2}i^2\pi^2 \left[g(\mathbf{x})^n\right]^2 + \cdots\right] \left|z\right\rangle = \left[1 + i\pi u(z) + \frac{1}{2}i^2\pi^2 u(z)^2 + \cdots\right] \left|z\right\rangle \\
&= \left[1 - u(z) + \left(1 + i\pi + \frac{1}{2}i^2\pi^2 + \cdots\right) u(z)\right] \left|z\right\rangle = \left[1 - u(z) + e^{i\pi} u(z)\right] \left|z\right\rangle \\
&= \left[1 - 2u(z)\right] \left|z\right\rangle = \left(I - 2\left|z_*\right\rangle \left\langle z_*\right|\right) \left|z\right\rangle \ , \qquad (48)
\end{aligned}
$$

where we used $u(z)^n = u(z)$. The last equation is implied from the fact that:

$$
\left[1 - 2u(z)\right] \left|z \neq z_*\right\rangle = 1 \left|z \neq z_*\right\rangle - 0 \left|z \neq z_*\right\rangle = \left|z \neq z_*\right\rangle \ , \qquad (49)
$$

$$
\left[1 - 2u(z)\right] \left|z_*\right\rangle = 1 \left|z_*\right\rangle - 2 \left|z_*\right\rangle = - \left|z_*\right\rangle \ , \qquad (50)
$$

and

$$
\left(I - 2\left|z_*\right\rangle \left\langle z_*\right|\right) \left|z \neq z_*\right\rangle = 1 \left|z \neq z_*\right\rangle - 0 \left|z \neq z_*\right\rangle = \left|z \neq z_*\right\rangle \ , \qquad (51)
$$

$$
\left(I - 2\left|z_*\right\rangle \left\langle z_*\right|\right) \left|z_*\right\rangle = 1 \left|z_*\right\rangle - 2 \left|z_*\right\rangle = - \left|z_*\right\rangle \ . \qquad (52)
$$

C.3 Operator $\mathcal{Q}_{*0}$

$$
\begin{aligned}
\mathcal{Q}_{*0} \left|z\right\rangle &= e^{i\pi\mathcal{C}_0} \left|\mathrm{b}_{K-1}...\mathrm{b}_1\mathrm{b}_0\right\rangle = \left(I + i\pi\mathcal{C}_0 + \frac{1}{2}i^2\pi^2\mathcal{C}_0^2 + \frac{1}{3!}i^3\pi^3\mathcal{C}_0^3 + \cdots\right) \left|\mathrm{b}_{K-1}...\mathrm{b}_1\mathrm{b}_0\right\rangle \\
&= \left(1 + i\pi c + \frac{1}{2}i^2\pi^2 c^2 + \frac{1}{3!}i^3\pi^3 c^3 + \cdots\right) \left|\mathrm{b}_{K-1}...\mathrm{b}_1\mathrm{b}_0\right\rangle = e^{i\pi c} \left|\mathrm{b}_{K-1}...\mathrm{b}_1\mathrm{b}_0\right\rangle \\
&= P(\phi_0) \left|\mathrm{b}_{K-1}...\mathrm{b}_1\mathrm{b}_0\right\rangle \ , \qquad (53)
\end{aligned}
$$

where $\phi_0 = c\pi$.

C.4 Operator $\mathcal{Q}_{*1}$

$$
\begin{aligned}
\mathcal{Q}_{*1} \left|z\right\rangle &= e^{i\pi\mathcal{C}_1} \left|\mathrm{b}_{K-1}...\mathrm{b}_1\mathrm{b}_0\right\rangle = e^{i\pi\sum_k c_k\mathcal{B}_k} \left|\mathrm{b}_{K-1}...\mathrm{b}_1\mathrm{b}_0\right\rangle = \prod_{k=0}^{K-1} e^{i\pi c_k\mathcal{B}_k} \left|\mathrm{b}_{K-1}...\mathrm{b}_1\mathrm{b}_0\right\rangle \\
&= \prod_k \left(I + i\phi_{1,k}\mathcal{B}_k + \frac{1}{2}i^2\phi_{1,k}^2\mathcal{B}_k^2 + \frac{1}{3!}i^3\phi_{1,k}^3\mathcal{B}_k^3 + \cdots\right) \left|\mathrm{b}_{K-1}...\mathrm{b}_1\mathrm{b}_0\right\rangle \\
&= \prod_k \left(I - \mathcal{B}_k + \mathcal{B}_k + i\phi_{1,k}\mathcal{B}_k + \frac{1}{2}i^2\phi_{1,k}^2\mathcal{B}_k + \cdots\right) \left|\mathrm{b}_{K-1}...\mathrm{b}_1\mathrm{b}_0\right\rangle \\
&= \prod_k \left[I - \left(1 - e^{i\phi_{1,k}}\right)\mathcal{B}_k\right] \left|\mathrm{b}_{K-1}...\mathrm{b}_1\mathrm{b}_0\right\rangle \\
&= \prod_k \mathcal{P}_{1,k}(\phi_{1,k}) \left|\mathrm{b}_{K-1}...\mathrm{b}_1\mathrm{b}_0\right\rangle \ , \qquad (54)
\end{aligned}
$$

where $\phi_{1,k} = c_k\pi$, $\mathcal{P}_{1,k}$ is given by

$$
\mathcal{P}_{1,k}(\phi_{1,k}) = \begin{cases} I & \text{if } b_k = 0 \\ P(\phi_{1,k}) & \text{if } b_k = 1 \end{cases} \ , \qquad (55)
$$

and the proof for the last step is:

$$
\left[I - \left(1 - e^{i\phi}\right)\mathcal{B}\right] \left(a_0 \left|0\right\rangle + a_1 \left|1\right\rangle\right) = a_0 \left|0\right\rangle + e^{i\phi} a_1 \left|1\right\rangle = P(\phi) \left(a_0 \left|0\right\rangle + a_1 \left|1\right\rangle\right) \ . \qquad (56)
$$

C.5 Operator $\mathcal{Q}_{*2}$

$$
\begin{aligned}
\mathcal{Q}_{*2}\left|z\right\rangle &= e^{i\mathcal{C}_2}\left|\mathrm{b}_{K-1}...\mathrm{b}_0\right\rangle = e^{i\pi\sum_{k_1}\sum_{k_2>k_1}c_{k_1k_2}\mathcal{B}_{k_2}\mathcal{B}_{k_1}}\left|\mathrm{b}_{K-1}...\mathrm{b}_0\right\rangle \\
&= \prod_{k_1}\prod_{k_2>k_1} e^{i\phi_{2,k_1k_2}\mathcal{B}_{k_2}\mathcal{B}_{k_1}}\left|\mathrm{b}_{K-1}...\mathrm{b}_0\right\rangle \\
&= \prod_{k_1}\prod_{k_2}\left(I + i\phi_{2,k_1k_2}\mathcal{B}_{k_2}\mathcal{B}_{k_1} + \frac{1}{2}i^2\phi^2_{2,k_1k_2}\mathcal{B}^2_{k_2}\mathcal{B}^2_{k_1} + \cdots\right)\left|\mathrm{b}_{K-1}...\mathrm{b}_0\right\rangle \\
&= \prod_{k_1}\prod_{k_2}\left(I - \mathcal{B}_{k_2}\mathcal{B}_{k_1} + \mathcal{B}_{k_2}\mathcal{B}_{k_1} + i\phi_{2,k_1k_2}\mathcal{B}_{k_2}\mathcal{B}_{k_1} + \frac{1}{2}i^2\phi^2_{2,k_1k_2}\mathcal{B}_{k_2}\mathcal{B}_{k_1} + \cdots\right)\left|\mathrm{b}_{K-1}...\mathrm{b}_0\right\rangle \\
&= \prod_{k_1}\prod_{k_2}\left[I - \left(1 - e^{i\phi_{2,k_1k_2}}\right)\mathcal{B}_{k_2}\mathcal{B}_{k_1}\right]\left|\mathrm{b}_{K-1}...\mathrm{b}_0\right\rangle \\
&= \prod_{k_1}\prod_{k_2}\left[1 - \left(1 - e^{i\phi_{2,k_1k_2}}\right)b_{k_2}b_{k_1}\right]\left|\mathrm{b}_{K-1}...\mathrm{b}_0\right\rangle \\
&= \prod_{k_1}\prod_{k_2}\mathcal{P}_{2,k_1k_2}(\phi_{2,k_1k_2})\left|\mathrm{b}_{K-1}...\mathrm{b}_0\right\rangle\ ,
\end{aligned}
\tag{57}
$$

where $\phi_{2,k_1k_2} \equiv c_{k_1k_2}\pi$ and

$$
\mathcal{P}_{2,k_1k_2}(\phi_{2,k_1k_2}) = \begin{cases} I & \text{if } b_{k_1}b_{k_2} = 0 \\ P(\phi_{2,k_1k_2}) & \text{if } b_{k_1}b_{k_2} = 1 \end{cases}\ . \tag{58}
$$

C.6 Operator $\mathcal{Q}_{*j}$

$$
\begin{aligned}
\mathcal{Q}_{*j}\left|z\right\rangle &= e^{i\pi\mathcal{C}_j}\left|\mathrm{b}_{K-1}...\mathrm{b}_0\right\rangle = \exp\left(i\pi\sum_{k_1}\cdots\sum_{k_j>k_1,...k_{j-1}}c_{k_1...k_j}\mathcal{B}_{k_j}\cdots\mathcal{B}_{k_1}\right)\left|\mathrm{b}_{K-1}...\mathrm{b}_0\right\rangle \\
&= \prod_{k_j}\cdots\prod_{k_1} e^{i\phi_{j,k_1...k_j}\mathcal{B}_{k_j}\cdots\mathcal{B}_{k_1}}\left|\mathrm{b}_{K-1}...\mathrm{b}_0\right\rangle \\
&= \prod_{k_j}\cdots\prod_{k_1}\left(I + i\phi_{j,k_1...k_j}\mathcal{B}_{k_j}\cdots\mathcal{B}_{k_1} + \frac{1}{2}i^2\phi^2_{j,k_1...k_j}\mathcal{B}^2_{k_j}\cdots\mathcal{B}^2_{k_1} + \cdots\right)\left|\mathrm{b}_{K-1}...\mathrm{b}_0\right\rangle \\
&= \prod_{k_j}\cdots\prod_{k_1}\left(I - \mathcal{B}_{k_j}\cdots\mathcal{B}_{k_1} + \mathcal{B}_{k_j}\cdots\mathcal{B}_{k_1} + i\phi_{j,k_1...k_j}\mathcal{B}_{k_j}\cdots\mathcal{B}_{k_1} + \cdots\right)\left|\mathrm{b}_{K-1}...\mathrm{b}_0\right\rangle \\
&= \prod_{k_j}\cdots\prod_{k_1}\left[I - \left(1 - e^{i\phi_{j,k_1...k_j}}\right)\mathcal{B}_{k_j}\cdots\mathcal{B}_{k_1}\right]\left|\mathrm{b}_{K-1}...\mathrm{b}_0\right\rangle \\
&= \prod_{k_j}\cdots\prod_{k_1}\left[I - \left(1 - e^{i\phi_{j,k_1...k_j}}\right)\prod_{l=1}^{j}b_{k_l}\right]\left|\mathrm{b}_{K-1}...\mathrm{b}_0\right\rangle \\
&= \prod_{k_j}\cdots\prod_{k_1}\mathcal{P}_{j,k_1...k_j}(\phi_{j,k_1...k_j})\left|\mathrm{b}_{K-1}...\mathrm{b}_0\right\rangle\ ,
\end{aligned}
\tag{59}
$$

where $\phi_{j,k_1...k_j} \equiv c_{k_1...k_j}\pi$ and

$$
\mathcal{P}_{j,k_1...k_j}(\phi_{j,k_1...k_j}) = \begin{cases} I & \text{if } \prod_{l=1}^{j}b_{k_l} = 0 \\ P(\phi_{j,k_1...k_n}) & \text{if } \prod_{l=1}^{j}b_{k_l} = 1 \end{cases}\ . \tag{60}
$$

The corresponding quantum gates for $k_1 < k_2 < \cdots < k_j$ is:

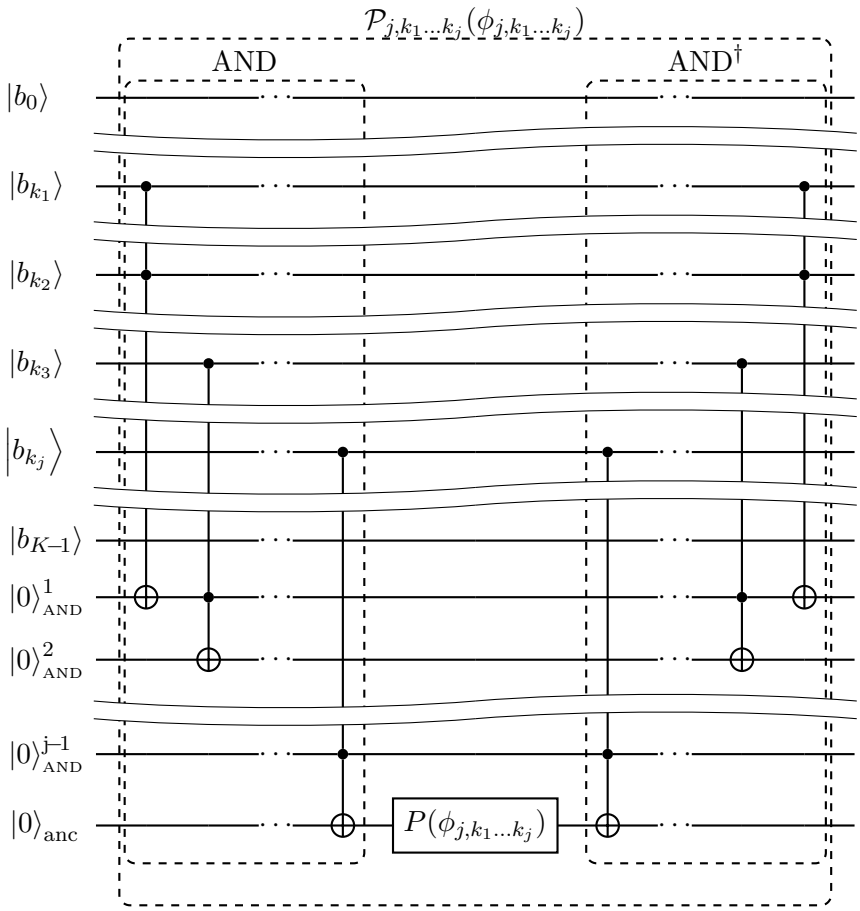

where AND = AND† is an operator that flips the ancilla qubit if $b_{k_1} = b_{k_2} = \cdots = b_{k_j} = 1$.

D The objective function example

We can calculate the explicit form of Eq. (33) as follows:

$$\begin{aligned} f(\mathbf{x}) &= N_{\text{p}}^2 \left(\mu_{\text{p}} - \mu_{\text{b}}\right)^2 + N_{\text{p}}^4 \left(\sigma_{\text{p}}^2 - \sigma_{\text{b}}^2\right)^2 + \left(N_{\text{p}} - N_{\text{b}}\right)^2 \\ &= \left(\sum_i x_i \mu_i - \sum_i x_i \mu_{\text{b}}\right)^2 + \left(\sum_i \sum_j x_i x_j \sigma_i \sigma_j \rho_{ij} - \sum_i \sum_j x_i x_j \sigma_{\text{b}}^2\right)^2 + \left(\sum_i x_i - N_{\text{b}}\right)^2 \\ &= N_{\text{b}}^2 - 2 \sum_i x_i N_{\text{b}} + \sum_i \sum_j x_i x_j \left(1 + \mu_{\text{b}}^2 - 2\mu_i \mu_{\text{b}} + \mu_i \mu_j\right) \\ &\quad + \sum_i \sum_j \sum_k \sum_l x_i x_j x_k x_l \left(\sigma_{\text{b}}^4 - 2\sigma_i \sigma_j \rho_{ij} \sigma_{\text{b}}^2 + \sigma_i \sigma_j \sigma_k \sigma_l \rho_{ij} \rho_{kl}\right) . \end{aligned} \tag{61}$$

For four assets, the function is:

$$\begin{aligned} f(x_{\text{A}}, x_{\text{B}}, x_{\text{C}}, x_{\text{D}}) &= w + w_{\text{A}} x_{\text{A}} + w_{\text{B}} x_{\text{B}} + w_{\text{B}} x_{\text{C}} + w_{\text{B}} x_{\text{D}} \\ &+ w_{\text{AB}} x_{\text{A}} x_{\text{B}} + w_{\text{AC}} x_{\text{A}} x_{\text{C}} + w_{\text{AD}} x_{\text{A}} x_{\text{D}} + w_{\text{BC}} x_{\text{B}} x_{\text{C}} + w_{\text{BD}} x_{\text{B}} x_{\text{D}} + w_{\text{CD}} x_{\text{C}} x_{\text{D}} \\ &+ +w_{\text{ABC}} x_{\text{A}} x_{\text{B}} x_{\text{C}} + w_{\text{ABD}} x_{\text{A}} x_{\text{B}} x_{\text{D}} + w_{\text{ACD}} x_{\text{A}} x_{\text{C}} x_{\text{D}} + w_{\text{BCD}} x_{\text{B}} x_{\text{C}} x_{\text{D}} + w_{\text{ABCD}} x_{\text{A}} x_{\text{B}} x_{\text{C}} x_{\text{D}} . \end{aligned} \tag{62}$$

Similarly the functions $g(\mathbf{x})$ and $g(\mathbf{x})^n = u_n(z)$ are:

$$g(\mathbf{x}) = c_1 + c_{1,\text{A}} x_{\text{A}} + \cdots + c_{1,\text{ABCD}} x_{\text{A}} x_{\text{B}} x_{\text{C}} x_{\text{D}} \quad \text{and} \quad g(\mathbf{x})^n = c_n + c_{n,\text{A}} x_{\text{A}} + \cdots + c_{n,\text{ABCD}} x_{\text{A}} x_{\text{B}} x_{\text{C}} x_{\text{D}}. \tag{63}$$

E Quantum circuit

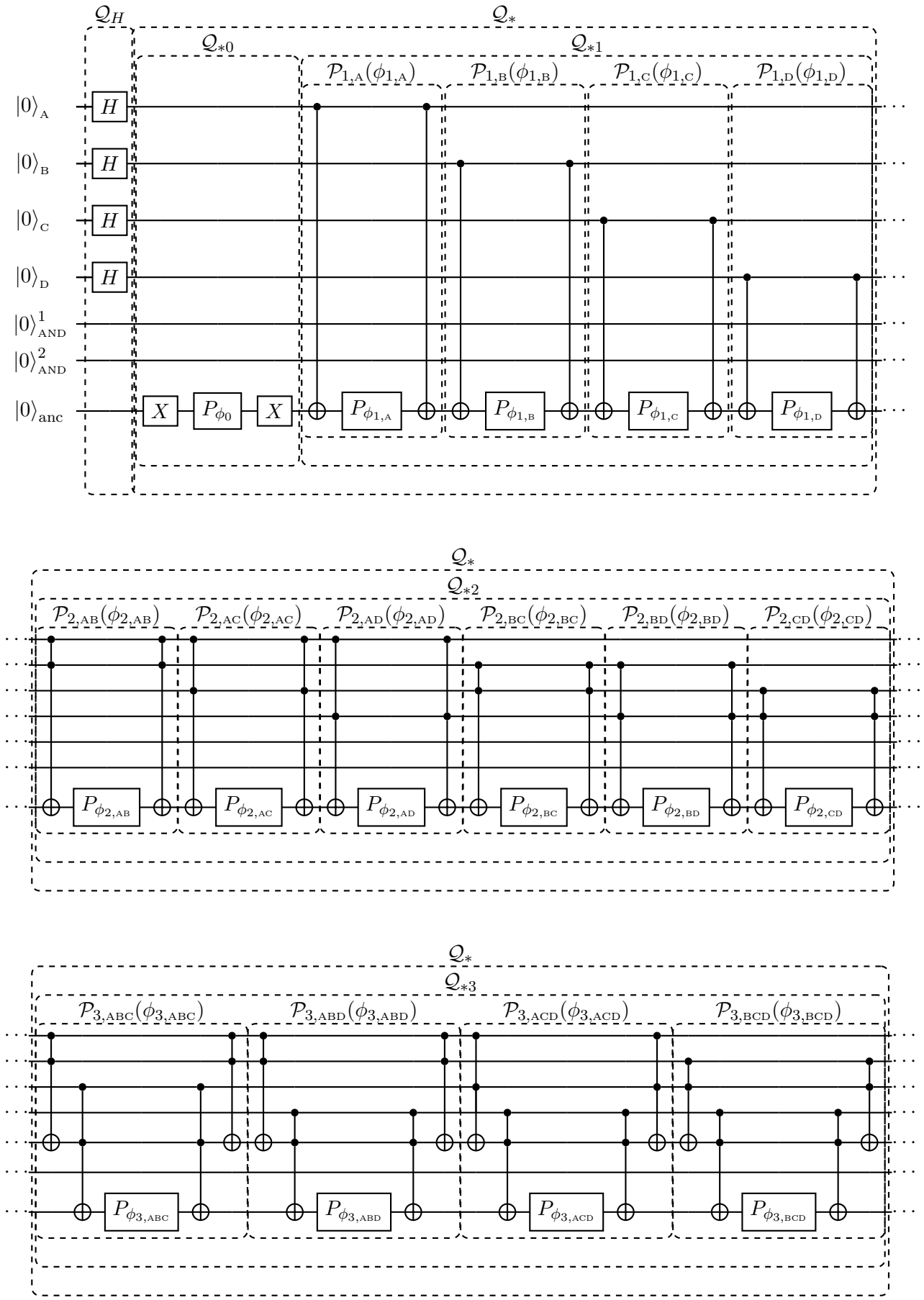

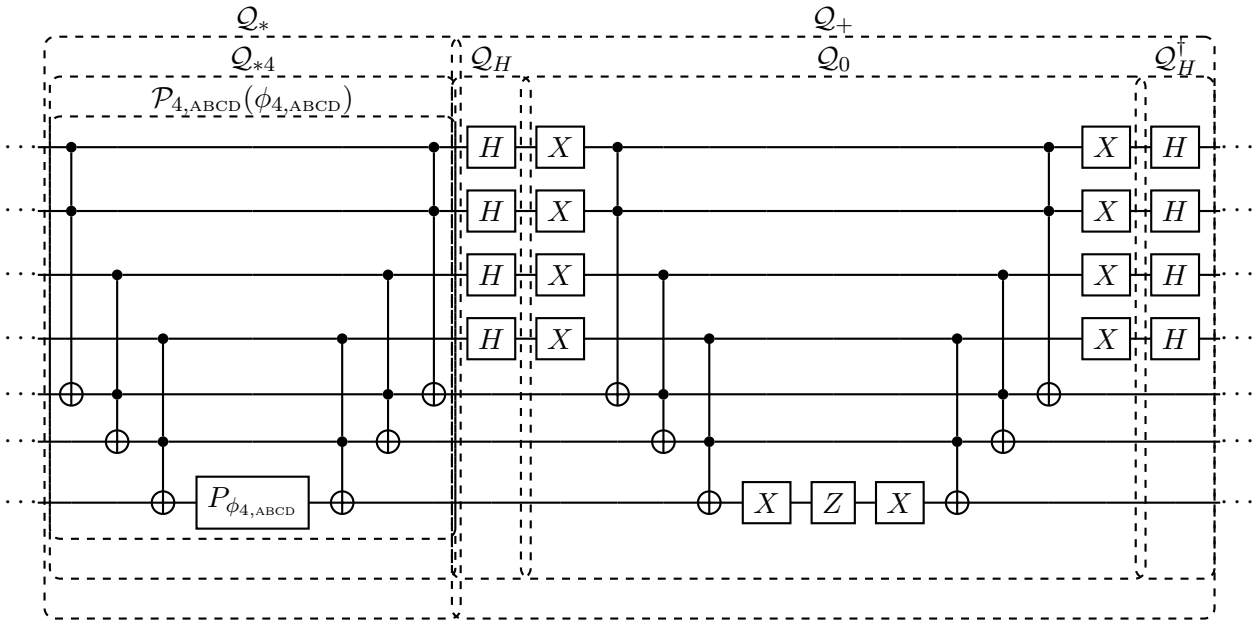
$\mathcal{Q}_*$
$\mathcal{Q}_+$
$\mathcal{Q}_{*4}$
$\mathcal{Q}_H$
$\mathcal{Q}_0$
$\mathcal{Q}_H^\dagger$
$\mathcal{P}_{4,\mathrm{ABCD}}(\phi_{4,\mathrm{ABCD}})$
H
X
Z
$P_{\phi_{4,\mathrm{ABCD}}}$