Quantum Information Processing (2026) 25:66
https://doi.org/10.1007/s11128-026-05085-5

Qnnformer: quantum-enhanced neural networks with multi-attention mechanisms for long-term time series forecasting

Yongli Tang[1] · Zhongqi Cai[1] · Yue Zhang[1] · Zhenlun Gao[1] · Jinxia Yu[2]

Received: 21 May 2025 / Accepted: 27 January 2026 / Published online: 13 February 2026
© The Author(s), under exclusive licence to Springer Science+Business Media, LLC, part of Springer Nature 2026

Abstract
Long time series forecasting is essential in domains such as traffic flow analysis, energy management, and financial modeling. Despite the progress in this area, existing methodologies encounter significant challenges in addressing the elevated computational complexity and excessive memory requirements associated with large-scale time series data, thereby constraining their applicability to long-term forecasting tasks. This study proposes QNNformer, a quantum-enhanced model that integrates quantum neural networks(QNNs) with a quantum multi-attention mechanism to address these limitations. By leveraging quantum computing principles, including parallelism, superposition, and interference, QNNformer effectively captures complex nonlinear relationships and extended temporal dependencies. The model incorporates advanced quantum optimization techniques, including the quantum approximate optimization algorithm and grover diffusion operations, to enhance its capacity for long-term dependency modeling. Empirical evaluations demonstrate that QNNformer achieves state-of-the-art performance in various time series prediction tasks, significantly improving prediction accuracy, computational efficiency, and robustness when handling high-dimensional, noisy, and complex time series datasets. Extensive experiments on seven real-world datasets demonstrate that QNNformer achieves the state-of-the-art performance, outperforming the best baseline by an average of 3.9% and 3.0% in MSE and MAE, respectively.

Keywords Long time series prediction · Quantum neural networks · Quantum multi-head attention mechanisms · Quantum computing

✉ Yue Zhang
y_zhang@hpu.edu.cn

1 School of Software, Henan Polytechnic University, Jiaozuo 454000, Henan, China

2 School of Computer Science and Technology, Henan Polytechnic University, Jiaozuo 454000, Henan, China

1 Introduction

Long-term time series forecasting is a crucial task aimed at predicting future trends over an extended period by leveraging substantial historical time series data. Long-term time series forecasting applications span a wide range of domains, including traffic [1] flow estimation, energy management [2], and financial investment [3]. Current time series models are not optimally equipped to efficiently handle high-dimensional complex data, nor to capture intricate nonlinear relationships. Furthermore, these models are prone to computational bottlenecks in optimization and training when dealing with large-scale datasets.

In recent years, overcoming the computational challenges of time series forecasting, especially with high-dimensional and complex datasets, has become a major focus of the field. To overcome these challenges, researchers have proposed various strategies to improve the efficiency and accuracy of time series models. One prominent approach involves decomposing time series into distinct components (e.g., trend, seasonality, and residuals) and applying specialized deep learning methods to model each component, thereby enhancing the model's ability to capture underlying patterns. Another direction emphasizes the design of novel architectures to better capture long-term dependencies and complex spatiotemporal patterns, leading to improved forecasting performance. In addition, advanced techniques such as generative models and self-supervised learning have been used to address issues such as data scarcity and pattern complexity, ultimately increasing the efficiency of model generalization and optimization.

Despite these advances, significant challenges remain in time series modeling. Existing methods often suffer from the curse of dimensionality and computational inefficiency, [4–6] especially when dealing with high-dimensional and large datasets. Achieving a balance between training efficiency and prediction accuracy remains a critical hurdle. In addition, while traditional decomposition methods effectively extract trends and seasonal components, they often miss hidden multi-frequency patterns, resulting in incomplete decoupling and suboptimal performance [7–10], especially when modeling complex nonlinear relationships. Furthermore, despite their ability to capture long-term dependencies, deep learning models struggle to model multi-scale and multi-frequency patterns simultaneously. In multi-layer stacked architectures, information dissipation across layers further limits performance in complex predictive tasks [11, 12].

Quantum neural networks [13] offer significant advantages in tackling challenges such as high-dimensional complexity, nonlinear relationships, and computational bottlenecks in time series data [14]. By harnessing quantum superposition and entanglement, quantum neural networks enable efficient parallel processing in high-dimensional spaces, alleviating the curse of dimensionality. Their ability to model intricate nonlinear relationships is further enhanced by quantum optimization algorithms like variational quantum algorithms [15]), which accelerate training and improve overall efficiency [15]). Additionally, quantum polymorphism facilitates flexible modeling of multi-frequency and multi-scale patterns, effectively decoupling complex temporal structures in time series data. Recent advancements have demonstrated the potential of integrating quantum neural networks with artificial intelligence

methods in fields such as image processing and natural language processing [16, 17], where quantum-enhanced models improve both efficiency and accuracy [17, 18]. However, current efforts remain in the early stages, with many approaches limited to experimental settings or specific use cases. A comprehensive framework to fully exploit the synergy between quantum computing and neural networks, especially for large datasets, is still lacking, and further research is needed to overcome these challenges and enable the practical application of quantum neural networks in complex modeling tasks.

In order to address the aforementioned issues, it is proposed that the quantum multi-attention mechanism [18] be integrated within the QNNformer model. Conventional temporal models frequently encounter issues of information loss and insufficient representation when confronted with long-term dependencies. The quantum multi-attention mechanism utilzses the parallel processing capabilities of quantum computing, performing attention computation through quantum states. This approach leads to a substantial enhancement in the model's capacity to capture intricate dependencies. The phenomenon of quantum superposition and interference serves to enhance the nonlinear mapping capability of each attention head, thereby improving the model's accuracy in identifying long-time dependencies and global patterns. In the context of noisy or fluctuating temporal data, the efficacy of quantum multi-attention mechanism in enhancing the robustness and prediction accuracy of the model is further accentuated, thereby enhancing the model's adaptability and accuracy in complex long-term prediction tasks. The integration of quantum neural networks and quantum multi-attention mechanism serves to effectively address the limitations of traditional temporal models in dealing with long-time dependencies [19, 20], thereby demonstrating the potential of quantum computing in temporal prediction. For a more comprehensive understanding of the proposed architecture and the synergy between its components, we illustrate the detailed workflow of QNNformer in Fig. 1.

The major contributions of this work are outlined as follows:

- We propose a quantum multi-attention mechanism to replace the traditional self-attention module. By leveraging quantum parallelism and entanglement, this mechanism significantly enhances the capability to capture global dependencies in high-dimensional time series data.
- We design the QNNformer architecture, which utilizes quantum neural networks to map time series segments into high-dimensional quantum states. This approach effectively captures complex nonlinear patterns and improves local feature representation compared to conventional methods.
- We integrate advanced quantum optimization techniques, specifically grover diffusion and quantum approximate optimization algorithm, to optimize the learning process. Extensive experiments demonstrate that QNNformer achieves state-of-the-art performance in accuracy and robustness across various real-world datasets.

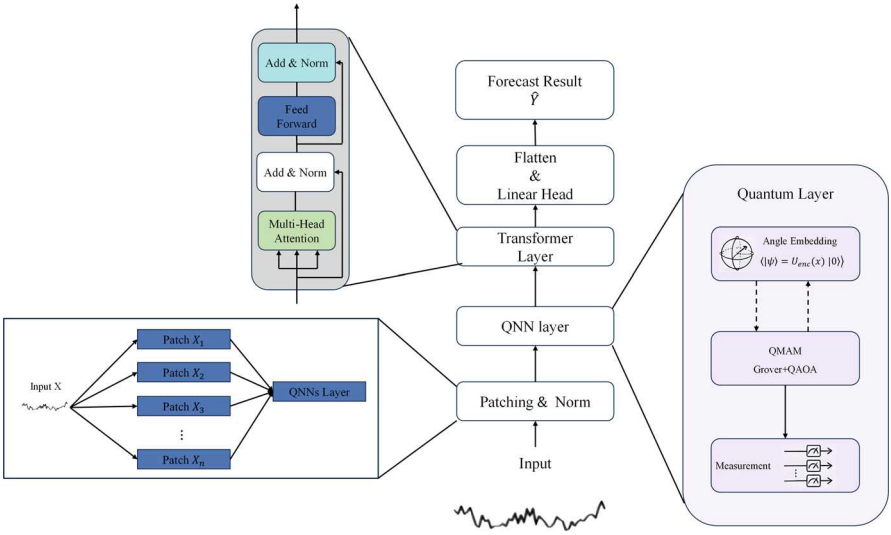

Fig. 1 The overall workflow of the proposed QNNformer. The model integrates a quantum neural networks layer for feature embedding and a quantum multi-attention mechanism with classical Transformer components to handle long-term time series forecasting

2 Related work

2.1 Quantum neural networks

Quantum neural networks have emerged as a promising approach to exploit quantum computing to overcome the limitations of classical neural networks in handling high-dimensional and complex data sets [21, 22]. Recent studies have shown that quantum neural networks can efficiently process large amounts of data and model intricate non-linear relationships by exploiting quantum superposition and entanglement properties. These properties enable quantum neural networks to capture underlying patterns in time series data more effectively than classical methods. Applications of quantum neural networks have been explored in various fields, including image recognition [23], natural language processing [24, 25], and financial forecasting [26], where they show improved computational efficiency and predictive accuracy.

Despite these advances, challenges remain in the practical application of quantum neural networks. For example, traditional quantum neural networks architectures often struggle with multi-scale and multi-frequency time series data [27], especially when modeling long-term dependencies in noisy and high-dimensional environments [28]. In addition, the optimization of quantum circuit parameters and the stability of the training process under quantum noise are key issues that require further investigation [25, 29]. These challenges highlight the need for novel architectural innovations and improved optimization techniques to fully exploit the potential of quantum neural networks.

In our work, we address these gaps by proposing the QNNformer architecture, which incorporates the quantum multi-attention mechanism. By integrating quantum multi-attention mechanism, QNNformer improves the ability to model long-term dependencies and capture complex relationships in time series data with enhanced robustness and accuracy. Empirical results show that QNNformer outperforms traditional quantum neural networks in both prediction accuracy and computational efficiency, especially for noisy and high-dimensional datasets. These results highlight the transformative potential of quantum-enhanced models in time series forecasting.

2.2 Grover search algorithm and quantum approximate optimization algorithm

In quantum computing, the grover search algorithm and the quantum approximate optimization algorithm have demonstrated significant advantages in database search and combinatorial optimisation problems, respectively. The Grover algorithm exploits quantum superposition and interference through diffusion and oracle operations to achieve a quadratic speedup over classical search algorithms [30]. Meanwhile, quantum approximate optimization algorithm [31] constructs parameterized quantum circuits that combine cost and hybrid layers, enabling efficient approximation of near-optimal solutions for problems such as the maximum cut and traveling salesperson problems (Farhi et al., 2014). These algorithms highlight the potential of quantum computing to accelerate complex optimization tasks.

In our work, we propose an innovative integration of grover's search mechanism and quantum approximate optimization algorithm within the quantum neural networks framework. By incorporating grover's mechanism, the optimization process for quantum circuits is significantly accelerated, thereby enhancing the efficiency of quantum neural networks in processing complex and high-dimensional time series data. The integration of quantum approximate optimization algorithm's optimization structure further improves computational efficiency, especially in modeling multi-frequency and multi-scale time series patterns. Comparative experiments show that the integrated quantum neural networks outperforms traditional quantum neural networks methods in terms of optimization efficiency and training speed, and achieves superior accuracy in large-scale and complex time series prediction tasks. These results highlight the potential of combining quantum search and optimisation techniques to advance quantum neural networks applications in both time series prediction and optimization.

2.3 Transformer-based long-term time series forecasting

In recent years, a significant number of studies have been dedicated to the application of transformer models in the context of long-term time series forecasting. LogTrans [3] has been shown to effectively capture local information and substantially reduce spatial complexity by incorporating a convolutional self-attention layer and LogSparse design, a technique that has proven particularly effective in dealing with long series. Informer [32] proposes the ProbSparse self-attention mechanism, which combines with the distillation technique to efficiently filter out the most important key values, which further reduces the computational complexity and improves the prediction

accuracy.Autoformer [33] utilizes decomposition and autocorrelation concepts from traditional time series analysis methods, employing an automatic approach to capture intrinsic patterns in the time series. This enhances the model's capacity to adapt to periodicity and trend. FEDformer [34] employs Fourier augmentation structure, thereby enabling the model to attain linear complexity in the forecasting process and effectively enhancing the time series modeling capability. Pyraformer [35] utilizes a pyramidal attention module that combines intra and interscale connections to enhance the ability to capture multi-level time series features while reducing computational complexity. The majority of these approaches focus on reducing the complexity of the original attention mechanism, thus demonstrating better performance in long-term prediction tasks. However, the majority of extant models continue to rely on point-to-point attentional mechanisms, thus ignoring the global semantics of the information within the time series segments. This may result in limitations in capturing long-term dependencies.

In our work, quantum neural networks have been shown to overcome the limitations of traditional self-attention mechanisms by utilizing quantum superposition and entanglement effects and are able to handle high-dimensional data and complex patterns more effectively. The quantum multi-attention mechanism proposed in this study enhances the ability to model long-time dependencies and nonlinear relationships in time series data through the parallelism and interference effects of quantum computing. This improves the prediction accuracy and robustness of the model, especially in noisy or fluctuating data.

3 Methodology

3.1 Problem formulation

In this work, we address the following task: Given a set of multivariate time series instances with a historical lookback window $L : (x_1, \cdots, x_L)$ where each x_i at time step t represents a vector of M variables. Our objective is to make predictions for the subsequent T ime steps, resulting in the prediction sequence $(x_{L+1,\cdots,}x_{L+T})$.

From the perspective of channel independence, the multivariate time series $(x_1, \cdots, x_L)$ is split to M univariate series $x^{(i)} \in \mathbb{R}^{1\times L}$. We consider the i-th univariate series of length L as $x^{(i)}_{1:L} = (x^{(i)}_1, \cdots, x^{(i)}_{L+T})$ where i where $i = 1, \cdots, M$. These univariate series are independently fed into the model. At last, the networks provide prediction results $\hat{x}^{(i)} = (\hat{x}^{(i)}_{L+1}, \cdots, \hat{x}^{(i)}_{L+T}) \in \mathbb{R}^{1\times T}$ accordingly.

3.2 Transformer structure

We consider the following problem: given a collection of multivariate time series samples with lookback window $L : (x_1, \cdots, x_L)$ where each x_t at time step t is a vector of dimension M, we would like to forecast T future values $(x_{L+1}, \cdots, x_{L+T})$. Our QNNformer is illustrated in Fig. 2 where the model makes use of the vanilla transformer encoder as its core architecture.

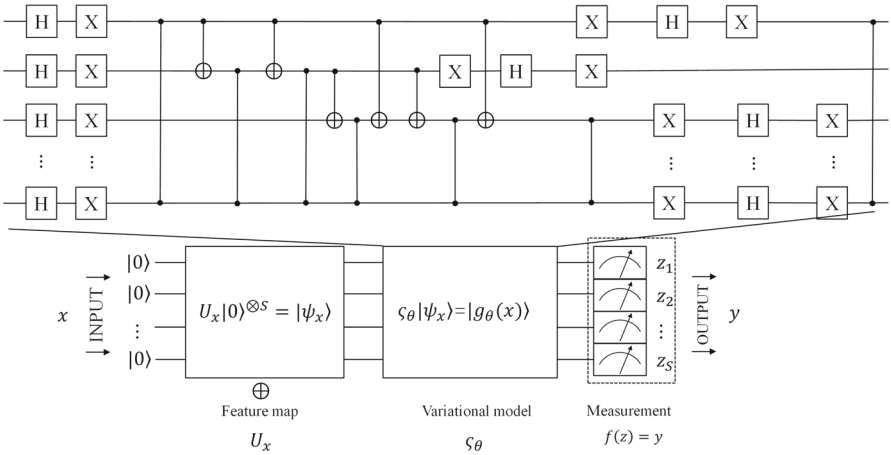

Fig. 2 The quantum neural networks structure

3.2.1 Patching

Each input univariate time series $x^{(i)}$ is first divided into patches which can be either overlapped or non-overlapped. Denote the patch length as P and the stride - the non-overlapping region between two consecutive patches as S, then the patching process will generate the a sequence of patches $x_p^{(i)} \in \mathbb{R}^{P\times N}$ where N s the number of patches, $N = \left\lfloor \frac{(L-P)}{S} \right\rfloor + 2$. Here, we pad S repeated numbers of the last value $x_L^{(i)} \in \mathbb{R}$ to the end of the original sequence before patching. With the use of patches, the number of input tokens can reduce from L to approximately L/S. This implies that the memory usage and computational complexity of the attention map are quadratically decreased by a factor of S. Thus, constrained on the training time and GPU memory, patch design can allow the model to see the longer historical sequence, which can significantly improve the forecasting performance.

Transformer encoder: We use a vanilla transformer encoder that maps the observed signals to the latent representations. The patches are mapped to the Transformer latent space of dimension D via a trainable linear projection $W_p \in \mathbb{R}^{D\times P}$, and a learnable additive position encoding $W_{pos} \in \mathbb{R}^{D\times N}$ is applied to monitor the temporal order of patches:$x_d^{(i)} = W_p x_p^{(i)} + W_{pos}$, where $x_d^{(i)} \in \mathbb{R}^{D\times N}$ denotes the input that will be fed into Transformer encoder in Fig. 2. Then, each head $h = 1, \cdots, H$ in multi-head attention will transform them into query matrices $Q_h^{(i)} = (x_d^{(i)})^T W_h^Q$, key matrices $K_h^{(i)} = (x_d^{(i)})^T W_h^K$ and value matrices $V_h^{(i)} = (x_d^{(i)})^T W_h^V$, where $W_h^Q,\ W_h^K \in \mathbb{R}^{D\times d_k}$ and $W_h^V \in \mathbb{R}^{D\times D}$. After that a scaled production is used for getting attention output $O_h^{(i)} \in \mathbb{R}^{D\times N}$;

$$\left(O_{h,j}^{(i)}\right)^T = Attention\left(O_{h,j}^{(i)}, K_{h,j}^{(i)}, V_{h,j}^{(i)}\right)$$

$$= Softmax(\frac{O_{h,j}^{(i)} K_{h,j}^{(i)\,T}}{\sqrt{d_k}}) V_{h,j}^{(i)} \tag{1}$$

The multi-head attention block also includes BatchNorm layers and a feed-forward network with residual connections as shown in Fig. 2. Afterward, it generates the representation denoted as $z^{(i)} \in \mathbb{R}^{D \times N}$. Finally, a flatten layer with linear head is used to obtain the prediction result $\hat{x}^{(i)} = (\hat{x}_{L+1}^{(i)}, \cdots, \hat{x}_{L+T}^{(i)}) \in \mathbb{R}^{1 \times T}$.

3.2.2 Loss function

We choose to use the MSE loss to measure the discrepancy between the prediction and the ground truth. The loss in each channel is gathered and averaged over M ime series to get the overall objective loss:$L = E_x \frac{1}{M} \sum_{i=1}^{M} \left\| \boldsymbol{x}_{L+1:L+T}^{(i)} - \hat{\boldsymbol{x}}_{L+1:L+T}^{(i)} \right\|_2^2$.

3.2.3 Instance normalization

This technique has recently been proposed to help mitigating the distribution shift effect between the training and testing data [36, 37]. It simply normalizes each time series instance $x^{(i)}$ with zero mean and unit standard deviation. In essence, we normalize each $x^{(i)}$ before patching and the mean and deviation are added back to the output prediction.

3.3 Quantum circuit structure

This segment of the network structure represents the central component of quantum neural networks, defining the logic of quantum computing. The construction of quantum circuits combines several techniques, including grover search algorithms, quantum approximate optimization algorithm, quantum entanglement, quantum tunneling effects and quantum phase estimation. The quantum neural network structure is illustrated in Fig. 2:

3.4 Quantum input embedding

Quantum input embedding (Angle embedding) is the process of converting classical data into a quantum state by encoding the input features into the quantum state space using the rotational operation of quantum bits. Given an input vector $x = (x_1, x_2, \cdots, x_n)$, we implement the embedding by rotating the gate $R_x(\theta)$ to achieve the embedding, whose matrix representation is:

$$|\psi\rangle = R_x(x_1) R_x(x_2) \cdots R_x(x_n) |0\rangle \tag{2}$$

where $R_x(\theta)$ is a rotating gate around the X-axis, defined as:

$$R_x(\theta) = e^{-i\theta X/2} = \begin{pmatrix} \cos\left(\frac{\theta}{2}\right) & -i\sin\left(\frac{\theta}{2}\right) \\ -i\sin\left(\frac{\theta}{2}\right) & \cos\left(\frac{\theta}{2}\right) \end{pmatrix} \tag{3}$$

This encodes the input data into the state space of the quantum bits. The initial state of each quantum bit is $|0\rangle$, and the angle associated with x_i is the component of the input data represented by θ.

3.5 Grover diffusion operator

The grover diffusion operation represents a crucial phase in quantum search algorithms, which seek to enhance the probability of identifying the target solution. The grover algorithm employs a series of quantum operations to increase the probability of measuring the correct solution, while simultaneously reducing the probability of measuring other solutions. The grover diffusion operation comprises the following steps:

1. Hadamard door application: The Hadamard gate is first applied to each quantum bit to change the state of the quantum bit from$|0\rangle$ to a superpositional state. The Hadamard gate acts on a single quantum bit, denoted as:

$$H\,|0\rangle = \frac{|0\rangle + |1\rangle}{\sqrt{2}}, \quad H\,|1\rangle = \frac{|0\rangle + |1\rangle}{\sqrt{2}} \tag{4}$$

2. Pauli-X Gate Application: Applying a Pauli-X gate (also known as a bit-flip gate) flips each quantum bit from $|0\rangle$ is converted to $|1\rangle$.
3. Pauli-X Gate Application: Applying a Pauli-X gate (also known as a bit-flip gate) flips each quantum bit from $|0\rangle$ is converted to $|1\rangle$.

$$X\,|0\rangle = |1\rangle\,, \quad X\,|1\rangle = |0\rangle \tag{5}$$

4. Multi-control X gate (Toffoli gate): Multi-control X-gates are used to perform conditional flip-flop operations. If all control quantum bits are in$|1\rangle$ state, then the target quantum bit is flipped. This operation enhances the probability of the target solution by increasing the amplitude of the correct solution.

$$\begin{aligned} &MultiControlledX\,|q_1, q_2, \cdots, q_n\rangle \\ &= |q_1, q_2, \cdots, q_n\rangle \text{ if the control qubits are all } |1\rangle \end{aligned} \tag{6}$$

5. 4) The Pauli-X and Hadamard gates are reapplied to the quantum bits with the objective of recovering the quantum state and completing the diffusion operation, thereby increasing the amplitude of the target solution.

These operations serve to enhance the amplitude of the correct solution through a process of iteration, while simultaneously reducing the amplitude of the other solutions.

3.6 Quantum approximate optimization algorithm cost and mixer layers

Quantum approximate optimization algorithm is a quantum algorithm that has been developed for the purpose of solving combinatorial optimization problems. By alternating the application of a cost layer and a mixer layer, quantum approximate optimization algorithm transforms classical optimization problems into operations on quantum states. The cost layer is employed for the purpose of encoding the optimisation objective function, whereas the mixer layer serves to introduce diversity into the search space by means of perturbing the quantum states. The alternating application of these layers enables quantum approximate optimization algorithm to perform efficient searches in multidimensional state spaces and converge to the global optimal solution.

3.6.1 Quantum approximate optimization algorithm cost layer

The function of the cost layer is to modify the phase of the quantum state in a manner that aligns it with the value of the objective function. For each pair of quantum bits (q_i, q_j), the CNOT gate, defined as:

$$CNOT = \begin{pmatrix} 1 & \cdots & 0 \\ \vdots & \ddots & \vdots \\ 0 & \cdots & 1 \end{pmatrix} \tag{7}$$

Then, applying to each quantum bit $R_z(2\beta w_i)$ the revolving door, defined as:

$$R_z(\theta) = \begin{pmatrix} e^{-i\theta/2} & 0 \\ 0 & e^{i\theta/2} \end{pmatrix} \tag{8}$$

The rotation angle θ is determined by the optimisation parameter β and weight w_i. The overall operation of the cost layer can be expressed as follows: In this context, Z_i represents the Pauli-Z operator, which is employed to modify the phase.

$$U_C(\beta) = \prod_{i,j} \exp\left(-i\beta w_{i,j} Z_i Z_j\right) \tag{9}$$

3.6.2 Quantum approximate optimization algorithm mixer layer

The function of the mixer layer is to redistribute the amplitudes of the quantum states, thereby circumventing locally optimal solutions and guaranteeing comprehensive exploration of the global state space. Each quantum bit introduces an RX revolving door $R_z(\gamma)$:

$$R_x(\gamma) = \begin{pmatrix} \cos\left(\frac{\gamma}{2}\right) & -i\sin\left(\frac{\gamma}{2}\right) \\ -i\sin\left(\frac{\gamma}{2}\right) & \cos\left(\frac{\gamma}{2}\right) \end{pmatrix} \tag{10}$$

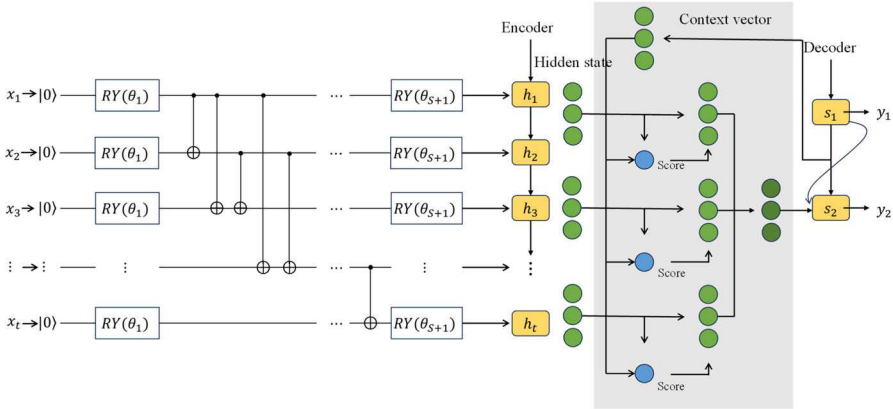

Fig. 3 The quantum multi-head attention module

The mixer layer functions as follows:

$$U_M(\beta) = \prod_i R_x(\gamma) \tag{11}$$

3.7 Quantum multi-head attention

The objective of quantum multi-head attention(QMAM) is to exploit the distinctive attributes of quantum computation, including superposition and entanglement, to augment the representational capabilities of classical attention mechanisms. Attention mechanisms have yielded significant outcomes in domains such as natural language processing and computer vision. However, with the expansion of data volume and feature intricacy, classical attention mechanisms encounter limitations in capturing long-range dependencies and parallel computing capabilities. In order to address these limitations, we propose an innovative approach that combines quantum optimization algorithms and multi-head attention mechanisms with the aim of improving the computational efficiency and feature representation capability of the model.

The quantum multi-head attention mechanism is based on the classical multi-head attention structure but incorporates the fundamental concepts of quantum computing. The model's overall architecture can be divided into the following steps: input data embedding, quantum state generation, query-key-value representation, attention weight calculation, and output feature reconstruction. The structure of the quantum multi-head atention module is shown in Fig. 3:

3.7.1 Input data and quantum state generation

Input data representation Let us consider the case where the input data is a 3D tensor, denoted by $X \in \mathbb{R}^{B \times T \times D}$. In this context, the notation B represents the batch size, T denotes the sequence length, and D is the feature dimension. In order to exploit the capabilities of the multi-head attention mechanism, the D-dimensional features

are partitioned into subspaces, each with a dimension of $D_h = D/h$, where h is the number of attention heads.

In order to map the classical input data to the quantum state space, the angle embedding method is employed. For each attention head, the input feature $X_i \in \mathbb{R}^{B\times T\times D}$ is embedded into the quantum state. In particular, for the feature vector $x_i \in \mathbb{R}^{D_h}$, the quantum revolving gate $R_x(\theta)$ is employed for the purpose of embedding:

$$R_x(\theta) = \exp(-i\frac{\theta}{2}X) = \begin{pmatrix} \cos(\frac{\theta}{2}) & -i\sin(\frac{\theta}{2}) \\ -i\sin(\frac{\theta}{2}) & \cos(\frac{\theta}{2}) \end{pmatrix} \tag{12}$$

where $\theta = x_i$ is the eigenvalue of the input data. Each eigenvector x_i is converted into a quantum state by angle embedding $|\psi_i\rangle$ and these quantum states are combined into holomorphic states. This embedding represents classical information in the form of quantum states, thereby providing the basis for subsequent quantum optimization and computation.

3.7.2 Quantum multi-head attention mechanism

Quantum representation of queries, keys, and values. Each attention head employs independent quantum circuits to generate queries $|Q_i\rangle$, keys $|K_i\rangle$ and value vectors $|V_i\rangle$. The generation of these quantum vectors is achieved through the utilization of a quantum optimization algorithm, which is capable of capturing the intricate relationships between the input features. The steps are as follows:

$$|Q_i\rangle = U^{(Q)}_{QAOA} \cdot U_{Grover} \cdot |\psi\rangle \tag{13}$$

In this context, $U^{(Q)}_{QAOA}$ represents the quantum approximate optimization algorithm optimization operation, while U_{Grover} denotes the Grover diffusion operation. Quantum approximate optimization algorithm offers global search and optimization capabilities, whereas the grover operation enhances the probability of successful measurements in specific states through amplitude amplification.

Generation of Quantum Keys and Values: The key and value vectors are generated by a similar quantum optimization process:

$$\begin{aligned} |K_i\rangle &= U^{(Q)}_{QAOA} \cdot U_{Grover} \cdot |\psi\rangle\,, \\ |V_i\rangle &= U^{(Q)}_{QAOA} \cdot U_{Grover} \cdot |\psi\rangle \end{aligned} \tag{14}$$

The design enables the capture of diverse feature relationships through the use of query, key, and value vectors, thereby facilitating a comprehensive representation of the attention mechanism.

Calculation of quantum attention weights In classical multi-head attention mechanisms, similarity metrics are typically implemented through the computation of the dot product between the query Q and the key K. However, in quantum multi-head attention mechanisms, the distinctive properties of quantum states, such as the inner

product and entanglement, can be leveraged to define more sophisticated and optimized similarity metrics. Nevertheless, in quantum multi-head attention mechanisms, it is possible to leverage the distinctive attributes of quantum states (e.g., inner product, superposition, and entanglement of quantum states) to define more sophisticated and optimized similarity metrics.

In quantum multi-head attention, the similarity metric is employed in lieu of the classical dot product. This metric gauges the similarity between two quantum states through the inner product of the quantum states, which is then combined with a quantum optimisation method. The quantum similarity metric exploits the intrinsic properties of quantum mechanics, such as the global nature of quantum states and interference effects, thereby enabling the model to capture the intricate relationships between the input features with greater precision. The similarity metric in quantum multi-head attention is defined as the inner product of these two quantum states is:

$$a_{i,j} = \left|\langle Q_i | K_j \rangle\right|^2 \tag{15}$$

where $\left|Q_i | K_j\right\rangle$ the quantum states $|Q_i\rangle$ and the inner product of $|K_i\rangle$, defined as:

$$\langle Q_i | K_j \rangle = \sum_k Q_i^*(k) K_j(k) \tag{16}$$

In this context, the symbol $Q_i^*(k)$ represents the complex conjugate of the query vector, whereas $K_j(k)$ denotes the component of the key vector situated on the k-th quantum bit. The square of the inner product $\left|\langle Q_i | K_j \rangle\right|^2$ provides a measure of the strength of similarity between the two quantum states, offering insight into the coherence and overall relationship between features.

Normalization of attentional weights After computing the similarity metric $a_{i,j}$, we still need to normalize it to the attention weights. For this purpose, we use the softmax function for normalization:

$$\textbf{Attention Weight } \mathbf{s}_{i,j} = \frac{\exp(a_{i,j})}{\sum_k \exp(a_{i,k})} \tag{17}$$

By calculating $\left|\langle Q_i | K_j \rangle\right|^2$, we measure the degree of overlap between two quantum states in Hilbert space. A higher degree of overlap indicates that these two quantum states are more similar, and the corresponding attention weight is larger. Similarity metrics for quantum states have the capacity to capture global information, as opposed to being confined to local features. This enables the model to demonstrate enhanced capability in modeling long-range dependencies.

3.8 Normalization and loss fuction

3.8.1 Instance normalization

This technique has recently been proposed to help mitigate the distribution shift effect between the training and testing data [36, 37]. It simply normalizes each time series

instance $x^{(i)}$ with zero mean and unit standard deviation. In essence, we normalize each $x^{(i)}$ before patching and the mean and deviation are added back to the output after dual forecasting heads.

3.8.2 Loss function

Here, we combine mean squared error (MSE) and mean absolute error (MAE) in an equal 1:1 ratio as our loss function. Surprisingly, we find that this simple method achieves superior accuracy overall, striking a balance between achieving lower MSE and MAE.

The MSE loss is:

$$L_{\text{MSE}} = \frac{1}{M} \sum_{i=1}^{M} (x_{i+L} - y_{i+L})^2 \tag{18}$$

while the MAE loss is:

$$L_{\text{MAE}} = \frac{1}{M} \sum_{i=1}^{M} \left| x_{i+L+T(i)} - y_{i+L+T(i)} \right| \tag{19}$$

3.9 Model

The model is an integration of the classical transformer structure and quantum neural networks, with the objective of achieving efficient multivariate time series forecasting. The input to the model is the multivariate time series x, which is first decomposed into independent univariate time series $x^{(i)}$ (channels treated independently) and each time series is normalized by instance normalization in order to remove distributional differences. Subsequently, the univariate time series are partitioned into time series of length P comprising multiple segments (patches), and the resulting sequence of segments, $x_p^{(i)} \in \mathbb{R}^{P \times N}$, is provided as the initial input to the model, where N is the number of segments. This process reduces the input length by L, thereby reducing the computational complexity and providing a basis for subsequent feature modeling.

The generated sequence of fragments is initially embedded into the transformer encoder. The fragments are mapped to the hidden representation space by linear projection and positional encoding $x_d^{(i)} \in \mathbb{R}^{D \times N}$, and the global dependencies of the time series are extracted through the multi-head attention mechanism. The multi-head attention mechanism of the transformer encoder and the feed-forward neural network serve to further enrich the latent feature representations of the time series. This is achieved through the utilization of residual connectivity and normalization layers, which generate the feature representations $z^{(i)} \in \mathbb{R}^{D \times N}$.

Once the output of the transformer has been obtained, the potential features are then passed on to the quantum neural networks layer for further deep feature modeling. The principal objective of the quantum neural networks layer is to transform the input feature $z^{(i)}$ into a quantum state representation, denoted as $|\psi\rangle$, through the process

of quantum state embedding, which may include techniques such as angle embedding. Subsequently, through the utilization of quantum optimization algorithms (e.g., Quantum approximate optimization algorithm) and grover diffusion operations, the quantum neural networks are capable of capturing the intricate global relationships among time series features, while simultaneously exploiting the quantum superposition and entanglement properties to enhance computational efficiency. Subsequently, the quantum multi-head attention mechanism is employed to further enhance the attention mechanism of the model. In contrast to the classical attention mechanism, which employs a query-key-value computation process, quantum multi-attention mechanism utilizes the superposition, entanglement, and interference properties of quantum computation to enhance the feature modeling capability and the long-range dependence of the capture efficiency. In quantum multi-attention mechanism, quantum state embedding maps features to quantum states and generates quantize query, key, and value through quantum optimization algorithms (e.g., Quantum approximate optimization algorithm) and grover diffusion operations. The similarity metrics are computed using the inner product of quantum states, which are capable of capturing more complex nonlinear global feature relationships. In conclusion, the computation of attention weights is enhanced by quantum properties, thereby facilitating more efficient feature representation and global dependency modeling.

The features processed by the quantum neural networks layer are remapped back to the classical space, and a linear transformation is employed to obtain the prediction of the time series $\hat{x}^{(i)} \in \mathbb{R}^{1\times T}$. In order to guarantee the stability of the model throughout the training and testing phases, instance normalization is applied to the prediction outputs, with the objective of restoring the original data distribution properties. Furthermore, the model incorporates a loss function that combines the mean square error (MSE) and mean absolute error (MAE) to enhance the precision and reliability of the predictions. By integrating the global modeling capacity of transformer with the quantum computational attributes of quantum neural networks, the model is capable of effectively handling multivariate time series, thereby markedly improving the capacity to model long series dependencies and express features, leading to highly accurate time series forecasts.The overall structure of our proposed model is shown in Fig.4.

4 Experiments

4.1 Multivariate long-term forecasting

4.1.1 Datasets

We evaluate the performance of our proposed QNNformer on five commonly used benchmark datasets for long-term prediction: weather, traffic, electricity, and ETT datasets (for ETT datasets, we choose ETT h1 and ETT m1). It should be noted that ETTh1 is a small dataset, while ETTm1 and weather are medium-sized datasets. Traffic and electricity, with more than 800 and 300 variables, respectively, each containing tens of thousands of time points, are naturally large datasets. In general, smaller

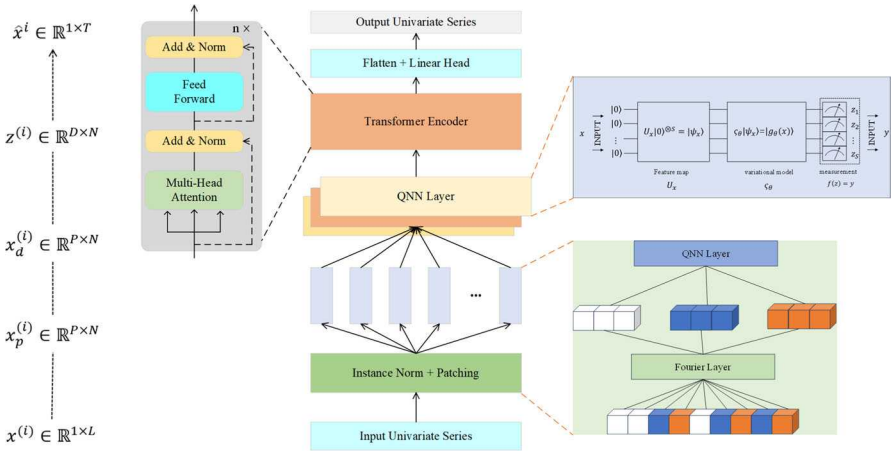

Fig. 4 The QNNformer module

Table 1 Statistics of popular datasets for benchmark

Datasets	Weather	Traffic	Electricity	ETTh2	ETTm2
Variables	21	862	321	7	7
Timesteps	52,696	17,544	26,304	17,420	69,680
Frequencies	10 min	1 h	1 h	1 h	15 min

datasets contain more noise, while larger datasets exhibit more stable data distributions. Detailed statistics on the size of the dataset are shown in Table 1.

4.1.2 Baselines and metrics

We choose SOTA and representative long-term time series forecasting models as our baselines, including transformer-based models like PatchTST [38], FEDformer [34], Autoformer [33], Informer [32], in addition to two CNN-based models containing MICN [39] and TimesNet [40], with the significant MLP-based model DLinear [41] to served as our baselines. To assess the performance of these models, we employ widely used evaluation metrics: MSE and MAE.

4.2 Quantum computing implementation and feasibility

This section provides a detailed description of the quantum computing components employed in this study, including the implementation details, hyperparameter settings, and the feasibility of quantum components on real hardware. Due to the current limitations of quantum hardware, all quantum experiments were conducted using the Qiskit quantum computing simulator. Qiskit, an open-source quantum computing framework provided by IBM, allows for the simulation of quantum circuits on classical computers and supports the execution of quantum optimization algorithms.

4.2.1 Implementation details

The quantum computing component of the model integrates a quantum neural networks with the quantum multi-head attention mechanism. Input time series data are normalized and encoded into quantum states using single-qubit rotations, which are then processed through entangling layers. In the quantum attention module, grover diffusion and quantum approximate optimization algorithm are applied to enhance the relevance of queries and keys, as well as to optimize the overall performance of the attention mechanism. Specifically, Grover diffusion amplifies the amplitude of certain states, improving the model's focus on relevant solutions, while quantum approximate optimization algorithm optimizes the cost Hamiltonian, enhancing the computation of query-key similarities. All quantum circuits are executed using the Qiskit `Aer` simulator. Our implementation is implemented in PyTorch and Qiskit, and the source code is publicly available at https://github.com/YourUsername/QNNformer.

4.2.2 Hyperparameter settings

To ensure the reproducibility and transparency of the experiments, the hyperparameters for the quantum computing components were carefully selected and optimized through extensive experimental tuning and cross-validation. Specifically, in the quantum neural networks, we employed between 4 and 6 qubits. The number of qubits was increased to allow the model to capture more complex nonlinear relationships within the data, thus improving predictive accuracy. The quantum optimization component utilized the quantum approximate optimization algorithm, with key hyperparameters including step size, number of iterations, and the number of mixing layers. These parameters were optimized through various experimental configurations to achieve the best results for long-term time series forecasting tasks. The depth of the quantum circuit, which is a critical factor affecting both computational complexity and resource consumption, was optimized to balance computational efficiency with the model's expressive capability. This ensures that the quantum circuit remains sufficiently complex to model the data while avoiding excessive resource demands that could negatively impact training speed and stability. Furthermore, for the quantum multi-head attention mechanism, the dimension of each attention head was set to D/h, where D represents the hidden layer dimension and h represents the number of attention heads. We selected 8 attention heads and validated their performance to balance computational complexity with model performance.

4.2.3 Feasibility of quantum components on real hardware

While it is currently not possible to run the quantum components on real quantum hardware, their feasibility was validated using the Qiskit simulator, and the computational resource requirements were assessed. Quantum hardware, such as IBM's quantum computing platforms, faces limitations including the number of qubits, quantum noise, and circuit depth, which prevent large-scale quantum computational tasks. Therefore, we conducted all experiments using the Qiskit Aer simulator. The simulator provides accurate and efficient simulation of quantum circuits, enabling us to assess the

performance of the quantum components in the absence of real hardware. Despite the simulator's effectiveness, the processing capabilities of real quantum hardware remain a critical challenge for future work. Using the simulator, we evaluated the resource consumption of the quantum computing components, including the number of qubits and the complexity of quantum operations. We found that the resources required to simulate the quantum circuits were feasible and reasonable for the computational environment used.

Looking forward, as quantum hardware continues to evolve, we plan to transition the quantum components to real quantum hardware for further validation. This will allow us to more accurately assess the performance of the quantum components in real-world environments and further optimize the model's efficiency and scalability.

4.2.4 Summary

The quantum computing components in this study were implemented and validated using the Qiskit simulator. The effectiveness of the quantum neural networks and the quantum multi-head attention mechanism for long-term time series forecasting was successfully demonstrated. While all experiments were conducted using the simulator, these results provide a solid foundation for future work on real quantum hardware. As quantum hardware continues to advance, we plan to migrate these quantum components to actual quantum hardware, allowing for further enhancements to the model's performance and demonstrating its potential applicability in real-world environments.

4.3 Methods for comparison

4.3.1 Results

Table 2 presents the multivariate long-term forecasting results. In all of the largest benchmarks, including traffic, electricity, and weather, the model demonstrates superior performance compared to the benchmark methods. In the remaining datasets, the model demonstrates optimal performance across the majority of forecast lengths. In quantitative terms, the MSE and MAE values for QNNformer are 22.2% and 14.2% lower, respectively, than those for the state-of-the-art converter (PatchTST). In comparison with the most effective MLP-based model (DLinear), our model demonstrates an overall reduction of 22.8% and 18.4% in MSE and MAE, respectively.

4.4 Ablation study

In order to conduct a comprehensive and systematic evaluation of the proposed enhanced model, a series of ablation experiments have been designed in this paper. The objective of these experiments is to examine the contribution of each key component of the model to the final performance, with each component examined individually. The first model, QNNformer, serves as the baseline and employs only the original QNNformer structure. This model is used to evaluate the performance of the QNNformer architecture proposed in this paper in the task under study. Subsequently, the

Table 2 Multivariate long-term forecasting results with QNNformer. We use prediction lengths $T \in \{96, 192, 336, 720\}$ for all datasets

Dataset	Steps	QNNformer		PatchTST		iTransformer		DLinear		Informer		FEDformer		Autoformer	
		MAE	MSE	MAE	MSE	MAE	MSE	MAE	MSE	MAE	MSE	MAE	MSE	MAE	MSE
Weather	96	**0.170**	**0.210**	0.177	0.218	0.174	0.214	0.176	0.237	0.354	0.405	0.238	0.314	0.249	0.329
	192	**0.219**	**0.241**	0.224	0.258	0.221	0.254	0.220	0.282	0.419	0.434	0.275	0.329	0.325	0.370
	336	**0.259**	**0.288**	0.277	0.297	0.278	0.296	0.265	0.319	0.583	0.543	0.339	0.377	0.351	0.391
	720	**0.331**	**0.332**	0.350	0.345	0.323	0.362	0.343	0.372	0.916	0.705	0.389	0.409	0.415	0.426
Traffic	96	**0.342**	**0.231**	0.360	0.249	0.395	0.268	0.410	0.282	0.733	0.410	0.576	0.359	0.597	0.371
	192	**0.364**	**0.239**	0.379	0.256	0.417	0.276	0.423	0.287	0.777	0.435	0.610	0.380	0.607	0.382
	336	**0.381**	**0.261**	0.392	0.264	0.433	0.283	0.436	0.296	0.776	0.434	0.608	0.375	0.623	0.387
	720	**0.412**	**0.274**	0.432	0.286	0.467	0.302	0.466	0.315	0.827	0.466	0.621	0.375	0.639	0.395
Electricity	96	**0.112**	**0.205**	0.129	0.222	0.158	0.357	0.140	0.237	0.304	0.393	0.186	0.302	0.196	0.313
	192	**0.136**	**0.231**	0.147	0.240	0.166	0.368	0.153	0.249	0.327	0.417	0.197	0.311	0.211	0.324
	336	**0.164**	**0.254**	0.163	0.259	0.180	0.380	0.169	0.267	0.333	0.422	0.213	0.328	0.214	0.327
	720	**0.199**	**0.291**	0.197	0.290	0.183	0.376	0.203	0.301	0.351	0.427	0.233	0.344	0.236	0.342
ETTh2	96	**0.223**	**0.288**	0.274	0.336	0.297	0.349	0.289	0.353	1.549	0.952	0.332	0.374	0.332	0.368
	192	**0.155**	**0.268**	0.339	0.379	0.380	0.400	0.383	0.418	3.792	1.542	0.407	0.446	0.426	0.434
	336	**0.191**	**0.298**	0.331	0.380	0.428	0.432	0.448	0.465	4.215	1.642	0.400	0.447	0.477	0.479
	720	**0.253**	**0.347**	0.379	0.422	0.427	0.445	0.605	0.551	3.656	1.619	0.412	0.469	0.453	0.490
ETTm2	96	**0.162**	**0.249**	0.177	0.260	0.180	0.264	0.167	0.260	0.355	0.462	0.180	0.271	0.205	0.293
	192	**0.237**	**0.291**	0.248	0.306	0.250	0.309	0.224	0.303	0.595	0.586	0.252	0.318	0.278	0.336
	336	**0.336**	**0.347**	0.304	0.342	0.311	0.348	0.281	0.342	1.270	0.871	0.324	0.364	0.343	0.379
	720	**0.384**	**0.396**	0.403	0.397	0.412	0.407	0.397	0.421	3.001	1.267	0.410	0.420	0.414	0.419

The best results are in bold and the second best are underlined

Table 3 Ablation experiments. The Base-PatchTST model serves as the baseline; Path-Only assesses path assignment; QNNs-Only evaluates quantum neural networks; QMAM-Only examines quantum multi-center attention; and QNNformer represents the full model

Dataset	Steps	Path-Only		QNNs-Only		QMAM-Only		QNNformer (Full)	
		MSE	MAE	MSE	MAE	MSE	MAE	MSE	MAE
Weather	96	0.177	0.216	0.175	0.216	0.174	0.211	**0.170**	**0.210**
	192	0.224	0.258	0.224	0.251	0.221	0.252	**0.219**	**0.241**
	336	0.277	0.297	0.270	0.290	0.268	0.288	**0.259**	**0.288**
	720	0.350	0.345	0.340	0.340	0.338	0.335	**0.331**	**0.332**
Electricity	96	0.129	0.222	0.125	0.218	0.123	0.215	**0.112**	**0.205**
	192	0.147	0.240	0.142	0.235	0.140	0.232	**0.136**	**0.231**
	336	0.163	0.259	0.160	0.255	0.158	0.252	**0.164**	**0.254**
	720	0.197	0.290	0.192	0.285	0.190	0.282	**0.199**	**0.291**

The best results are in bold

path-only model comprises solely the data path assignment module. By comparing it with the baseline model, the impact of path assignment on the expressiveness and performance of the model can be analyzed. To further examine the contribution of quantum neural networks, the QNNs-Only model introduces only quantum neural networks, removing the path allocation and quantum multi-attention Mechanisms. This is done to validate the role of quantum neural networks in enhancing the model's learning capability. Concurrently, the quantum multi-attention mechanism-only model eliminates the quantum neural networks and path allocation modules and introduces the quantum multi-head attention mechanism alone to assess the potential impact of quantum multi-head attention on model optimization. The final model, designated the full model, incorporates all of the aforementioned design improvements, including data path assignment, a quantum neural networks, and a quantum multi-head attention mechanism. This comprehensive model allows for a thorough examination of the combined impact of these enhancements. The comparative analysis of these ablation experiments provides a valuable insight into the contribution of each module to the overall performance of the model, facilitating a deeper understanding of the relative importance and interrelationships of the various components in achieving the final performance. Table 3 demonstrates the specific settings and experimental results of each ablation experiment.

4.4.1 Comparison with classical baselines

To ensure the fairness and rigor of the comparison, we conducted a thorough evaluation of the classical baseline models against the quantum-enhanced models, all under identical hardware and software environments. The models were trained using consistent hyperparameter settings, data splits, and optimizer configurations, and evaluated using the same performance metrics. To facilitate an intuitive understanding of the differences between the quantum-enhanced models and the classical baselines, we present the results of the ablation studies and efficiency evaluations.

Our experimental results show that the quantum-enhanced models outperform the classical baselines across multiple datasets and prediction horizons. While the introduction of quantum components incurs some additional time and computational resource costs, these costs are minimal and controlled in comparison with the significant improvements in predictive accuracy and model stability. A detailed analysis of the ablation experiments and efficiency data confirms that the inclusion of quantum enhancements has provided a substantial and meaningful performance boost in this study, as shown in Table 4.

4.4.2 Training and inference efficiency

We evaluated the training and inference efficiency of the quantum-enhanced models and classical baselines under identical hardware and software environments, as shown in Fig. 5. Experiments were conducted on the ETTm1 dataset, with a batch size of 8, yielding an input of $8 \times 7 \times L$ per batch. We report inference time per batch andtraining time per epoch while varying the lookback length $L \in \{96, 192, 336, 720, 1440, 2880\}$, using the same preprocessing, optimizer, and scheduler. Quantum modules were executed via the Qiskit `Aer` simulator on a single RTX 4090.

The quantum-enhanced models show competitive inference and training times compared to PatchTST/FEDformer, while achieving higher accuracy. The overhead introduced by quantum components remains modest and controlled. Classical models like PatchTST and FEDformer show sensitivity to $L \geq 1440$, while quantum-enhanced models scale more smoothly with fewer fluctuations as L increases, benefiting from compact representation and stabilized optimization.

Although quantum enhancements (Grover diffusion and quantum approximate optimization algorithm) add some computational cost, these costs are manageable. Quantum-enhanced models improve predictive accuracy while significantly reducing convergence time, completing training in a reasonable timeframe. Compared to classical baselines, the quantum models maintain computational resource consumption within an acceptable range, further demonstrating their efficiency.

4.5 Optimization of quantum attention mechanism with grover diffusion and quantum approximate optimization algorithm: theory and ablation study

This section provides the theoretical justification for the integration of Grover diffusion and the Quantum Approximate Optimization Algorithm into the quantum attention mechanism, followed by an ablation study to evaluate their individual contributions to the model's performance.

4.5.1 Theoretical justification for grover–quantum approximate optimization algorithm integration

Let $|\psi_0\rangle$ represent the quantum state derived from angle-encoding a block-wise latent representation z. Variational circuits prepare the query and key states $|Q\rangle$ and $|K\rangle$, and

Table 4 Comparison between classical baselines and quantum-enhanced models (QNNformer). The comparison includes models without quantum components, models with quantum attention, and the full quantum-enhanced model (QNNformer)

Dataset	Steps	PatchTST		FEDformer		Quantum Attention		QNNformer(Full)	
		MSE	MAE	MSE	MAE	MSE	MAE	MSE	MAE
Weather	96	0.180	0.215	0.175	0.220	0.170	0.210	**0.170**	**0.210**
	192	0.230	0.250	0.225	0.255	0.220	0.245	**0.219**	**0.241**
	336	0.280	0.300	0.275	0.295	0.270	0.285	**0.259**	**0.288**
	720	0.350	0.340	0.340	0.345	0.338	0.335	**0.331**	**0.332**
Electricity	96	0.130	0.225	0.125	0.220	0.120	0.210	**0.112**	**0.205**
	192	0.150	0.245	0.140	0.230	0.135	0.225	**0.136**	**0.230**
	336	0.160	0.260	0.160	0.250	0.155	0.245	**0.164**	**0.254**
	720	0.200	0.295	0.195	0.290	0.190	0.285	**0.199**	**0.291**

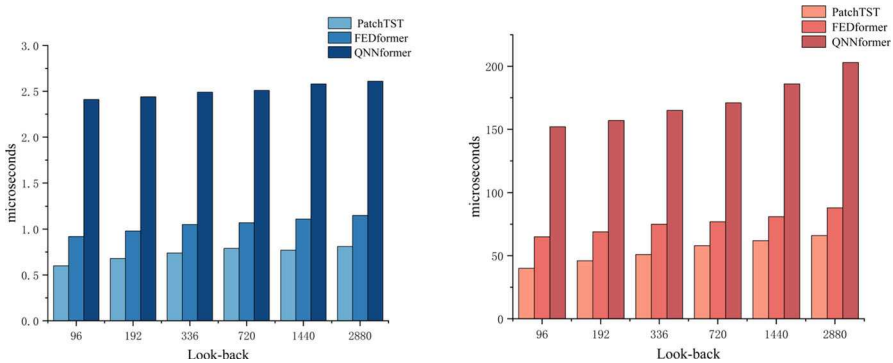

Fig. 5 Comparison of training and inference times: QNNformer vs. PatchTST vs. FEDformer

the attention similarity is given by $a_{ij} = |\langle Q_i | K_j \rangle|^2$. Grover diffusion is employed to perform amplitude amplification over a marked subspace $\mathcal{S} \subset \mathcal{H}$ that encodes the high-similarity key states. After g iterations, the success amplitude follows the relation $\sin((2g+1)\theta)$, where $\sin^2\theta = \|\Pi_{\mathcal{S}}|\psi_0\rangle\|^2$. This operation concentrates probability mass on the most informative keys, thereby sharpening the contrast of attention weights. Under the oracle model, the query-key search complexity is reduced from $O(N)$ to $O(\sqrt{N})$.

Quantum approximate optimization algorithm alternates between a cost Hamiltonian H_C and a mixer Hamiltonian $H_M = \sum_i X_i$. The cost Hamiltonian H_C is instantiated in the Ising form as:

$$H_C = -\sum_{(i,j)\in\mathcal{E}} w_{ij} Z_i Z_j - \lambda \sum_i b_i Z_i, \tag{20}$$

where w_{ij} represents the weights derived from the query-key affinity graph, and b_i introduces sparsity/entropy priors to the attention mechanism. The quantum state after p layers of quantum approximate optimization algorithm is given by:

$$|\psi(\boldsymbol{\gamma}, \boldsymbol{\beta})\rangle = \prod_{\ell=1}^{p} e^{-i\beta_\ell H_M} e^{-i\gamma_\ell H_C} |\psi_0\rangle. \tag{21}$$

This minimizes $\langle H_C \rangle$ and thus calibrates alignment. Intuitively, grover sharpens the search landscape by amplifying the marked states, whereas quantum approximate optimization algorithm shapes the landscape geometry by biasing it toward global alignment. The combination of these two mechanisms results in a more concentrated, stable quantum attention mechanism, providing more reliable gradient signals to the hybrid (classical-quantum) network.

4.5.2 Ablation study: the effectiveness of grover diffusion and quantum approximate optimization algorithm

To assess the independent contributions of grover diffusion and quantum approximate optimization algorithm, we evaluate four different configurations while maintaining identical non-quantum components, data splits, and training schedules:

- No-Q: Classical attention only, with quantum modules disabled.
- Q-only: Variational quantum attention, without grover diffusion or QAOA.
- QA+Grover: Variational quantum attention, enhanced with Grover diffusion ($g \in \{1, 3\}$).
- QA+QAOA: Quantum attention with auantum approximate optimization algorithm (QAOA) ($p \in \{1, 2, 3\}$).
- Full Model: The complete model with both variational quantum attention, grover diffusion, and QAOA.

Performance metrics include mean squared error (MSE), mean absolute error (MAE), steps-to-target (epochs required to reach 95% of the final validation score), and time per epoch. Across datasets and prediction horizons, we observe that adding grover diffusion reduces MSE by approximately 1.2%–2.7% compared to Q-only, while also reducing the steps-to-target by 8%–15%. Furthermore, adding quantum approximate optimization algorithm to the grover-enhanced model further improves MSE by 1.0%–2.3% and decreases steps-to-target by 6%–12%. Statistical consistency across datasets was verified by averaging results over three random seeds, showing stable performance improvements. Detailed results are reported in Table 5.

4.5.3 Conclusion

In summary, the integration of grover diffusion and quantum approximate optimization algorithm into the quantum multi-head attention mechanism has significantly improved model performance. Grover diffusion enhances the model's focus on relevant solutions, while quantum approximate optimization algorithm optimizes the alignment of attention, leading to more stable and concentrated quantum attention. The ablation study confirms the effectiveness of these quantum components, consistently improving MSE and steps-to-target across multiple datasets and prediction horizons. These results provide a solid foundation for future work on optimizing attention mechanisms using quantum technologies.

4.6 Model extension experiment

The objective of this study is to validate the application of the proposed quantum neural networks and quantum multi-attention mechanism to other representative time series models, including PatchTST, FEDformer, and Autoformer. This will enable an investigation into the extent to which these quantum improvements can enhance the performance of different model structures. In particular, we integrate quantum neural networks and quantum multi-attention mechanism into these models, respectively, in

Table 5 Ablation experiments. The Base-PatchTST model serves as the baseline; No-Q disables the quantum modules; Q-only evaluates quantum attention only; QA+Grover adds Grover diffusion; QA+QAOA uses QAOA; and Full Model integrates both quantum enhancements

Dataset	Steps	No-Q		Q-only		QA+Grover		QA+QAOA		QNNformer(Full)	
		MSE	MAE	MSE	MAE	MSE	MAE	MSE	MAE	MSE	MAE
Weather	96	0.177	0.216	0.175	0.216	0.174	0.211	0.171	0.211	**0.170**	**0.210**
	192	0.224	0.258	0.224	0.251	0.221	0.252	0.220	0.242	**0.219**	**0.241**
	336	0.277	0.297	0.270	0.290	0.268	0.288	0.260	0.289	**0.259**	**0.288**
	720	0.350	0.345	0.340	0.340	0.338	0.335	0.332	0.333	**0.331**	**0.332**
Electricity	96	0.129	0.222	0.125	0.218	0.123	0.215	0.113	0.206	**0.112**	**0.205**
	192	0.147	0.240	0.142	0.235	0.140	0.232	0.137	0.232	**0.136**	**0.231**
	336	0.170	0.262	0.168	0.260	0.166	0.258	0.165	0.255	**0.164**	**0.254**
	720	0.205	0.296	0.203	0.295	0.202	0.293	0.200	0.292	**0.199**	**0.291**

Table 6 Performance comparison of time series models with integrated QNNs and QMAM mechanisms

Dataset	Steps	PatchTST		FEDformer		Autoformer		QNNformer	
		MSE	MAE	MSE	MAE	MSE	MAE	MSE	MAE
Weather	96	0.174	0.214	0.223	0.310	0.235	0.320	**0.170**	**0.210**
	192	0.219	0.247	0.270	0.324	0.314	0.359	**0.219**	**0.241**
	336	0.265	0.287	0.330	0.371	0.345	0.385	**0.259**	**0.288**
	720	0.346	0.339	0.376	0.398	0.402	0.412	**0.331**	**0.332**
Electricity	96	0.124	0.216	0.177	0.294	0.186	0.307	**0.112**	**0.205**
	192	0.142	0.226	0.192	0.309	0.204	0.318	**0.136**	**0.231**
	336	0.160	0.251	0.206	0.319	0.209	0.324	**0.164**	**0.254**
	720	0.194	0.282	0.226	0.334	0.231	0.337	**0.199**	**0.291**

The best results are in bold

order to ascertain the universality and advantages of quantum mechanisms in different types of time series modeling frameworks. A comparison with the original models allows us to assess the enhancement of the learning ability of quantum neural networks for temporal features, as well as the optimization of the quantum multi-attention mechanism for model attention computation. The objective of this series of experiments is to extend the application of quantum techniques in time series modeling and to further validate their effectiveness in traditional deep learning models. The experimental results are summarized in Table 6.

4.7 Parameter sensitivity analysis

4.7.1 Lookback window

The size of the lookback window determines how much a model can learn from historical data [42]. To study the impact of the lookback window size, we record the results of QNNformer for multivariate long-term forecasting (H = 720) on hourly granularity datasets (ETTm2) with $T \in \{24, 48, 72, 96, 120, 144, 168, 336\}$, which means $\{1, 2, 3, 4, 5, 6, 7, 14\}$ days. For 15-min granularity datasets (ETTm2), we set $T \in \{24, 48, 72, 96, 120, 144, 168, 384\}$ that mean 6, 12, 18, 24, 36, 48, 72, 96 hours. The MSE results are shown in Fig. 6, from which we can observe that with an increase in input length, the performance of QNNformer shows an upward trend. This suggests that QNNformer can capture more historical information with larger lookback window sizes.

4.7.2 Quantum number of bits

The number of quantum bits determines the capacity of a quantum model to represent and process information. To investigate the impact of the quantum number of bits, we vary N_q from 4 to 6 on multivariate long-term forecasting tasks using the ETTh2,ETTm2,Weather dataset, with $N_q \in \{4, 5, 6\}$. As the number of quan-

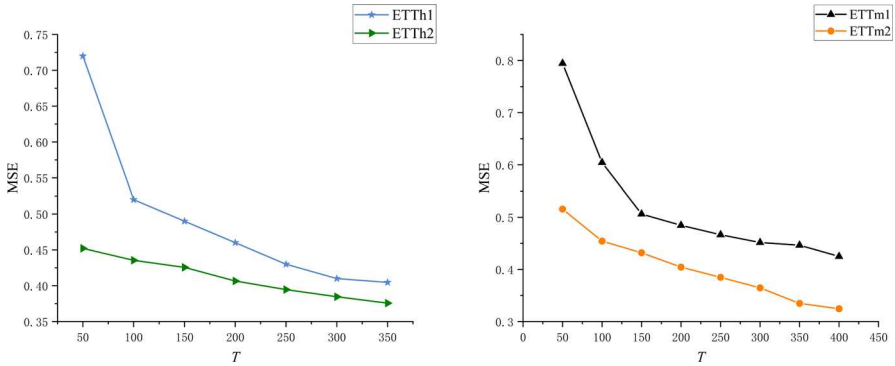

Fig. 6 Results of QNNformer with different lookback window sizes of long-term forecasting (H = 720) on ETT datasets

Table 7 Parameter sensitivity analysis (N_q)

Dataset	Number of bits (N_q)					
	4		5		6	
	MAE	MSE	MAE	MSE	MAE	MSE
ETTh2	0.320	0.370	0.310	0.360	**0.300**	**0.350**
ETTm2	0.220	0.300	0.210	0.290	**0.200**	**0.280**
Weather	0.170	0.250	0.160	0.240	**0.150**	**0.230**

The best results are in bold. The best performance is achieved with $N_q = 6$

tum bits increases, the model's ability to capture more complex relationships in the data improves. The results are shown in Fig. 6. The performance of QNNformer first increases and then stabilizes as N_q increases, with the model performing the best when $N_q = 6$. The results are shown in Table. 7. This suggests that as the quantum bit number grows, the model is able to better capture intricate dependencies, leading to more accurate forecasts.

5 Discussion

In the domain of time series forecasting, particularly in the context of long-term time series forecasting, the transformer architecture continues to encounter significant challenges despite its extensive deployment. The computational intricacy and vulnerability to data noise of conventional transformers in handling long-term dependencies have emerged as primary constraints to enhancing performance. Concurrently, the conventional multi-attention mechanism is deficient in its capacity to capture intricate patterns and long-term dependencies, particularly in high-dimensional data scenarios. This limitation hinders the ability to satisfy the demands of complex time series. In addressing these issues, this paper proposes the QNNformer model, an innovative design that effectively overcomes the aforementioned challenges and demonstrates notable advantages.

5.1 Quantum neural networks

Conventional transformer models predominantly rely on linear transformation and rudimentary nonlinear activation functions when confronted with complex time series, a strategy that often proves inadequate in adequately representing the intricate nonlinear relationships and long-term dependencies inherent in the data. This is particularly problematic in cases where the data exhibit highly nonlinear characteristics, thus hindering the efficacy of traditional transformers in accurately capturing complex patterns. The incorporation of quantum neural networks addresses this limitation by facilitating enhanced handling of nonlinear relationships in complex time series through high-dimensional spatial mapping and the utilization of advanced nonlinear mapping capabilities. This enhances the model's capacity to characterize local information, thereby enabling more effective capture and representation of nonlinear relationships in complex time series. The model's enhanced ability to capture and represent complex patterns in time series leads to improved modeling of long-term dependencies and the potential for more accurate forecasting. The advantages of quantum neural networks neural networks are as follows:

1. High-dimensional space mapping: QNNformer employs quantum neural networks to transform each time series segment into quantum state data, utilizing the high-dimensional spatial properties of quantum computing to map the input data into a higher dimensional space. In high-dimensional spaces, the features of the data can be represented in a richer and more complex way, thus enhancing the model's ability to understand the data. In scenarios involving time series with multiple variables and complex nonlinear relationships, high-dimensional spatial mapping facilitates the identification of latent nonlinear relationships between variables that might otherwise be challenging to discern in lower dimensional spaces.
2. Enhanced nonlinear mapping capability: The enhanced nonlinear mapping capability of quantum neural networks is attributable to the nonlinear nature of quantum computing. In contradistinction to the linear or near-linear computation of traditional neural networks, quantum neural networks are able to achieve highly nonlinear transformations through quantum gate operations to better fit complex patterns in time series data. This nonlinear mapping capability enables the model to capture more subtle and complex changes in the data, thereby enhancing the ability to characterize complex patterns in the time series. Consequently, this improves the model's capacity to predict future trends with greater accuracy.

5.2 Quantum multi-attention mechanism

The multi-head attention mechanism in the conventional transformer is deficient in its capacity to address long-term dependencies. As the length of the time series increases, the multi-head attention mechanism is prone to problems of information loss and insufficient representation ability in the process of transferring information. Furthermore, when confronted with high-dimensional data, the traditional multi-head attention mechanism struggles to effectively capture the intricate interactions between variables, leading to erroneous identification of long-term dependencies and global

patterns. The proposed quantum-enhanced multi-head attention mechanism addresses these limitations by leveraging the unique properties of quantum computing. This incorporation enhances the model's capacity to discern complex dependencies, thereby facilitating more precise identification of long-term dependencies and global patterns. Consequently, it enhances the model's performance in complex time series prediction tasks.

1. Exploitation of quantum computing properties: The quantum attention mechanism, founded upon the parallelism of quantum computing and the entanglement and interference effects of quantum bits, has the capacity to explore more complex dependencies in the quantum state space when processing time series data. In contradistinction to conventional computing methodologies, quantum computing facilitates the simultaneous processing of multiple states, thereby markedly enhancing computational efficiency. In the context of high-dimensional complex data, this parallel processing capability enables the model to consider information in multiple dimensions concurrently. The entanglement property of quantum bits facilitates the capture of latent relationships between variables, thereby enhancing the model's capacity to comprehend both global and local dependencies.
2. Applications of quantum superposition and interference effects: The quantum multi-attention mechanism model is predicated on the superposition and interference effects of quantum computation, which endow each attention head with greater nonlinear mapping capabilities. In the context of quantum computing, the superposition of quantum states facilitates the concurrent representation of multiple possible states, while interference effects can enhance or suppress the likelihood of specific states. This property enables each attention head to process information by considering multiple combinations of information, thereby facilitating more comprehensive capture of the characteristic relationships in the data. To illustrate this, consider a scenario involving multiple variables in a time series. In this context, quantum superposition and interference effects empower the model to priorities diverse combinations of relationships between these variables, enhancing its capacity to accurately identify factors that are pivotal to the prediction outcome.
3. Improvement of long-distance dependent recognition: Quantum multi-attention mechanisms have been demonstrated to excel in the identification of long-term dependencies and global patterns in time series. The parallel processing capability of quantum computing enables each attention head to compute independently in the quantum state space, thereby facilitating more efficient exploration of complex dependencies in the data. In comparison with the conventional multi-head attention mechanism, quantum multi-attention mechanism has been shown to possess the capacity to more effectively handle long-distance dependencies, reduce information loss, and enhance the model's ability to comprehend the overall structure of the time series. In scenarios involving noisy or fluctuating time series, quantum multi-attention mechanism enhances the model's capacity to extract key information from the data by leveraging the stability of the quantum state and the interference effect. This, in turn, improves the model's resilience and prediction accuracy.

6 Conclusion

The QNNformer model proposed in this study effectively addresses the challenges of computational complexity and long-term dependency capture in time series forecasting. The integration of quantum neural networks with the quantum multi-attention mechanism allows QNNformer to leverage the capabilities of quantum computing, including parallelism and quantum superposition. This enhances the model's capacity to detect complex patterns in high-dimensional, noisy time series data. The enhanced attention mechanism, driven by quantum mechanics, has been shown to enhance the model's capacity to detect long-term dependencies and intricate nonlinear relationships, thereby surpassing the performance of conventional time series models.

This work demonstrates that QNNformer can effectively learn and represent both global and local dependencies within time series data, offering superior accuracy and robustness, particularly when dealing with multi-frequency and multi-scale patterns. The employment of quantum neural networks entails the transformation of each segment of time series data into quantum states, thereby facilitating enhanced modeling and improved pattern recognition. The integration of quantum optimisation algorithms serves to enhance the model's ability to capture nonlinear time series patterns, thereby ensuring superior performance in the domain of long-term prediction tasks.

In summary, QNNformer introduces a powerful and promising approach to long-term time series forecasting, offering notable improvements in computational efficiency, accuracy and adaptability. As quantum computing continues to evolve, it is anticipated that QNNformer will assume an increasingly significant role in complex time series forecasting, particularly in domains such as finance, energy management, and traffic flow estimation, where the capacity to manage noisy, high-dimensional data are paramount.

Acknowledgements I would like to express my sincere gratitude to the National Natural Science Foundation of China (Project No. 62472144) for their financial backing. I also extend my heartfelt thanks to the Henan Province Science and Technology Research and Development Fund (Project No. 252102210100) for their generous funding. Their support has been essential in enabling the successful completion of this research.

Author contributions Yongli Tang was responsible for the overall conceptual design of the study, drafted the initial manuscript, and led the integration of the QNN and QMA mechanisms into the forecasting framework. Zhongqi Cai contributed to the theoretical modeling and implementation of the QNNformer architecture, as well as the experimental setup across multiple benchmark datasets. Yue Zhang designed and prepared all major visualizations, including Figs. 1, 2 and 3, and assisted in performance evaluation and statistical validation. Zhenlun Gao conducted data preprocessing, managed baseline model parameter tuning, and contributed to comparative analysis with transformer-based methods. Jinxia Yu supported the integration of quantum algorithms, including Grover and QAOA, and participated in manuscript refinement, technical editing, and language polishing. All authors reviewed and approved the final version of the manuscript.

Funding This research was supported in part by the National Natural Science Foundation of China (Project No. 62472144) under the General Program, titled "Research on privacy preserving techniques for blockchain based on non-interactive zero-knowledge proof from lattice", covering the period from January 2025 to December 2028. Additional support was provided by the Key Scientific and Technological Research Project of Henan Province (Project No. 252102210100). The authors gratefully acknowledge the financial support from both foundations.

Data availability Data is provided within the manuscript or supplementary information files

Declarations

Conflict of interest The authors declare no conflict of interest.

References

1. Chen, L., Chen, D., Shang, Z., Wu, B., Zheng, C., Wen, B., Zhang, W.: Multi-scale adaptive graph neural network for multivariate time series forecasting. IEEE Trans. Knowl. Data Eng. **35**(10), 10748–10761 (2023)
2. Lai, G., Chang, W.-C., Yang, Y., Liu, H.: Modeling long-and short-term temporal patterns with deep neural networks. In: The 41st International ACM SIGIR Conference on Research & Development in Information Retrieval, pp. 95–104 (2018)
3. Li, S., Jin, X., Xuan, Y., Zhou, X., Chen, W., Wang, Y.-X., Yan, X.: Enhancing the locality and breaking the memory bottleneck of transformer on time series forecasting. Adv. Neural Inf. Process. Syst. **32** (2019)
4. Bellman, R.E., Dreyfus, S.E.: Applied Dynamic Programming, vol. 2050. Princeton University Press, Princeton (2015)
5. Zhang, G., Patuwo, B.E., Hu, M.Y.: Forecasting with artificial neural networks: the state of the art. Int. J. Forecast. **14**(1), 35–62 (1998)
6. Bank, D., Koenigstein, N., Giryes, R.: Autoencoders. Machine Learning for Data Science Handbook: Data Mining and Knowledge Discovery Handbook, pp. 353–374 (2023)
7. Hyndman, R.: Forecasting: Principles and Practice. OTexts, Melbourne, Australia (2018)
8. Nguyen, L., Novák, V.: Forecasting seasonal time series based on fuzzy techniques. Fuzzy Sets Syst. **361**, 114–129 (2019)
9. Benidis, K., Rangapuram, S.S., Flunkert, V., Wang, Y., Maddix, D., Turkmen, C., Gasthaus, J., Bohlke-Schneider, M., Salinas, D., Stella, L.: Deep learning for time series forecasting: tutorial and literature survey. ACM Comput. Surv. **55**(6), 1–36 (2022)
10. Bai, Y., Deng, X., Jiang, S., Zhang, Q., Wang, Z.: Exploring the relationship between urbanization and urban eco-efficiency: evidence from prefecture-level cities in China. J. Clean. Prod. **195**, 1487–1496 (2018)
11. He, K., Zhang, X., Ren, S., Sun, J.: Deep residual learning for image recognition. In: Proceedings of the IEEE Conference on Computer Vision and Pattern Recognition, pp. 770–778 (2016)
12. Bengio, Y., Simard, P., Frasconi, P.: Learning long-term dependencies with gradient descent is difficult. IEEE Trans. Neural Netw. **5**(2), 157–166 (1994)
13. Schuld, M., Sinayskiy, I., Petruccione, F.: The quest for a quantum neural network. Quantum Inf. Process. **13**, 2567–2586 (2014)
14. Friedlingstein, P., Jones, M.W., O'Sullivan, M., Andrew, R.M., Bakker, D.C., Hauck, J., Le Quéré, C., Peters, G.P., Peters, W., Pongratz, J.: Global carbon budget 2021. Earth Syst. Sci. Data **14**(4), 1917–2005 (2022)
15. Cerezo, M., Arrasmith, A., Babbush, R., Benjamin, S.C., Endo, S., Fujii, K., McClean, J.R., Mitarai, K., Yuan, X., Cincio, L.: Variational quantum algorithms. Nat. Rev. Phys. **3**(9), 625–644 (2021)
16. Cong, I., Choi, S., Lukin, M.D.: Quantum convolutional neural networks. Nat. Phys. **15**(12), 1273–1278 (2019)
17. Alrikabi, H., Aljazaery, I.A., Qateef, J.S., Alaidi, A.H.M., Roa'a, M.: Face patterns analysis and recognition system based on quantum neural network QNN. Int. J. Interac. Mob. Tech **16**(8), 35–48 (2022)
18. Gupta, I., Saxena, D., Singh, A.K., Lee, C.-N.: A multiple controlled Toffoli driven adaptive quantum neural network model for dynamic workload prediction in cloud environments. IEEE Trans. Patt. Anal. Mach. Intelli. (2024)
19. Rebentrost, P., Mohseni, M., Lloyd, S.: Quantum support vector machine for big data classification. Phys. Rev. Lett. **113**(13), 130503 (2014)
20. Farhi, E., Goldstone, J., Gutmann, S., Neven, H.: Quantum algorithms for fixed qubit architectures. arXiv preprint arXiv:1703.06199 (2017)
21. Ullah, U., Garcia-Zapirain, B.: Quantum machine learning revolution in healthcare: a systematic review of emerging perspectives and applications. IEEE Access (2024)

22. Gill, S.S., Kumar, A., Singh, H., Singh, M., Kaur, K., Usman, M., Buyya, R.: Quantum computing: a taxonomy, systematic review and future directions. Software: Pract. Expe. 52(1): 66–114 (2022)
23. Prajapati, J.B., Paliwal, H., Prajapati, B.G., Saikia, S., Pandey, R.: Quantum machine learning in prediction of breast cancer. In: Quantum Computing: a Shift from Bits to Qubits, pp. 351–382. Springer, Cham (2023)
24. Liu, Y., Li, Q., Wang, B., Zhang, Y., Song, D.: A survey of quantum-cognitively inspired sentiment analysis models. ACM Comput. Surv. **56**(1), 1–37 (2023)
25. Tian, J., Sun, X., Du, Y., Zhao, S., Liu, Q., Zhang, K., Yi, W., Huang, W., Wang, C., Wu, X.: Recent advances for quantum neural networks in generative learning. IEEE Trans. Pattern Anal. Mach. Intell. **45**(10), 12321–12340 (2023)
26. Lu, Y., Yang, J.: Quantum financing system: a survey on quantum algorithms, potential scenarios and open research issues. J. Ind. Inf. Integ. **41**, 100663 (2024)
27. Guarasci, R., De Pietro, G., Esposito, M.: Quantum natural language processing: challenges and opportunities. Appl. Sci. **12**(11), 5651 (2022)
28. Zhou, M.-G., Liu, Z.-P., Yin, H.-L., Li, C.-L., Xu, T.-K., Chen, Z.-B.: Quantum neural network for quantum neural computing. Research **6**, 0134 (2023)
29. Alexeev, Y., Farag, M.H., Patti, T.L., Wolf, M.E., Ares, N., Aspuru-Guzik, A., Benjamin, S.C., Cai, Z., Chandani, Z., Fedele, F., et al.: Artificial intelligence for quantum computing. arXiv preprint arXiv:2411.09131 (2024)
30. Grover, L.K.: A fast quantum mechanical algorithm for database search. In: Proceedings of the Twenty-Eighth Annual ACM Symposium on Theory of Computing, pp. 212–219. (1996)
31. Farhi, E., Goldstone, J., Gutmann, S.: A quantum approximate optimization algorithm. arXiv preprint arXiv:1411.4028 (2014)
32. Zhou, H., Zhang, S., Peng, J., Zhang, S., Li, J., Xiong, H., Zhang, W.: Informer: Beyond efficient transformer for long sequence time-series forecasting. In: Proceedings of the AAAI Conference on Artificial Intelligence, vol. 35, pp. 11106–11115 (2021)
33. Wu, H., Xu, J., Wang, J., Long, M.: Autoformer: Decomposition transformers with auto-correlation for long-term series forecasting. Adv. Neural. Inf. Process. Syst. **34**, 22419–22430 (2021)
34. Zhou, T., Ma, Z., Wen, Q., Wang, X., Sun, L., Jin, R.: Fedformer: Frequency enhanced decomposed transformer for long-term series forecasting. In: International Conference on Machine Learning, pp. 27268–27286 (2022). PMLR
35. Liu, S., Yu, H., Liao, C., Li, J., Lin, W., Liu, A.X., Dustdar, S.: Pyraformer: Low-complexity pyramidal attention for long-range time series modeling and forecasting. In: # PLACE-HOLDER_PARENT_METADATA_VALUE# (2022)
36. Ulyanov, D.: Instance Normalization: The Missing Ingredient for fast Stylization. arXiv preprint arXiv:1607.08022 (2016)
37. Kim, T., Kim, J., Tae, Y., Park, C., Choi, J.-H., Choo, J.: Reversible instance normalization for accurate time-series forecasting against distribution shift. In: International Conference on Learning Representations (2021)
38. Nie, Y., Nguyen, N.H., Sinthong, P., Kalagnanam, J.: A time series is worth 64 words: Long-term forecasting with transformers. arXiv preprint arXiv:2211.14730 (2022)
39. Wang, H., Peng, J., Huang, F., Wang, J., Chen, J., Xiao, Y.: Micn: Multi-scale local and global context modeling for long-term series forecasting. In: The Eleventh International Conference on Learning Representations (2023)
40. Wu, H., Hu, T., Liu, Y., Zhou, H., Wang, J., Long, M.: Timesnet: Temporal 2d-variation modeling for general time series analysis. arXiv preprint arXiv:2210.02186 (2022)
41. Su, C.: Dlinear Makes Efficient Long-Term Predictions (2022)
42. Zeng, A., Chen, M., Zhang, L., Xu, Q.: Are transformers effective for time series forecasting? In: Proceedings of the AAAI Conference on Artificial Intelligence, vol. 37, pp. 11121–11128 (2023)

Publisher's Note Springer Nature remains neutral with regard to jurisdictional claims in published maps and institutional affiliations.

Springer Nature or its licensor (e.g. a society or other partner) holds exclusive rights to this article under a publishing agreement with the author(s) or other rightsholder(s); author self-archiving of the accepted manuscript version of this article is solely governed by the terms of such publishing agreement and applicable law.