Train-and-Scaling the Quantum Alternating Operator Ansatz to Solve Portfolio Diversification

Hannes Leipold[1, 2] and Sarvagya Upadhyay[1]

[1]Fujitsu Research of America, Santa Clara, CA, USA
[2]Corresponding author: hleipold@fujitsu.com

2024 IEEE International Conference on Quantum Computing and Engineering (QCE) | 979-8-3315-4137-8/24/$31.00 ©2024 IEEE | DOI: 10.1109/QCE60285.2024.10266

***Abstract*—Low depth quantum circuits have widely studied limitations that impact their usefulness to solve optimization problems while training high depth quantum circuits from identity or random initialization are likely to be plagued by vanishing gradients in training. We propose a method, Train-and-Scale, that finds high quality parameters at smaller problem instances and then scales the depth of the quantum circuits as the size of instances considered is scaled up concurrently with repeated retraining. We test our approach on solving the Maximum Independent Set formulation of the Portfolio Diversification problem for assets selected from the SP500 and training on families of subgraphs generated from size 6 to size 30. Our results show high average quality solutions (with an average approximation ratio below 0.4 and small sampling complexities to find the best solution) with a modest increase of p-depth as the instance sizes are scaled up (p=54 for n=30).**

I. Introduction

Variational quantum algorithms (VQAs) like Quantum Approximate Optimization Algorithm can prepare states beyond what are capable in classical computation. The quantum circuit is parameterized and the parameters are optimized through a hybrid quantum/classical framework [1]. The Quantum Approximate Optimization Algorithm, or more generally, Quantum Alternating Operator Ansatz (QAOA) [2] approaches are promising for finding potential quantum advantage on optimization problems over classical algorithms.

However, QAOA, like VQAs in general, are unable to achieve better solution quality to optimization problems for low depth [3]. As such, it is imperative to find higher depth quantum circuits for solving classical tasks. At higher depth, VQAs without highly restricted Lie Algebras are characterized by the phenomenon of Barren Plateaus, where the variance of the gradient in the optimization of the circuit parameters vanish. As such, reliable methods for learning good parameters for intermediate or larger depth circuits has become an important task for utilizing variational quantum algorithms.

In this manuscript, we describe a simple approach for scaling up the depth of the quantum circuit iteratively while simultaneously scaling up the size of instances being solved by the QAOA (or more generally VQA) algorithm. Intuitively, if a selection of parameters are high quality for solving instances of a problem for a specified size n, then these parameters are good quality candidates for warm starting the system on problems of size $n+1$. We then increase the p-depth of our QAOA algorithm based on its performance on the new instances of size $n+1$ by inserting new layer(s). Our training protocol is able to find a close-by optimum of high quality parameters with this marginal increase in depth. To test the approach, we utilize QAOA for solving the Portfolio Diversification (PD) task through a discretization that maps it to the Maximum Independent Set (MIS) problem.

II. Portfolio Diversification and the Maximum Independent Set Problem

Our approach to defining the optimization problem generally follows Ref. [4], which considered

979-8-3315-4137-8/24/$31.00 ©2024 IEEE
DOI 10.1109/QCE60285.2024.10266

Authorized licensed use limited to: CBS Library. Downloaded on March 31,2026 at 21:09:38 UTC from IEEE Xplore. Restrictions apply.

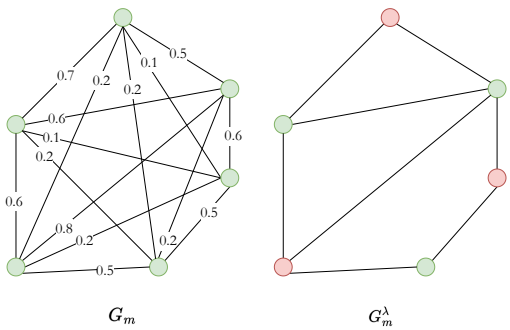

Figure 1: **Solving Portfolio Diversification through Maximum Independent Set** A covariance matrix C^m defines a weighted undirected graph G_m. By introducing a threshold $\lambda = 0.25$, the unweighted graph G_m^λ is defined such that the maximum independent set (colored red) represents the largest collection of assets with pairwise correlation below the threshold 0.25.

mapping and then solving QUBO formulations of Portfolio Diversification (PD) and hedging on the quantum annealing device Dwave 2000Q. Utilizing neutral atoms for solving PD was described in Ref. [5], [6].

Given a data set of assets $\mathcal{A}^m = \{a_1, \ldots, a_{|\mathcal{A}^m|}\}$ (such as stocks listed on the SP500) with a price price(a_1^t) listed for each day index t in a given month m, we define the daily return as the percentage increase in price for that asset on the given day $r_k^t = \frac{\text{price}(a_k^t) - \text{price}(a_k^{t-1})}{\text{price}(a_k^{t-1})}$.

Each day the stock was tradeable, it has a listed price and therefore daily return, r_k^t, for asset $k \in [1, |\mathcal{A}^m|]$ on day $t \in [1, T_m]$ of month m. We utilize every such day in a given month as a *sample* to estimate the average return of each asset and the pearson correlation coefficient between pairs of assets.

Given the average for month m as $\mu_i^m = \frac{1}{T_m - 1} \sum_{t=1}^{T_m} r_i^t$ and the sample covariance between daily returns r_i^t, r_j^t for a month m $\text{cov}(r_i^m, r_j^m) = \frac{1}{T_m - 1} \sum_{t=1}^{T_m} (r_i^t - \mu_m)(r_j^t - \mu_m)$. The sample standard deviation defined as: $\text{std}(r_i^m) = \sqrt{\frac{\sum_{t=1}^{T_m} (r_i^t - \mu_i^m)^2}{T-1}}$ and then the pearson correlation can be defined as: $C_{ij}^m = \frac{\text{cov}(r_i^m, r_j^m)}{\text{std}(r_i^m)\,\text{std}(r_j^m)}$, which takes a value between -1 (strong anticorrelation) and 1 (strong correlation) for each entry.

We introduce a correlation threshold λ to define an unweighted graph G_m^λ for each month m with $V_m = \{1, \ldots, |\mathcal{A}_m|\}$ and each vertex i is associated with an asset $a_i \in \mathcal{A}_m$ in the asset class for that month. Then E_m is defined such that: $(v_i, v_j) \in E_m$ iff $|C_{ij}^m| > \lambda$.

Maximum Independent Set (MIS) can be defined as a binary quadratically constrained linear programming problem for a given graph $G = (V, E)$ over $X = \{x_1, \ldots, x_n\}$ and $x_i \in \{0, 1\}$ with x_i associated with vertex $v_i \in V$ and $|V| = n$:

$$\begin{aligned} \text{minimize} \quad & \sum_i^n (1 - x_i) \\ \text{subject to} \quad & \sum_{(v_i, v_j) \in E} x_i x_j = 0. \end{aligned} \tag{1}$$

III. Quantum Alternating Operator Ansatz for the Maximum Independent Set Problem

Let $\sigma^x, \sigma^z, \sigma^y$ represent the standard Pauli matrices. Then let: $\sigma^0 = |0\rangle\langle 0|, \sigma^1 = |1\rangle\langle 1|, \sigma^- = |0\rangle\langle 1|, \sigma^+ = |1\rangle\langle 0|$. The embedded constraint operator [7], [8] can be written $\hat{C}_{\text{mis}} = \sum_{(v_i, v_j) \in E} \sigma_i^1 \sigma_j^1$.

There exists a mixer [2], [9] that irreducibly commutes [8] with $\hat{C}_{\text{mis}}$ and therefore constrains the evolution of the wavefunction within the independent set subspace given an initial state within the subspace [8]. Each generator g_j of the mixer is associated with a vertex v_j and its neighbors such that $g_j = \sigma_j^x \prod_{(v_j, v_k) \in E} \sigma_k^0$. To reduce the depth of implementing the mixing terms, we wish to find a grouping $\mathcal{M} = \{M_1, \ldots, M_{|\mathcal{M}|}\}$ such that $g_j, g_k \in M_l$ only if $[g_i, g_k] = 0$ so that the disjoint union $\bigcup_{M \in \mathcal{M}} M = \{g_i\}_{i=1}^n$. This problem is itself NP-hard, so we use a simple randomized algorithm to find decent partitions.

Then for each layer l, we have a parameter β_l such that the mixing operator is defined as $U_d(\beta_l) = \prod_{M \in \mathcal{M}} \prod_{g_j \in M} e^{-i\beta_l g_j}$. Because g_j is a projection operator such that $g_j^k = g_j$ for any k $e^{-i\beta_l g_j} = \sum_{k=0}^{\infty} \frac{(-i\beta_l g_j)^k}{k!} = \mathbb{1} + (e^{-i\beta_l} - 1) g_j$.

Authorized licensed use limited to: CBS Library. Downloaded on March 31,2026 at 21:09:38 UTC from IEEE Xplore. Restrictions apply.

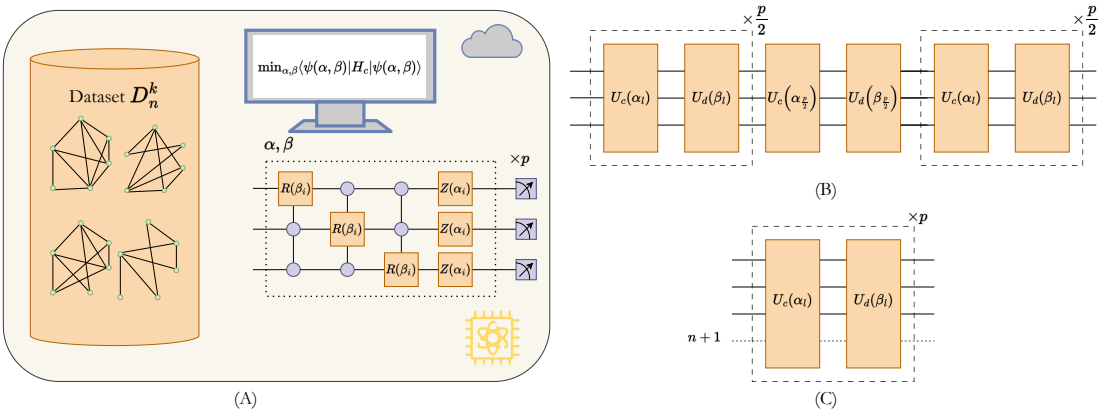

Figure 2: **Train-and-Scale method to train QAOA on progressively larger instances.** (A) QAOA is trained by a quantum-classical hybrid approach, where gradient steps are taken in the direction of minimizing the energy H_c on an instance drawn from D_n^k. (B) New layers are added (e.g. inserted in the middle for our experiments), trained, and then the whole circuit is trained together. (C) After training on a data set D_n^k, we generate a dataset D_{n+1}^k and transfer parameters α, β. Alg. 1 provides pseudocode.

The cost Hamiltonian is $H_c = \sum_{i=1}^{n} \sigma_i^0$, which specifies the phase-separation operator as $U_c(\alpha) = \prod_{i=1}^{n} e^{i\alpha\sigma_i^0}$.

For a p-depth QAOA circuit, the unitary is $U_p(\alpha, \beta) = U_d(\beta_p) U_c(\alpha_p) \ldots U_1(\beta_1) U_c(\alpha_1)$, with free parameters $\alpha = (\alpha_1, \ldots, \alpha_p)$ and $\beta = (\beta_1, \ldots, \beta_p)$ such that $\alpha, \beta \in [0, 2\pi]^p$.

Any valid independent set (or wavefunction with support only on such sets) can act as an initial state within the constrained subspace. We utilize the all zeros state associated with the empty set $|\psi(0)\rangle = |0\rangle^{\otimes n}$. The final state is found by applying the p-depth QAOA circuit on the initial state $|\psi(p)\rangle = U_p(\alpha, \beta)|\psi(0)\rangle$.

For the purpose of this manuscript, we utilize the parameter shift rule to approximate gradients through the expected energy of the cost Hamiltonian $\langle H_c\rangle_{\alpha,\beta} = \langle\psi(0)| U_p^\dagger(\alpha, \beta) H_c U_p(\alpha, \beta)|\psi(0)\rangle$.

IV. Train-and-Scale Method for Training on Subinstances of Increasing Size

Training Variational Quantum Algorithms [3] (VQAs) remains a challenging task even as larger and less noisy quantum systems are being manufactured in the private and public sphere. Finding high quality warm starts of larger depth circuits have become important for training VQAs at scale. For example, Refs. [10], [11], [12], [13] considered optimizing parameters on single instances looked at methods to add new layers while solving single instances.

We introduce the method Train-and-Scale, which targets size parameterized problems to trade-off increasing the depth of quantum circuits with the increasing size of instances. Without increasing circuit depth, the difficulty of solving larger size instances would fall entirely in the sampling complexity of a fixed size quantum circuit, likely leading to exponential scaling.

By training on families rather than individual instances, we can utilize large training times to find excellent parameters that can then be utilized very quickly on new instances not seen in training. In Sec. V, we see linear growth in p-depth maintains high quality approximation ratios and modest sampling complexity increase for the hardest instances for $n \leq 30$. If the trend of polynomial scaling in depth as well as sampling complexity continues for problem instances with hundreds of variables, such a QAOA circuit would be extremely useful for Portfolio Diversification on real datasets.

Authorized licensed use limited to: CBS Library. Downloaded on March 31,2026 at 21:09:38 UTC from IEEE Xplore. Restrictions apply.

Alg. 1 provides psuedo-code for how Train-and-Scale scales from a small instance size n_{min} to n_{max} with p_{min} used to train QAOA-p_{min} on n_{min} to begin with. For every size n from n_{min} and n_{max} we need access to a data set D_k^n associated with k instances of size n. For graph problems like MIS, we generate instances of n given a data set of larger graphs D at step 3 by breadth-first search around a randomly selected starting node. On step 4, we (re)train our QAOA-p circuit on the data set D_k^n. On step 5, a target depth p_{target} (e.g. $p+2$ in our experiments) is selected, determining how much to grow the circuit on instances of size n, given a QAOA-p circuit from size $n-1$. On steps 6-10, we repeatedly grow the circuit by inserting an identity layer in the middle of the circuit on step 8, training the new layer on D_k^n on step 9, and then (re)training the whole circuit QAOA-p on D_k^n. In Sec. V we consider a practical implementation of Train-and-Scale to solve Portfolio Diversification utilizing the parameter shift rule [14] to train the model.

Algorithm 1 Train-and-Scale

1: **Inputs:** D, k, n_{min}, n_{max}, p_{min}
2: $n \leftarrow n_{min}$
3: **while** $n < n_{max}$ **do**
4: Generate D_k^n
5: Train $U_p(\alpha, \beta)$ on D_k^n
6: Determine target depth p_{target}
7: **while** $p < p_{\text{target}}$ **do**
8: $p \leftarrow p + 1$
9: Insert 0 at index $\lceil p/2 \rceil$ on α, β
10: Train $U_p(\alpha, \beta)$ with only $\lceil p/2 \rceil$ active
11: Train all parameters of $U_p(\alpha, \beta)$
12: **end while**
13: $n \leftarrow n + 1$
14: **end while**
15: **return** α, β

Alg. 1: **Training and Scaling QAOA.** This algorithm trains QAOA on subgraph instances and then scales QAOA based on its performance.

V. Benchmarking on the SP500

A. Historical Dataset of SP500 Daily Prices

To test our method for solving the Portfolio Diversification (PD) problem, we used historical data for the SP500 stocks from the publicly available database Kaggle[1]. After cleaning, we have between 350 and 500 stocks for every month between 2010 and 2020[2]. This makes up our core data set and we utilize breadth-first search around a randomly selected starting node to generate instances of any size from $n = 6$ to $n = 30$.

B. Implementation of Train-and-Scale for Maximum Independent Set

To solve the Portfolio Diversification (Maximum Independent Set) problem on instances of λ thresholded covariance graphs from the SP500 (random graphs of fixed average degree), we generate data sets D_{500}^n with 500 graphs for each size n between 6 and 100 for $\lambda \in \{0.1, 0.2, 0.3, 0.4, 0.5\}$ ($d \in \{0.5, 0.6, 0.7, 0.8, 0.9\}$).

To train the circuit (step 4 and 9) we use $2^{17} \approx 130,000$ finite difference gradient updates based on the parameter shift rule, selecting a parameter uniformly at random with an initial learning rate of 0.02 and a shift size of 0.01. The training is split into 64 epochs and at each epoch the learning rate is decayed exponentially such that it reaches a learning rate of 0.002 on the last iteration. At each epoch, we compute the energy for each instance and utilize this to compute the gap. This requires knowledge of the minimum energy for the problem, which can become problematic if the sampling complexity for finding a solution (at step 3) is too great. However, in the size range considered, we never saw such a vanishing sampling probability (for example, below 2^{-20}). We then weigh instances based on the standard deviation range of their gap and a temperature parameter β set to 1. We use $p_{\text{min}} = 6$ and $n_{\text{min}} = 6$.

Fig. 3(A) shows the approximation gap of running Train-and-Scale where the increase of p for

[1]https://www.kaggle.com/datasets/paultimothymooney/stock-market-data/data

[2]This data set has survivorship bias.

Authorized licensed use limited to: CBS Library. Downloaded on March 31,2026 at 21:09:38 UTC from IEEE Xplore. Restrictions apply.

each n is 2 at the end of training on correlation graphs. The results show that $p = \mathcal{O}(n)$ provides quality solutions (lower than 0.5) consistently for different λ. Since $\lambda = 0.1$ has the lowest classical simulation cost, our other experiments focus on this, but Fig. 3(A) suggests QAOA-p can perform just as well for higher λ. Fig. 3(B) shows the sampling complexity for correlation graphs with $\lambda = 0.1$. Fig. 3(C) shows the sampling complexity of QAOA-54 on correlation graphs from $n = 6$ to $n = 100$ as well as that of simulated annealing, showing good transferrability for TnS QAOA and lower empirical scaling exponent (0.044 compared to 0.057).

VI. Conclusion and Future Directions

In this manuscript we describe the Train-and-Scale method for iteratively increasing the p-depth of QAOA by scaling up the depth and instance sizes of size-parameterized families for a given optimization problem with repeated warm starting and retraining. Our method shows a modest increase of p-depth can be sufficient to solve increasingly complex instances of hard optimization problems, as seen in Fig. 3. Furthermore, learned parameters on sizes scaled up to $n = 30$ with depth $p = 54$ show good transferability.

To the best of our knowledge, we report scaling on the largest size instances of hard optimization problems for QAOA-p to date. Our results show that Train-and-Scale is a robust method for keeping the circuit depth and solution sampling complexity of QAOA-p modest and help provide high quality parameters for intermediate scale depths on intermediate sized quantum systems to solve hard graph problems for hundreds of variables in the near future.

References

[1] J. R. McClean, J. Romero, R. Babbush, and A. Aspuru-Guzik, "The theory of variational hybrid quantum-classical algorithms," *New Journal of Physics*, vol. 18, no. 2, p. 023023, 2016.

[2] S. Hadfield, Z. Wang, B. O'gorman, E. G. Rieffel, D. Venturelli, and R. Biswas, "From the quantum approximate optimization algorithm to a quantum alternating operator ansatz," *Algorithms*, vol. 12, no. 2, p. 34, 2019.

[3] M. Cerezo, A. Arrasmith, R. Babbush, S. C. Benjamin, S. Endo, K. Fujii, J. R. McClean, K. Mitarai, X. Yuan, L. Cincio *et al.*, "Variational quantum algorithms," *Nature Reviews Physics*, vol. 3, no. 9, pp. 625–644, 2021.

[4] A. Kalra, F. Qureshi, and M. Tisi, "Portfolio asset identification using graph algorithms on a quantum annealer," *Available at SSRN 3333537*, 2018.

[5] S. Ebadi, A. Keesling, M. Cain, T. T. Wang, H. Levine, D. Bluvstein, G. Semeghini, A. Omran, J.-G. Liu, R. Samajdar *et al.*, "Quantum optimization of maximum independent set using rydberg atom arrays," *Science*, vol. 376, no. 6598, pp. 1209–1215, 2022.

[6] J. Wurtz, P. L. Lopes, N. Gemelke, A. Keesling, and S. Wang, "Industry applications of neutral-atom quantum computing solving independent set problems," *arXiv preprint arXiv:2205.08500*, 2022.

[7] I. Hen and F. M. Spedalieri, "Quantum annealing for constrained optimization," *Physical Review Applied*, vol. 5, no. 3, p. 034007, 2016.

[8] H. Leipold, F. M. Spedalieri, S. Hadfield, and E. Rieffel, "Imposing constraints on driver hamiltonians and mixing operators: From theory to practical implementation," *arXiv preprint arXiv:2407.01975*, 2024.

[9] Z. H. Saleem, "Max-independent set and the quantum alternating operator ansatz," *International Journal of Quantum Information*, vol. 18, no. 04, p. 2050011, 2020.

[10] G. E. Crooks, "Performance of the quantum approximate optimization algorithm on the maximum cut problem," *arXiv preprint arXiv:1811.08419*, 2018.

[11] E. Campos, D. Rabinovich, V. Akshay, and J. Biamonte, "Training saturation in layerwise quantum approximate optimization," *Physical Review A*, vol. 104, no. 3, p. L030401, 2021.

[12] X. Liu, A. Angone, R. Shaydulin, I. Safro, Y. Alexeev, and L. Cincio, "Layer vqe: A variational approach for combinatorial optimization on noisy quantum computers," *IEEE Transactions on Quantum Engineering*, vol. 3, pp. 1–20, 2022.

[13] P. C. Lotshaw, G. Siopsis, J. Ostrowski, R. Herrman, R. Alam, S. Powers, and T. S. Humble, "Approximate boltzmann distributions in quantum approximate optimization," *Physical Review A*, vol. 108, no. 4, p. 042411, 2023.

[14] G. E. Crooks, "Gradients of parameterized quantum gates using the parameter-shift rule and gate decomposition," *arXiv preprint arXiv:1905.13311*, 2019.

Authorized licensed use limited to: CBS Library. Downloaded on March 31,2026 at 21:09:38 UTC from IEEE Xplore. Restrictions apply.

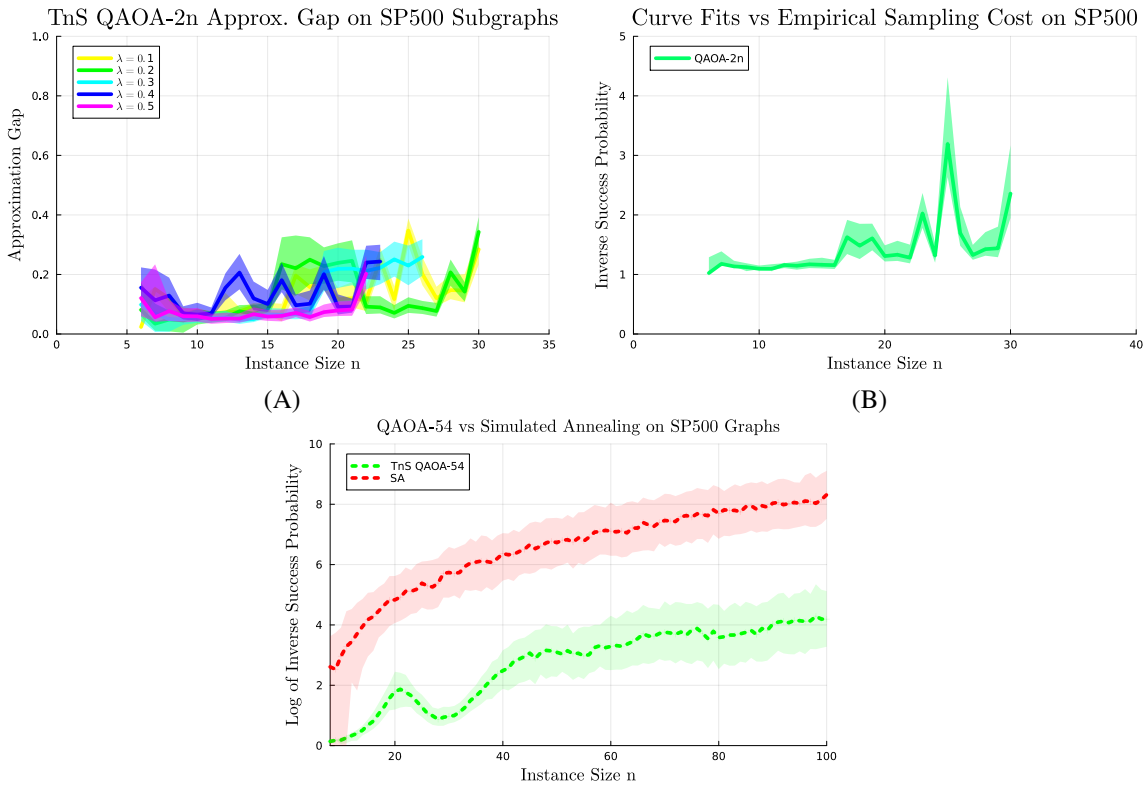

Figure 3: **Approximation Gap and Success Probability Scaling of TnS QAOA.** (A) shows the approximation gap of QAOA-$2n$ over instances of size n by the Train-and-Scale method for subgraph sizes between 6 and up to 30 (less for larger λ due to higher classical simulation cost). (B) shows the inverse of the success probability of QAOA-$2n$ for $\lambda = 0.1$. Expected sample complexity of QAOA trained up to $p = 54$ ($n = 30$) compared with expected number of iterations for constant temperature ($T = 1$) simulated annealing to sample a solution (over 10 runs) to the Portfolio Diversification problem given a number of assets between 6 and 100 for $\lambda = 0.1$. For each instance size, 500 graphs were utilized. Solid and dotted lines indicate the median while ribbons enclose the quartiles.

Authorized licensed use limited to: CBS Library. Downloaded on March 31,2026 at 21:09:38 UTC from IEEE Xplore. Restrictions apply.