2024 16th International Conference on COMmunication Systems & NETworkS (COMSNETS) | 979-8-3503-8311-9/24/$31.00 ©2024 IEEE | DOI: 10.1109/COMSNETS59351.2024.10427073

Generative learning with Qopula circuits

Amey Bhatuse*†, Ankit Khandelwal† and M Girish Chandra†
*CE & IT Department, Veermata Jijabai Technological Institute, India
†TCS Research, Tata Consultancy Services, India
Email: asbhatuse_b20@ce.vjti.ac.in, khandelwal.ankit3@tcs.com, m.gchandra@tcs.com

***Abstract*—Multivariate distribution modeling is a crucial process employed to capture dependencies in experimental data in areas like physics, chemistry, finance, and climate science. Copula distributions are a special class of multivariate distributions that have uniform marginals and have been studied extensively to model non-trivial dependencies in high-dimensional data. In the last decade, various ways of applying machine learning techniques to model copulas have been proposed to improve the pre-existing parametric models. Recently, with the advent of uniting machine learning and quantum computing, quantum generative models have been used to generate various data objects like images, probability distributions, natural language data, etc, using hybrid models that have both classical and quantum components. In this paper, we build on the recent work on utilizing quantum circuits to generate copulas and aim to provide a near-holistic study of how different quantum generative models can be implemented and tuned to capture correlations in real-world finance data.**

***Index Terms*—Copula, QCBM, QGAN, Genetic Algorithms, qopula circuits, multivariate distribution modeling**

I. Introduction

Analysis of real-world data involves detecting, modeling, or quantifying dependence among multiple variables to enhance our understanding of how complex phenomena occur. Correlation is the statistical term used to describe the level of this dependence between those variables. Modeling multivariate distributions is a common procedure used to capture correlation among variables, which can be complex when the number of variables increases. Copula are multivariate distributions, especially useful when the data has features like tail dependence [1]. Due to their ease of use and strong theoretical structure, they find use in various fields like energy, environment, forestry [2] or even finance [3]. In quantitative finance, areas like risk management [4] and derivatives pricing [5] are domains of copula applications. However, copula modeling performed using parametric models like Elliptical [6] or Archimedean copula [7] sometimes fails due to the unfair scaling of parameters with respect to the increasing dimensions. In the last decade, generative models have been used extensively for modeling statistical objects [8] to deal with these issues. These models register the underlying information of data objects and seek to replicate their behavior via an iterative learning process. More recently, advances in quantum machine learning have witnessed the creation of quantum generative models for various applications [9]. Considering the success of quantum models in these tasks and based on the theoretical framework laid out in [10], [11] of relating copulas with quantum circuits, this paper aims to provide a more comprehensive view of the various factors that need to be considered when quantum generative models are used to model copulas in the NISQ era. Models like QGAN and QCBM trained using various methods are used to generate target discrete distributions. The trained circuits from these models provide discrete samples that are converted in the continuous copula space by applying appropriate transformations. The performance of every quantum model is compared with a suitable classical parametric model via statistical tests on generated samples from each model. Considering the underlying theory behind these circuits [10], an evaluation regarding how the initial state of the quantum circuit might affect performance is presented. Furthermore, different continuous-discrete interconversion techniques are employed to understand the impact of the varied levels of precision used while representing continuous data samples with discrete binary strings similar to that sampled from a quantum circuit.

II. Copulas and Quantum Circuits

Copulas are a great tool for understanding correlations between multiple variables because they do so by eliminating the underlying marginal distributional structure of those variables. More formally, a copula is a joint distribution of multiple variables, each forming a uniform marginal distribution. Sklar's Theorem [12] states that the multivariate distribution density of multiple random variables can be given by a product of the copula density and the marginal distribution density of each variable. This can also be expressed in terms of their cumulative distribution functions. Suppose, two random variables X and Y form a joint probability distribution,

$$F(X,Y) = C(F_X(X), F_Y(Y)) \tag{1}$$

where C is called the copula cumulative distribution function for $F_X(X)$ and $F_Y(Y)$ while $F(X,Y)$ is the joint cumulative distribution function for X and Y. $F_X(X)$ and $F_Y(Y)$ are obtained by applying the probability integral transform on X and Y, i.e., transforming the random variables forming an empirical distribution to variables having uniform distribution by passing them to their respective cumulative distribution functions.

Reference [10] showed that learning a copula distribution corresponds to learning a certain multipartite maximally entangled state. The intuition is that for some particular maximally entangled state, the reduced state is maximally mixed, which

Authorized licensed use limited to: CBS Library. Downloaded on March 31,2026 at 21:19:23 UTC from IEEE Xplore. Restrictions apply.

forms a uniform distribution if an orthonormal basis for the states is considered. If we have a maximally entangled state as the initial state, it helps satisfy the uniform marginal condition of the copula distribution. Then, qubits within this initial state can be acted upon by certain gates to model the required correlation without disturbing the entanglement between them. A certain class of circuits called qopula circuits [10] are proven to generate such maximally entangled states along with a theoretical guarantee that, in the worst case, these circuits can give exponential complexity separations against classical computation. Thus, in the process, learning classically intractable joint probability distributions efficiently becomes a real possibility. For this study, we use the circuit proposed in [11], also shown in Fig. 1a, for all the experiments with varying circuit size and depth.

III. Continuous-Discrete Interconversion

The quantum circuit gives out binary strings of size n as output, which gives a discrete distribution with 2^n bins for a n-qubit circuit. So, the continuous copula space data is first converted into discrete binary strings to form a target discrete distribution, which the model further utilizes to compare against the distribution generated by the quantum circuit. Once the model learns to generate a distribution close to the target distribution, binary string samples generated from the trained circuit are converted back to the continuous regime using an inverse transformation. For each random variable in copula space, values in the $[0, 1)$ range are converted to binary strings and later concatenated sequentially. For example, in the case of a bi-variate distribution, for a circuit with six qubits, samples "100" and "101" for variables 1 and 2, respectively, are concatenated to form "100101", performing a similar operation on every sample yields the discrete distribution with $2^6 = 64$ bins. Consequently, samples from a trained circuit with size 6 are divided into individual samples for each variable with size 3, followed by the inverse transformation. We experiment with three different types of binning strategies and their corresponding inverse transforms. Each technique works similarly on a fundamental level in that the range [0,1) is divided into $2^{n/m}$ intervals for n qubits and m variables (in the above example, $n = 6$ and $m = 2$). Every continuous value within a specific interval is given the same binary value. Finding the intervals is the distinguishing factor for each binning technique. The techniques are explained in the following subsections.

A. Generic Binning

This technique is inspired from [11]. The range is divided into equally spaced intervals with interval points being $\frac{1}{2^z}\sum_{j=0}^{z-1} b_{i,j}2^j$, for each binary number $b_i = b_{z-1}b_{z-2}\ldots b_0$ of size $z = n/m$, thus, making the total number of intervals $2^{n/m}$. For example, for a variable represented using 2 qubits, there will be 4 intervals with endpoints $[0, 0.25, 0.50, 0.75, 1]$, then each value between $[0.25, 0.50]$ corresponding to $[01, 10]$ is assigned the binary value 01 and so on. For the inverse

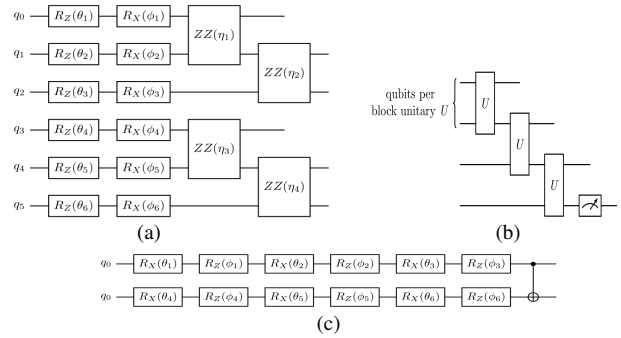

Fig. 1. Quantum circuit ansatz used in the models. (a) Generator circuit ansatz following a maximally entangled state where the gates RZ, RX, and RZZ gates act separately on qubits representing each variable. (b) MPS Discriminator circuit used for QGAN. (c) quantum circuit used within each block U of the MPS circuit.

transformation, the binary value is first converted to the corresponding endpoint value. Later, a random value is sampled uniformly from the interval corresponding to the endpoint and then added to the endpoint value, thus keeping the range of values consistent with the continuous data.

B. Equal Binning

In this strategy, the whole set of samples is first divided into $2^{n/m}$ sets. The extreme values from each set are taken as the endpoints of intervals. The procedure to digitize into binary values and further inverse transformation is similar to generic binning.

C. k-Means Binning

k-Means clustering model is fit to the data with $k = 2^{n/m}$. This forms k subsets of the entire dataset by predicting labels for the data using the fitted model. The extreme values from each set are taken as endpoints that are eventually used for digitizing and reverse transforming, similar to the generic and equal binning techniques.

IV. Dataset

The benchmark Indian stock market indices, namely NIFTY 50, NIFTY BANK, and NIFTY IT, are used in this study. NIFTY 50 is the weighted average of 50 of the largest Indian companies' stocks listed on the Indian National Stock Exchange (NSE). Similarly, NIFTY BANK and NIFTY IT are weighted averages of 12 banks' and 10 IT companies' stocks listed on the NSE, respectively. The dataset consists of closing prices from 29-04-2014 till 29-04-2019, from which returns for each index are calculated. These returns are converted to samples in copula space using the probability integral transform, which are eventually utilized for the distribution modeling task.

V. Generative Model and Learning Strategies

A. Quantum Generative Adversarial Networks

Quantum Generative Adversarial Networks are quantum analogues of classical GANs, recently proposed for various tasks like image generation or learning distributions. A

Authorized licensed use limited to: CBS Library. Downloaded on March 31,2026 at 21:19:23 UTC from IEEE Xplore. Restrictions apply.

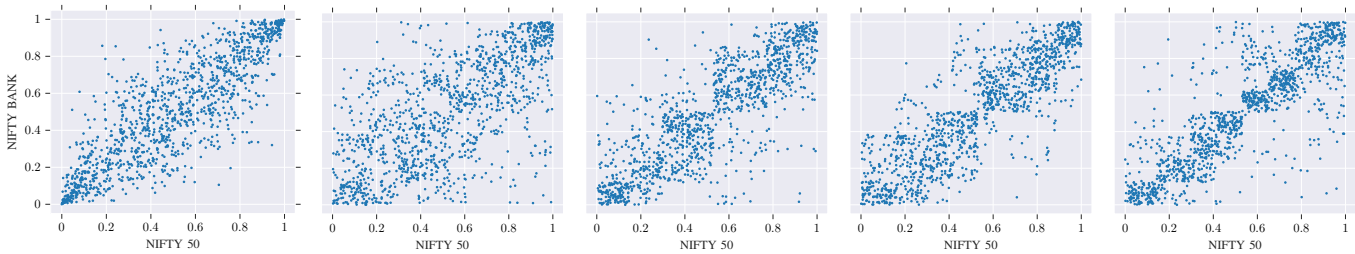

(a) Original data (b) QGAN (c) QCBM - Regular (d) QCBM - Annealing (e) QCBM - Genetic

Fig. 2. Original data samples and samples generated from quantum models for NIFTY 50 and NIFTY BANK. A 6 qubit circuit with 8 layers and the K Means binning strategy is used. (a) Original data samples. Generated samples from (b) QGAN (c) QCBM-Regular (d) QCBM-Annealing (e) QCBM-Genetic

plethora of QGAN variants [13] have been introduced by modifying components of a classical GAN, such as - using a quantum generator (classical generator) with classical discriminator (quantum discriminator), using quantum adversaries for both networks, using tensor networks [14], also using specialized metrics for scaling performance and ensuring robustness [15]. For our study, we designed a QGAN model specific to our problem of generating a discrete distribution. Earlier work [10] on the topic used a hybrid model; in contrast, we employ quantum circuits for both networks. The generator variational quantum circuit Fig. (1a) produces the discrete distribution of quantum basis states. These basis state probabilities are then loaded onto the discriminator circuit to form an initial quantum state. It is followed by an MPS (matrix product state) circuit (Fig. 1b, 1c) to classify the loaded quantum state as either fake (generated) or real (target). The maximum likelihood loss is used for adversarial training of both generator and discriminator networks. Details about the discriminator circuit can be found in Fig. 1.

B. Quantum Circuit Born Machines

Quantum Circuit Born Machines are generative models similar to Boltzmann machines [16] that can represent probability distributions using pure quantum states and generate samples via projective measurements on the qubits. For our study, we consider the QCBM algorithms proposed in [10], [11]. This paper provides a more comprehensive evaluation of the models with respect to the circuit size and depth. Even though we only use gradient estimating algorithms like SPSA (Simultaneous Perturbation Stochastic Approximation) [17] for the generative part of the models, differentiable learning for QCBMs [18] is also a topic of recent research. Other than the previously proposed gradient-based approaches, a non-gradient-based approach using genetic algorithms [19] with some modifications to the original algorithm custom to our circuit design is also considered.

1) Regular and Annealing Training: The quantum circuit with varying number of layers - 4, 8, 16 is tested for convergence with both regular and annealing strategies. This same strategy is adopted for the QGAN model. The parameters of the quantum circuit are initialized by using random values from $[-\pi, \pi]$. The KL (Kullback-Leibler) divergence is used as a cost function, and the quantum circuit is trained for 1000 epochs using SPSA with hyperparameters $c = 0.1$, $a = 0.1$.

The annealing approach inspired from [11] is used with a small modification in that a linear combination of target distribution and generated distribution rather than a fuzzy target is used for cost measurement to optimize the circuit, $p_z(x) = \mu p_g(x) + (1 - \mu)p_r(x)$ - where $p_r(x)$ = target distribution, $p_g(x)$ = generated distribution. With $\mu = 0.8$, which gives better results heuristically, $p_z(x)$ is compared against the target distribution $p_r(x)$. The ramp-down steps for μ are similar to that used in [11]. The intuition is also similar to that mentioned in the paper that by using an adaptive cost function, we essentially perform relatively easier training in the early stages and then gradually increase difficulty, which helps to avoid issues like vanishing gradients or getting stuck in local minima. Experimental evidence such as the ones presented in Table I suggests that this kind of approach achieves better results than the classical model even with low qubit count circuits.

2) Genetic Algorithm: GAs are evolutionary algorithms [20] that are used as adaptive search-based optimization techniques for problems that are difficult to solve with other relevant optimization methodologies. They are especially useful as non-differentiable alternatives to problems that cause issues when tried to solve with differentiable learning. The basic workings of a genetic algorithm can be stated as follows: In the first iteration, parameters are initialized via random sampling from a valid set of possible values for parameters, creating several candidate solutions called a generation. A few solutions that attain minimum values for a fitness function, which is analogous to a cost function used in differentiable learning techniques, are selected from these candidate solutions. These few best solutions undergo various operations like mutation and crossover inspired by natural selection, and new solutions are created, forming a new generation for the next iteration. The intuition is that by iterating over these steps for a sufficient duration will yield a solution that matches the target solution at least approximately. Here, we use the algorithm proposed in [19] but using a different mutation routine, which is more suitable for our circuit design. The hyperparameters responsible for running the algorithm are I = total iterations of the algorithm, N = number of new generations in each iteration, M = number of best solutions considered for mutation, m = variable used for generating parameter values, ν = number of mutations in each layer of circuit, α = probability of mutation in a certain iteration, β = control parameter for deciding value of α in every iteration

Authorized licensed use limited to: CBS Library. Downloaded on March 31,2026 at 21:19:23 UTC from IEEE Xplore. Restrictions apply.

The components of the algorithmic routine used are as follows:

a) Search Space: As specified in [19], the interval $[-\pi, \pi]$ is divided into 2^m equal subintervals, and the point of each cut along with the edges of the interval is considered to be part of the set K of values that the circuit parameters can be assigned. Thus, an angle parameter can mutate to any discrete value of the set $K = \{\theta_i | \theta_i \in -\pi + i\pi/2^m, i = 0, \ldots, 2^m\}$.

b) Mutation Strategy: The quantum circuit (Fig. 1a) can have multiple layers, while the number of qubits determine the number of parameters in each layer. The mutation strategy follows the given steps:

- For each mutation cycle, parameters in each layer are considered separately for mutation. We randomly select a parameter in each layer and mutate it by randomly selecting an angle from the set K.
- Each mutation happens with probability α, which has an initial value of 1 and keeps on decreasing by a factor of $e^{-\beta}$ in each subsequent iteration.

c) Fitness Function: The fitness function quantifies the measure of distance between candidate solutions and target solutions. Contrary to the fitness function used in [19] and experimenting with a few other functions, we finally utilize the Euclidean distance between the generated samples and real samples from data as a fitness measure for learning the copula distribution.

VI. Model Evaluation

While modeling complex distributions, statistical tests are tools for inference and analysis. KS (Kolmogorov–Smirnov) statistic [21] is a common metric used to evaluate the performance of generative models in distribution modeling. However, to consolidate the evaluation of models, we consider another non-parametric test based on the energy distance between distributions [22]. The intuition for energy distance can be derived from the notion of potential energy between objects in a gravitational space where the potential energy between those objects is zero if their position in space coincides. At the same time, it increases as the distance between them increases. The E-statistic test calculates the energy distance between samples to measure the difference between their respective distributions. Let $X = (X_1, X_2, \ldots, X_{n_1})$ and $Y = (Y_1, Y_2, \ldots, Y_{n_2})$ be two random samples. Then, the equation for energy distance between X and Y is stated as [22],

$$\begin{aligned} E_{n_1,n_2}(X,Y) &= \frac{2}{n_1 n_2} \sum_{i=1}^{n_1} \sum_{m=1}^{n_2} |X_i - Y_m| \\ &- \frac{1}{n_1^2} \sum_{i=1}^{n_1} \sum_{j=1}^{n_1} |X_i - X_j| - \frac{1}{n_2^2} \sum_{l=1}^{n_2} \sum_{m=1}^{n_2} |Y_l - Y_m| \end{aligned} \tag{2}$$

The Student T copula is fitted to the data as part of the classical parametric model for evaluation and comparison with the quantum counterparts. The real data is bootstrapped by drawing 1000 samples from the whole dataset. PennyLane [23] is used for creating the quantum models. The quantum circuit has six qubits, three qubits each for samples from NIFTY 50 and NIFTY BANK, and eight layers. Each model is run five times with different random initialization of parameters. For every run, five sets of 1000 instances are sampled from the trained circuit for calculating both the KS-statistic and E-statistic, and the mean value over these sets is registered. The Python package ndtest (github.com/syrte/ndtest) is used for calculating both statistics. Thus, five different values for both statistics for each model are captured with their respective p-values. Considering a p-value of 0.05 as significant, the range of the statistics captured in those final five values is displayed in Table I i.e., only those values that pass the test are considered for performance evaluation.

TABLE I: KS statistic and E-statistic values over multiple model runs with the generic binning technique.

	KS statistic	E-statistic
Classical (Parametric)	0.0416 - 0.0443	0.0013 - 0.0019
QGAN	0.0418 - 0.0458	0.0033 - 0.0040
QCBM - Regular	0.0385 - 0.0460	0.0014 - 0.0023
QCBM - Annealing	0.0398 - 0.0452	0.0014 - 0.0028
QCBM - Genetic	0.0414 - 0.0590	0.0034 - 0.0038

TABLE II: Average KS statistic values for QCBM-Regular over multiple runs with the generic binning technique.

	4 layers	8 layers	16 layers
4 qubits	0.0460	0.0432	0.0419
6 qubits	0.0427	0.0413	0.0409
8 qubits	0.0410	0.0397	0.0455

It is evident from the results that the quantum models give performance similar to the classical parametric model. The results are relatively better in the case of QCBM with regular and annealing training. In the case of the genetic algorithm, experimental evidence suggests that using either a large set of permissible angle values or having many layers in the circuit makes convergence an issue since the search space increases exponentially. Also, performing too many mutations in a single solution causes the cost value to vary rapidly, indicating that the final distribution varies too much in a single generation. For our model, the following values for the hyperparameters gave relatively better results: $I = 200$, $N = 100$, $M = 25$, m = total qubit count (depending on the circuit), $\nu = 1$ (per circuit layer), $\alpha = 1$, $\beta = 0.013863$. Fig. 2 provides comparison between real data distribution and generated distribution from each model using scatterplot representation. However, it is essential to understand that the correlation present in the data is trivial enough to be captured by a classical parametric model and, hence, the performance. This suggests that there is potential for the quantum models to perform better in cases where the dependence is not possible to capture with the classical model.

Another minor experiment (Table II) where we vary the circuit size and depth and note the average KS statistic value over multiple runs gives evidence that the model performs

Authorized licensed use limited to: CBS Library. Downloaded on March 31,2026 at 21:19:23 UTC from IEEE Xplore. Restrictions apply.

better with growing circuit dimensions, making it evident that increasing precision does provide better results. It is equally important to note that training of quantum circuits involves dealing with significant issues like barren plateaus and vanishing gradients for larger and deeper circuits. This is also supported by the statistic value for the 8 qubits - 16 layers circuit, which shows a sudden rise compared to the natural trend followed by the rest of the values in the table.

VII. Initial State Comparison

As mentioned in [10], it is possible to initialize the quantum circuit with different initial states that satisfy the maximum entanglement condition. Depending on the system size, there can be various maximally entangled states. A comprehensive survey [24] of such states suggests that various measures exist to quantify their entanglement measure. Also, different states give different values for each measure depending on the process used to calculate them. Here, we use the Bell states for two variables and the GHZ and W states for the three-variable case. The W state in case of two variables W $= 1/\sqrt{2}(|01\rangle + |10\rangle)$ matches with one of the Bell states.

In the three variables case, three qubit W state is given by $\mathrm{W} = 1/\sqrt{3}(|001\rangle + |010\rangle + |100\rangle)$. To understand the impact of the initial state, we vary the number of qubits, keeping the number of layers in the circuit constant, and measure the minimum KL divergence possible in each case. The QCBM model, each time with 8 layers, is trained with the regular strategy with 4, 6, and 8 qubit circuits. Fig. 3a and Fig. 3b show results for the two variable and three variable cases, respectively. For the three-variable case, NIFTY IT is used along with NIFTY 50 and NIFTY BANK. From the figures, it is evident that there is not much separation for the two variable case which can be attributed to the fact that the two-qubit W state is just another Bell state. However, with the 3 qubit W state, there is a clear difference between the two states. The minimum KL divergence possible after model convergence is higher for the W state than the GHZ state. One plausible reason for this issue is that with the W state, the reduced density matrix is not an identity matrix, it is $2/3\,|01\rangle + 1/3\,|10\rangle$, i.e., the resulting state is not maximally mixed, which is a vital condition to model the copula distribution and obeying the uniform marginal constraint. Hence, we have clear evidence that only such specific kinds of maximally entangled states, i.e., ones that reduce to maximally mixed states for subsystems for the quantum circuit, will achieve good results when generating the target distribution.

VIII. Binning Strategy Evaluation

As mentioned in the previous section on binning techniques, a thorough evaluation of the continuous-discrete interconversion strategy is required to ensure that the discretization process does not act as a bottleneck to carry information from the data to the model. Another significant reason for this effort is that we fit a probability distribution to the data instead of using the empirical distribution. In such a case, the probability integral transform converts the distribution to

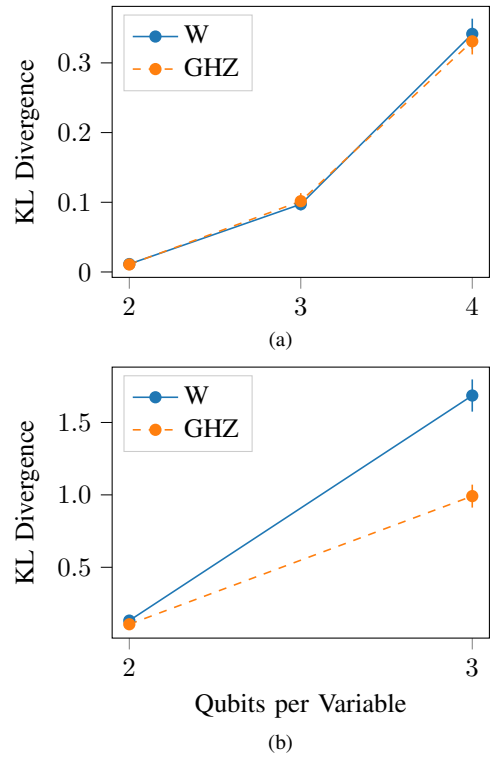

Fig. 3. Minimum KL divergence achieved for circuits having different initial states. (a) Minimum cost achieved with 2 variables - NIFTY 50 and NIFTY BANK. (b) Minimum cost achieved with 3 variables - NIFTY 50, NIFTY BANK, and NIFTY IT

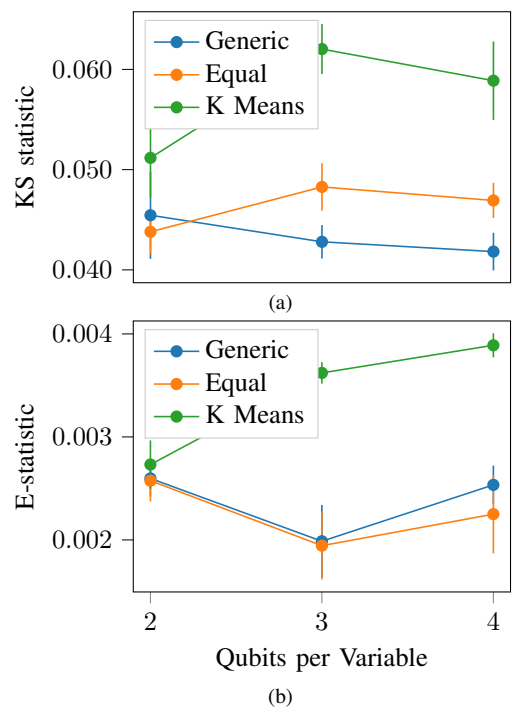

Fig. 4. KS statistic and E-statistic values for the QCBM model trained using different binning strategies and varying qubit count. (a) KS statistic values. (b) E-statistic values. Error bars give a 95% confidence interval over 20 model runs.

Authorized licensed use limited to: CBS Library. Downloaded on March 31,2026 at 21:19:23 UTC from IEEE Xplore. Restrictions apply.

only approximately uniform, provided the sample size is large. Here, we present a short study that uses appropriate statistical tests to quantify the distance between the true samples from the data and the generated samples from the model.

A set of 1000 samples is sampled from the training data for the two variables NIFTY 50 and NIFTY BANK for comparison with the generated samples. The QCBM model each time with 8 layers is trained with the regular strategy to carry out inference on the bootstrapped data. For each binning technique, we train 20 models for a varying number of qubits. A set of 1000 samples is sampled from every trained circuit which are converted to copula space, and two statistical distances - KS-statistic and E-statistic are calculated against the bootstrapped samples. The mean values, along with the 95% confidence interval, are depicted in Fig. 4a and Fig. 4b for both statistics. A p-value of 0.05 was considered significant enough to pass the test. For each statistic, values from only those models that passed the test were considered for final evaluation. The correct interpretation of the results gives an idea regarding which strategy might be optimal with respect to the system size, i.e., the size of the quantum circuit for a certain amount of depth. The generic and equal binning procedures perform similarly overall. To our surprise, the k-means binning technique performs sub-optimal relative to the generic and equal binning techniques even though it considers the region of concentration of samples over the sample space while forming the intervals. However, it is important to note that these results are specific to the dataset used. Hence, different types of data with different distributions might show distinct trends for these statistical distances. For all techniques, in the case of energy distance, the values show a sudden upward trend with more qubits per variable in contrast to the KS statistic, which shows a downward trend.

IX. Conclusion

The quantum models perform similar to the classical parametric model in the case of the QGAN and the QCBM-Genetic, whereas in the case of QCBM, the regular and the annealing-based models performed slightly better, indicating an advantage with just a few qubits. The QCBM trained using the genetic algorithm approach has ample scope for improvement, for example, by using a custom fitness function depending on the domain of the problem and the type of data. Also, various mutation strategies instead of using fixed angle values can be tried to check for improved convergence. Even though the data considered in this paper had a seemingly visible correlation, which the classical parametric model could capture, we do think that data with low correlation or complex dependency structure can be a point where the quantum and classical approaches show major separation with the quantum models performing better in such cases. The finance world is a significant area for the application of quantum based copula models. Hence, a possible future research direction on the topic can be pricing derivatives as is tried in the case of risk aggregation [11]. Nevertheless, having established a theoretical foundation, the possibility of qopula circuits has opened the doors for a new area of research worth exploring.

References

[1] R. Aloui, M. S. B. Aïssa, and D. K. Nguyen, "Global financial crisis, extreme interdependences, and contagion effects: The role of economic structure?" *Journal of Banking & Finance*, vol. 35, no. 1, pp. 130–141, 2011.

[2] M. I. Bhatti and H. Q. Do, "Recent development in copula and its applications to the energy, forestry and environmental sciences," *International Journal of Hydrogen Energy*, vol. 44, no. 36, pp. 19 453–19 473, 2019.

[3] J.-F. Jouanin, G. Riboulet, and T. Roncalli, "Financial applications of copula functions," Jun 2003.

[4] X. Zhang and H. Jiang, "Application of copula function in financial risk analysis," *Computers & Electrical Engineering*, vol. 77, pp. 376–388, 2019.

[5] F. Abid and N. Naifar, "The application of copulas in pricing dependent credit derivatives instruments," *Journal of Applied Economic Sciences*, vol. 3, Jan 2008.

[6] G. Frahm, M. Junker, and A. Szimayer, "Elliptical copulas: applicability and limitations," *Statistics & Probability Letters*, vol. 63, no. 3, pp. 275–286, 2003.

[7] N. Naifar, "Modelling dependence structure with archimedean copulas and applications to the itraxx cds index," *Journal of Computational and Applied Mathematics*, vol. 235, no. 8, pp. 2459–2466, 2011.

[8] M. Wong and B. Farooq, "A bi-partite generative model framework for analyzing and simulating large scale multiple discrete-continuous travel behaviour data," *Transportation Research Part C: Emerging Technologies*, vol. 110, pp. 247–268, 2020.

[9] J. Tian *et al.*, "Recent advances for quantum neural networks in generative learning," *IEEE Transactions on Pattern Analysis and Machine Intelligence*, vol. 45, no. 10, pp. 12 321–12 340, Oct 2023.

[10] E. Y. Zhu *et al.*, "Generative quantum learning of joint probability distribution functions," *Phys. Rev. Res.*, vol. 4, p. 043092, Nov 2022.

[11] D. Zhu, W. Shen, A. Giani, S. Majumder, B. Neculaes, and S. Johri, "Copula-based risk aggregation with trapped ion quantum computers," Jun 2022.

[12] F. Durante, J. Fernández-Sánchez, and C. Sempi, "A topological proof of sklar's theorem," *Applied Mathematics Letters*, vol. 26, no. 9, pp. 945–948, 2013.

[13] T. A. Ngo, T. Nguyen, and T. C. Thang, "A survey of recent advances in quantum generative adversarial networks," *Electronics*, vol. 12, p. 856, 02 2023.

[14] W. Huggins, P. Patil, B. Mitchell, K. Whaley, and E. Stoudenmire, "Towards quantum machine learning with tensor networks," *Quantum Science and Technology*, vol. 4, Jan 2019.

[15] S. Chakrabarti, H. Yiming, T. Li, S. Feizi, and X. Wu, "Quantum wasserstein generative adversarial networks," in *Advances in Neural Information Processing Systems*, vol. 32, 2019.

[16] S. Cheng, J. Chen, and L. Wang, "Information perspective to probabilistic modeling: Boltzmann machines versus born machines," *Entropy*, vol. 20, Dec 2017.

[17] J. C. Spall, "A stochastic approximation technique for generating maximum likelihood parameter estimates," in *1987 American Control Conference*, 1987, pp. 1161–1167.

[18] J.-G. Liu and L. Wang, "Differentiable learning of quantum circuit born machines," *Phys. Rev. A*, vol. 98, p. 062324, Dec 2018.

[19] A. Kondratyev, "Non-differentiable learning of quantum circuit born machine with genetic algorithm," *SSRN Electronic Journal*, Jan 2020.

[20] M. Srinivas and L. Patnaik, "Genetic algorithms: a survey," *Computer*, vol. 27, no. 6, pp. 17–26, 1994.

[21] J. A. Peacock, "Two-dimensional goodness-of-fit testing in astronomy," *Monthly Notices of the Royal Astronomical Society*, vol. 202, no. 3, pp. 615–627, 03 1983.

[22] G. J. Székely and M. L. Rizzo, "Energy statistics: A class of statistics based on distances," *Journal of Statistical Planning and Inference*, vol. 143, no. 8, pp. 1249–1272, 2013.

[23] V. Bergholm, J. Izaac, M. Schuld, C. Gogolin, and N. Killoran, "Pennylane: Automatic differentiation of hybrid quantum-classical computations," Nov 2018.

[24] P. Facchi, G. Florio, G. Parisi, and S. Pascazio, "Maximally multipartite entangled states," *Physical Review A*, vol. 77, p. 060304, Nov 2007.

Authorized licensed use limited to: CBS Library. Downloaded on March 31,2026 at 21:19:23 UTC from IEEE Xplore. Restrictions apply.