2024 International Conference on Trends in Quantum Computing and Emerging Business Technologies
CHRIST (Deemed to be University), Pune Lavasa Campus, India. Mar 22-23, 2024

2024 International Conference on Trends in Quantum Computing and Emerging Business Technologies (TQCEBT) | 979-8-3503-8427-7/24/$31.00 ©2024 IEEE | DOI: 10.1109/TQCEBT59414.2024.10545170

Quantum Graph Neural Networks for Portfolio Optimization in Complex Financial Markets, A Novel Approach

1st Hasan Mustafa
QuantumAI Lab
Fractal Analytics
Gurgaon, India
hasan.mustafa@fractal.ai

2nd Prateek Jain
QuantumAI Lab
Fractal Analytics
Gurgaon, India
hasan.mustafa@fractal.ai

***Abstract*—Quantum machine learning is an emerging field, combining ideas from quantum computing and machine learning. In this paper we propose a novel quantum graph neural network for modelling financial time series. We demonstrate a proof of concept model implemented in pytorch-geometric and pennylane and benchmark the results on the Cora dataset. Further, we apply the model to financial time series data(NIFTY50) where we predict the movement of stock prices.**

***Index Terms*—Quantum machine learning, Quantum computing, Quantum Graph neural network, Graph neural network**

I. Introduction

Machine learning has witnessed several recent advancements which have been adapted for quantum computing paradigm particularly to suit the NISQ era. Recently, several analogues to classical machine learning have been experimented with. These include various variants of quantum neural networks such as QCNNs, QLSTMs etc and alternatively Quantum kernel methods [1]. The domain of quantum machine learning is ripe with opportunities albeit there are challenges with physical hardware that is currently dubbed as belonging to the NISQ era(Noisy-Intermediate scale quantum computers). These devices are characterised by short coherence times, high noise and low number of logical qubits. This makes implementation of algorithms that require entangling several qubits almost impossible to attempt. Quantum machine learning however is touted as one of the most suitable class of algorithms for the NISQ era as the feedback-based methods in machine learning are expected to mitigate the errors to some extent.

A recent topic of interest in the machine learning community has been graph neural networks, which generalize concepts such as recurrent neural networks and convolutional neural networks to a more arbitrary network [2]. Several important systems of interest can be modelled as a network or a graph, for example, Social networks with users as nodes of a graph and the interaction between them modelled as an edge attributes. Several chemical compounds can be modelled as graphs of interconnected atoms. Graphs allow flexibility in constraining the structure as per need, they may be directed or bidirectional, can have variable size and can have different degrees of association within the nodes.

Application of quantum machine learning to financial modelling has also been a topic of recent interest. Problems in finance have a stochastic nature which makes it challenging to model. Various machine learning and statistical techniques are currently used for a plethora of applications including portfolio optimisation, derivative pricing, futures and options pricing, forecasting, risk management and so on. Several of these problems have been approached from the lens of quantum computing using a wide variety of algorithms such as QGANs, VQEs, QAOA etc.

This work was motivated by recent advances in the fields of quantum machine learning and graph neural networks. In this paper, we propose a novel quantum graph neural network. We demonstrate a proof of concept model implemented in pytorch-geometric and pennylane and benchmark the results on the Cora dataset. Further, we apply it to financial time series data where we predict stock movement direct based on historic prices and the association information between stocks.

II. Related Work

A. Graph Neural Network

A graph is a set of nodes connected by edges. Examples of graphs are connections of users in a social network, a network of roads, in more recent times data on the spread of an infection can be treated as a graph, more common structures such as an image and temporal can also be thought of as a graph with a defined structural motif. A typical neural network is not suited for graph data a) because the graph has no defined structure b) the operations of a general neural network are not permutation invariant or equivariant.

- Permutation Invariance: A permutation invariant function does not depend on the order of the nodes that is if the graph is represented as an adjacency matrix then the permutation of the rows or columns would not change the output of the function.

Authorized licensed use limited to: CBS Library. Downloaded on March 31,2026 at 19:55:41 UTC from IEEE Xplore. Restrictions apply.

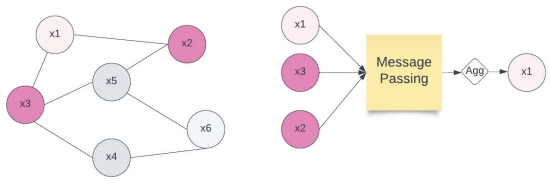

Fig. 1: GNN Architecture

- Permutation Equivariance: A permutation equivariant function permutes the output if the input representation is permuted [3].

The importance of these invariances arises from the fact that even though a graph may not have an intrinsic structure, a structure is imposed on it when it is represented(usually as an adjacency matrix) for calculations, thus to preserve the properties of the graph such functions must be used. This requires designing of special architectures to handle the graph data structure. A graph neural network operates on a graph dataset. It consists of two important operations, message passing and aggregation.

- Message Passing: Transforms the message inbound from neighbouring nodes.
- Aggregation: Aggregate the inbound messages to update the value of the node.

Usually, a self-loop is introduced in the message-passing layer to account for the contribution of the self-attributes themselves. The node features are iteratively transformed using the message passing and aggregation layers to arrive at the predictions. This can be compared to a CNN architecture where repeated convolutional layers are used to extract aggregated information from the images and further transformed into the prediction.

B. Quantum Graph Neural Networks

[4] One of the first mentions of quantum graph neural networks is the paper published by researchers at X, The Moonshot Factory. The authors proposed a new quantum neural network ansatz based on GNNs. The paper primarily deals with four applications, a) learning the Hamiltonian dynamics of a quantum system, given copies of an initial quantum state and the state at several randomly chosen times, the authors successfully predicted the parameters of the Hamiltonian. Secondly, to create a GHZ state on a quantum sensor network. Third, to find clusters in graph nodes, and Fourth, for graph isomorphism classification.

C. Quantum Machine Learning in Finance

Further, several attempts have been made to apply quantum algorithms including quantum machine learning to problems in the domain of finance. Use of amplitude estimation to estimate credit risk [5] has been proposed. The use of QAOA and VQE classes of algorithms has been proposed to optimize Markowitz Portfolio [6]. The use of parameterized quantum circuits(PQC) for forecasting finance time series [7] has been studied. The authors used time series components derived from AAPL stock and predicted $n + 1^{th}$ day based on previous n days of data. Forecasting stock prices is a challenging problem in finance. Apart from externalities, stock prices are also influenced by each other. Traditional analysis utilizes techniques like auto-regression techniques like ARMA and ARIMA, however, these techniques fail to capture the interdependence in stock prices. [8] proposed the use of a graph based model to forecast day-ahead prices, using historical price correlations to generate the graph connectivity. Ghosh [9] conducted an investigation into stock movements for S&P 500 stocks using LSTM and Random Forest Classifiers. Koa et al. [10], illustrated the application of forecasting prices to further use the predictions for Markowitz Portfolio optimization. Given the potential and importance of the problem along with the limitations of quantum computing we choose to tackle a milder version of the problem where we look to only predict the direction of the stock price movement.

III. Methodology

A. Graph Dataset

To illustrate the structure of a graph dataset as used in this work, we will use the Cora citation network dataset [11]. The dataset consists of an un-directed graph with 2,708 nodes and 10,556 edges. Each node further has 1,433 features and 7 labels. The features are bag of words representation representation of the key terms in the documents. Each of the 7 labels represents the class to which the node belongs. The finance time series graph dataset has been derived from a time-series data of NIFTY50 stocks, which represent the top 50 largest companies of the National Stock Exchange(NSE) based in Mumbai, India. We use historical correlation data to generate a graph by connecting highly correlated stocks with unweighted edges. Based on the average node degree we created three datasets, with high, low, and balanced node degrees. We study the effects of the node degree as it is directly related to the receptive field of a GNN; that is how many nodes are considered, each time the aggregation operation happens. Further, for prediction, we take n days data to forecast the direction of the stock on the $n+1^{th}$ day. In summary, our final graph dataset consists of 3 graphs with each graph having 49 nodes and k edges, and each node having n features and 1 label. All quantum circuits were simulated on the Pennylane [12] "Device Qubit" simulator which is a noiseless simulator. Pennylane allows a simple interface to pytorch which in turn is used by our chosen GNN library, pytorch geometric [13].

B. Architecture: Hybrid Quantum Classical GNN

We propose a novel hybrid Quantum-Classical graph neural network architecture. We use Parameterized Quantum Circuits as message-passing layers within the GNN framework. Thus, we keep the classical computation limited to aggregating the node information and computing the loss function. The network takes a graph such as the Cora dataset, encodes the data from each node to the quantum circuit, and computes the message for that node. Then messages from adjacent nodes

Authorized licensed use limited to: CBS Library. Downloaded on March 31,2026 at 19:55:41 UTC from IEEE Xplore. Restrictions apply.

are aggregated and passed back to the node. Consider a graph with k nodes and each node having n feature vectors given by,

$$\mathbf{x} = \{x_1^k, x_2^k, ..., x_n^k\} \tag{1}$$

Each of these nodes is encoded into the Hilbert space via an encoding scheme that applies a series of unitaries to the $|0\rangle$.

$$\psi_{encoded} = U(\mathbf{x})\,|0\rangle \tag{2}$$

The encoded state is transformed by quantum circuit layers which are parameterized by learnable parameters. Finally, the Pauli Z expectation value is measured.

$$\mathbf{h} = \langle\psi_{encoded}|U^{\dagger}(\theta)Z^{\otimes n}U(\theta)|\psi_{encoded}\rangle \tag{3}$$

After each iteration, the node feature vectors are updated,

$$h^l = W_{l-1}\sum_{n\in N(V)}\frac{h_n^{l-1}}{|N(v)|} + b_{l-1}h_V \tag{4}$$

C. Quantum Embedding

Quantum embedding maps the classical data to the Hilbert space. We use two of the commonly used schemes i.e. Amplitude Encoding and Angle encoding. Angle encoding encodes n variables to a 2^n dimensional space spanned by n qubits.

$$|\psi_{enc}\rangle = \frac{1}{|\mathbf{x}|}\prod_i R_X(x_i)^i\,|0\rangle \tag{5}$$

Amplitude encoding on the other hand maps 2^n features to each basis state thus resulting in the usage of exponentially less number of qubits.

$$|\psi_{enc}\rangle = \frac{1}{|\mathbf{x}|}\sum_i x_i\,|i\rangle \tag{6}$$

In case the number of features is less than 2^n the input must be padded in order to be encoded. In summary, angle encoding uses fewer gates and is a much more straightforward method, whereas amplitude encoding while using a higher depth of gates, can encode 2^n features. These considerations introduce an additional requirement for general datasets, one must reduce the number of dimensions to accommodate for limited number of qubits. We use two strategies for the same during the benchmark phase

- Introduce a classical layer in the first layer to map the data to lower dimensional space. This approach enables us to use angle encoding for embedding.
- Use principal component analysis(PCA) to reduce the number of features from 1,433 to 256. This is especially useful to test the Amplitude Encoding Approach.

However, for the financial time series data since the number of features is considerably less, we do not need to rely on any such dimensionality reduction techniques.

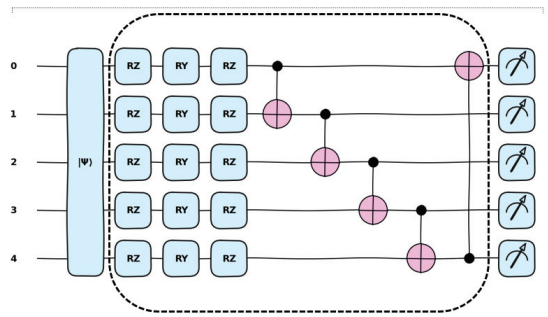

Fig. 2: Parametrized quantum circuit(Strong Entangled) used in this work. The operators inside the box are repeated n(number of layers) times. RX, RY, RZ are parametrized gates.

D. Quantum Circuit Ansatz

The choice of ansatz is important in parameterized quantum circuits. It is well known that certain ansatz designs can lead to barren plateaus as the number of qubits increases. We also want to use ansatze that are generalized enough to explore a large portion of the Hilbert space. We use two ansatz available in the Pennylane library, the strongly entangling layers,

$$U = R(\phi,\theta,\omega)^{\otimes n}CX_{ij} \tag{7}$$

$$i,j \in \{i,i+1\}\bigcup\{n,1\} \tag{8}$$

The number of parameters in each layer here is $n \times 3 \times repetitions$. and basic entangling layers,

$$U = RX(\phi)^{\otimes n}CX_{ij} \tag{9}$$

$$i,j \in \{i,i+1\}\bigcup\{n,1\} \tag{10}$$

These ansatz are data agnostic and have straightforward gradient computation rules [14]. Finally, we make measurements on the circuit in the computational basis and calculate the expected value of the Pauli Z operator.

E. Optimization

We use Adam Optimizer to optimize the parameters of the hybrid graph neural network. Cross-entropy loss is calculated for each batch and gradients with respect to both classical and quantum parameters are back-propagated.

IV. Results & Discussion

A. Benchmark on Cora Dataset

First, we train our model on the Cora Dataset, we use both amplitude encoding and angle encoding paradigms as discussed above. Our QGNN model consists of 3 Quantum Graph Convolution layers, where each layer consists of the parametrized quantum circuits with 10 repetitions of the circuit ansatz. This adds to a total of 90 learnable quantum parameters across 7 qubits in the circuit ansatz. In contrast, a classical GNN has 98 learnable parameters. Both of these counts are barring the parameters used in input mapping used for reducing the dimensionality. The results are summarized in I,

Authorized licensed use limited to: CBS Library. Downloaded on March 31,2026 at 19:55:41 UTC from IEEE Xplore. Restrictions apply.

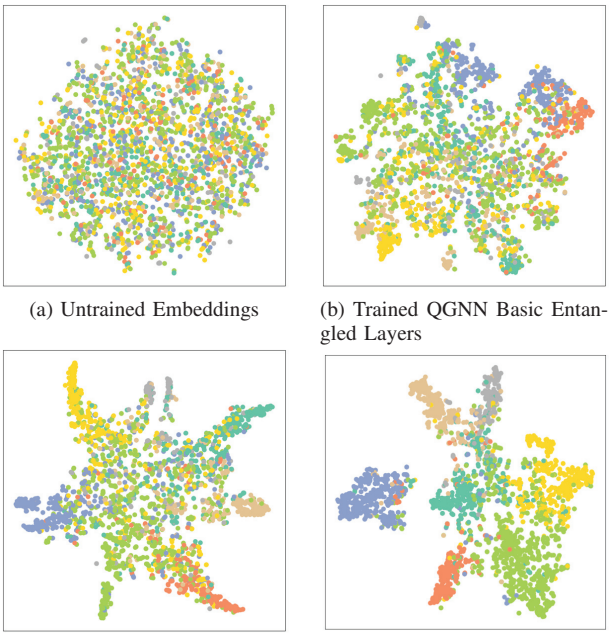

(a) Untrained Embeddings

(b) Trained QGNN Basic Entangled Layers

(c) Trained QGNN Model Fully Entangled Layers

(d) Trained Classical Model

Fig. 3: Visualization of embeddings generated by different variants of GNN

we note the cross-entropy Loss and the accuracy of the model. The results show that our proposed Hybrid QGNN architecture performs similar to the classical model of comparable size. However, a larger GNN model outperforms both of these models, suggesting that scalability is a challenge. To visualize the results we also plot the embeddings generated by the network projected onto 2-D space. The visualization clearly depicts the separation of classes.

B. Stock Movement Direction Prediction

We choose the best-performing quantum model and apply it to the NIFTY50 dataset. For comparison, we also evaluate the performance of classical models, apart from Graph Convolution Networks we also evaluate Xtreme Gradient Boosting as a baseline technique. The results are summarized in II. In contrast to our benchmark dataset, we do not find stark differences between the performances of classical and quantum models, infact the quantum-based model outperforms the classical models in terms of F1 score for sparse and balanced graph cases.

V. Conclusion and Future Prospects

We have developed and investigated the performance of Hybrid Classical Quantum Graph neural networks with focus on financial time series forecasting. We establish the viability of such designs, however several challenges that are common to such paradigms remain. The most profound one being mitigating challenges posed by barren plateaus that occur while optimizing circuits with large number of qubits. While we have presented the results for a relatively modest number of qubits, our preliminary investigations found that it becomes increasingly difficult to optimize the network for a higher number of qubits.

Further, we demonstrate the use of the same network to predict stock movement direction which presents itself as an ideal real-world application. We show that in problems with high uncertainties, the Hybrid model performs similar to classical models. This might be attributed to the fact that the Hybrid model does not overfit the data whereas the classical model would quickly look to overfit the data.

Acknowledgment

The authors acknowledge the support and resources provided by Fractal Analytics.

References

[1] M. Cerezo, G. Verdon, H.-Y. Huang, L. Cincio, and P. J. Coles, "Challenges and opportunities in quantum machine learning," *Nature Computational Science*, vol. 2, no. 9, pp. 567–576, 2022.

[2] Z. Wu, S. Pan, F. Chen, G. Long, C. Zhang, and S. Y. Philip, "A comprehensive survey on graph neural networks," *IEEE transactions on neural networks and learning systems*, vol. 32, no. 1, pp. 4–24, 2020.

[3] Q. T. Nguyen, L. Schatzki, P. Braccia, M. Ragone, P. J. Coles, F. Sauvage, M. Larocca, and M. Cerezo, "Theory for equivariant quantum neural networks," *arXiv preprint arXiv:2210.08566*, 2022.

[4] G. Verdon, T. McCourt, E. Luzhnica, V. Singh, S. Leichenauer, and J. Hidary, "Quantum graph neural networks," *arXiv preprint arXiv:1909.12264*, 2019.

[5] D. J. Egger, C. Gambella, J. Marecek, S. McFaddin, M. Mevissen, R. Raymond, A. Simonetto, S. Woerner, and E. Yndurain, "Quantum computing for finance: State-of-the-art and future prospects," *IEEE Transactions on Quantum Engineering*, vol. 1, pp. 1–24, 2020.

[6] M. Pistoia, S. F. Ahmad, A. Ajagekar, A. Buts, S. Chakrabarti, D. Herman, S. Hu, A. Jena, P. Minssen, P. Niroula *et al.*, "Quantum machine learning for finance iccad special session paper," in *2021 IEEE/ACM International Conference On Computer Aided Design (ICCAD)*. IEEE, 2021, pp. 1–9.

[7] D. Emmanoulopoulos and S. Dimoska, "Quantum machine learning in finance: Time series forecasting," *arXiv preprint arXiv:2202.00599*, 2022.

[8] W. Li, R. Bao, K. Harimoto, D. Chen, J. Xu, and Q. Su, "Modeling the stock relation with graph network for overnight stock movement prediction," in *Proceedings of the twenty-ninth international conference on international joint conferences on artificial intelligence*, 2021, pp. 4541–4547.

[9] P. Ghosh, A. Neufeld, and J. K. Sahoo, "Forecasting directional movements of stock prices for intraday trading using lstm and random forests," *Finance Research Letters*, vol. 46, p. 102280, 2022.

[10] K. J. Koa, Y. Ma, R. Ng, and T.-S. Chua, "Diffusion variational autoencoder for tackling stochasticity in multi-step regression stock price prediction," in *Proceedings of the 32nd ACM International Conference on Information and Knowledge Management*, 2023, pp. 1087–1096.

[11] Z. Yang, W. Cohen, and R. Salakhudinov, "Revisiting semi-supervised learning with graph embeddings," in *International conference on machine learning*. PMLR, 2016, pp. 40–48.

[12] V. Bergholm, J. Izaac, M. Schuld, C. Gogolin, S. Ahmed, V. Ajith, M. S. Alam, G. Alonso-Linaje, B. AkashNarayanan, A. Asadi, J. M. Arrazola, U. Azad, S. Banning, C. Blank, T. R. Bromley, B. A. Cordier, J. Ceroni, A. Delgado, O. D. Matteo, A. Dusko, T. Garg, D. Guala, A. Hayes, R. Hill, A. Ijaz, T. Isacsson, D. Ittah, S. Jahangiri, P. Jain, E. Jiang, A. Khandelwal, K. Kottmann, R. A. Lang, C. Lee, T. Loke, A. Lowe, K. McKiernan, J. J. Meyer, J. A. Montañez-Barrera, R. Moyard, Z. Niu, L. J. O'Riordan, S. Oud, A. Panigrahi, C.-Y. Park, D. Polatajko, N. Quesada, C. Roberts, N. Sá, I. Schoch,

Authorized licensed use limited to: CBS Library. Downloaded on March 31,2026 at 19:55:41 UTC from IEEE Xplore. Restrictions apply.

TABLE I: Comparison of classical and hybrid classical-quantum graph neural networks for Cora Dataset.

Model	Trainig Cross Entropy Loss	Test Accuracy
Random Baseline	1.3	14%
GCN h=5	1.6833	65.2%
GCN h=6	0.1966	79.0%
QGNN-Strongly Entangled Layers	1.4246	59.6%
QGNN-Simple Entangled Layers	1.520	45.5%
PCA Dataset		
GCN h=5	0.611	79.1 %
GCN h=6	0.5809	79.1%
QGNN Amplitude Encoding	0.8706	45.4%
QGNN-Strongly Entangled Layers	1.649	45.8%
QGNN-Simple Entangled Layers	1.5727	39.1%

TABLE II: Comparison of classical and hybrid classical-quantum graph neural networks for Stock Market Dataset.

Model	Cross Entropy Loss	F1 Score	roc auc Score
Sparse Graph			
XGBoost	0.2605	0.4851	0.4842
GCN h=5	1.5817	0.5787	0.480
QGNN-Strongly Entangled Layers	0.6649	0.5879	0.5385
QGNN-Simple Entangled Layers	0.6762	0.5817	0.4834
Balanced Graph			
XGBoost	0.2605	0.4851	0.4842
GCN h=5	8.8751	0.5630	0.49
QGNN-Strongly Entangled Layers	0.6788	0.5817	0.4959
QGNN-Simple Entangled Layers	0.6830	0.5783	0.4873
Dense Graph			
XGBoost	0.2605	0.4851	0.4842
GCN h=5	5.3250	0.5983	0.4811
QGNN-Strongly Entangled Layers	0.6490	0.5887	0.5302
QGNN-Simple Entangled Layers	0.6714	0.5681	0.4150

B. Shi, S. Shu, S. Sim, A. Singh, I. Strandberg, J. Soni, A. Száva, S. Thabet, R. A. Vargas-Hernández, T. Vincent, N. Vitucci, M. Weber, D. Wierichs, R. Wiersema, M. Willmann, V. Wong, S. Zhang, and N. Killoran, "Pennylane: Automatic differentiation of hybrid quantum-classical computations," 2022.

[13] M. Fey and J. E. Lenssen, "Fast graph representation learning with PyTorch Geometric," in *ICLR Workshop on Representation Learning on Graphs and Manifolds*, 2019.

[14] M. Schuld, A. Bocharov, K. M. Svore, and N. Wiebe, "Circuit-centric quantum classifiers," *Physical Review A*, vol. 101, no. 3, p. 032308, 2020.

Authorized licensed use limited to: CBS Library. Downloaded on March 31,2026 at 19:55:41 UTC from IEEE Xplore. Restrictions apply.