2021 IEEE 18th International Conference on Software Architecture Companion (ICSA-C) | 978-1-6654-3910-7/20/$31.00 ©2021 IEEE | DOI: 10.1109/ICSA-C52384.2021.00027

Hybrid Quantum Network for classification of finance and MNIST data

Gerhard Hellstern
Department of Business Economics and Centre of Digital Innovations
Cooperative State University Baden-Württemberg
Ravensburg, Germany
hellstern@dhbw-ravensburg.de

***Abstract*— In the ongoing era of noisy intermediate scaled quantum computers, one of the possible applications to search for an advantage of quantum computing is machine learning. Here we report about an approach, where a hybrid quantum-classical network is applied to classify non-trivial datasets (finance and MNIST data). In comparison to a pure classical network, we find an advantage when looking at several performance measures. However, as in classical machine learning problems around overfitting the dataset arise. Therefore, we outline the path to future research, which has to be done in the field of (hybrid) quantum networks.**

Keywords—Quantum Computing, Machine Learning, Tensorflow, Regularization, Finance, MNIST

I. Introduction

With the availability of quantum computers in the cloud around 2016, a race started towards suitable applications of this technology. While many people explore a potential quantum advantage in the areas of optimization and simulation, others focus on potential improvements of machine learning methods. Out of this, quantum machine learning (QML) emerged as an approach to combine classical machine learning ideas (e.g. deep neural nets) with the peculiarities of quantum computations - superposition and entanglement. From a technological point of view we are still in the NISQ-era [1], i.e., where only noisy intermediate scaled quantum computers are available. Although the number of qubits and the depth of possible circuits are limited, the promises of QML can be explored nevertheless.

In this conference contribution, we present a hybrid quantum network ansatz that is designed to classify non-trivial and/or more realistic datasets. "Realistic" data which appear in industrial or finance use cases tend to have many features, many observations and sometimes the target is unbalanced - one target event is more populated than the other(s). A second motivation of our work is to use a software framework, which is suitable not only for prototyping, but also for deploying hybrid quantum networks. One may think of a web or mobile app that includes a quantum algorithm as one of its components.

II. Supervised classification tasks with quantum computers

One large field of interest in the growing field of QML consists on the development of quantum classifiers: They are quantum algorithms (protocols) suitable for binary ore multiclass classification tasks, see e.g. [2], [3], [4]. For an extensive overview of the underlying methods and restrictions [5] and [6].

In many cases, the different approaches are demonstrated with very simple benchmark datasets: They have only two or three features and only a few training samples. Additionally, the approaches sometimes use only two or three qubits. Therefore, according to the existing literature, it is not obvious if and how a quantum classifier can be developed which is useful for datasets with

- Up to 1.000 features
- More than 1.000 training samples
- An unbalanced target (e.g., a binary classification where class 0 appears 90% in the training data and class 1 appears 10% in the training data).

Note, in typical industry use cases - e.g. in the finance sector - such conditions are usually met [7]. We believe that it is an important research topic to explore the scalability and deployment of quantum algorithms for such realistic datasets.

A common approach in QML for NISQ, which is also used in most of the mentioned papers above, is named "variational (or parametrized) quantum classifier" (VQC or PQC). The basic idea can be described as follows: First, the classical data have to be encoded as quantum states. For this task, a couple of different schemes were proposed: angle encoding, amplitude encoding, basic encoding etc. [5], [8]. Second, a unitary transformation with a number of learnable parameters is applied on the quantum states. Third, the qubits are measured and the measurement results are post-processed and fed into a classical loss function. Via a feedback loop, the learnable parameters of the unitary transformation are adjusted until the loss function is minimized. While the prescribed method is quite generic, different settings have been proposed and evaluated: Pros and cons of the encoding schemes, different unitary transformations with different depth of entanglement, different ways of measuring the qubits and finally different post-processing procedures, see e.g. [9], [10], [11].

The described generic VQC-ansatz however has one serious shortcoming: The number of qubits needed to encode the classical data with the prescribed methods scale with the number of features per sample. That means, if the classical data have e.g., one hundred features, roughly one hundred qubits would be needed which is out of scope of the quantum computers in the NISQ era. While in [12] an ansatz is developed which circumvent this problem via data re-uploading, in this contribution we propose a modified, hybrid ansatz, where the encoding is partially performed via a classical neural network. The neural network is used to scale down in a trainable way the number of features in the training

978-1-6654-3910-7/21/$31.00 ©2021 IEEE
DOI 10.1109/ICSA-C52384.2021.00027

Authorized licensed use limited to: CBS Library. Downloaded on March 31,2026 at 20:40:40 UTC from IEEE Xplore. Restrictions apply.

data to the parameters used in the quantum network. This hybrid network is schematically shown in Fig. 1 in the case of three qubits. To leverage this approach, we combine it with the data re-uploading idea of ref. [12]. Note, due to the classical networks in front and after the quantum network, the number of qubits can be chosen independently of the number of features and the number of output classes. In the last classical layer, a softmax activation function is used to feed the results of the network into the loss function.

In the most straightforward design, the structure of the encoding classical neural net is fully determined by the number of features and the number of qubits. It is possible to use more and/or hidden layers in the encoding network in a straightforward way. However, this would lead to a more difficult evaluation of the approach. Here we do not aim to find the "best" network, but to understand the interplay between the classical and the quantum part, so we stick to the straightforward design.

The quantum part of the network is constructed in the usual way and starts with all qubits in the |0> state. Then to each qubit i the transformation $R_y(\varphi_{i1})\, R_z\varphi_{i2})R_y\varphi_{i3})$ is applied. $R_y(..)$ and $R_z(..)$ denote a rotation gates around the y- and the z-axis, respectively. Note, the angles of the rotations, i.e. the φ_{ij}, are fed by the classical encoding network. The last step of the encoding part is to entangle pairs of qubits via CNOT-gates.

After the encoding part of the circuit, the variational part $\hat{U}(\phi_1,..,\phi_n)$ is applied. In the literature a couple of different approaches have been suggested, e.g. [3], [8], [11]. In this work, we use a parametrization, where to each qubit a combination of $R_y(..)\cdot R_z(..)\cdot R_z(..)$ gates and CNOT-gates to entangle pairs of qubits are applied. The number of parameters n of the variational part is given by $n = 3\cdot n_{qubits}\cdot n_{layers}$: For each qubit there are three parameters and the rotation-entanglement setup can be repeated n_{layers} times. We will distinguish two different approaches: In the first approach, the data is loaded once into the network and then the variational part is applied n_{layers} times. In the second approach, we implement the data-reuploading idea, suggested in ref. [12], i.e. together with the variational part, the data encoding circuit is repeated n_{layers} times, too.

In [13] a comparable but yet different hybrid learning approach has been proposed: In the spirit of transfer learning in a full-fledged classical deep learning model only the last layer is substituted with a quantum network. More in-line with our approach are the results in [14]: There, however the authors implement no entanglement between the qubits. However, generally it is expected that entanglement of qubits will improve the quality of QML. Furthermore, the authors do not use a second classical network to post-process the measurements, which leads to a lack of flexibility.

To evaluate the ability of our approach, denoted as "QNet" in the following, we compare the results with a fully classical neural net (denoted as "NNet") where the quantum network is substituted with one hidden layer. The number of neurons of the hidden layer are tuned to have an approximately equal number of parameters in both networks.

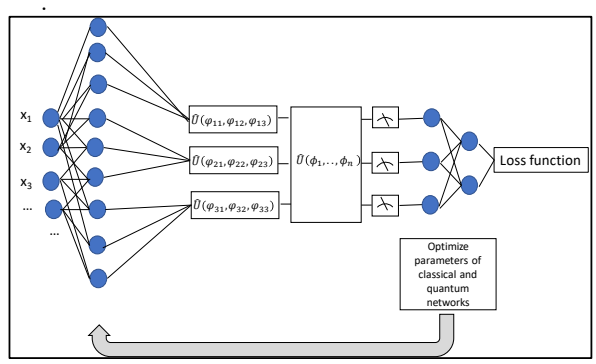

Fig. 1: Hybrid Classical Quantum Network

III. Choice of the Software Stack

An important part of our work is to explore and test different software stacks and select the best one for this approach. After examining the Qiskit [15] and the PennyLane [16] framework, we selected Google's TensorflowQuantum [17] for the following reasons: TensorflowQuantum is embedded in Google's AI ecosystem and allows a seamless training procedure of classical and quantum networks. Due to highly optimized interfaces to the underlying C++-libraries its performance allows to deal with the large datasets of our scope. Using TensorflowQuantum even large quantum circuits (e.g., 10 qubits and 10 layers) can be simulated on a notebook with 16 GByte memory and a Pentium i7 processor within a few hours. All reported results have been obtained with the ADAM-optimizer in tensorflow and a learning rate of 0.01. As loss function, we use categorical crossentropy.

Yet, up to now, Google provides only restrictive access to its quantum hardware; it is therefore at the moment hardly possible to leave the world of the quantum simulators. However, the findings obtained with TensorflowQuantum can be translated to other frameworks like Qiskit in cases where the deployment feature is less important.

IV. Results for a Finance Dataset

A. Balanced dataset – sample I

As a first use case, we show the results on a credit scoring dataset [18] with six features, scaled to the range of [0,1]. While in the full dataset the default rate is about 16.67%, we prepared a sample (in the following sample (I)) where the default rate was lifted to 50% in order to get a balanced dataset. The training data then consists of 340 observations. In a second sample (in the following sample (II)) we stick to the original unbalanced situation and work with 900 training cases.

In order to compare different classification algorithms, it is important to use appropriate measures and not only stick to one particular. Especially the commonly used accuracy (ACC) measure can be misleading in the case of unbalanced datasets. Additionally, in general, the accuracy depends on the cutoff value between the classes. Therefore, for binary classification we use the area under curve (AUC) as a second performance measure. As it is common practice in machine learning, we not only report on results on the training set but also on separated test data.

In Tab. 1, we report our results for a calculation with $n_{qubits}=n_{layers}=8$:

Authorized licensed use limited to: CBS Library. Downloaded on March 31,2026 at 20:40:40 UTC from IEEE Xplore. Restrictions apply.

TABLE I. RESULTS OF SAMPLE I

Network	ACC_{train}	AUC_{train}	ACC_{test}	AUC_{test}
QNet without data re-uploding)	0.68	0.74	0.59	0.65
QNet with data re-uploding)	0.78	0.86	0.68	0.72
Classical NNet	0.62	0.66	0.62	0.77

More important than the absolute value of the reported numbers are the relations between them. Lifting the absolute value would always be possible by tweaking the hyper-parameters (e.g. activation functions etc.) of the networks.

For this particular parameter set, some generic features appear which we also observed for other parameters (n_{qubits} and n_{layers}) and hyper-parameter sets:

- In comparison with a classical neural net with approximately the same number of parameters, the hybrid approach shows a better performance.
- Using data re-uploading is superior to an approach where only the variational part is repeated n_{layers} times.
- As in classical machine learning, overfitting can be observed when a trained network is applied to data not seen during training.

B. *Unbalanced dataset – sample II*

In Tab. 2, we report the results for sample II. To make the comparison easier, we stick to the same parameters, i.e. $n_{qubits}=n_{layers}=8$.

In this dataset, an accuracy of 0.83 would be obtained just by assigning all data points to the major class (the "non-defaulted" customers). For this reason, it is necessary to consider a second metric to evaluate different models: Although, the approaches with and without data re-uploading seem to be equal when considering just accuracy, the values for AUC are different.

As in sample I, it can be seen that overfitting the data is an issue, so one must think about proper regularization to keep the algorithm flexible enough to deal with unseen data.

V. RESULTS FOR THE MNIST DATASET

To test our approach for another non-trivial dataset we use the benchmark dataset MNIST [19]. It consists on a training set of 60.000 grey-scaled pictures of size 28x28 where each contains a hand-written number from 0 to 9. Additionally, there is a test set of 10.000 pictures.

In a brute force approach, handling 28x28=784 features with QML would be hardly possible since it requires 784

TABLE II. RESULTS OF SAMPLE II

Network	ACC_{train}	AUC_{train}	ACC_{test}	AUC_{test}
Quantum without data re-uploding)	0.84	0.72	0.83	0.55
Quantum with data re-uploding)	0.84	0.77	0.84	0.55
Classical NNet	0.83	0.66	0.83	0.51

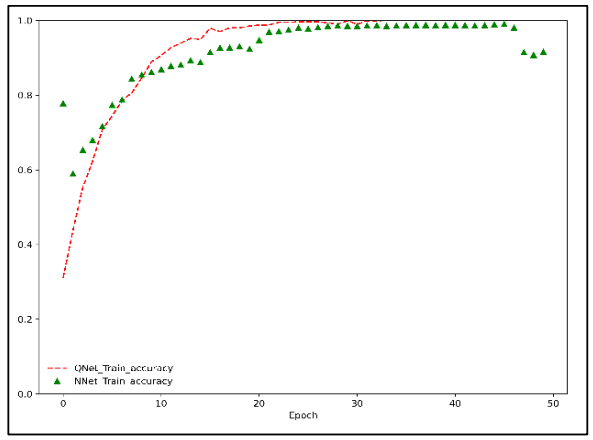

Fig. 2: Traning of the QNet compared to the NNet

qubits to encode the data, which is out of scope for NISQ devices. However, using a classical neural network in front of the quantum circuit allows downscaling the data to the number of available qubits. Of course, it is expected that the quality of the classification scales with the number of the qubits, so more available qubits would be better for the classification measures.

Classifying hand-written numbers for 0 to 9 is a multiclass classification problem with 10 labels. Solving such a problem from scratch would require to decide between a 'one-versus-one' and a 'one-versus-all' strategy. Within the tensorflow framework however switching between binary and multiclass classification is straightforward.

In our study, we choose a training set of 1.000 pictures and use the full out-of-sample test set of 10.000 pictures for evaluation. In order to judge the performance of the approach we plug in the same data into a classical network with the same number of parameters as described above.

As a first result, we show in Fig. 2 the comparison of the training process with the QNet and the NNet. It can be seen that the learning progress is much faster with the QNet. The same behavior is observed when comparing the results on the test data.

As a second result, we report the confusion matrix of the QNet for the training data, Fig. 3.

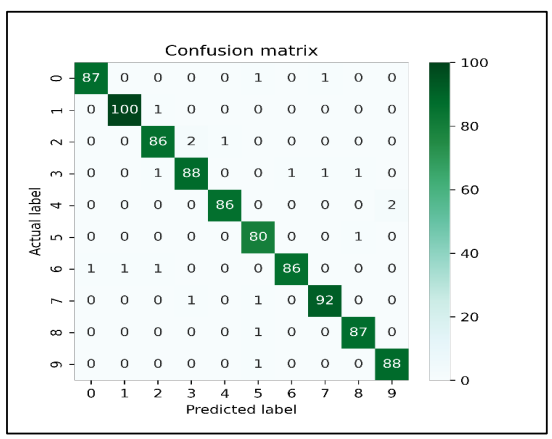

Fig. 3: QNet's confusion matrix on the training data

Authorized licensed use limited to: CBS Library. Downloaded on March 31,2026 at 20:40:40 UTC from IEEE Xplore. Restrictions apply.

When comparing the accuracy of the training set (ACC=0.98) with the accuracy of the test set (ACC=0.81), overfitting is detected. As in the case of the finance data the performance with the NNet (ACC=0.83 train and ACC=0.81 test) is slightly worse and shows less overfitting.

VI. Summary and Outlook

In this paper we introduce a hybrid quantum classical neural net for binary und multiclass classification. In order to allow a seamless interaction of the classical und the quantum part we use TensorflowQuantum. In this framework all the well-known tools of classical machine and deep learning are available to train and evaluate the networks. Furthermore, due to the embedding in Google's AI universe it allows in principle deployment even on mobile devices in the near future.

The hybrid quantum classical approach is built on the idea to squeeze a quantum network between two classical networks. The first network transforms the input data to suitable parameters of the quantum part. As it was shown, even high dimensional data as the MNIST dataset, where the number of features is of the order 10^3, can be handled. The classical output network is used for post-processing the measurements of the qubits and is finally connected to an appropriate loss function.

Due to the flexibility of the approach and its implementation with TensorflowQuantum, testing different encoding schemes and variational networks is straightforward.

In the case of the finance data set, we observe that the hybrid network performs slightly better when the classes are balanced. However, even in the unbalanced case, the network is able to distinguish default and non-default cases. When dealing with this data, we realized that it is important to use not only accuracy as the relevant performance measure, but also AUC. Furthermore, for this dataset the superiority of the data re-uploading approach has been demonstrated.

As a benchmark, we compared the results with a pure classical network, NNet, where the input and output layers are the same and the middle layer have the same number of parameters as the hybrid network QNet. In general, the performance of the QNet as measured in terms of ACC and AUC is in general better than that of the NNet.

For the MNIST dataset we were able to show that the convergence of the hybrid net to a certain level of accuracy is faster than in the classical case. Furthermore, the confusion matrix shows that the network is able to distinguish between the ten handwritten numbers.

These results – even though they are interesting for their own – provoke a number of questions which will be addressed as next steps in this project:

- As it is the case in classical machine learning, the suitability of a certain network depends on the specific data. Therefore, it is necessary to distinguish generic features of the hybrid network from data related features and understand how they are connected.
- The interdependence of the different performance measures for quantum classification have to be examined in more detail.
- The question how a quantum network can be regularized to avoid overfitting has to studied. Within our hybrid approach, a consistent regularization scheme of the classical and quantum part is be desirable and should be developed.
- While all calculations so far have been done on a simulator and therefore an ideal environment, it should be explored how realistic error rated on physical quantum devices affect the results.

Acknowledgment

Valuable discussions and support of M. Broughton (Google Research) about implementing the hybrid approach are gratefully acknowledged.

References

[1] J. Preskill, "Quantum computing in the NISQ era and beyond," Quantum 2, 79 (2018).

[2] E. Farhi and H. Neven, "Classification with quantum neural networks on near term processors," arXiv preprint arXiv:1802.06002 (2018).

[3] M. Schuld, A. Bocharov, K. M Svore, and N. Wiebe, "Circuit-centric quantum classifiers," Physical Review A 101, 032308 (2020).

[4] K. Mitarai, M. Negoro, M. Kitagawa, and K. Fujii, "Quantum circuit learning," Phys. Rev. A 98, 032309 (2018).

[5] F. Leymann and J. Barzen, The Bitter Truth, About Quantum Algorithms in the NISQ Era, arXiv preprint arXiv: 2006.02856 (2020).

[6] M. Cerezo, A. Arrasmith, R. Babbush, S. C. Benjamin,S. Endo, K. Fujii, J. R. McClean, K. Mitarai,X. Yuan,L. Cincio,P. J. Coles, Variational Quantum Algorithms, arXiv preprint arXiv: 2012.09265 (2020).

[7] R. Orus, S. Mugel, and E. Lizaso. Quantum computing for finance: Overview and prospects. Reviews in Physics, 4:100028, nov 2019. DOI: 10.1016/j.revip.2019.100028

[8] V. Havlíček, A. D Córcoles, K. Temme, A. W Harrow, A. Kandala, J. M Chow, and J. M Gambetta, "Supervised learning with quantum-enhanced feature spaces," Nature 567, 209–212 (2019).

[9] M. Schuld and N. Killoran, "Quantum machine learning in feature hilbert spaces," Physical Review Letters 122, 040504 (2019).

[10] S. Sim, P. D Johnson, and A. Aspuru-Guzik, "Expressibility and entangling capability of parameterized quantum circuits for hybrid quantum-classical algorithms," Advanced Quantum Technologies 2, 1900070 (2019).

[11] T. Suzuki and M. Katouda, Predicting Toxicity by Quantum Machine Learning, arXiv preprint arXiv:2008.07715 (2020)

[12] A. Perez-Salinas, A. Cervera-Lierta, E. Gil-Fuster, and J. I. Latorre, Data re-uploading for a universal quantum classifier, Quantum 4, 226 (2020).

[13] A. Mari, T. R. Bromley, J. Izaac, M. Schuld, and N. Killoran, Transfer learning in hybrid classical-quantum neural networks, arXiv preprint arXiv:1912.08278 (2019).

[14] S. Kumar, S. Dangwal and D. Bhowmiky, Supervised Learning Using a Dressed Quantum Network with Super Compressed Encoding: Algorithm and Quantum-Hardware-Based Implementation, arXiv preprint arXiv: 2007.10242 (2020).

[15] H. Abraham et al, Qiskit: An Open-source Framework for Quantum Computing (2019).

[16] V. Bergholm et al, PennyLane: Automatic differentiation of hybrid quantum-classical computations, arXiv preprint arXiv:1811.04968 (2018).

[17] M. Broughton, G. Verdon, T. McCourt, A. J. Martinez, J. H. Yoo, S. V. Isakov, P. Massey, M. Y. Niu, R. Halavati, E. Peters et al., "Tensorflow quantum: A software framework for quantum machine learning," arXiv preprint arXiv:2003.02989 (2020).

[18] https://www.kaggle.com/wordsforthewise/lending-club

[19] Y. LeCun, L. Bottou, Y. Bengio, and P. Haffner. "Gradient-based learning applied to document recognition." Proceedings of the IEEE, 86(11):2278-2324, November 1998.

Authorized licensed use limited to: CBS Library. Downloaded on March 31,2026 at 20:40:40 UTC from IEEE Xplore. Restrictions apply.