Quantum Gated Recurrent Neural Networks

Yanan Li, Zhimin Wang, Ruipeng Xing, Changheng Shao, Shangshang Shi, Jiaxin Li, Guoqiang Zhong, *Member, IEEE*, and Yongjian Gu

***Abstract*—The exploration of quantum advantages with Quantum Neural Networks (QNNs) is an exciting endeavor. Recurrent neural networks, the widely used framework in deep learning, suffer from the gradient vanishing and exploding problem, which limits their ability to learn long-term dependencies. To address this challenge, in this work, we develop the sequential model of Quantum Gated Recurrent Neural Networks (QGRNNs). This model naturally integrates the gating mechanism into the framework of the variational ansatz circuit of QNNs, enabling efficient execution on near-term quantum devices. We present rigorous proof that QGRNNs can preserve the gradient norm of long-term interactions throughout the recurrent network, enabling efficient learning of long-term dependencies. Meanwhile, the architectural features of QGRNNs can effectively mitigate the barren plateau phenomenon. The effectiveness of QGRNNs in sequential learning is convincingly demonstrated through various typical tasks, including solving the adding problem, learning gene regulatory networks, and predicting stock prices. The hardware-efficient architecture and superior performance of our QGRNNs indicate their promising potential for finding quantum advantageous applications in the near term.**

***Index Terms*—Quantum neural networks, recurrent neural networks, gating mechanism, gradient vanishing and exploding, stock price prediction.**

I. Introduction

RECURRENT Neural Networks (RNNs) are the foundation of a multitude of deep learning models designed for sequential learning tasks [1]. With an architecture consisting of multiple recurrent blocks, RNNs can easily scale with the length of the sequence, making them practical for processing sequences of variable length [2]. In theory, RNNs possess the capability to capture any long-term dependencies present in sequential data by leveraging the recurrent connections between blocks. However, optimizing RNNs with long-term interactions poses significant challenges due to the well-studied issue of vanishing and exploding gradient [3], [4], [5].

While still in its early stages, quantum machine learning has sparked significant interest in exploring advanced machine learning models that have the potential for quantum speedup [6], [7], [8]. One of the most promising areas is Quantum Neural Networks (QNNs) [9], [10], [11], [12], [13], which leverage the exponentially large Hilbert space to map data features and can be implemented on near-term Noisy Intermediate-Scale Quantum (NISQ) devices [14], [15]. There is a growing consensus that QNNs may achieve advantageous applications based on NISQ devices. However, developing the model of QNNs also encounters challenges, such as the barren plateau problem [16], [17], [18] and concerns regarding hardware efficiency [19].

QNNs have been tailored to develop the sequence model of Quantum Recurrent Neural Networks (QRNNs) [20], [21], [22], [23], [24], aiming to address the challenge of gradient vanishing and exploding. The fundamental idea is rooted in leveraging the inherent unitary nature of transformations in QNNs to preserve the magnitude of gradients in the context of long-term interactions. However, it is worth noting that the gradient vanishing and exploding problem in QRNNs exhibits substantial differences compared to that found in classical RNNs.

In classical RNNs, the gradient vanishing and exploding problem refers to a phenomenon where the gradient of long-term interactions tends to have an exponentially smaller (vanishing) or larger (exploding) magnitude compared to that of short-term interactions. Especially, in cases of gradient vanishing, even though the gradient value itself may not be small, it is primarily influenced by short-term interactions, resulting in a very long time to learn long-term dependencies [2]. For QRNNs, in addition to addressing this long-term dependency problem, they also need to consider the barren plateau problem, where the gradient of a variational quantum ansatz circuit vanishes exponentially with an increasing number of qubits and circuit depth [17].

Although various models of QRNNs have been proposed [20], [21], [22], [23], [24], there still remains a significant gap in whether QRNNs can effectively address the challenges posed by long-term dependencies and barren plateau.

In this paper, we advance the model of QRNNs by introducing a gating mechanism into the framework of QNNs, thereby establishing the architecture of Quantum Gated Recurrent Neural Networks (QGRNNs). We present a rigorous proof that QGRNNs are capable of maintaining the gradient norm of long-term

Received 6 December 2023; revised 19 September 2024; accepted 15 December 2024. Date of publication 18 December 2024; date of current version 6 March 2025. This work was supported in part by the Natural Science Foundation of Shandong Province of China under Grant ZR2021ZD19 and in part by the National Natural Science Foundation of China under Grant 12005212. Recommended for acceptance by I.A. Kakadiaris. *(Yanan Li and Zhimin Wang are Co-first authors.) (Corresponding authors: Zhimin Wang; Yongjian Gu.)*

Yanan Li, Ruipeng Xing, Shangshang Shi, and Jiaxin Li are with the College of Physics and Optoelectronic Engineering, Ocean University of China, Qingdao 266100, China.

Zhimin Wang and Yongjian Gu are with the College of Physics and Optoelectronic Engineering, Ocean University of China, Qingdao 266100, China, and also with Engineering Research Center of Advanced Marine Physical Instruments and Equipment of Ministry of Education, Ocean University of China, Qingdao 266100, China (e-mail: wangzhimin@ouc.edu.cn; yjgu@ouc.edu.cn).

Changheng Shao is with the College of Computer Science and Technology, Qingdao University, Qingdao 266071, China.

Guoqiang Zhong is with the College of Computer Science and Technology, Ocean University of China, Qingdao 266100, China.

This article has supplementary downloadable material available at https://doi.org/10.1109/TPAMI.2024.3519605, provided by the authors.

Digital Object Identifier 10.1109/TPAMI.2024.3519605

0162-8828 © 2024 IEEE. All rights reserved, including rights for text and data mining, and training of artificial intelligence and similar technologies. Personal use is permitted, but republication/redistribution requires IEEE permission. See https://www.ieee.org/publications/rights/index.html for more information.

Authorized licensed use limited to: CBS Library. Downloaded on March 31,2026 at 20:54:35 UTC from IEEE Xplore. Restrictions apply.

interactions, facilitating efficient learning of long-term dependencies. Furthermore, the architectural features of QGRNNs can effectively alleviate the barren plateau phenomenon.

Our QGRNNs distinguish themselves from their predecessors in several aspects:

First, the QRNN model introduced in [20] is constructed using the repeat-until-success quantum neuron in conjunction with quantum amplitude amplification as a building block. This approach results in a complex circuit that is unsuitable for near-term NISQ devices. In contrast, our QGRNNs are entirely based on hardware-efficient ansatz circuits, which can be customized to match the specific configurations of available quantum hardware, thus enabling their efficient execution on NISQ devices.

Second, the QRNN models proposed in [21], [22] utilize random quantum circuits for their recurrent cells, which are prone to encountering the barren plateau phenomenon. In contrast, our QGRNNs feature highly-structured cells, with an architecture inspired by the gating mechanism of Long Short-Term Memory (LSTM) and Gated Recurrent Unit (GRU) models. We demonstrate that QGRNNs are capable of effectively addressing the barren plateau challenge due to the architectural features.

Third, the QRNN models developed in [23], [24] adopt a hybrid quantum-classical architecture, where only the feedforward layers of classical LSTM and GRU models are replaced with a quantum ansatz circuit, while the rest remains unchanged. Such hybrid models often encounter challenges related to interfacing between quantum and classical systems [25]. In contrast, our QGRNNs are fully quantum parameterized, with the gating mechanism achieved through the quantum state evolution within the ansatz circuit. This approach aligns with the methodology employed by Cong et al. in their development of Quantum Convolutional Neural Networks (QCNNs) [26].

The performance of our QGRNNs in sequential learning is demonstrated through various typical tasks, including the adding problem, learning gene regulatory networks, and predicting market prices. In particular, stock prices are dynamically determined by the intricate interplay of macroeconomic and microeconomic factors [27], resulting in data characterized by high volatility, noise, and nonlinearity. Therefore, the exceptional performance of QGRNNs in predicting stock prices provides a convincing evaluation of its ability to capture nonlinear patterns and learn long-term dependencies within a sequence.

The main contributions of this work are as follows:

1) We propose a novel approach to integrating the gating mechanism into the architecture of QNNs, leading to the development of QGRNNs model. QGRNNs are fully quantum-parameterized and employ hardware-efficient ansatz circuits, enabling their efficient execution on near-term NISQ devices.
2) We provide rigorous proof that QGRNNs are capable of preserving the gradient norm of long-term interactions, thereby enabling their efficient learning of long-term dependencies. Moreover, the architectural features of QGRNNs can effectively mitigate the barren plateau phenomenon. Therefore, QGRNNs can effectively address the challenges of gradient vanishing and exploding encountered by RNN and QNN models.
3) The effectiveness of QGRNNs in sequential learning is convincingly demonstrated through various typical tasks. Particularly, QGRNNs achieve superior performance in predicting stock prices with significantly fewer parameters, outperforming both deep QNNs and classical gated RNN models.

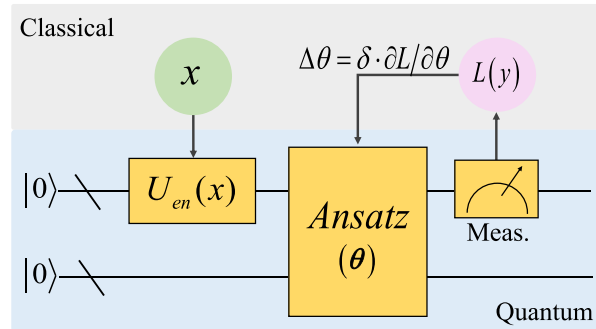

Fig. 1. The hybrid system of QNNs. The date encoding circuit U_{en}, quantum ansatz circuit, and measurement are executed on a quantum computer, while the parameter optimization is carried out on a classical computer.

The remainder of this paper is structured as follows. Section II briefly reviews the fundamental concepts related to QNNs and classical gated RNNs. Section III delves into the details of the architecture of QGRNNs. In Section IV, we showcase the performance of QGRNNs on various tasks, including the adding problem, learning gene regulatory networks, and predicting market prices, as well as their robustness against quantum noise. Finally, Section V concludes our work.

II. Preliminaries

A. Quantum Neural Networks

QNNs are a class of NISQ algorithms designed to exploit the limited quantum resources currently available to tackle computational tasks that are challenging for classical computers [28]. QNNs utilize a hybrid system, which employs a variational quantum ansatz as the machine learning model and a classical optimizer to learn the parameters of the ansatz [12]. The framework of QNNs typically consists of four primary components: data encoder, ansatz, quantum measurement, and parameter optimization routine, as shown in Fig. 1.

The data encoder is responsible for embedding classical data into quantum states, which involves performing the transformation $|x\rangle = U_{en}|0\rangle^{\otimes n}$. Data encoding essentially serves as a feature mapping process, where data features are represented within an exponentially large Hilbert space, which would be computationally intractable for classical computers [29], [30]. Encoding classical data into quantum states is far from straightforward; it requires careful design, taking into account both the circuit complexity and its impact on the model's performance [31].

The ansatz is a quantum analogue of a classical feedforward neural network. Its function is to process the features produced by the encoder circuit and yield new features for final

Authorized licensed use limited to: CBS Library. Downloaded on March 31,2026 at 20:54:35 UTC from IEEE Xplore. Restrictions apply.

measurement. This is accomplished through the parameterized quantum circuit (PQC), which has adjustable quantum gates. Theoretically, an ansatz circuit with a polynomial number of quantum gates (i.e., a polynomial number of parameters) possesses the ability to approximate any target function [32]. In other words, the ansatz can efficiently generate the hypothesis space for the learning task [33].

Quantum measurement is employed to extract information from the quantum system, and the resulting data is then processed to formulate a loss function for optimizing the ansatz circuit. The measurement operation corresponds to a physical observable M with the eigenvalue decomposition $M = \sum_i \lambda_i |i\rangle\langle i|$. The fundamental outcomes of the measurement include the probabilities of the final state collapsing to the eigenstates $|i\rangle$ and the expectation value of their corresponding eigenvalues λ_i.

The parameter optimization routine is executed on classical computers to optimize the parameters of the ansatz circuit. Typically, gradient-based approaches are utilized to adjust the parameters. The derivatives of the parameters with respect to the loss function are computed on the quantum computer. Once the gradients are obtained, commonly used optimizers from classical neural networks, such as SGD and Adam, can be employed to update the parameters.

B. Gated Recurrent Neural Networks

RNNs have a multi-layered architecture, where each layer consists of fundamental recurrent blocks known as cells. These cells are interconnected through recurrent connections, enabling the predictions of RNNs at any given time step to be influenced by both new input data and historical information from preceding sequence elements. Moreover, the number of cells can be adjusted to match the sequence length, making RNNs adept at processing sequences of variable length.

The architectural design of the RNN cell varies significantly, leading to numerous variants. Among these, the most renowned are the LSTM and GRU models [3], [34], which employ the gating mechanism. This mechanism regulates the information flow within the recurrent cell, achieving a balance between retaining historical information and assimilating new inputs. The gated RNN models have proven to be effective in mitigating the gradient vanishing and exploding issue, thereby enhancing the learning of long-term dependencies [34].

The cell structures of LSTM and GRU are depicted schematically in Fig. 2. The LSTM cell utilizes three gates: the input gate i_t, the forget gate f_t, and the output gate o_t. These gates are calculated as follows:

$$\begin{aligned} i_t &= \sigma\left(W_i \cdot [h_{t-1}, x_t]\right), \\ f_t &= \sigma\left(W_f \cdot [h_{t-1}, x_t]\right), \\ o_t &= \sigma\left(W_o \cdot [h_{t-1}, x_t]\right). \end{aligned} \tag{1}$$

In this equation, W represents the weight matrix (including bias parameters), σ denotes the sigmoid function, and x_t and h_{t-1} represent the input data and hidden state at time steps t and $t-1$,

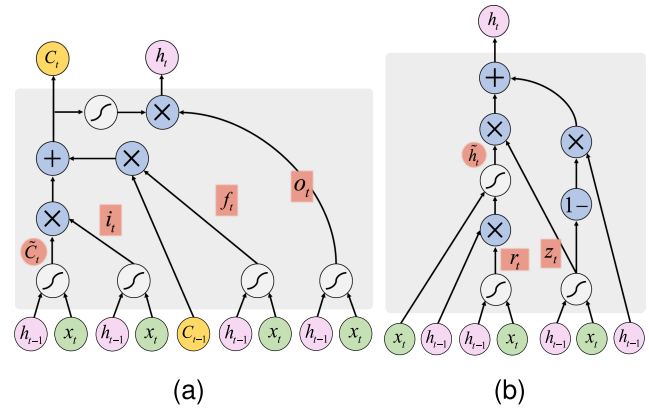

Fig. 2. Illustration of the gating mechanism in (a) the LSTM cell and (b) the GRU cell (excluding the output state for simplicity).

respectively. Additionally, the LSTM cell generates two types of intermediate states: the cell state C_t and the hidden state h_t, which are computed as follows:

$$\begin{aligned} C_t &= f_t \cdot C_{t-1} + i_t \cdot \tilde{C}_t, \\ h_t &= o_t \cdot tanh(C_t), \end{aligned} \tag{2}$$

where $\tilde{C}_t$ represents the input feature calculated by $\tilde{C}_t = tanh(W_c \cdot [h_{t-1}, x_t])$.

GRU is a simplified version of LSTM. The GRU cell uses two gates, the update gate z_t and the reset gate r_t, which are calculated as follows:

$$\begin{aligned} z_t &= \sigma\left(W_z \cdot [h_{t-1}, x_t]\right), \\ r_t &= \sigma\left(W_r \cdot [h_{t-1}, x_t]\right). \end{aligned} \tag{3}$$

The GRU cell produces only one intermediate state, i.e., the hidden state, as follows:

$$h_t = (1 - z_t) \cdot h_{t-1} + z_t \cdot \tilde{h}_t, \tag{4}$$

where $\tilde{h}_t$ also represents the input feature calculated by $\tilde{h}_t = tanh(W_h \cdot [r_t \cdot h_{t-1}, x_t])$. The reset gate r_t in $\tilde{h}_t$ is used to introduce an additional nonlinear effect in the relationship between the past state and the future state. Note that in both LSTM and GRU cells, the output state can be calculated, if necessary, by $y_t = \sigma(W_y \cdot h_t)$.

As seen from (2) and 4, the GRU cell uses a single update gate z_t to fulfill a similar role as the two gates in LSTM, namely the input gate i_t and forget gate f_t. Hence, the GRU cell involves fewer parameters than LSTM, which theoretically allows for more efficient training of GRU networks. However, both LSTM and GRU models have empirically demonstrated their superior performance in various applications, making them both widely used in the field of deep learning. Therefore, in this study, we construct the QGRNN cell based on both LSTM and GRU gating mechanisms.

Authorized licensed use limited to: CBS Library. Downloaded on March 31,2026 at 20:54:35 UTC from IEEE Xplore. Restrictions apply.

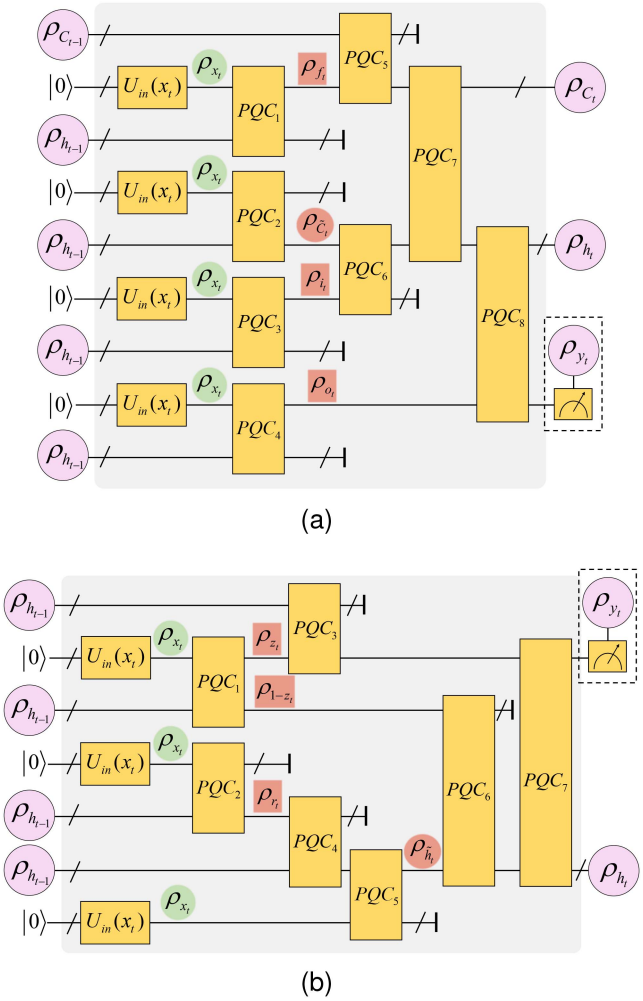

Fig. 3. Two structures of the QGRNN cell: (a) the QLSTM cell and (b) the QGRU cell, which are inspired by the structural features of the LSTM and GRU cell, respectively. $U_{in}(x)$ and PQC denote the data encoding and parameterized quantum circuits, respectively. Depending on the specific learning task at hand, the dashed box may be utilized as necessary.

III. Details of the QGRNNs

A. Two Structures of the QGRNN Cell

Building upon the gating mechanism of LSTM and GRU cells, we propose two corresponding QGRNN cells, namely the QLSTM and QGRU cell, as illustrated in Fig. 3. The fundamental insight is that all the gates in LSTM and GRU are actually implemented using an identical sigmoid-linear unit, as shown in (1) and 3. In the context of QNNs, such a unit can be implemented through the mid-circuit measurement operation.

Specifically, the gates in the QGRNN cells are generated through the following quantum state evolution, expressed in the density matrix formalism:

$$\rho_{gate} = \mathrm{tr_p}\left[U \cdot (\rho_{x_t} \otimes \rho_{h_{t-1}}) \cdot U^{\dagger}\right], \tag{5}$$

where ρ_{gate}, ρ_{x_t}, and $\rho_{h_{t-1}}$ represent the density matrices of the gates, input, and hidden state, respectively; $\mathrm{tr_p}$ denotes the partial trace over the register accommodating ρ_{x_t}; and U represents the circuit transformation of the PQC. As shown in (5), the gates in the QGRNN cells are derived from a subset of qubits within the register that encodes both the historical data h_{t-1} and the new input x_t. This approach to computing gates is purely quantum, where all information is initially entangled in the quantum state, and then the desired information is coherently amplified in designated dimensions. Here, the optimal projection is learned by the variational circuit.

For ease of understanding, the density matrices of gates in QGRNN, namely $\rho_{i_t}, \rho_{f_t}, \rho_{o_t}, \rho_{r_t}$, and ρ_{z_t}, as well as the density matrices of input features, $\rho_{\tilde{C}_t}$ and $\rho_{\tilde{h}_t}$, are labeled in Fig. 3. Moreover, the circuit blocks that implement (5) to generate these gates and input features are clearly displayed in Fig. 3. It's worth noting that in the QGRU cell, the gate ρ_{1-z_t} is implemented as the complement of ρ_{z_t}. These blocks share a similar circuit structure but differ in their parameterization within the PQCs, which resembles the methodology used by LSTM and GRU to compute their gates and input features.

Based on the density matrices of the respective gates, the density matrices of the cell state in QLSTM and the hidden state in QGRU are generated through the following quantum state evolution process:

$$\begin{aligned}\rho_{C_t} = \mathrm{tr_p}\big[U \cdot \big(&\mathrm{tr_p}\left[U \cdot (\rho_{C_{t-1}} \otimes \rho_{f_t}) \cdot U^{\dagger}\right] \\ &\otimes \mathrm{tr_p}\left[U \cdot (\rho_{\tilde{C}_t} \otimes \rho_{f_t}) \cdot U^{\dagger}\right]\big) \cdot U^{\dagger}\big],\end{aligned} \tag{6}$$

$$\begin{aligned}\rho_{h_t} = \mathrm{tr_p}\big[U \cdot \big(&\mathrm{tr_p}\left[U \cdot (\rho_{h_{t-1}} \otimes \rho_{z_t}) \cdot U^{\dagger}\right] \\ &\otimes \mathrm{tr_p}\left[U \cdot \left(\rho_{\rho_{1-z_t} \otimes \tilde{h}_t}\right) \cdot U^{\dagger}\right]\big) \cdot U^{\dagger}\big].\end{aligned} \tag{7}$$

The circuit blocks responsible for implementing (6) and 7 are clearly depicted in Fig. 3. As seen from these equations, within the ansatz circuit of QGRNN, the flow of information from ρ_{x_t} and $\rho_{h_{t-1}}$ to ρ_{h_t} and ρ_{C_t} is controlled by the gating units, and the PQCs are trained to achieve an optimal balance between the historical information and the new input. This highly structured QGRNN cell can not only effectively model long-term dependencies within sequences but also mitigate the barren plateau problem, which will be further discussed in subsequent sections.

Now, we discuss the implementation details of each component of the QGRNN cell circuit. The input data x_t can be embedded into a quantum state ρ_{x_t} using either amplitude encoding or circuit encoding, depending on the requirements for the qubit complexity and operation complexity. Specifically, amplitude encoding is qubit-efficient, as it utilizes n qubits to encode 2^n data elements, i.e., $U_{in}(x)|0\rangle^{\otimes n} = \sum_{i=1}^{2^n} x_i|i\rangle$. On the other hand, circuit encoding is operation-efficient; it embeds N data elements using N native gates, e.g., $U_{in}(x) = \prod_{i=1}^{N} R_{\sigma}(x_i)W_i$, where R_{σ} represents a single-qubit rotation gate and W_i is a constant two-qubit gate. In practical applications, the encoding circuits employed in specific QGRNN cells should undergo pre-testing based on the learning task at hand.

All PQCs used in the QGRNN cell possess a fixed and identified structure. These PQCs must be both expressive for unitary transformations and hardware-efficient for execution on NISQ devices. A range of alternative circuits, each with unique properties in terms of expressibility, entangling capability, and circuit complexity, are available in the literature [35]. Typically,

Authorized licensed use limited to: CBS Library. Downloaded on March 31,2026 at 20:54:35 UTC from IEEE Xplore. Restrictions apply.

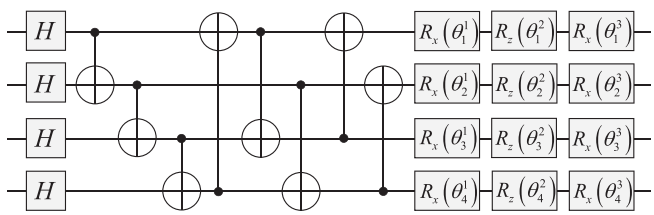

Fig. 4. An example circuit of a PQC with four qubits. This circuit consists of single-qubit Hadamard, R_x, and R_z gates and two-qubit CNOT gate. This circuit is adapted from [23].

a PQC consists of layers of single- and two-qubit gates, selected based on the native gate set provided by the available quantum devices. Additionally, the configuration of two-qubit gates is determined by the qubit topologies of the devices, including nearest-neighbor, circuit-block, and all-to-all structures [35]. An example circuit for a four-qubit PQC is depicted in Fig. 4 [23], which will be employed in subsequent numerical experiments.

The measurement in the QGRNN cell is performed to generate a prediction for the current time-step in the sequence. For certain learning tasks, such as text classification, only one measurement operation needs to be performed in the final cell. The commonly used measurement in quantum computing is the computational basis measurement, namely the Pauli-Z measurement with the observable $\sigma_z = (+1)|0\rangle\langle 0| + (-1)|1\rangle\langle 1|$. For the density matrix of the output state ρ_{y_t}, the probability of the states collapsing to the eigenstates $|i\rangle$ is $p_i = \mathrm{tr}(P_i \rho_{y_t})$ with $P_i = |i\rangle\langle i|$, and the expectation value of the eigenvalues is $\langle M\rangle = \mathrm{tr}(\sigma_z \rho_{y_t})$. The probabilities p_i and the expectation value $\langle M\rangle$ are utilized to compute the loss function and optimize the ansatz parameters.

B. Network Architecture of QGRNNs

Once the recurrent cells are established, QGRNNs can be constructed by arranging these cells sequentially. Fig. 5 illustrates how two QLSTM cells are interconnected. It is worth noting that a LSTM cell requires four inputs ρ_{h_t}; however, due to the quantum no-cloning principle, the hidden state from the previous time step cannot be replicated four times. To overcome this obstacle, as shown in Fig. 5, the qubit register that outputs the hidden state from the previous cell is divided into four segments, with each segment serving as an input ρ_{h_t} for the subsequent cell. In this scenario, even though these four inputs ρ_{h_t} are not identical, they all carry similar historical information because they are produced as an entangled state. The approach for connecting QGRU cells is similar to that of QLSTM.

Considering the constraints of current quantum devices, further refinement of the architecture of QGRNNs is necessary. Specifically, in the architecture depicted in Fig. 5, the fifth quantum register, which holds the second $\rho_{h_{t-1}}$ state, must remain constantly operational, demanding quantum device with a long coherent time. Conversely, other registers, including those housing the remaining three $\rho_{h_{t-1}}$ states, are halted midway in the cell and can be reinitialized for reuse. To address this imbalance, the four segments of ρ_{h_t} should be allocated in a staggered manner, ensuring that each register has an opportunity to cease operation and reinitialize after a few time steps [21]. This strategy can significantly reduce the coherent time requirement for quantum hardware, thereby making QGRNNs more accessible on near-term quantum devices.

C. Gradient Properties of QGRNNs

In contrast to classical RNN models, the gradient vanishing and exploding issue in QRNNs encompasses two distinct aspects. The first aspect relates to the long-term dependency challenge encountered by classical RNN models, where the magnitude of the gradient for long-term interactions tends to exponentially decrease or increase compared to that of short-term interactions. Specifically, considering the hidden states h_T and h_t at time steps T and t, the norm of the Jacobian matrix $\|\frac{\partial h_T}{\partial h_t}\|$ tends to vanish or explode when $T \gg t$.

The second aspect pertains to the barren plateau challenge encountered by QNN models, where the cost function gradients of a randomly initialized ansatz vanish exponentially with the number of qubits and the circuit depth. This challenge is inherently attributed to the 2-design characteristic of random circuits employed in the QNN ansatz. It has been shown that the barren plateau is closely related to the specific architecture of QNN models [18], [36].

Our QGRNNs can effectively address the above two challenges. First, we prove that the gradient norm of long-term interactions throughout the QGRNN network is preserved. Here, we provide a brief outline of the proof, while detailed information can be found in the Supplementary Material (Section I). As depicted in Fig. 5, the intermediate state at step $t+1$, which comprises both the cell state and hidden state, $\rho_{Ch_{t+1}} = \rho_{C_{t+1}} \otimes \rho_{h_{t+1}}$, is obtained through the following evolution:

$$\rho_{Ch_{t+1}} = \mathrm{tr_p}\left[U \cdot \left(\rho_{x_{t+1}} \otimes \rho_{Ch_t}\right) \cdot U^\dagger\right], \tag{8}$$

where U represents the unitary transformation implemented by the QGRNN cell circuit, and $\mathrm{tr_p}$ denotes the partial trace over the remaining system except for ρ_{Ch_t}. Furthermore, the relationship between intermediate states ρ_{Ch_T} and ρ_{Ch_t} at time steps T and t, respectively (with $T > t$), can be expressed as:

$$\begin{aligned}\rho_{Ch_T} = \mathrm{tr_p}\big[U \cdot \big(\rho_{x_T} \otimes \big(\cdots \mathrm{tr_p}\big[U \cdot \big(\rho_{x_{t+2}} \otimes \\ \big(\mathrm{tr_p}\left[U \cdot \left(\rho_{x_{t+1}} \otimes \rho_{Ch_t}\right) \cdot U^\dagger\right]\big)\big) \cdot U^\dagger\big] \cdots\big)\big) \cdot U^\dagger\big].\end{aligned} \tag{9}$$

Using the differential rules for matrix functions [37], the Jacobian between ρ_{Ch_T} and ρ_{Ch_t} in (9) is given by:

$$\begin{aligned}&\frac{\partial \rho_{Ch_T}}{\partial \rho_{Ch_t}} \\ &= \mathrm{tr_p}\big[U \cdot \big(\rho_{x_T} \otimes \big(\cdots \mathrm{tr_p}\big[U \cdot \big(\rho_{x_{t+2}} \otimes \\ &\quad \big(\mathrm{tr_p}\left[U \cdot \left(\rho_{x_{t+1}} \otimes I_{Ch}\right) \cdot U^\dagger\right]\big)\big) \cdot U^\dagger\big] \cdots\big)\big) \cdot U^\dagger \otimes I_{Ch}\big],\end{aligned} \tag{10}$$

where I_{Ch} represents the identity matrix with a dimension equal to the state ρ_{Ch_t}. By considering (10) as an evolution from the input density matrix $\rho_{xCh}^{(t+1)} = \rho_{x_{t+1}} \otimes \frac{I_{Ch}}{N_{Ch}}$ to the output density

Authorized licensed use limited to: CBS Library. Downloaded on March 31,2026 at 20:54:35 UTC from IEEE Xplore. Restrictions apply.

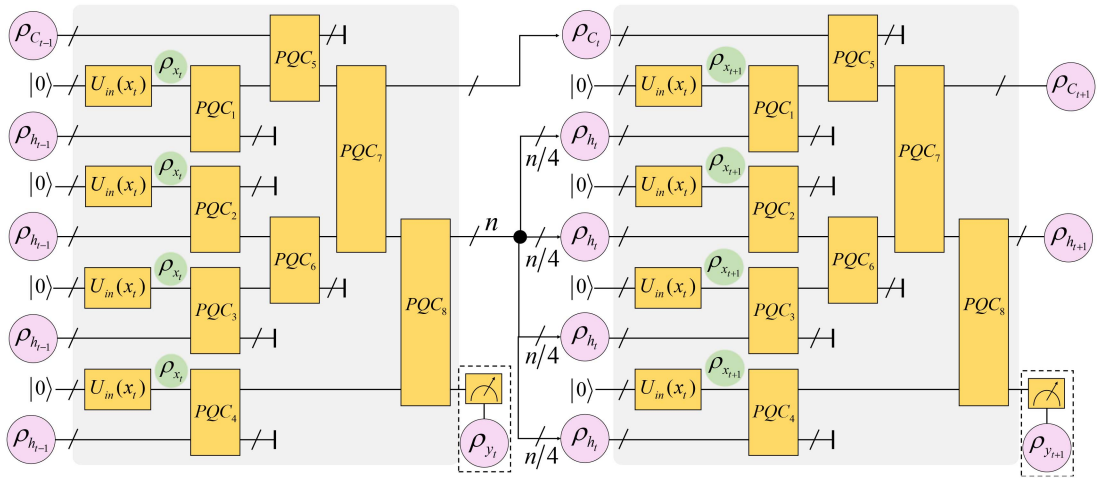

Fig. 5. Illustration of the method of connecting two QLSTM cells. The qubit register that outputs the hidden state is divided into four parts, and each part is then utilized as an input ρ_{h_t} for the subsequent cell.

matrix $\rho_{xCh}^{(T)}$, we derive:

$$\frac{\partial \rho_{Ch_T}}{\partial \rho_{Ch_t}} = N_{Ch}\mathrm{tr}_{\mathrm{p}}\left[\rho_{xCh}^{(T)}\right] \otimes I_{Ch} = N_{Ch}\tilde{\rho}_{Ch} \otimes I_{Ch}, \quad (11)$$

where N_{Ch} is the dimension of I_{Ch}.

By utilizing the Frobenius norm to quantify the Jacobian matrix, we obtain:

$$\left\| \frac{\partial \rho_{Ch_T}}{\partial \rho_{Ch_t}} \right\|_{\mathrm{F}} = N_{Ch}\sqrt{\mathrm{tr}\left(\tilde{\rho}_{Ch}^2\right) \cdot \mathrm{tr}(I_{Ch})}. \quad (12)$$

Note that if the density matrix $\tilde{\rho}_{Ch}$ represents a pure state, then $\mathrm{tr}(\tilde{\rho}_{Ch}^2) = 1$; conversely, if $\tilde{\rho}_{Ch}$ is a maximum mixed state, then $\tilde{\rho}_{Ch} = \frac{I_{Ch}}{N_{Ch}}$ and $\mathrm{tr}(\tilde{\rho}_{Ch}^2) = \frac{1}{N_{Ch}}$. Using these observations, we can establish bounds for the Frobenius norm of the Jacobian.

Theorem: For the QGRNN networks constructed by interconnecting QGRNN cells, as illustrated in Fig. 5, the matrix norm of the Jacobian with respect to the density matrices of intermediate states ρ_{Ch_T} and ρ_{Ch_t} at time steps T and t, with $T > t$, satisfies:

$$N_{Ch} \leq \left\| \frac{\partial \rho_{Ch_T}}{\partial \rho_{Ch_t}} \right\|_{\mathrm{F}} \leq \sqrt{N_{Ch}^3}. \quad (13)$$

Note that N_{Ch} remains constant, regardless of the sequence length T. Therefore, the norm of the Jacobians is bounded, ensuring that the gradient of long-term interactions in QGRNN neither vanishes nor explodes. These findings can be generalized to general QRNNs, as detailed in the Supplementary Material (Section I).

Furthermore, the absence of gradient exploding in QGRNNs can be directly observed by analyzing the magnitude of the parameter derivatives. Specifically, using the parameter shift rule, the derivatives of the parameters in QGRNNs can be formulated as:

$$\frac{\partial \langle M \rangle}{\partial \theta_j} = \left(\langle M \rangle_{\boldsymbol{\theta}+\frac{\pi}{2}\cdot \boldsymbol{e_j}} - \langle M \rangle_{\boldsymbol{\theta}-\frac{\pi}{2}\cdot \boldsymbol{e_j}}\right)/2, \quad (14)$$

where M denotes the measurement operation, $\boldsymbol{\theta}$ represents the parameter vector, and $\boldsymbol{e_j}$ is a unit vector with the j_{th} element being 1 and the rest being 0. Each term on the right-hand side corresponds to the expectation value of the eigenvalues of M, i.e., $\langle M \rangle = \sum_i \lambda_i \cdot p_i$. In quantum computing, the expectation value is typically within the interval $[-1, 1]$, ensuring that derivatives in (14) also fall within this range. Therefore, the gradients in QGRNNs cannot explode. However, the derivatives may approach zero in certain scenarios, such as in the case of barren plateau.

Two architectural features of QGRNNs enable them to effectively mitigate the barren plateau phenomenon. First, the quantum circuits of the QGRNN cells are highly structured and do not form a 2-design. This means that the distribution of the quantum states output by the QGRNN circuits is less full and uniform compared to random quantum circuit, which is the primary cause of the barren plateau [16], [17]. Second, the parameters in QGRNNs are shared across all cells, resulting in a strong correlation between parameters in the QGRNN ansatz. Correlating parameters has been proven to be an effective approach to avoid the barren plateau [38]. Additionally, QGRNNs employ local quantum measurement, which can also effectively mitigate the barren plateau [17].

In essence, QGRNNs provide an instantiation of the concept that avoids the barren plateau in QNNs by reducing the expressibility of the ansatz circuit. The expressibility of the QGRNN ansatz is neither excessively high, thus helping to mitigate the barren plateau, nor too low, ensuring it remains sufficiently expressive to guarantee its completeness for sequential learning tasks.

IV. Experimental Results

In this section, we conduct a series of numerical experiments to demonstrate the effectiveness of QGRNNs in sequential learning. Our learning tasks include the adding problem, learning gene regulatory networks, and predicting stock prices. Additionally, we showcase the robustness of QGRNNs against quantum noise that is inherent in near-term quantum devices.

In the experiments, both the QLSTM and QGRU architectures are evaluated. The specific quantum circuits used for QLSTM

Authorized licensed use limited to: CBS Library. Downloaded on March 31,2026 at 20:54:35 UTC from IEEE Xplore. Restrictions apply.

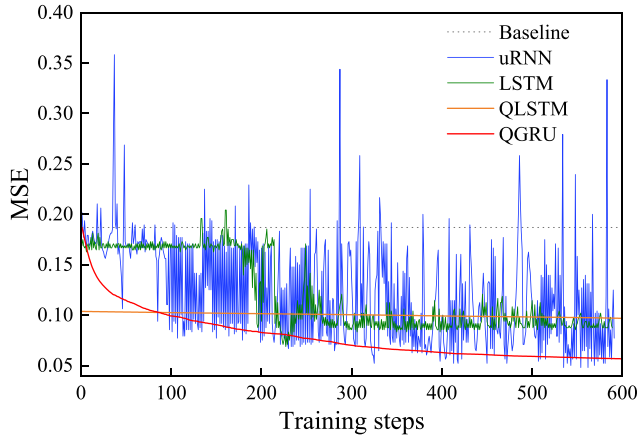

Fig. 6. Results of the adding problem for $T = 750$. Note that QGRU achieves superior performance, exhibiting the lowest test error and rapid, smooth convergence.

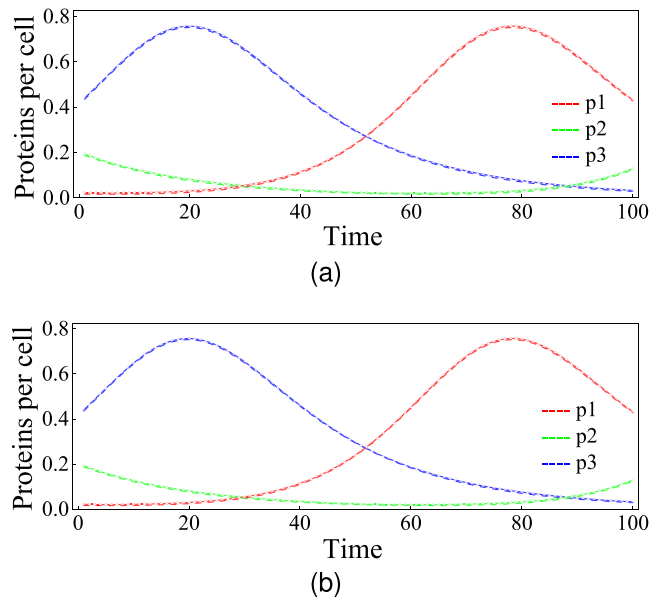

Fig. 7. Predictions for the protein concentration of the synthetic oscillatory network by the (a) QLSTM and (b) QGRU models. The predicted values (represented by dotted lines) show good agreement with the actual values (represented by solid lines).

and QGRU in our experiments are detailed in the Supplementary Material (Section II). The derivatives of the parameters are computed using the parameter shift method [7]. The SGD optimizer is employed to update the parameters. The experiments are implemented using the QPanda and pyVQNet 2.0.7 software frameworks [39] on a 13th Gen Intel® Core™ i9-13900KF CPU. All the datasets used in our experiments are available on GitHub [40].

A. Adding Problem

The adding problem is a commonly used task to evaluate the ability of RNN models to learn long-term dependencies. In this task, each input consists of two sequences with a length of T. The first sequence comprises numbers randomly sampled from the interval [0,1], while the second sequence consists of exactly two '1' entries and the rest are '0's. The desired output is the sum of the two numbers from the first sequence that correspond to the positions of the '1' entries in the second sequence.

In order to enable a direct comparison of QGRNNs' performance, we closely follow the adding problem employed in [4]. The results for $T = 750$ are presented in Fig. 6, which represents the longest sequence and thus the most challenging adding problem from [4]. The learning rate used for this task is 0.01. As evident from the figure, both QLSTM and QGRU demonstrate exceptional performance, exhibiting low test error and a smooth, noise-free curve. Notably, QGRU achieves nearly optimal results. Moreover, it is noteworthy that QLSTM and QGRU achieve this level of performance with a significantly lower number of parameters, specifically 63 and 42, respectively, compared to the approximately 60,000 and 9,000 parameters required by LSTM and uRNN in [4]. These results convincingly demonstrate the ability of QGRNNs to effectively learn long-term dependencies.

B. Gene Regulatory Networks

A gene regulatory network is a system of molecular regulators that interact with each other to control the expression levels of mRNA and proteins within a cell. Such networks exhibit intricate dynamical processes, which have been harnessed to evaluate the learning ability of quantum models [41]. In this study, we adopt two distinct gene regulatory networks from [41], namely the synthetic oscillatory network and the chaotic motif network, to evaluate the performance of QGRNNs. Here, we present the results for the first network, while the results for the second network can be found in the Supplementary Material (Section III).

The dynamics of the synthetic oscillatory network are governed by a set of six coupled differential equations [42]:

$$\frac{dm_i}{dt} = -m_i + \frac{\alpha}{1 + p_j^{h_n}} + \alpha_0, \quad j = \text{LacI, TetR, CI},$$
$$\frac{dp_i}{dt} = -\beta\left(p_i - m_i\right), \qquad i = \text{CI, LacI, TetR}, \tag{15}$$

where m_i and p_i represent the concentrations of mRNA and repressor-protein respectively, and LacI, TetR and CI denote the regulators in this network. The concentration of mRNA is regulated by the corresponding repressor-protein concentration through the term $\frac{\alpha}{1+p_j^{h_n}}$, where h_n is the Hill coefficient. The parameter β represents the decay rate of protein relative to that of mRNA.

To construct the training and test datasets, we discretize the equations in (15) using a time step of $\delta t = 0.05$. The parameters are set as $\alpha = 400$, $\alpha_0 = 0.4$, $h = 2$, and $\beta = 5$. The initial 6000 time steps are utilized as the training dataset, while the subsequent 100 steps serve as the test dataset.

The predictions for protein concentration made by QLSTM and QGRU are presented in Fig. 7. The learning rate for this task is 0.0001. As shown in the figure, both QLSTM and QGRU

Authorized licensed use limited to: CBS Library. Downloaded on March 31,2026 at 20:54:35 UTC from IEEE Xplore. Restrictions apply.

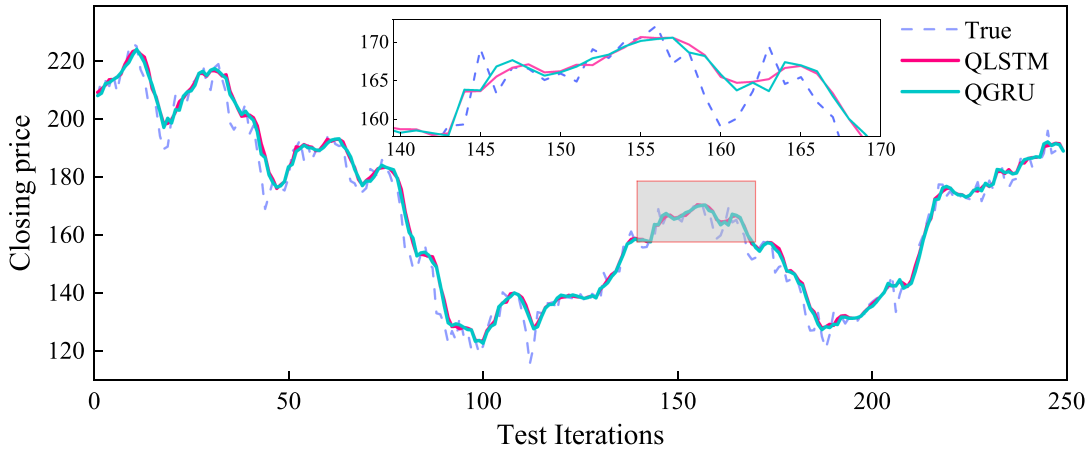

Fig. 8. Prediction curves of QLSTM and QGRU for the BA stock.

are capable of accurately predicting the protein concentration as well as capturing its oscillatory behavior. The discrepancy, measured by the relative error $\frac{1}{n}\sum_{i=1}^{n}(\frac{|y_i-\hat{y_i}|}{y_i})$, is at the order of 10^{-3}. These results effectively demonstrate the efficiency of QGRNNs in modeling complex dynamical evolution processes.

C. Market Price Prediction

In order to establish a convincing benchmark for assessing the performance of QGRNN in predicting market prices, we closely follow the tasks employed by two recent and notable studies that predict market prices using classical and quantum deep learning models [43], [44].

In one study, Gulmez [43] developed two refined deep LSTM networks, named LSTM-ARO and LSTM-GA, which respectively employ the Artificial Rabbits Optimization (ARO) algorithm and the Genetic Algorithm (GA) to optimize the hyperparameters of a deep LSTM. In another work, Paquet et al. [44] developed a hybrid quantum deep neural network called QuantumLeap, which integrates a deep QNN [45] with a classical dense neural network. These models achieved superior results in predicting stock prices compared to their counterparts.

Since the datasets employed in these two studies are not exactly the same, we utilize the intersecting datasets from both papers. Specifically, we compiled data for 12 stocks, covering the period from 2018.01.01 to 2023.01.01, sourced from Yahoo Finance [46]. These stocks include Apple (AAPL), Boeing (BA), Caterpillar (CAT), Cisco (CSCO), Home Depot (HD), International Business Machines (IBM), Juniper Networks (JNJ), JPMorgan (JPM), Coca Cola (KO), 3M (MMM), Microsoft (MSFT), and Walmart (WMT). Each stock's data comprises a sequence length of 1259, representing the stock indices of 1259 trading days; each day contains six indices: opening price, highest price, lowest price, closing price, adj closing price, and trading volume.

The task of stock price prediction is to use the indices data from the preceding five days to predict the closing price of the subsequent day. Therefore, QGRNNs are configured with five cells to embed the data of the preceding five days. The initial 80% of each sequence's data is assigned as the training set, while the remaining 20% constitutes the test set (namely the days for which prices are to be predicted). Each data entry is pre-normalized as $x_i = (x_i - x_{\min})/(x_{\max} - x_{\min})$.

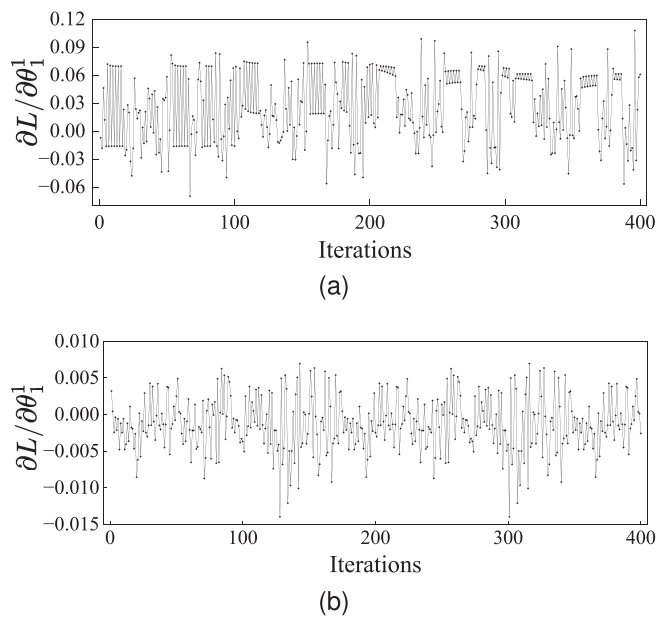

Fig. 9. Derivatives of the first parameter in the (a) QLSTM and (b) QGRU ansatz, which are sampled during the training process.

Performance Results. Fig. 8 displays the prediction curves of QLSTM and QGRU for the BA stock. The complete set of prediction curves for all 12 stocks is included in the Supplementary Material (Section IV). The learning rate for this task is 0.06. As evident from these figures, both QLSTM and QGRU are capable of accurately forecasting the prices of all stocks, as well as capturing the intricate fluctuations in price variation trends.

In order to numerically assess whether QLSTM and QGRU encounter the vanishing or exploding gradients in this task, we sample the derivatives of the parameters from the QLSTM and QGRU ansatz circuits during training and analyze their variation trends over iteration steps. Fig. 9 presents the results for the first parameter, namely θ_1^1 as depicted in Fig. 4. The complete set

Authorized licensed use limited to: CBS Library. Downloaded on March 31,2026 at 20:54:35 UTC from IEEE Xplore. Restrictions apply.

TABLE I
COMPARISON OF QLSTM, QGRU, LSTM-ARO, AND LSTM-GA USING THE RMSE, MAPE(%), AND R^2 METRICS

Stock/Metrics	QGRU			QLSTM			LSTM-ARO [43]			LSTM-GA [43]		
	RMSE	MAPE(%)	R^2	RMSE	MAPE(%)	R^2	RMSE	MAPE(%)	R^2	RMSE	MAPE(%)	R^2
AAPL	1.775	1.4	0.879	1.780	1.5	0.874	4.768	2.5	0.857	4.910	2.6	0.848
BA	1.752	1.2	0.952	1.756	1.2	0.924	5.802	2.7	0.954	6.342	3.0	0.945
CAT	0.822	0.8	0.887	0.831	0.7	0.880	6.199	2.5	0.909	6.027	2.4	0.914
CSCO	0.728	1.1	0.975	0.796	1.2	0.942	0.995	1.6	0.961	1.069	1.7	0.954
HD	1.764	0.4	0.911	1.779	0.5	0.902	7.908	2.1	0.902	7.733	2.0	0.906
IBM	0.765	0.5	0.897	0.830	0.6	0.888	2.708	1.7	0.884	2.700	1.6	0.885
JNJ	0.814	0.3	0.839	0.821	0.4	0.835	2.388	1.1	0.834	2.241	1.1	0.854
JPM	0.805	0.5	0.935	0.814	0.5	0.942	3.226	2.0	0.940	3.595	2.4	0.924
KO	0.784	0.3	0.857	0.791	0.3	0.828	0.978	1.2	0.841	0.965	1.3	0.845
MMM	0.641	0.3	0.949	0.645	0.3	0.949	3.387	2.0	0.947	3.222	1.9	0.953
MSFT	0.760	0.4	0.879	0.762	0.4	0.873	7.958	2.5	0.892	8.902	2.9	0.865
WMT	0.780	0.6	0.911	0.786	0.5	0.874	3.290	1.7	0.888	3.324	1.7	0.885

TABLE II
COMPARISON OF QLSTM, QGRU, QRNN, AND QUANTUMLEAP USING THE MAPE(%) AND RMSE METRICS

Stock/Metrics	QGRU		QLSTM		QuantumLeap [44]	
	RMSE	MAPE(%)	RMSE	MAPE(%)	RMSE	MAPE(%)
AAPL	1.41	1.77	1.55	1.78	1.85	2.83
BA	1.15	1.75	1.16	1.75	1.21	2.63
CAT	0.77	0.82	0.65	0.83	0.42	0.78
CSCO	1.08	0.73	1.21	0.79	2.53	1.35
HD	0.44	1.76	0.50	1.78	0.51	1.93
IBM	0.54	0.76	0.58	0.83	0.48	0.7
JNJ	0.29	0.81	0.39	0.82	0.25	0.5
JPM	0.51	0.80	0.54	0.80	0.51	0.81
KO	0.33	0.78	0.35	0.79	0.23	0.14
MMM	0.29	0.64	0.31	0.64	0.34	0.7
MSFT	0.39	0.76	0.37	0.76	0.50	1.39
WMT	0.60	0.78	0.52	0.78	0.42	0.72

of sampled results for all parameter derivatives during training is available in the Supplementary Material (Section V). These results suggest that QLSTM and QGRU do not exhibit the vanishing or exploding gradients when predicting stock prices.

We now proceed to compare the performance of QLSTM and QGRU against the models in the aforementioned two studies. Since the two studies employ different metrics to measure the prediction accuracy of their models, we adopt the corresponding metrics to separately compare our results with theirs. Specifically, we utilize the Root Mean Square Error (RMSE), Mean Absolute Percentage Error (MAPE), and the coefficient of determination (R^2), which are defined as follows:

$$RMSE = \sqrt{\frac{1}{N}\sum\nolimits_{i=1}^{N}(y_i - \hat{y}_i)^2},$$

$$MAPE = \frac{1}{N}\sum_{i=1}^{N}\frac{|y_i - \hat{y}_i|}{y_i},$$

$$R^2 = 1 - \frac{\sum_{i=1}^{N}(y_i - \hat{y}_i)^2}{\sum_{i=1}^{N}(y_i - \bar{y})^2}, \tag{16}$$

where y_i represents the actual value, $\hat{y}_i$ represents the predicted value, and $\bar{y}$ is the mean of the actual values. The RMSE and MAPE are metrics that quantify the discrepancy between predicted and actual values; the closer they approach 0, the better the model. On the other hand, R^2 is an indicator of how well a model fits the data; the closer it approaches 1, the better the model.

Table I presents a comparison of our QLSTM and QGRU results with the results of LSTM-ARO and LSTM-GA reported in [43], using RMSE, MAPE and R^2 as evaluation metrics. Table II showcases a comparison of our results with QuantumLeap's results reported in [44], using RMSE and MAPE as metrics. As seen from these tables, QLSTM and QGRU models achieve higher predictive accuracy compared to both classical and quantum models for most of the 12 stocks.

More remarkably, QLSTM and QGRU achieve exceptional precision with significantly fewer parameters compared to other models. As shown in Table III, both QLSTM and QGRU utilize only a fraction of the parameters required by the other models. This highlights the efficient ability of QLSTM and QGRU to capture patterns within sequence data using minimal parameters, which is crucial for the trainability and generalization abilities of QGRNNs.

Moreover, we demonstrate the proficiency of our QGRNN models in consecutive stock price prediction. Specifically, we utilize data from the preceding five days to forecast stock prices for multiple subsequent days. The detailed results are provided in the Supplementary Material (Section VI). This consecutive prediction ability is crucial for the application of QGRNNs in

Authorized licensed use limited to: CBS Library. Downloaded on March 31,2026 at 20:54:35 UTC from IEEE Xplore. Restrictions apply.

TABLE III
THE NUMBER OF PARAMETERS USED BY THE QLSTM, QGRU, LSTM-ARO, LSTM-GA, AND QUANTUMLEAP MODELS

# of parameters	QLSTM	QGRU	LSTM-ARO [43]	LSTM-GA [43]	QuantumLeap [44]
	63	42	2500-10000	2500-10000	420-1000+

TABLE IV
PERFORMANCE OF QLSTM AND QGRU (USING MAPE (%) AS METRIC) UNDER THE BIT-FLIP, PHASE-FLIP, AND COMPREHENSIVE NOISE

Stock/Metrics	QGRU				QLSTM			
	w/o noise	bit-flip	phase-flip	comp. noise	w/o noise	bit-flip	phase-flip	comp. noise
AAPL	1.41	1.49	1.47	2.75	1.55	1.63	1.57	2.79
BA	1.15	1.96	1.95	3.56	1.16	1.95	1.96	3.58
CAT	0.77	0.83	0.85	1.41	0.65	0.82	0.82	1.42
CSCO	1.08	1.08	1.18	2.20	1.21	1.08	1.09	2.20
HD	0.44	0.51	0.47	0.82	0.50	0.53	0.55	0.91
IBM	0.54	0.55	0.57	0.94	0.58	0.56	0.57	0.97
JNJ	0.29	0.35	0.37	0.69	0.39	0.38	0.41	0.70
JPM	0.51	0.53	0.55	1.25	0.54	0.55	0.56	1.24
KO	0.33	0.39	0.39	0.82	0.35	0.39	0.37	0.74
MMM	0.29	0.33	0.33	0.68	0.31	0.30	0.32	0.70
MSFT	0.39	0.44	0.30	0.76	0.37	0.41	0.39	0.77
WMT	0.60	0.71	0.73	1.86	0.52	0.65	0.71	1.87

practical forecasting scenarios. It is intriguing to explore the potential of applying QGRNNs to real-world financial problems based on stock price prediction. We leave this for future work.

D. Robustness Against Quantum Noise

In this section, we demonstrate the resilience of QGRNNs against quantum operation noises, which impose significant constraints on near-term NISQ devices. Quantum noise can introduce unintended alterations to the amplitudes or even the bit strings of the quantum state, resulting in measurement outcomes that deviate significantly from their true values. Therefore, evaluating the performance of QGRNNs under quantum noise is essential for testing their feasibility and reliability on NISQ devices.

In general, quantum noise can be described using the operator-sum representation as follows:

$$\varepsilon(\rho) = \sum_k \langle e_k | U\left(\rho \otimes |e_0\rangle\langle e_0|\right) U^\dagger | e_k \rangle = \sum_k E_k \rho E_k^\dagger \quad (17)$$

where ρ and $|e_0\rangle\langle e_0|$ represent the density matrix of the initial state of the quantum system and the environment, respectively; $|e_k\rangle$ denotes the basis state of the environment system. The Kraus operators E_k are used to describe various types of quantum noise, including bit-flip, phase-flip, depolarizing, and amplitude damping noise.

Bit-flip and phase-flip noise are the fundamental types of quantum noise that can be combined to emulate various other forms of noise. Therefore, evaluating the performance of QLSTM and QGRU under these two types of noise is sufficient to test their robustness against quantum noise in a broad sense. In this study, we individually introduce bit-flip, phase-flip, and comprehensive noise into the quantum circuits of QLSTM and QGRU. The comprehensive noise combines all types of noise provided by QPanda [39]. The noise intensity is set at $p = 0.1$.

The prediction curves of QLSTM and QGRU, influenced by bit-flip, phase-flip, and comprehensive noise, are depicted in Fig. 10. The corresponding prediction accuracy, measured using the MAPE metric, is presented in Table IV. These results demonstrate that quantum noise has a minimal impact on the performance of both QLSTM and QGRU models. Therefore, both QLSTM and QGRU exhibit strong resilience against quantum noise. These findings highlight the practicality of utilizing QGRNNs on near-term NISQ devices.

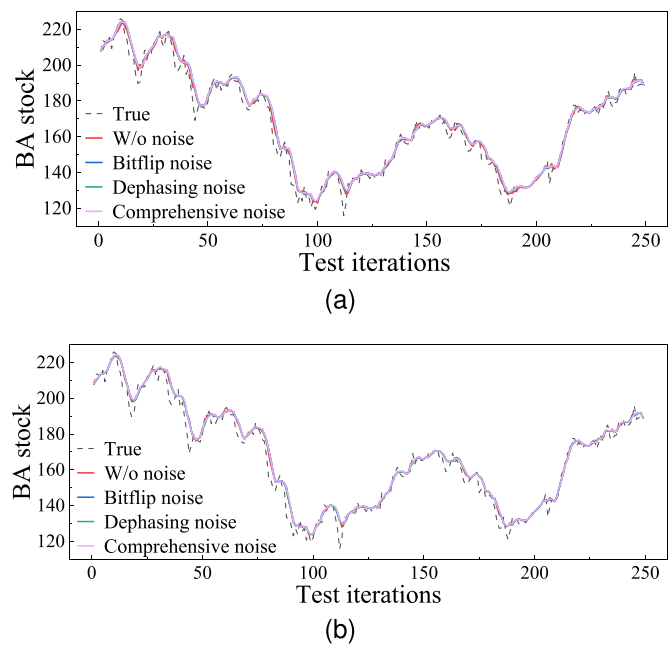

Fig. 10. Prediction curves of (a) QLSTM and (b) QGRU for the BA stock under the influence of bit-flip, phase-flip, and comprehensive noise.

V. CONCLUSION

In this study, we develop the model of QGRNNs to address the gradient vanishing and exploding problem that often plagues

Authorized licensed use limited to: CBS Library. Downloaded on March 31,2026 at 20:54:35 UTC from IEEE Xplore. Restrictions apply.

classical RNNs. We devise the QLSTM and QGRU cells by integrating the gating mechanisms of LSTM and GRU into the framework of the QNN variational ansatz circuit. The QLSTM and QGRU architectures are obtained by interconnecting the recurrent cells, either directly or in a staggered configuration. Our QGRNNs are fully quantum-parameterized and constructed using hardware-efficient ansatz circuits, ensuring their efficient implementation on near-term NISQ devices.

We present a rigorous proof demonstrating that QGRNNs can preserve the gradient norm throughout the recurrent network, thereby ensuring that the gradient of long-term interactions in QGRNNs neither vanishes nor explodes. Furthermore, the architectural features of QGRNNs can effectively mitigate the barren plateau phenomenon. Consequently, QGRNNs can effectively address the challenge of gradient vanishing and exploding encountered by RNNs and QNNs.

The efficacy of QGRNNs in sequential learning is demonstrated through various typical tasks, including the adding problem, learning gene regulatory networks, and predicting stock prices. The experimental results demonstrate that QGRNNs can achieve superior performance while utilizing significantly fewer parameters. Furthermore, we showcase the robustness of QGRNNs against quantum noise in quantum operations.

We believe that QGRNNs represent a canonical QNN model for sequential learning. Future work of interest includes: 1) developing a mathematical approach to analyze the lower bound of the gradients of QGRNNs, providing quantitative insights into the interplay between ansatz architecture and the barren plateau phenomenon; 2) assessing the practical operational efficiency of QGRNNs on actual quantum devices, including superconducting and optical platforms; 3) evaluating the performance of QGRNNs in diverse sequential tasks, such as text classification, weather forecasting, and modeling the dynamical evolution of quantum many-body systems, and exploring their potential for advantageous applications in domains like natural language processing and quantum physics.

Acknowledgment

The authors are grateful for the support from Marine Big Data Center of Institute for Advanced Ocean Study of Ocean University of China, and the professional and technical services provided by Yujie Dong. The authors also thank the technical team from the Origin Quantum Computing Company for their professional services.

References

[1] S. Li, W. Li, C. Cook, C. Zhu, and Y. Gao, "Independently Recurrent Neural Network (IndRNN): Building a longer and deeper RNN," in *Proc. IEEE Conf. Comput. Vis. Pattern Recognit.*, 2018, pp. 5457–5466.

[2] I. Goodfellow, Y. Bengio, and A. Courville, "Sequence modeling: Recurrent and recursive nets," in *Deep Learning*. Cambridge, MA, USA: MIT Press, 2016, pp. 367–415.

[3] S. Hochreiter and J. Schmidhuber, "Long short-term memory," *Neural Comput.*, vol. 9, no. 8, pp. 1735–1780, 1997.

[4] M. Arjovsky, A. Shah, and Y. Bengio, "Unitary evolution recurrent neural networks," in *Proc. Int. Conf. Mach. Learn.*, PMLR, 2016, pp. 1120–1128.

[5] M. O. Turkoglu, S. D'Aronco, J. D. Wegner, and K. Schindler, "Gating revisited: Deep multi-layer RNNs that can be trained," *IEEE Trans. Pattern Anal. Mach. Intell.*, vol. 44, no. 8, pp. 4081–4092, Aug. 2022.

[6] J. Biamonte et al., "Quantum machine learning," *Nature*, vol. 549, no. 7671, pp. 195–202, 2017.

[7] M. Schuld and F. Petruccione, *Machine Learning With Quantum Computers*. Berlin, Germany: Springer International Publishing, 2022. [Online]. Available: https://books.google.com/books?id=_ldlzwEACAAJ

[8] Y. Liu, S. Arunachalam, and K. Temme, "A rigorous and robust quantum speed-up in supervised machine learning," *Nat. Phys.*, vol. 17, no. 9, pp. 1013–1017, 2021.

[9] E. Farhi and H. Neven, "Classification with quantum neural networks on near term processors," 2018, *arXiv: 1802.06002*.

[10] J. Tian et al., "Recent advances for quantum neural networks in generative learning," *IEEE Trans. Pattern Anal. Mach. Intell.*, vol. 45, no. 10, pp. 12321–12340, Oct. 2023.

[11] A. Abbas et al., "The power of quantum neural networks," *Nat. Comput. Sci.*, vol. 1, no. 6, pp. 403–409, 2021.

[12] M. Benedetti et al., "Parameterized quantum circuits as machine learning models," *Quantum Sci. Technol.*, vol. 4, no. 4, 2019, Art. no. 043001.

[13] S. Wei et al., "A quantum convolutional neural network on NISQ devices," *AAPPS Bull.*, vol. 32, pp. 1–11, 2022.

[14] J. Preskill, "Quantum computing in the NISQ era and beyond," *Quantum*, vol. 2, 2018, Art. no. 79.

[15] J. W. Z. Lau et al., "NISQ computing: Where are we and where do we go?," *AAPPS Bull.*, vol. 32, no. 1, 2022, Art. no. 27.

[16] J. R. McClean et al., "Barren plateaus in quantum neural network training landscapes," *Nat. Commun.*, vol. 9, no. 1, 2018, Art. no. 4812.

[17] M. Cerezo et al., "Cost function dependent Barren plateaus in shallow parametrized quantum circuits," *Nat. Commun.*, vol. 12, no. 1, 2021, Art. no. 1791.

[18] A. Pesah et al., "Absence of Barren plateaus in quantum convolutional neural networks," *Phys. Rev. X*, vol. 11, no. 4, 2021, Art. no. 041011.

[19] H.-L. Huang et al., "Near-term quantum computing techniques: Variational quantum algorithms, error mitigation, circuit compilation, benchmarking and classical simulation," *Sci. China Phys., Mechanics Astron.*, vol. 66, no. 5, 2023, Art. no. 250302.

[20] J. Bausch, "Recurrent quantum neural networks," in *Proc. Adv. Neural Inf. Process. Syst.*, 2020, pp. 1368–1379.

[21] Y. Li et al., "Quantum recurrent neural networks for sequential learning," *Neural Netw.*, vol. 166, pp. 148–161, 2023.

[22] Y. Takaki et al., "Learning temporal data with a variational quantum recurrent neural network," *Phys. Rev. A*, vol. 103, no. 5, 2021, Art. no. 052414.

[23] S. Y.-C. Chen, S. Yoo, and Y.-L. L. Fang, "Quantum long short-term memory," in *Proc. 2022 IEEE Int. Conf. Acoust. Speech Signal Process.*, 2022, pp. 8622–8626.

[24] R. Di Sipio, J. -H. Huang, S. Y. -C. Chen, S. Mangini, and M. Worring, "The dawn of quantum natural language processing," in *Proc. 2022 IEEE Int. Conf. Acoust. Speech Signal Process.*, 2022, pp. 8612–8616.

[25] M. Henderson et al., "Quanvolutional neural networks: Powering image recognition with quantum circuits," *Quantum Mach. Intell.*, vol. 2, no. 1, 2020, Art. no. 2.

[26] I. Cong, S. Choi, and M. D. Lukin, "Quantum convolutional neural networks," *Nat. Phys.*, vol. 15, no. 12, pp. 1273–1278, 2019.

[27] A. Ashta and H. Herrmann, "Artificial intelligence and fintech: An overview of opportunities and risks for banking, investments, and microfinance," *Strategic Change*, vol. 30, no. 3, pp. 211–222, 2021.

[28] K. Bharti et al., "Noisy intermediate-scale quantum algorithms," *Rev. Modern Phys.*, vol. 94, no. 1, 2022, Art. no. 015004.

[29] M. Schuld and N. Killoran, "Quantum machine learning in feature Hilbert spaces," *Phys. Rev. Lett.*, vol. 122, no. 4, 2019, Art. no. 040504.

[30] Havlíček et al., "Supervised learning with quantum-enhanced feature spaces," *Nature*, vol. 567, no. 7747, pp. 209–212, 2019.

[31] Z. Zhou, H. Li, and G.-L. Long, "Variational quantum algorithm for node embedding," *Fundam. Res.*, vol. 4, pp. 845–850, 2024, doi: 10.1016/j.fmre.2023.10.001.

[32] J. Haferkamp et al., "Linear growth of quantum circuit complexity," *Nat. Phys.*, vol. 18, no. 5, pp. 528–532, 2022.

[33] Y. Du et al., "Problem-dependent power of quantum neural networks on multiclass classification," *Phys. Rev. Lett.*, vol. 131, no. 14, 2023, Art. no. 140601.

[34] J. Chung et al., "Empirical evaluation of gated recurrent neural networks on sequence modeling," in *Proc. Int. Conf. Neural Inf. Process. Syst. Workshop*, 2014, *arXiv:1412.3555*.

Authorized licensed use limited to: CBS Library. Downloaded on March 31,2026 at 20:54:35 UTC from IEEE Xplore. Restrictions apply.

[35] S. Sim, P. D. Johnson, and A. Aspuru-Guzik, "Expressibility and entangling capability of parameterized quantum circuits for hybrid quantum-classical algorithms," *Adv. Quantum Technol.*, vol. 2, no. 12, 2019, Art. no. 1900070.
[36] Z. Liu et al., "Presence and absence of Barren plateaus in tensor-network based machine learning," *Phys. Rev. Lett.*, vol. 129, no. 27, 2022, Art. no. 270501.
[37] K. B. Petersen and M. S. Pedersen, "Derivatives," in *The Matrix Cookbook*. Kongens Lyngby, Denmark: Technical University of Denmark, 2008. [Online]. Available: http://matrixcookbook.com
[38] Z. Holmes et al., "Connecting ansatz expressibility to gradient magnitudes and Barren plateaus," *PRX Quantum*, vol. 3, no. 1, 2022, Art. no. 010313.
[39] M.-H. Dou et al., "QPanda: High-performance quantum computing framework for multiple application scenarios," 2022, *arXiv:2212.14201*.
[40] 2024. [Online]. Available: https://github.com/Lynn11312/QGATE_dataset
[41] W. Xia et al., "Configured quantum reservoir computing for multi-task machine learning," *Sci. Bull.*, vol. 68, no. 20, pp. 2321–2329, 2023.
[42] M. B. Elowitz and S. Leibler, "A synthetic oscillatory network of transcriptional regulators," *Nature*, vol. 403, no. 6767, pp. 335–338, 2000.
[43] B. Gülmez, "Stock price prediction with optimized deep LSTM network with artificial rabbits optimization algorithm," *Expert Syst. Appl.*, vol. 227, 2023, Art. no. 120346.
[44] E. Paquet and F. Soleymani, "QuantumLeap: Hybrid quantum neural network for financial predictions," *Expert Syst. Appl.*, vol. 195, 2022, Art. no. 116583.
[45] K. Beer et al., "Training deep quantum neural networks," *Nat. Commun.*, vol. 11, no. 1, 2020, Art. no. 808.
[46] Yahoo Finance – Stock Market Live, Quotes, Business Finance News. Accessed: Nov. 28, 2023. [Online]. Available: https://finance.yahoo.com/

Yanan Li is currently working toward the PhD degree with the College of Physics and Optoelectronic Engineering, Ocean University of China, focusing on quantum computing and quantum machine learning. Her research endeavors to understand the principles of quantum recurrent neural networks and demonstrate its quantum advantage, while also exploring its applications in diverse fields, such as finance and physics.

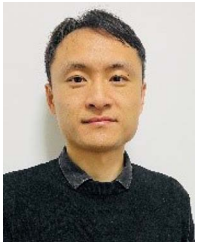

Zhimin Wang received the PhD degree from Peking University in 2017, where he specialized in nuclear science and technology. Presently, his research primarily focuses on quantum computing and quantum algorithms, particularly quantum machine learning and its applications in physics. He is an associate professor with the College of Physics and Optoelectronic Engineering, Ocean University of China.

Ruipeng Xing is currently working toward the postgraduate degree with the College of Physics and Optoelectronic Engineering, Ocean University of China. His research interests include quantum computing and quantum machine learning. His research is devoted to the theoretical demonstration of the properties of quantum neural networks, coupled with numerical experiments to substantiate their superiority.

Changheng Shao is currently working toward the PhD degree with Qingdao University, specializing in the application of artificial intelligence and complex network, among other areas.

Shangshang Shi is currently working toward the PhD degree with the College of Physics and Optoelectronic Engineering, Ocean University of China. Her research focuses on quantum machine learning, particularly quantum deep learning.

Jiaxin Li received the BA degree from the School of Science, Qingdao University of Technology. She is currently working toward the PhD degree with the College of Physics and Optoelectronic Engineering, Ocean University of China. Her current research interests include quantum communication, quantum networks, quantum error correction, and quantum deep learning.

Guoqiang Zhong (Member, IEEE) received the PhD degree in pattern recognition and intelligent systems from the Institute of Automation, Chinese Academy of Sciences (CASIA), Beijing, China, in 2011. He is now a full professor with the College of Computer Science and Technology, Ocean University of China. He has published 6 books, 4 book chapters and more than 100 technical papers in the areas of artificial intelligence, pattern recognition, machine learning, and computer vision. His research interests include pattern recognition, machine learning, and computer vision. He has served as Chair/PC member/reviewer for many international conferences and top journals, and has been awarded outstanding reviewer by several journals, such as pattern recognition, knowledge-based systems, neurocomputing and cognitive systems research. He has won the APNNS Young Researcher Award.

Yongjian Gu received the PhD degree from the University of Science and Technology of China in 2004. He is a professor with the College of Physics and Optoelectronic Engineering, Ocean University of China. His research interests are in the areas of quantum optics, marine optics, and quantum information, especially quantum communication and quantum algorithms. Recent projects have included underwater quantum key distribution and quantum deep learning. He has reviewed for the journals including *Physical Review A, Physics Letters A, and Chinese Physics Letters*. He is a council member of Chinese Optical Society, and is a coauthor of more than 100 articles.

Authorized licensed use limited to: CBS Library. Downloaded on March 31,2026 at 20:54:35 UTC from IEEE Xplore. Restrictions apply.