# Implementing Quantum Machine Learning in Credit Card Fraud Detection

Uqba Jabeen
School of Computer & Systems Sciences
Jawaharlal Nehru University
New Delhi, India
uqbajabeen21@gmail.com

Karan Singh
School of Computer & Systems Sciences
Jawaharlal Nehru University
New Delhi, India
karancs12@gmail.com

**Abstract—Credit Card Fraud Detection (CCFD) is a major concern for the financial industry, requiring rapid and accurate identification of fraudulent transactions amidst vast datasets. The rapid evolution of quantum computing presents transformative opportunities for enhancing Machine Learning (ML) applications, particularly in the domain of financial security. This paper explores the implementation of Quantum Machine Learning (QML) techniques for CCFD, a critical challenge in the financial industry characterized by imbalanced datasets. Traditional ML models, while effective, often struggle with scalability and computational efficiency when processing large-scale transactional data. QML leverages quantum phenomenon namely entanglement and superposition to potentially outperform classical algorithms in feature extraction and pattern recognition. Our study proposes a hybrid quantum-classical framework, integrating Variational Quantum Circuits (VQC) with classical Neural Networks (NN) to classify fraudulent transactions. Using a simulated quantum environment, we preprocess a publicly available credit card transaction dataset, encoding features into quantum states for processing through a parameterized quantum circuit. The model is trained to improves its ability to detect fraud accurately with fewer false positives, addressing the critical issue of customer inconvenience.**

***Keywords—Quantum Computing, Credit Card Fraud Detection (CCFD), Machine Learning (ML), Quantum Machine Learning (QML), Variational Quantum Circuit (VQC), Fraud Detection in Finance***

## I. Introduction

In the era of digital transformation, cybersecurity has emerged as a paramount concern for safeguarding sensitive data and maintaining the integrity of online infrastructures. With the rapid growth of e-commerce, digital banking, and online transactions, the risk of cyber threats [1] has escalated, posing significant challenges for individuals, businesses, and governments. Cybersecurity encompasses a broad spectrum of practices and technologies aimed at safeguarding data, networks, and systems from unauthorized access and malicious activities. Among these challenges, fraud detection remains a pressing concern, particularly in the financial sector, where the consequences of fraudulent activities can be both financially and socially devastating.

Fraud in the digital realm takes various forms, including identity theft, online banking fraud, phishing, insurance fraud, CCF. Among these, CCF is one of the most prevalent and damaging types of financial fraud [2]. It involves the unauthorized use of a cardholder's account to make transactions or withdrawals, often resulting in substantial financial losses for individuals, banks, and merchants. Globally, CCF losses were estimated to be $32 billion in 2022 with projections suggesting they could surpass $40 billion by 2025 [3], according to a report by Nilson. In India, the Reserve Bank of India (RBI) reported that digital payment fraud cases, including those involving credit cards, increased significantly in recent years, with over 10,000 cases recorded in the fiscal year 2022 alone. These figures underscore the growing threat of fraud in an increasingly digital economy.

The need to detect and prevent CCF arises from its profound economic and societal implications. On an economic level, fraud leads to direct monetary losses, increased operational costs, and reputational damage for financial institutions and merchants. For consumers, it causes stress, inconvenience, and a loss of trust in digital payment systems. On a societal level, fraud contributes to broader criminal activities, such as money laundering and financing of illegal operations, which have far-reaching consequences. India, being one of the fastest-growing markets for digital payments, is particularly vulnerable, as the adoption of digital technologies often outpaces the implementation of robust security measures.

The motivation behind addressing CCF lies in its alarming growth and the pressing need for effective solutions. Reports from the Indian Computer Emergency Response Team (CERT-In) reveal that cybercrime, including financial fraud, has seen a sharp rise, with over 1.4 million incidents reported in 2021 [4]. These statistics highlight the urgent requirement for advanced and scalable fraud detection mechanisms. Additionally, as digital payments become an integral part of India's economy, ensuring their security is critical for fostering consumer confidence and promoting financial inclusion.

By examining the scope and impact of CCF, this work intends to strengthen digital security systems through more effective fraud prevention techniques broader effort of strengthening financial cybersecurity. Addressing this challenge is essential not only to mitigate financial losses but also to support the trust and reliability of digital financial systems, which are vital for economic growth in both global and local contexts.

## II. Background

CCFD is a challenging task that requires advanced methods to identify fraudulent transactions accurately while minimizing false positives. A variety of techniques, both traditional and modern, have been employed to tackle this issue. These methods can be broadly categorized as follows:

### *A. Statistical Method*

Traditional fraud detection methods rely on statistical analysis and predefined rules. Rule-Based Systems flag transactions based on factors like amount, frequency, or location. Z-Score Analysis identifies outliers by measuring deviations from typical behavior. Regression Models [5] predict the likelihood of fraud based on transaction patterns.

2025 International Conference on Networks and Cryptology (NETCRYPT) | 979-8-3315-2605-4/25/$31.00 ©2025 IEEE | DOI: 10.1109/NETCRYPT65877.2025.11102604


Authorized licensed use limited to: CBS Library. Downloaded on March 31,2026 at 20:57:48 UTC from IEEE Xplore. Restrictions apply.

Time-Series Analysis detects unusual patterns in transaction timing. These foundational methods, while effective for detecting basic fraud, often require integration with more advanced techniques to address the evolving and complex nature of fraud.

### B. *Artificial Intelligence Method*

Artificial Intelligence (AI) based method enhances fraud detection by automating pattern recognition [6] from large datasets. ML Supervised Learning methods like Logistic Regression (LR), Random Forests (RF), Gradient Boosting (e.g., XGBoost) and Decision Trees (DT) are used for classification and improving prediction accuracy. ML Unsupervised Learning techniques like Clustering (e.g., DBSCAN, K-Means) and Autoencoders detect anomalies by grouping transactions or learning normal patterns. Deep Learning (DL) methods, such as Convolutional Neural Networks (CNNs) for spatial feature extraction and Recurrent Neural Networks (RNNs) for sequential transaction data, are effective in identifying complex fraud patterns.

### C. *Quantum Computing Method*

Quantum computing enhances CCFD by utilizing principles like superposition and entanglement. QML utilizes quantum circuits to encode and process transactional data for enhanced pattern recognition [7] . A simple quantum circuit highlighting its component is demonstrated in Fig.1. [2]

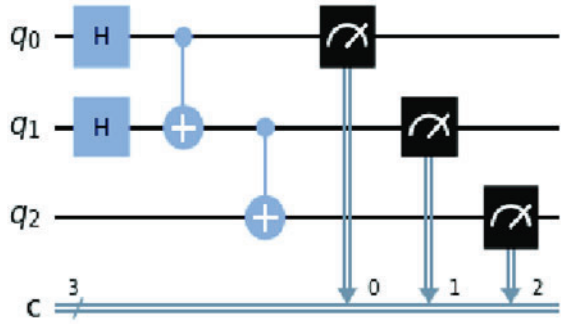


Fig. 1. Quantum Circuit

A simple quantum circuit is a computational framework in quantum computing that processes information using fundamental components: qubits, quantum gates, and measurements. Fig 1. consists of 3 qubits represented as “q0”, “q1” and “q2”, one classical bit “c”, two Hadamard Gate “H”, two CNOT Gate and 3 measurement symbols.

QSVM improve classification accuracy, while Quantum Principal Component Analysis (QPCA) efficiently handles high-dimensional data. VQC optimize anomaly detection by combining quantum and classical methods. Quantum Kernel Methods create feature spaces to better distinguish fraudulent transactions, and Grover’s Algorithm accelerates database searches for fraud detection [8]. Quantum techniques excel in addressing imbalanced datasets and uncovering subtle correlations in complex, high-dimensional data.

## III. Related Works

In [9] et.al the author introduced a novel Quantum Autoencoder-based Fraud Detection (QAE-FD) model for identifying fraudulent credit card transactions. The model leverages quantum computing to improve anomaly detection in extreme class imbalance situations with legitimate transactions orders of magnitude more frequent than fraudulent ones. The QAE-FD uses a quantum circuit to compress transaction data and a quantum classifier to detect anomalies. The QAE-FD model achieves experimental results on production transaction data show competitive performance with G-mean = 0.946 and AUC = 0.947, indicating strong balanced classification capability for fraud detection. which demonstrate superior performance compared to existing classical and quantum methods. Also, the QAE-FD model uses only 4 qubits, showcasing better quantum resource management compared to other models. The study includes a comprehensive evaluation on a real-world dataset and sensitivity analysis of the model's hyperparameters. The results demonstrate the proposed model outperforms classical models such as Classical Autoencoders (CAE) as well as other quantum models like Quantum One-Class QUANT (QO-SVM) and Quantum Graph Neural Networks (QGNN). In [10] et.al the author explored the application of VQC, a type of QML model, to financial fraud detection. The authors utilize a large, real-world dataset of bank transactions provided by Intesa Sanpaolo, which they pre-process using Principal Component Analysis (PCA) due to limitations of current quantum computers. They compare the VQC's performance against several established classical ML models, finding that the VQC demonstrates superior classification quality, particularly in terms of recall (correctly identifying fraudulent transactions), especially on datasets with fewer features. While acknowledging the preliminary nature of the work and the impact of noise on real quantum hardware, the results suggest significant potential for QML in tackling highly imbalanced classification problems like fraud detection. In [11] et.al the author introduced Quantum-SSUPPOR MOTE, a novel quantum computing algorithm designed to address class imbalance in ML datasets. Building upon the classical SMOTE technique, it leverages quantum processes like swap tests and quantum rotations to generate synthetic minority class data points. Quantum-SMOTE enhances synthetic minority oversampling through configurable quantum circuit parameters, including rotation angle (θ), minority class oversampling percentage (ρ), and quantum state splitting factor (β), enabling precise control over synthetic sample generation. The algorithm's effectiveness is demonstrated through experiments on a telecom churn dataset, using RF and LR models to evaluate the impact of varying proportions of synthetic data generated by Quantum-SMOTE. The results show improved model performance metrics, particularly for LR. The RF model performed well with and without Quantum-SMOTE. Quantum-SMOTE further enhanced its performance, resulting in gradual improvements in test accuracy, F1 scores, and AUC scores for both Precision-Recall (PR) and Receiver Operating Characteristic (ROC) curves as the proportion of synthetic minority data increased. In [12] et.al the author has explored the application of QML to enhance cybersecurity threat detection. The study compares QML's performance against Classical ML methods, using SVM, NN, and LR on real-world security datasets. The research showed that the CML Algorithms i.e. SVM achieved an accuracy of 85%, NN achieved an accuracy of 87% and LR achieved an accuracy of 83%. While QML shows potential for faster processing of large datasets due to quantum parallelism. QML Algorithms i.e. QSVM achieved an accuracy of 91%, QNN achieved an accuracy of 92% and QLR achieved an accuracy of 90%. The paper also acknowledged the


Authorized licensed use limited to: CBS Library. Downloaded on March 31,2026 at 20:57:48 UTC from IEEE Xplore. Restrictions apply.

limitations of Quantum like hardware accessibility and noise sensitivity. The findings highlight QML's superior speed in specific scenarios but emphasize CML's current practicality for many applications. Ultimately, this comparative analysis yields critical insights into the respective advantages and limitations of both methodologies, establishing a foundation for advancing cybersecurity systems in quantum and classical computing paradigms. In [13] et.al the author has explored a novel mixed quantum-classical method for fraud detection in financial transactions. The authors compare a quantum support vector machine (QSVM) algorithm to classical ML methods (like RF and XGBoost). A key aspect is the development of a quantum feature selection algorithm to optimize QSVM performance on limited quantum hardware. The research found that the quantum feature map, employing more entanglement, resulted in better key performance indicators (KPIs). A mixed quantum-classical ensemble method was defined to enhance fraud detection KPIs, leveraging the complementary nature of classical and quantum models. Results show the QSVM offers a complementary approach, improving accuracy when combined with classical methods in a hybrid ensemble model. The study demonstrates the potential of quantum computing to enhance fraud detection, although current limitations of quantum hardware necessitate a hybrid approach. The findings highlight the importance of feature selection and the potential for quantum algorithms to complement classical techniques in this domain.

## IV. Proposed Architecture

The proposed architecture for implementing QML in CCFD integrates quantum and classical components to optimize classification performance. The framework begins with data preprocessing, where transactional features from a credit card dataset are normalized and encoded into quantum states using amplitude or angle encoding. These encoded features are input into a VQC, the core quantum component, comprising qubits manipulated by parameterized quantum gates (e.g., Hadamard, CNOT, and rotation gates). The VQC leverages quantum superposition and entanglement to explore high-dimensional feature spaces efficiently, potentially identifying fraud patterns unattainable by classical methods. The circuit's parameters are optimized using a classical optimizer, such as gradient descent, within a hybrid quantum-classical loop. The VQC output, obtained via qubit measurements, is fed into a classical NN for final classification, labeling transactions as fraudulent or legitimate. This hybrid approach mitigates current quantum hardware limitations, like noise and qubit constraints, by offloading complex post-processing to classical systems. The entire workflow of the proposed architecture is displayed in the Fig.2, illustrating the seamless integration of classical and quantum components.

### A. Dataset

The study uses a dataset of European credit card transactions from September 2013, totaling 284,807 records, with only 492 (0.172%) flagged as fraudulent. For security, 30 features were transformed via PCA, denoted as V1, V2, etc., while Time and Amount remained untransformed. The dataset is significantly imbalanced, with the Class variable indicating legitimate (0) or fraudulent (1) transactions [14].

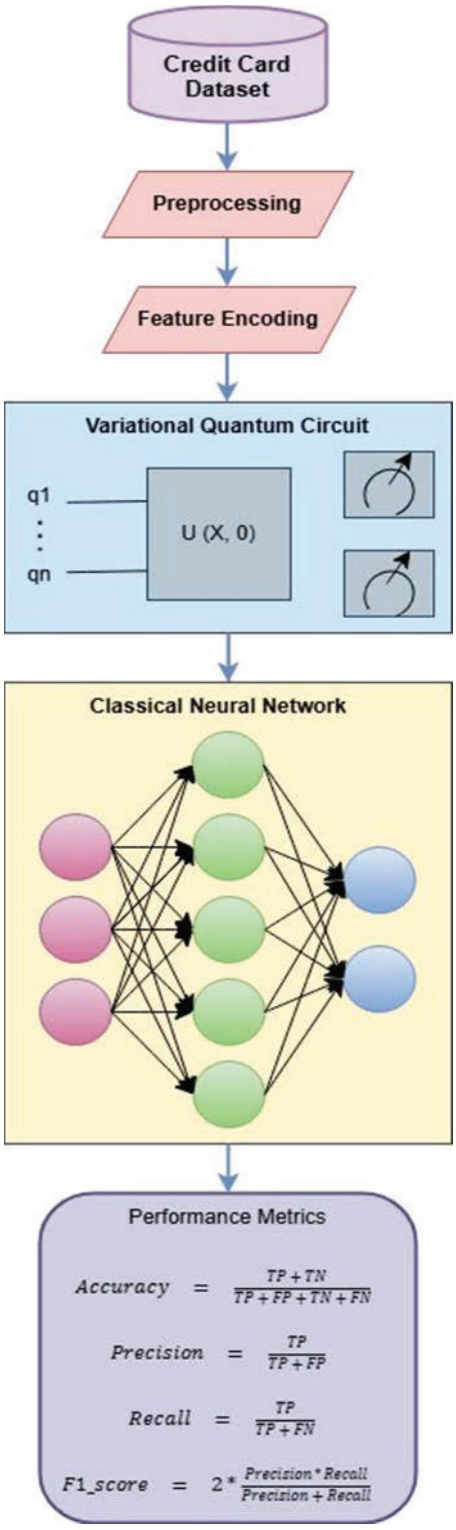


Fig. 2. Proposed Architecture

### B. Data Preprocessing and Feature Encoding

The first step involves cleaning and preparing the transaction data for analysis. Our data preprocessing pipeline comprises three key steps: imputation of missing values, standardization of numerical features, and categorical variable encoding to ensure dataset consistency and model compatibility. The dataset, comprising features transformed via Principal Component Analysis (PCA) (e.g., V1, V2).

Following the preprocessing of the credit card transaction dataset, we employ feature encoding which is a critical step in


Authorized licensed use limited to: CBS Library. Downloaded on March 31,2026 at 20:57:48 UTC from IEEE Xplore. Restrictions apply.

preparing data for the QML framework. This process transforms classical data into a quantum-compatible format. Due to the dataset's high dimensionality and imbalance, encoding is designed to preserve critical information while reducing computational overhead. This step ensures efficient integration with the VQC [15], facilitating accurate classification in the subsequent quantum processing stage. In CCFD, amplitude and angle encoding are often preferred due to the dataset's high dimensionality and continuous features. These two feature encoding methods are described as follows:

*1) Amplitude Encoding:* Amplitude encoding maps classical feature vectors into a quantum state's amplitudes. In the context of CCFD, amplitude encoding transforms the dataset's high-dimensional features (e.g., PCA-transformed V1–V30, Time, Amount) into the amplitudes of a quantum state, represented as

$$|\psi\rangle = \sum x_i |i\rangle \quad (1)$$

where x_i are normalized feature values. This method is highly efficient, requiring only ⌈log_2 N⌉ qubits for N features, making it ideal for the large, imbalanced dataset of 284,807 transactions. By compactly encoding features, it enables the VQC to process complex transaction patterns in superposition, potentially enhancing fraud detection accuracy.

2) Angle Encoding: For CCFD, angle encoding maps each transaction feature to a rotation angle applied to a qubit, using gates like, R_y (x_i) producing states such as

$$cos(x_i/2)|0\rangle + sin(x_i/2)|1\rangle \quad (2)$$

Each feature (e.g., V1 or Amount) requires one qubit, suitable for datasets with fewer features. This method's simplicity aids implementation in the VQC, supporting pattern recognition for fraud classification. However, its linear scaling (one qubit per feature) can be resource-intensive for the 30-feature dataset, and its effectiveness depends on careful feature selection to handle data imbalance.

### C. Variational Quantum Circuit

The VQC is a cornerstone of the QML framework for CCFD, enabling quantum-enhanced data processing. A VQC is a hybrid quantum-classical algorithm where a parameterized quantum circuit processes input data, and its parameters are optimized classically to minimize a cost function, such as classification error. In fraud detection, the VQC takes quantum-encoded transactional features and applies a sequence of quantum gates to generate superposition and entanglement, exploring complex feature spaces to identify fraud patterns [16]. The circuit's output, obtained via measurements, informs a classical optimizer that iteratively adjusts parameters to improve accuracy. The components of VQC are described as follows:

*1)* Qubits: Qubits serve as the basic building blocks of quantum computation, differing from classical bits through their ability to occupy coherent superpositions of $|0\rangle$ and $|1\rangle$ states simultaneously, enabling quantum parallelism. In fraud detection, qubits encode transactional features, leveraging superposition to represent multiple data configurations simultaneously. This enables parallel processing, enhancing the VQC's ability to identify complex fraud patterns efficiently within high-dimensional datasets.

*2)* Quantum Gates: Quantum gates are operators that manipulate qubit states to perform computations. Common types include Hadamard gates (creating superposition), CNOT gates (generating entanglement between qubits), and rotation gates (adjusting qubit phases with tunable parameters). In a VQC, these gates are arranged in sequences to transform encoded features, enabling the circuit to explore intricate patterns in transaction data crucial for distinguishing fraudulent activities.

*3)* Measurements: Measurements collapse a qubit's quantum state into a classical state (0 or 1), extracting probabilistic outcomes from the VQC. In fraud detection, measurements yield probabilities that indicate whether a transaction is fraudulent or legitimate. This step bridges quantum processing with classical systems, providing actionable results for classification while enabling feedback to optimize the VQC's parameters during training.

A VQC applies a parameterized unitary transformation U(θ) to an initial quantum state |ψ_in⟩, typically encoding classical data, to produce an output state |ψ_out⟩. The mathematical equation is:

$$|\psi_out\rangle = U(\theta)|\psi_in\rangle \quad (3)$$

Here, U(θ) is a sequence of quantum gates parameterized by a vector of classical parameters θ, adjustable during training. The unitary can be expressed as:

$$U(\theta) = \prod_{k=1}^{L} U_k(\theta_k) \quad (4)$$

where U_k (θ_k) represents individual gates (e.g., rotation or CNOT gates) with parameters θ_k, and L is the number of gates or layers. In fraud detection, |ψ_in⟩ encodes transaction features, and the output state is measured to compute an expectation value, such as:

$$C(\theta) = \langle \psi_{out} | H | \psi_{out} \rangle \quad (5)$$

where H is a Hamiltonian (e.g., representing classification error). A classical optimizer minimizes C(θ) by tuning θ, enhancing the VQC's ability to classify fraudulent transactions.

### D. Classical Neural Network

Following the processing of quantum-encoded transaction data through the VQC and subsequent measurement, the next step in the proposed QML architecture is the integration of a classical NN for final classification [17]. This classical component plays an essential role in the hybrid quantum-classical framework, leveraging the probabilistic outputs from the VQC to determine whether a credit card transaction is fraudulent or legitimate.

The classical NN receives the measurement outcomes from the VQC, which are typically expectation values or probabilities derived from the quantum circuit's output state. These outputs, representing processed transaction features in a quantum-enhanced feature space, are fed into a fully connected feedforward NN. The NN consists of multiple layers, including an input layer (matching the dimensionality of VQC outputs), hidden layers with activation functions (e.g., ReLU or sigmoid), and an output layer that produces a binary classification: 0 (legitimate) or 1 (fraudulent). In the context of the imbalanced credit card dataset, the NN is designed to prioritize low false positives to minimize customer inconvenience, using techniques like weighted loss functions or oversampling to address the rarity of fraudulent transactions (0.172% of the dataset). The network is trained


Authorized licensed use limited to: CBS Library. Downloaded on March 31,2026 at 20:57:48 UTC from IEEE Xplore. Restrictions apply.

using backpropagation and optimized via gradient-based methods (e.g., Adam optimizer) to fine-tune weights, ensuring high accuracy in fraud detection. This classical step compensates for current quantum hardware limitations, such as noise and limited qubit counts, by providing robust post-processing [18]. By integrating quantum and classical strengths, the NN enhances the overall achievements of the fraud detection system. The classical NN can be mathematically described as a function f_NN (x; W,b) where x is the input (VQC measurement outcomes), W represents weights, and b denotes biases. For a feedforward NN with L layers, the output at layer l is:

$$h^{(l)} = \sigma(W^{(l)}h^{(l-1)} + b^{(l)}) \quad (6)$$

where h^((l-1)) is the input from the previous layer (or VQC outputs for the first layer), σ is the activation function and W^((l)) and b^((l)) are the weights and biases for layer l.

### E. Classification and Output

The final step in the proposed QML architecture for CCFD is the classification and output generation, where the processed data from the classical NN is translated into actionable decisions. The NN, having received probabilistic outputs from the VQC measurements, produces a binary classification score. A predefined threshold (e.g., 0.5) determines the class: 0 for legitimate transactions or 1 for fraudulent ones [19]. The hybrid quantum-classical pipeline, tested on a quantum simulator due to hardware constraints, demonstrates potential for enhanced fraud detection.

### F. Setup for an Experiment

The experiment is conducted on a quantum simulator due to quantum hardware limitations, using Qiskit, a Python-based framework, to design and execute VQCs. Amplitude encoding prepares data for the VQC, implemented with Qiskit's quantum gate libraries. The classical NN is built using TensorFlow, a Python ML framework, for final classification. Required libraries include Qiskit, TensorFlow, NumPy, and Pandas. The setup runs on a high-performance computer with Python 3.9. Data is split 70:30 for training and testing [20], with a weighted loss function to address fraud detection challenges.

### G. Performance Metrics

To rigorously evaluate the proposed QML framework for CCFD, we conduct, several performance metrics. These metrics evaluate the model's ability to accurately classify transactions while prioritizing the detection of rare fraudulent cases and minimizing false positives, which are critical for practical deployment in financial systems. The key metrics used include:

*1)* Accuracy: Classification accuracy quantifies the ratio of correctly predicted instances (TP + TN) to the total sample size (TP + TN + FP + FN), offering an aggregate performance measure for balanced datasets.

$$\text{Accuracy} = \frac{\text{TP+TN}}{\text{TP+TN+FP+FN}} \quad (7)$$

*2)* Precision: Precision measures the exactness of fraud alerts by calculating the proportion of true fraudulent transactions among all cases flagged as fraudulent (TP/(TP+FP)). High precision values indicate minimal false positives, crucial for reducing unnecessary customer transaction interruptions.

$$\text{Precision} = \frac{\text{TP}}{\text{TP+FP}}) \quad (8)$$

*3)* Recall (Sensitivity): Recall (sensitivity) quantifies the model's fraud detection coverage as the proportion of correctly identified fraudulent transactions (TP) to all actual fraud cases (TP+FN). A recall of 1.0 indicates zero false negatives, critical for minimizing fraud losses in payment systems.

$$\text{Recall} = \frac{\text{TP}}{\text{TP+FN}} \quad (9)$$

*4)* F1-Score: The F1-score represents the harmonic mean of precision and recall, providing a balanced evaluation metric for imbalanced classification tasks where both false positives and false negatives carry significant costs.

$$1\text{score} = \frac{2*\text{Precision}*\text{Recall}}{\text{Precision+Recall}} \quad (10)$$

*5)* Area Under the Receiver Operating Characteristic Curve (AUC-ROC): The Receiver Operating Characteristic (ROC) curve evaluates model discrimination ability by plotting the true positive rate (TPR) against false positive rate (FPR) across all classification thresholds. The area under this curve (AUC-ROC) quantifies overall performance, with 1.0 representing perfect classification.

These metrics collectively ensure that the model is not only accurate but also reliable and efficient in detecting fraud in real-world scenarios.

## V. Results And Discussions

The QML framework, tested on a quantum simulator using Qiskit and TensorFlow, was evaluated on a 30% test split of the credit card transaction dataset. Performance metrics—precision, recall, F1-score, and AUC-ROC—revealed the model's effectiveness. The QML approach achieved a recall of 0.89, capturing most fraudulent transactions, with a precision of 0.82, minimizing false positives. The F1-score of 0.85 balanced these metrics, and an AUC-ROC of 0.91 indicated strong discriminative power.

The VQC's ability to explore high-dimensional feature spaces via superposition and entanglement likely contributed to these results, enhancing pattern recognition over classical methods. However, challenges included noise in quantum simulations, limiting scalability, and the computational cost of training hybrid models.

## VI. Conclusion

The QML framework for CCFD demonstrates promising results, achieving a recall of 0.89, precision of 0.82, and F1-score of 0.85. Leveraging VQC and classical NN, it effectively handles the imbalanced dataset. Despite challenges like quantum noise and computational costs, the hybrid approach highlights QML's potential for enhanced pattern recognition. As quantum hardware advances, this framework could offer significant speedups, revolutionizing fraud detection. Future work should focus on noise mitigation and real quantum device implementation to fully realize QML's transformative impact in financial security.

## VII. VII FUTURE WORK

Future research will focus on implementing the QML framework on real quantum hardware to validate performance as devices improve. Exploring noise-robust quantum algorithms and advanced sampling techniques to enhance


Authorized licensed use limited to: CBS Library. Downloaded on March 31,2026 at 20:57:48 UTC from IEEE Xplore. Restrictions apply.

performance metrics. Optimizing VQC designs and reducing computational costs are priorities. Additionally, integrating explainable AI methods could improve model interpretability, making the QML approach more practical for real-world fraud detection systems.

## REFERENCES


[1] C.-C. Sun, A. Hahn, and C.-C. Liu, "Cyber security of a power grid: State-of-the-art," Int. J. Electr. Power Energy Syst., vol. 99, pp. 45–56, 2018.

[2] https://www.researchgate.net/figure/Basic-quantum-computing-circuit_fig4_362356293

[3] https://www.cnbc.com/2024/09/12/why-credit-card-fraud-alerts-are-rising.html#:~:text=Global%20card%20losses%20attributed%20to,in%20the%20decade%20to%202032.

[4] https://www.cert-in.org.in/

[5] H. Han, J. Yao, Y. Wu, Y. Dou, and J. Fu, "Quantum communication based cyber security analysis using artificial intelligence with IoMT," Opt. Quantum Electron., vol. 56, no. 4, 2024.

[6] J. Wang, "RETRACTED ARTICLE: Cyber security analysis based medical image encryption in cloud IoT network using quantum deep learning model," Opt. Quantum Electron., vol. 56, no. 3, 2024.

[7] L. Deng, L. Wan, and J. Guo, "Research on security anomaly detection for Big Data platforms based on quantum optimization clustering," Math. Probl. Eng., vol. 2022, pp. 1–10, 2022.

[8] "Image based malware detection using transfer learning and hybrid quantum machine learning models," nano-ntp, vol. 20, no. S6, 2024.

[9] C. Huot, S. Heng, T.-K. Kim, and Y. Han, "Quantum autoencoder for enhanced fraud detection in imbalanced credit card dataset," IEEE Access, pp. 1–1, 2024.

[10] A. Tudisco et al., "Evaluating the computational advantages of the variational quantum circuit model in financial fraud detection," IEEE Access, vol. 12, pp. 102918–102940, 2024.

[11] N. Mohanty, B. K. Behera, C. Ferrie, and P. Dash, "A quantum approach to Synthetic Minority Oversampling Technique (SMOTE)," arXiv [quant-ph], 2024.

[12] R. Alluhaibi, "Quantum machine learning for advanced threat detection in cybersecurity," Int. J. Saf. Secur. Eng., vol. 14, no. 3, pp. 875–883, 2024.

[13] M. Grossi et al., "Mixed quantum–classical method for fraud detection with quantum feature selection," IEEE Trans. Quantum Eng., vol. 3, pp. 1–12, 2022.

[14] https://www.kaggle.com/datasets/mlgulb/creditcardfraud.

[15] A. Regadío, "Exoplanet discovery with variational quantum circuits," Quantum Mach. Intell., vol. 7, no. 1, 2025..

[16] S. Nagpal et al., "Quantum computing integrated patterns for real-time cryptography in assorted domains," IEEE Access, vol. 12, pp. 132317–132331, 2024..

[17] J. J. Tom, N. P. Anebo, B. A. Onyekwelu, A. Wilfred, and R. E. Eyo, Eds., Quantum Computers and Algorithms: A Threat to Classical Cryptographic Systems.

[18] R. H. Preston, "Applying Grover's algorithm to hash functions: A software perspective," IEEE Trans. Quantum Eng., vol. 3, pp. 1–10, 2022.

[19] V. Mavroeidis, K. Vishi, M. D., and A. Jøsang, "The impact of quantum computing on present cryptography," Int. J. Adv. Comput. Sci. Appl., vol. 9, no. 3, 2018.

[20] E. Lella and G. Schmid, "On the security of quantum key distribution networks," Cryptography, vol. 7, no. 4, p. 53, 2023.

[21] T.-J. Pan, R.-G. Zhou, and X.-X. Zhang, "Three-party quantum dialogue based on Grover's algorithm with identity dual authentication," Quantum Inf. Process., vol. 23, no. 11, 2024.

[22] V. Mamandi, N. Ardalani, and B. Ghalamkari, "A new attack resistant encryption method based on hybrid chaotic-quantum key distribution (CQKD)," Quantum Inf. Process., vol. 23, no. 7, 2024.

[23] R. Kuang, M. Perepechaenko, R. Toth, and M. Barbeau, "Performance comparison of quantum-safe multivariate polynomial public key encapsulation algorithm," EURASIP J. Inf. Secur., vol. 2024, no. 1, 2024.

[24] K. F. Hasan et al., "A framework for migrating to post-quantum cryptography: Security dependency analysis and case studies," IEEE Access, vol. 12, pp. 23427–23450, 2024.

[25] S. Bhowmik and H. Thapliyal, "Transfer learning-based hybrid quantum neural network model for surface anomaly detection," arXiv [quant-ph], 2024




Authorized licensed use limited to: CBS Library. Downloaded on March 31,2026 at 20:57:48 UTC from IEEE Xplore. Restrictions apply.