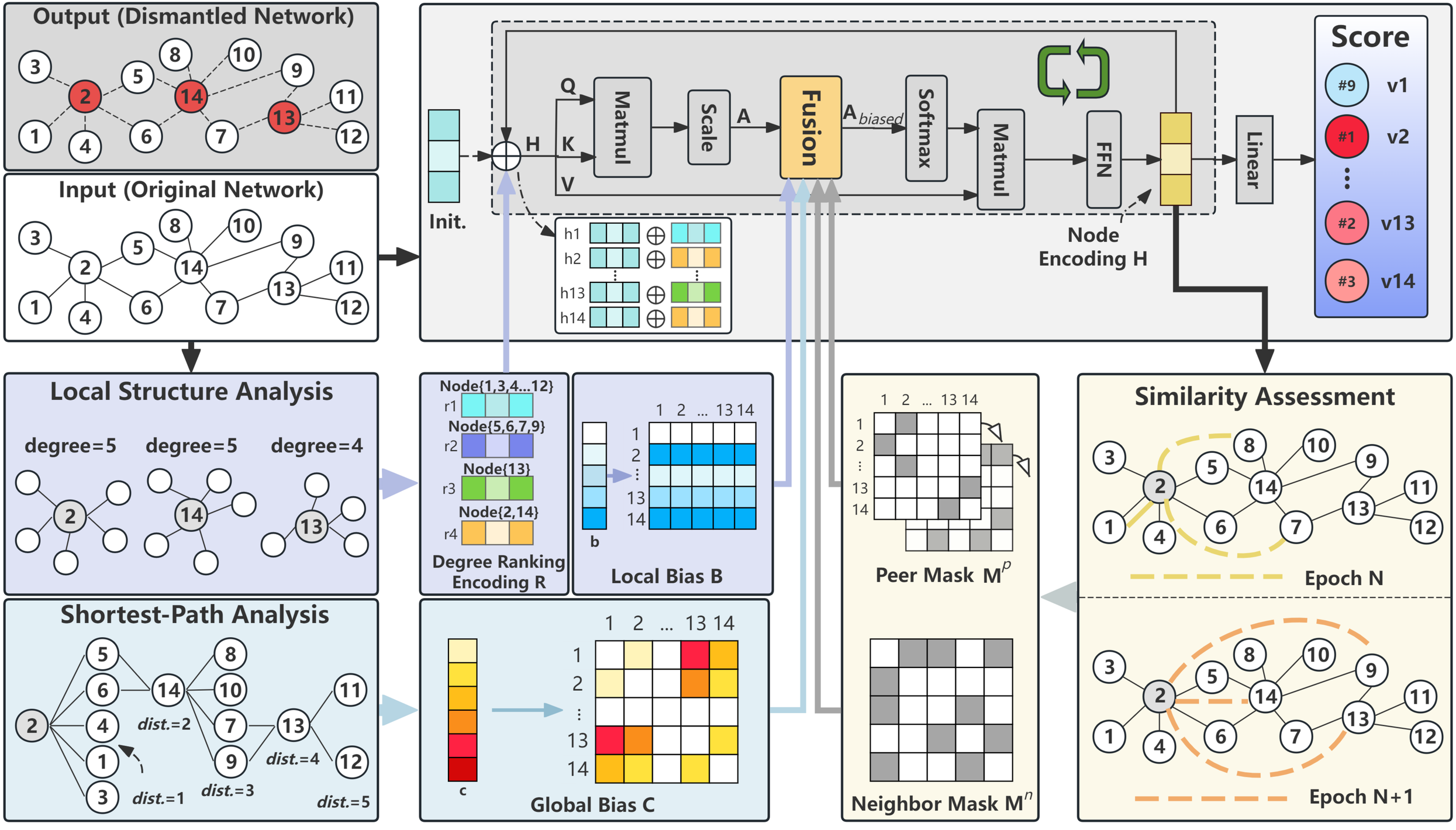
Output (Dismantled Network)
Input (Original Network)
Local Structure Analysis
degree=5
degree=5
degree=4
Shortest-Path Analysis
dist.=1
dist.=2
dist.=3
dist.=4
dist.=5
Init.
H
Q
K
V
Matmul
Scale
A
Fusion
A biased
Softmax
Matmul
FFN
Node Encoding H
Linear
Score
#9 v1
#1 v2
#2 v13
#3 v14
h1
h2
h13
h14
Node{1,3,4...12}
r1
Node{5,6,7,9}
r2
Node{13}
r3
Node{2,14}
r4
Degree Ranking Encoding R
b
Local Bias B
c
Global Bias C
Peer Mask M^p
Neighbor Mask M^n
Similarity Assessment
Epoch N
Epoch N+1