IOP Conference Series: Materials Science and Engineering

PURPOSE-LED PUBLISHING™

PAPER • **OPEN ACCESS**

Structural Analysis of Chassis using AISI 4130 and AA 7068

To cite this article: G V Arun *et al* 2021 *IOP Conf. Ser.: Mater. Sci. Eng.* **1059** 012034

View the article online for updates and enhancements.

You may also like

- Design and test on high-gap wheeled agricultural chassis for harvesting broccoli
Huimin Xu, Yijin Chen, Miaodan Hu et al.
- Static Structural Analysis of the Sports Utility Vehicles Patriot Chassis
W Aryadi, Kriswanto, A Roziqin et al.
- Anti-falling of wheeled humanoid robots based on a novel variable stiffness mechanism
Senyuan Lin, Hao Liu, Changchun Wu et al.

This content was downloaded from IP address 73.77.195.68 on 17/03/2026 at 05:27

Structural Analysis of Chassis using AISI 4130 and AA 7068

Arun G V[1], Kishore Kumar K[2], Velmurugan S[3]

[1,2] Mechanical Engineering, Bannari Amman Institute Of Technology, Sathyamangalam.
[3] Assistant Professor Level 2, Mechanical Engineering, Bannari Amman Institute Of Technology, Sathyamangalam.

E-mail: arungv.me19@bitsathy.ac.in,
kishorekumar.me19@bitsathy.ac.in,
vsvmurugan@gmail.com

Abstract.The chassis frame is the backbone of a vehicle to safely carry the maximum load for all the designed operating conditions. This paper describes the design and analysis of vehicle chassis using different materials for different cross sections. The main objective of this attempt is to reduce the self-weight of the chassis. In this work a truck chassis is taken for modeling and analysis. Two different alloy materials of steel and aluminium are considered for three different cross sections namely I, C and regular box type. SOLIDWORKS and ANSYS software are used for modeling and analysis of this work respectively.

Keywords: Chassis Design, Weight Reduction, Alloy Materials, Modeling and Analysis

1 Introduction

Automotive chassis is a skeletal frame on which various mechanical parts like engine, axle assemblies, brakes, steering and various other parts are bolted. The chassis is considered to be the most significant component of an automobile. It provides strength and flexibility to the automobile. Steel alloy AISI 4130 is the most commonly used material in the production of automotive chassis. In this work AA 7068[1-6] (aluminium alloy) is used as a replacement material for the chassis, even though the young's modulus of AISI 4130 is significantly higher than that of AA 7068, still it is taken for this work because of its cost reduction and weight reduction properties, which has similar physical properties to AISI 4130[7-13]. Three different cross sections namely I, C and Box type are analysed with these two materials in order to find the best suitable replacement for AISI 4130 in the aspects of strength, weight reduction and cost. For this work Eicher E2 truck's ladder chassis[14-23] is taken to find the equivalent stress and total deformation of the chassis. The total load applied on the chassis for analysis is 112270 N[15]. For modeling of the chassis SOLIDWORKS 2020 is used and for the purpose of analysing ANSYS R2 is used.

Content from this work may be used under the terms of the Creative Commons Attribution 3.0 licence. Any further distribution of this work must maintain attribution to the author(s) and the title of the work, journal citation and DOI.
Published under licence by IOP Publishing Ltd

2. Properties of Materials

The AA 7068 [1-6] is one of the strongest aluminium alloys with a yield strength of 590 MPa, poisson ratio of 0.23, young's modulus of 73.1 MPa, Ultimate strength of 641 MPa and density of 2.85 g/cm^3, used as a replacement for AISI 4130 [7-13] steel alloy with a yield strength of 460 MPa, poisson ratio of 0.29 young's modulus of 205 MPa, ultimate strength of 560 MPa and density of 7.85 g/cm^3. From the physical properties of these materials it is clearly understood that the density of AA 7068 is very low which will help in weight reduction.

Table1. Physical Properties of AA 7068 and AISI 4130

Properties	Materials	
	AA 7068	AISI 4130
Young's modulus(MPa)	73.1	205
Poisson ratio	0.23	0.29
Density (g/cm^3)	2.85	7.85
Yield strength (MPa)	590	460
Ultimate strength (MPa)	641	560

3. Modeling and Analysis

3.1 Modeling.

The ladder chassis of truck (Eicher E2) is modeled in solid works 2020 for the different cross sections namely I, C and box type are shown in the below figures.

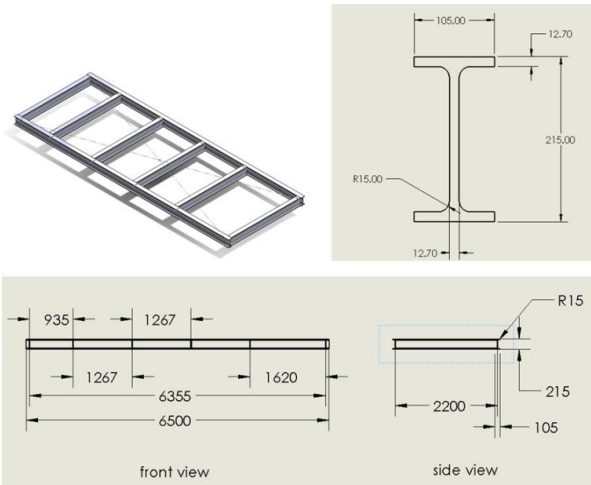

Figure 1: Modeling of I section

The above figure 1 shows the modeling of chassis using I cross section in solidworks, the dimensions of the model is given for reference.

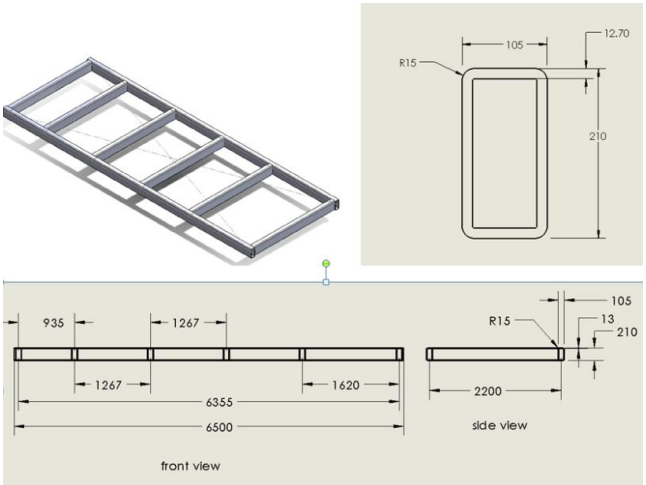

Figure 2: Modeling of Box Type Cross section

The above figure 2 shows the modeling of chassis using box type cross section in solidworks, the dimensions of the model is given for reference.

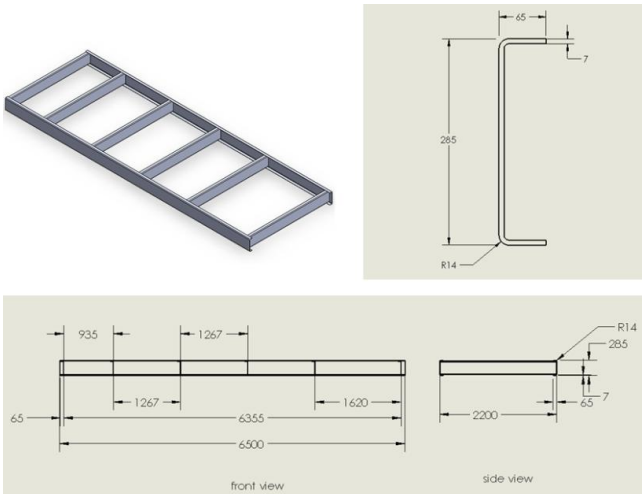

Figure 3: Modeling of C Type Cross section

The above figure 3 shows the modeling of chassis using C cross section in solidworks, the dimensions of the model is given for reference.

3.2 Analysis.

For the purpose of analysing the models,Ansys R2 is used, the solidworks file is imported into ansys in IGS format. Equivalent stress and total deformation is calculated for three different cross sections (I, C and Box type) using two different materials (AISI 4130 and AA 7068) to find the best material and cross section for the truck chassis. Second and fourth beam of the chassis is fixed and a load of 112270 N is applied on the chassis for analysis. For the purpose of analysis the load is considered to be static.

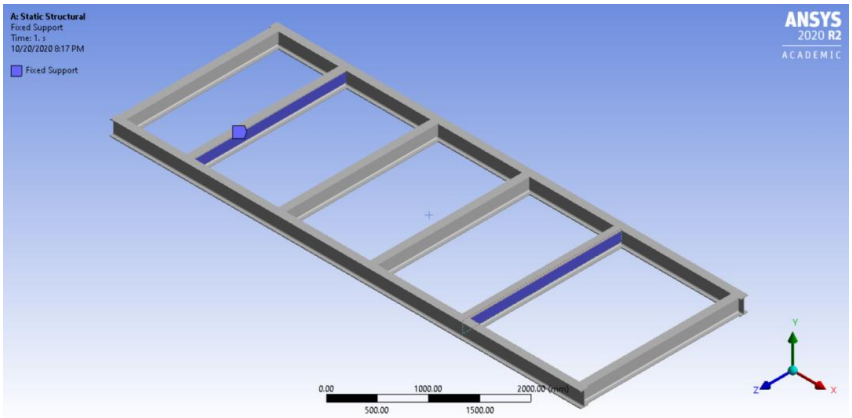

Figure 4: Fixed support

Figure 4 shows the fixed support of the chassis during analysis.

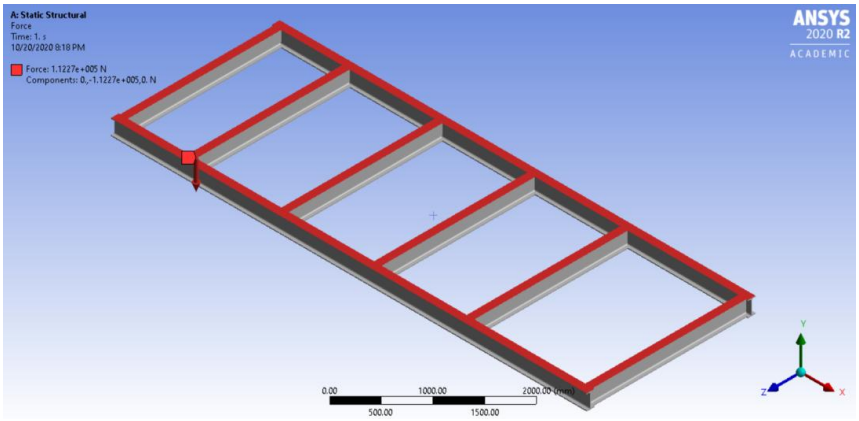

Figure 5: Load applied

Figure 5 shows where the load is applied on the chassis during analysis.

4. Result and Discussion

The result on analysing the chassis for different materials in different cross sections is given below.

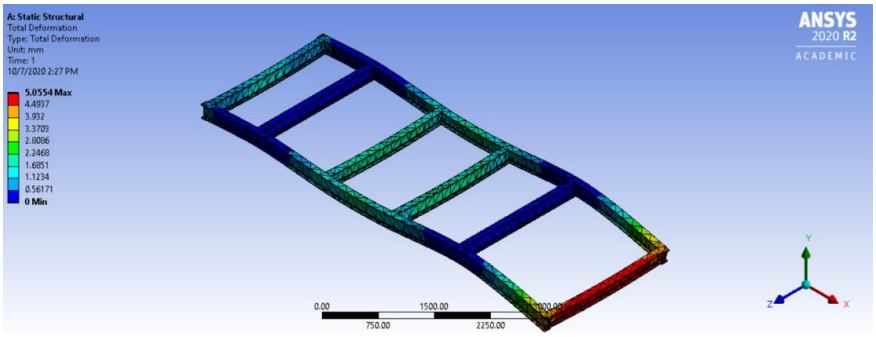

Figure 6: Deformation of AA 7068 – I section

The figure 6 shows the total deformation of chassis when the force is applied for AA 7068 in I cross section, the maximum deformation obtained is 5.0554 mm.

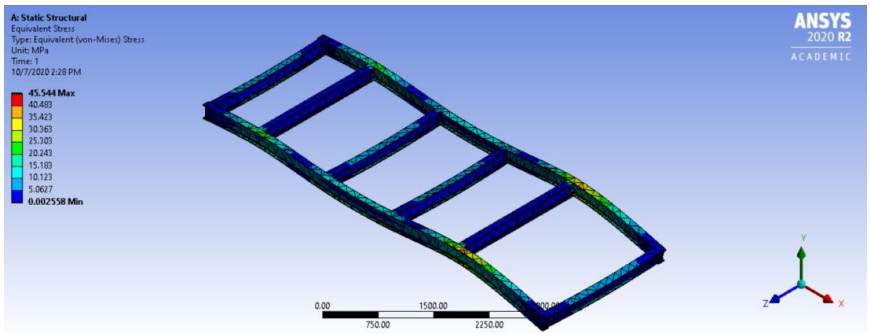

Figure 7: Equivalent stress (von-mises) of AA 7068 – I section

The figure 7 shows the stress deformation of chassis when the force is applied for AA 7068 in I cross section, the maximum stress value obtaines is 45.544 MPa.

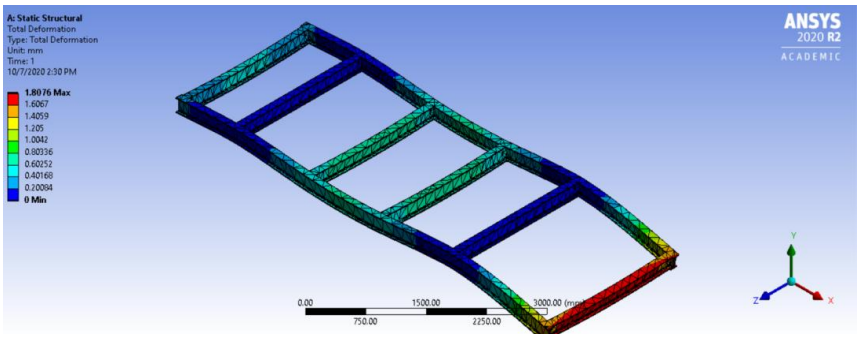

Figure 8: Deformation of AISI 4130 – I section

The figure 8 shows the total deformation of chassis when the force is applied for AISI 4130 in I cross section, the maximum deformation obtained is 1.8076 mm.

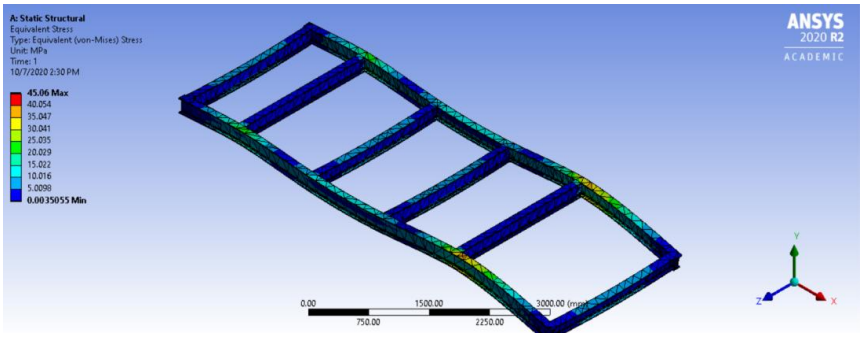

Figure 9: Equivalent stress (von-mises) of AISI 4130 – I section

The figure 9 shows the stress distribution of chassis when the force is applied for AISI 4130 in I cross section, the maximum stress value obtained is 45.06 MPa.

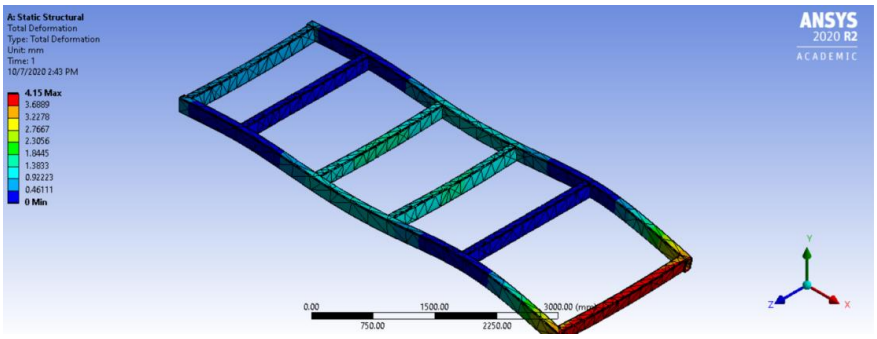

Figure 10: Deformation of AA 7068– Box type cross section

The figure 10 shows the total deformation of chassis when the force is applied for AA 7068 in box type cross section, the maximum deformation obtained is 4.15 mm.

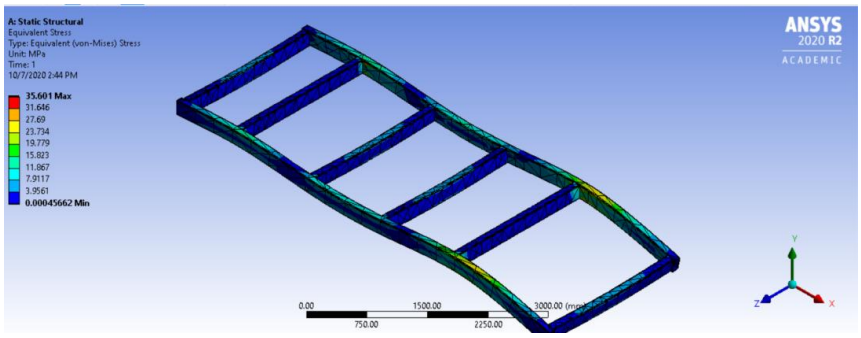

Figure 11: Equivalent stress (von-mises) of AA 7068 – Box type cross section

The figure 11 shows the stress distribution of chassis when the force is applied for AA 7068 in box type cross section, the maximum stress value obtained is 35.601 MPa.

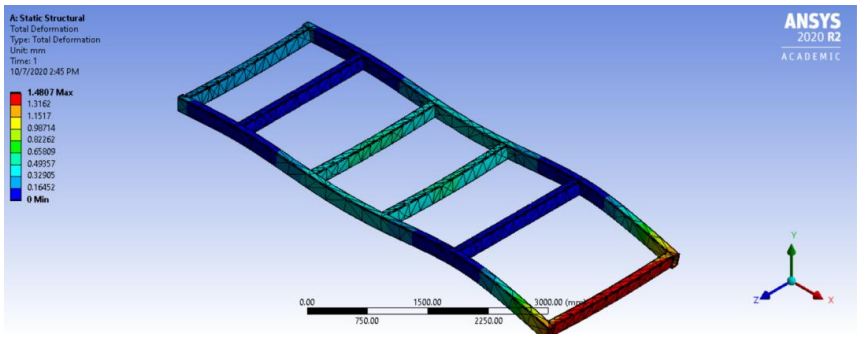

Figure 12: Deformation of AISI 4130– Box type cross section

The figure 12 shows the total deformation of chassis when the force is applied for AISI 4130 in Box type cross section, the maximum deformation obtained is 1.4807 mm.

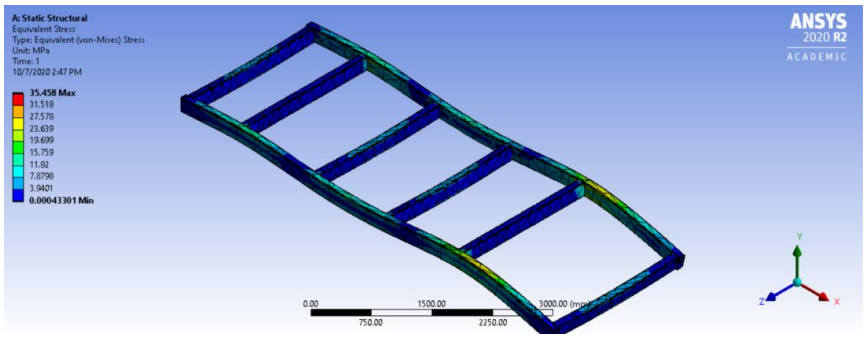

Figure 13: Equivalent stress (von-mises) of AISI 4130 – Box type cross section

The figure 13 shows the stress distribution of chassis when the force is applied for AISI 4130 in Box type cross section, the maximum stress value obtained is 35.458 MPa

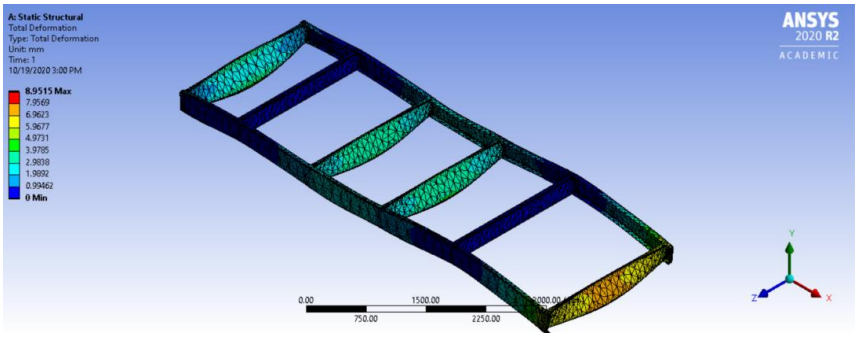

Figure 14: Deformation of AA 7068– C section

The figure 14 shows the total deformation of chassis when the force is applied for AA 7068 in C cross section, the maximum deformation obtained is 8.9515 mm.

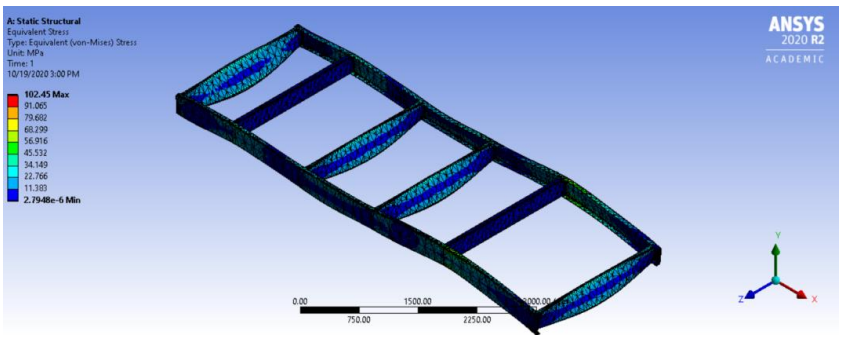

Figure 15: Equivalent stress (von-mises) of AA 7068 – C section

The figure 15 shows the stress distribution of chassis when the force is applied for AA 7068 in C cross section, the maximum stress value obtained is 102.45 MPa.

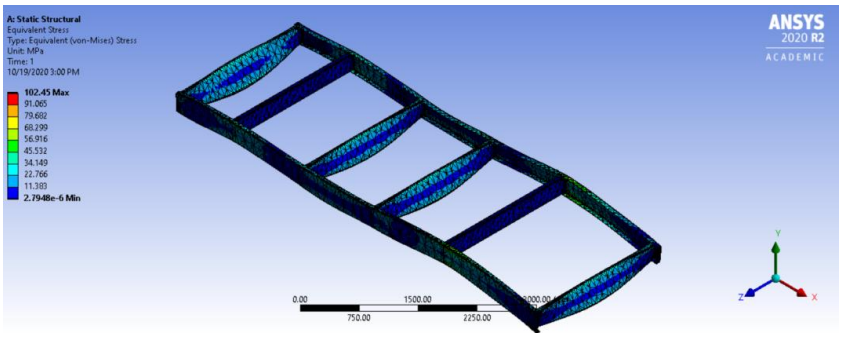

Figure 16: Deformation of AISI 4130– C section

The figure 16 shows the total deformation of chassis when the force is applied for AISI 4130 in C cross section, the maximum deformation obtained is 3.1999 mm.

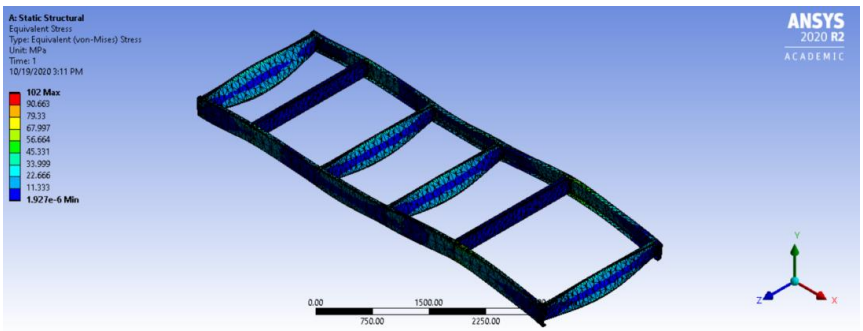

Figure 17: Equivalent stress (von-mises) of AISI 4130 – C section

The figure 17 shows the stress distribution of chassis when the force is applied for AISI 4130 in C cross section, the stress value obtained is 102 MPa.

By doing analysis in ansys the following results of total deformation, equivalent stress and weight of the chassis is obtained.

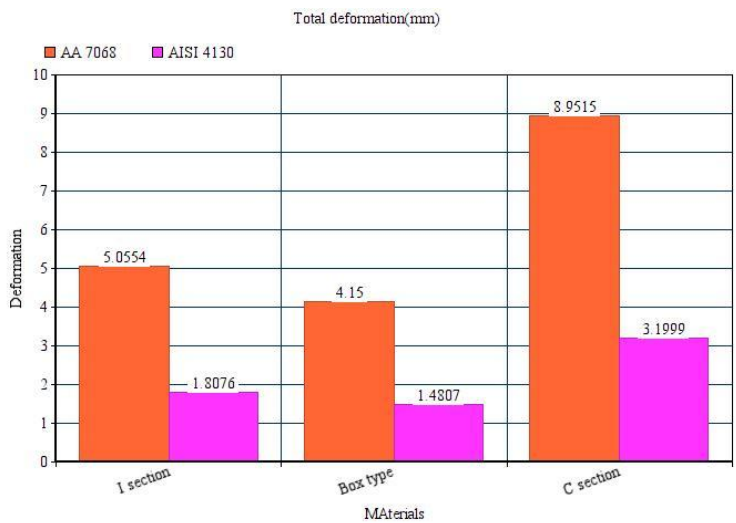

Figure 18: Total deformation of chassis

Table 2: Total deformation of chassis(mm)

Cross sections	Materials	
	AISI 4130	**AA 7068**
I section	1.8076	5.0554
Box type	1.4807	4.15
C section	3.1999	8.9515

The table 2 and figure18 shows the total deformation of the chassis in three different cross sections in both materials. From the graph it is clear that the steel alloy (AISI 4130) has lower deformation rate when compared to aluminium alloy. The box type cross section in aluminium alloy has lower deformation when compared to other cross sections in aluminium alloy.

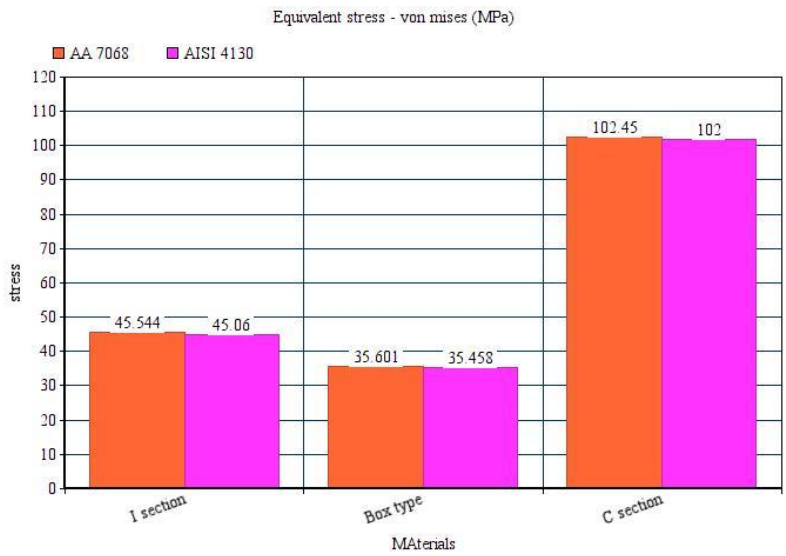

Figure 19: Equivalent stress – von mises

Table 3: Equivalent stress – von mises (MPa)

Cross sections	Materials	
	AISI 4130	**AA 7068**
I section	45.06	45.544
Box type	35.458	35.601
C section	102	102.45

The table 3 and figure 19 shows the equivalent stress – von mises on the chassis for different cross section in both materials, it is visible that the steel alloy (AISI 4130) has lower stress distribution when compared to AA 7068, but there is no significant difference.

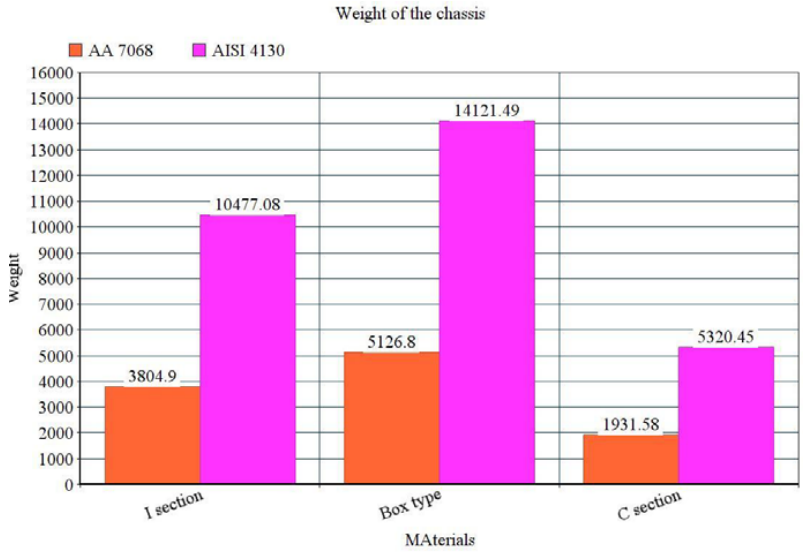

Figure 20: Weight of the chassis(kg)

Table 4: Weight of the chassis (kg)

Cross sections	Materials	
	AISI 4130	**AA 7068**
I section	10477.08	3804.9
Box type	14121.49	5126.8
C section	5320.45	1931.58

The figure 20 and table 4 shows the weight of the chassis, it is noticed that there is more than 50% weight reduction in AA 7068 (aluminium alloy) when compared to AISI 4130.

Conclusion

This paper explains about the design and analysis of chassis using different materials in different cross sections. It is proven that the AA 7068 has higher deformation when compared to AISI 4130, but still AA 7068 can be considered as a suitable replacement for steel alloy (AISI 4130) because it provides us with more than 50% of weight reduction, which will increase the efficiency of the vehicle considerably. Aluminum alloy (AA 7068) with box type cross section can be used as a replacement because it has less deformation (4.15mm) when compared to other cross sections in AA 7068, greater moment of inertia and it will be helpful in wire harness to organise the cables.

Future Scope

In this work, only the static load is taken into consideration and the load is considered to be uniformly distributed. For future works dynamic load can be taken into consideration and varying load distribution must be taken for analysis.

References

[1] Amin Azimi, Ali Shokuhfar Omid Nejadseyfi, Hamid Fallahdoost and Seid Salehi 2015, Optimizing consolidation behavior of Al 7068−TiC Nano composites using Taguchi statistical analysis. *Transaction of Nonferrous Metals Society of China* **25 :** 2499−2508.

[2] Mohammed Javad Ghasemi, Mohammed Silani, Ali Maleki and Mostafa Jamshidian 2020, Micromechanical simulation and experimental investigation ofAluminum - based Nano composites. *Defence Technology.* https://doi.org/10.1016/j.dt.2020.03.010.

[3] Madhusudhan M, G J Naveen and K Mahesha 2016, Mechanical Characterization of AA7068-ZrO2 reinforced MetalMatrix Composites. *Materials Today Proceedings* **4 :** 3122–3130.

[4] LushaTian, YongchunGua, Jianping Li, Jianli Wang, HongboDuan, Feng Xia, Minxian Liang 2018, Elevated re-aging of a piston aluminium alloy and effect on the microstructure and mechanical properties. *Materials Science & Engineering A* **738** : 375-379.

[5] F. Hughes, A. Prudom and G. Swallowe 2013, The high strain-rate behaviour of three molecular weights of polyethylene examined with a magnesium alloy split-Hopkinson pressure bar. *Polymer Testing* **32(5) :** 827-834.

[6] Julia Osten, Benjamin Milkereit, Michael Reich, Bin Yang, Armin Springer, Karina Nowak and Olaf Kessler 2020, Development of Precipitation Hardening Parameters for High Strength Alloy AA 7068. *Materials 2020* **13(4) :** 918.

[7] ShwetankAvikal, AtulBisht, Devender Sharma, HimanshuHindwan, SiddharthYadav, K.C. Nithin Kumar and Padmanabh Thakur 2020, Design and fatigue analysis of front axle beam of a heavy duty truck using ansys. *Materials Today : Proceedings* **26(2)** : 3211-3215.

[8] Y Reda, A M El-Shamy and Ashraf K Eessaa 2018, Effect of hydrogen embrittlement on the microstructures of electroplated steel alloy 4130. *Ain Shams Engineering Journal* **9(4)** : 2973-2982.

[9] Matthew Connolly, May Martin, Peter Bradley, Damian Lauria, Andrew Slifka, Robert Amaro, Christopher Looney and Jun-Sang Park 2019, In situ high energy X-ray diffraction measurement of strain anddislocation density ahead of crack tips grown in hydrogen. *Acta Materialia* **180 :** 272-286

[10] D. B. Kececioglu and L B Chester 1976, Combined Axial Stress Fatigue reliability for AISI 4130 and 4340 steel. Journal of Manufacturing Science and Engineering **98(1)** : 153-160

[11] Li Fan, Hai-yan Chen, Yao-hua Dong, Li-hua Dong and Yan-sheng Yin 2018, Wear and corrosion resistance of laser-cladded Fe-based composite coatings on AISI 4130 steel. *International Journal of Minerals, Metallurgy and Materials* **25** : 716-728

[12] A. Kumar and P.P. Patil 2017, Free vibration and connecting boltconstraint-based FEA analysis ofheavy vehicle medium dutyTransmission gearbox housingmade from AISI 4130 alloy material. *Mathematics Applied to Engineering* 133-146.

[13] Zhipeng Pan, YixuanFeng, Xia ji and Steven Y. Liang 2017, Turning Force Prediction of AISI 4130 Considering Dynamic Recrystallization. *International Manufacturing Science and Engineering Conference*

[14] Mohamed Sithik M, Vallurupalli R., Lin B and Sudalaimuthu S. 2014, Simplified Approach of Chassis Frame Optimization forDurability Performance. *Technical Papers*

[15] Hidaitulla Mangole 2017, Cross-Section and Material optimization of an automotive chassis using FEA

[16] B. Stalin, M. Ravichandran, C. Ramesh Kannan and K. SathiyaMoorthi 2019, Design and Analysis of Stringer on the Chassis Frame in Load Carrying vehicle. *Advances in Manufacturing Technologies*

[17] Jessica GissellaMaradeyLázaro,HelioSneyder Esteban Villegas,Braulio José Blanco Caballero 2018, Finite Element Analysis (Fea) For Optimization The Design Of A Baja Sae Chassis. *ASME International Mechanical Engineering Congress and Exposition*

[18] Barry (Baizhong) Lin 2013, A New Method of d'Alembert's Principle Finite Element Based Fatigue Calculation with Input ofLoads and Accelerations. *Technical papers*

[19] Fang LIU, Jinwen DONG and Yongzhi JING 2012, Structure analysis of levitation chassis of medium-to-low speed maglev vehicles based on left-right decoupling**.** *Journal of Modern Transportation* **20** : 82-87.

[20] MohdAzizi Muhammad Nora, HelmiRashida, Wan MohdFaizul Wan Mahyuddinb, MohdAzuanMohdAzlanc and Jamaluddin Mahmud 2012, Stress Analysis of a Low Loader Chassis. *Procedia Engineering* **41** : 995 – 1001.
[21] R. V. Patil, J. U. Marathe, A.P.Tadamalle, Dr. Y. P. Reddy 2016, Optimization of Tractor Trolley Chassis Using Orthogonal Array Method. *Material Today : Proceedings* **4(8)** : 8796–8805.
[22] Yuan Ren, Yongchang Yu, Binbin Zhao, Chuanhui Fan, He Li2016 Finite Element Analysis and Optimal Design for the Frame of SX360 Dump Trucks. *Procedia Engineering* **174** : 638 – 647.
[23] Antonio Flavio Aires Rodrigues, André Luis Rosa Poncio, André Cervieri, Luiz Carlos Gertz, Moisés Da SiluePeraira, Goessling Silva Pereira and Anderson Bonsanto Oliveira 2015, Comparative Analysis of Torsional Rigidity of a Chassis of an Automotive Prototype Obtained by Numerical Analysis and Experimenta. *Technical Papers*