# Design of a Custom Linux-Capable Mini PC using Raspberry Pi Compute Module 5

**A. Vamsi Krishna (MT2025532)**
Vamsi.Krishna@iiitb.ac.in
IIIT-Bangalore
Project Link

***Abstract*—The growing demand for compact embedded computing systems has accelerated the development of custom Linux-capable platforms for edge computing, IoT, industrial automation, and portable desktop-class applications. This project presents the complete design and implementation of a custom mini PC carrier board based on the Raspberry Pi Compute Module 5 (CM5) using a hierarchical KiCad-based hardware design methodology emphasizing modular subsystem abstraction, practical manufacturability, Linux deployment capability, and scalable embedded computing.**

**The proposed architecture transforms the CM5 into a standalone Linux-capable mini PC by integrating USB-C power and communication, HDMI display output, microSD-based Linux boot architecture, custom multi-voltage power regulation, and optimized PCB implementation. Unlike conventional off-the-shelf Raspberry Pi systems, this work focuses on engineering a dedicated custom carrier board that preserves CM5 computational capabilities while enabling hardware-level customization, subsystem scalability, and deployment-specific design flexibility.**

**Significant emphasis is placed on practical engineering implementation including compute subsystem integration, USB and HDMI interface realization, Linux operating system boot enablement, power-domain partitioning, signal routing optimization, and compact PCB realization. The final implementation demonstrates how a custom CM5 carrier board can serve as a deployable Linux computing platform suitable for embedded systems, educational development, edge computing, and future AI-integrated applications.**

***Index Terms*—Raspberry Pi CM5, Mini PC, Linux Embedded System, KiCad, Custom Carrier Board, HDMI, USB-C, PCB Design, Embedded Computing**

## I. Introduction

The rapid evolution of embedded systems has significantly increased the demand for compact, power-efficient, and Linux-capable computing platforms that can bridge the gap between traditional desktop systems and dedicated embedded hardware. Modern applications including IoT gateways, edge computing nodes, robotics controllers, educational platforms, and industrial automation systems increasingly require flexible hardware architectures that combine computational capability with custom hardware integration.

Traditional single-board computers (SBCs) such as standard Raspberry Pi platforms provide accessible Linux computing environments but often impose limitations in subsystem customization, deployment-specific hardware optimization, and PCB-level engineering flexibility. For specialized applications, a custom carrier board architecture provides superior design control by enabling subsystem-specific integration while preserving computational performance.

The Raspberry Pi Compute Module 5 (CM5) provides an ideal foundation for such a platform by integrating processing, RAM, wireless communication, and Linux support into a compact embedded module. However, practical deployment requires a dedicated hardware ecosystem capable of supporting storage, display, communication, and power management.

This project presents the complete design and implementation of a custom Linux-capable mini PC using Raspberry Pi CM5. The system integrates:

- Raspberry Pi CM5 compute core
- USB-C power and communication
- HDMI display subsystem
- microSD Linux boot architecture
- Custom 5V/3.3V/1.8V power regulation
- Hierarchical KiCad schematic methodology
- Manufacturable PCB implementation
- Compact mini PC deployment capability

Unlike conventional SBC deployment, this work emphasizes engineering a complete custom embedded motherboard capable of transforming the CM5 into a scalable Linux mini PC platform through practical hardware realization.

### A. Engineering Contributions

The primary novelty of this work lies not in merely using Raspberry Pi CM5, but in engineering a custom deployable Linux computing platform through dedicated carrier board realization. Major engineering contributions include:

- Custom CM5 carrier board instead of standard SBC deployment
- Hierarchical KiCad-based hardware abstraction
- Linux-capable embedded ecosystem realization
- Multi-voltage power subsystem engineering
- HDMI, USB-C, and storage interface integration
- Manufacturable PCB design with practical deployment focus

This transforms the project from a conventional development-board implementation into a custom embedded computing platform with deployment-specific scalability.

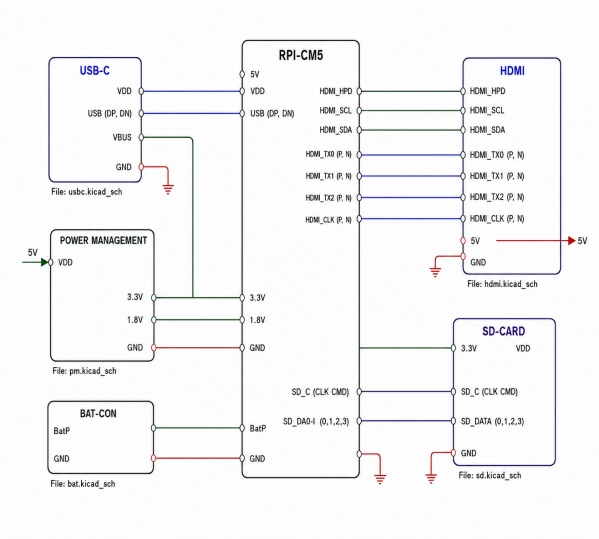


Fig. 1: Hierarchical Root Schematic

## II. System Design

### A. Overall System Architecture

The proposed mini PC architecture consists of four major subsystems:

1) Raspberry Pi CM5 Compute Core
2) USB-C Power and Communication Interface
3) HDMI Display Output Subsystem
4) microSD Linux Boot and Storage Architecture

The complete design was implemented using hierarchical KiCad schematic abstraction to improve modularity, maintainability, subsystem debugging, and scalable PCB realization. Rather than implementing the system as a monolithic design, hierarchical partitioning enables structured hardware abstraction where each subsystem can be independently developed, validated, and integrated.

This methodology significantly improves engineering workflow while also enabling future subsystem upgrades such as additional I/O expansion, thermal optimization, or AI hardware integration.

### B. System Block Diagram

The functional system workflow of the proposed architecture can be summarized as:

$$USB\text{-}C \rightarrow Power\ Regulation \rightarrow CM5 \rightarrow HDMI/USB \tag{1}$$

This block-level abstraction highlights the power-to-compute-to-interface design philosophy used throughout implementation.

### C. Raspberry Pi Compute Module 5 Integration

The Raspberry Pi CM5 serves as the central computational subsystem of the proposed mini PC platform. It integrates processor, memory, wireless communication, and Linux support within a compact modular architecture.

Key features include:

- Linux operating system compatibility
- Integrated RAM architecture
- Wi-Fi and BLE connectivity
- Compact embedded design
- GPIO and peripheral expansion capability
- Scalable deployment flexibility

By leveraging the CM5 rather than a traditional SBC board, the proposed design enables full computational capability while allowing custom hardware-level engineering. This significantly improves platform adaptability for deployment-specific applications.

### D. USB-C and HDMI Interface

USB-C serves as the primary power input and communication subsystem, providing a modern standardized interface for reliable system deployment. HDMI provides external monitor compatibility, enabling desktop-class Linux system visualization.

The HDMI subsystem supports:

- Differential display signaling
- Clock and data routing
- Hot-plug detection
- Display communication
- External monitor compatibility

Together, these interfaces transform the hardware platform from a compute module carrier into a practical standalone Linux mini PC.

Unlike conventional Raspberry Pi SBC deployment, the proposed design provides deployment-specific hardware customization, modular scalability, and custom manufacturable embedded system realization.

### E. Linux Boot Architecture and OS Deployment

A major engineering objective of the project is enabling complete Linux operating system deployment on the Raspberry Pi CM5 through external storage architecture. Unlike conventional desktop systems, Raspberry Pi platforms do not operate with a preloaded Linux environment by default. Instead, the operating system must first be installed onto a bootable storage medium such as a microSD card or SSD.

Linux deployment is performed using Raspberry Pi Imager, which flashes Raspberry Pi OS or Ubuntu Linux onto the storage device by writing the required boot files, firmware, kernel image, and root filesystem. This process effectively "dumps" the operating system image onto storage in a bootable format compatible with Raspberry Pi hardware.

The Linux installation workflow can be summarized as:

$$Raspberry\ Pi\ Imager \rightarrow microSD/SSD \rightarrow Bootable\ Linux \tag{2}$$

Once powered on, the CM5 bootloader reads the boot files from the storage medium, initializes firmware, configures memory and peripheral interfaces, loads the Linux kernel into RAM, and launches the operating system.

The Linux boot workflow consists of sequential initialization stages:

$$\begin{aligned} \text{Bootloader} &\rightarrow \text{Firmware} \\ &\rightarrow \text{Linux Kernel} \\ &\rightarrow \text{Device Tree} \\ &\rightarrow \text{Root Filesystem} \end{aligned} \tag{3}$$

In simple terms:

- **Raspberry Pi Imager:** Writes Linux onto storage
- **Bootloader:** Reads and initializes boot files
- **Kernel:** Loads and controls hardware resources
- **Root Filesystem:** Launches the complete Linux environment

This subsystem is particularly important because it transforms the proposed hardware platform from a custom PCB implementation into a fully operational Linux-capable mini PC suitable for desktop operation, embedded deployment, and software scalability.

### *F. Power Management*

Reliable power architecture is essential for stable Linux-capable embedded operation. Since the platform integrates compute, storage, display, and communication subsystems, stable multi-voltage regulation is critical for boot reliability and peripheral compatibility.

The design integrates:

- USB-C 5V primary input
- 3.3V regulated subsystem for SD and interface logic
- 1.8V support rail for low-voltage peripheral requirements
- Multi-domain power distribution
- Stable peripheral supply hierarchy

A structured regulator hierarchy ensures voltage compatibility across subsystem domains while minimizing instability during Linux boot initialization. Proper voltage sequencing is particularly important because storage, firmware loading, and interface initialization depend on stable supply conditions.

This power architecture significantly improves deployment reliability by ensuring that compute, storage, and communication domains operate under consistent electrical conditions.

### *G. PCB Design Considerations*

PCB implementation was carefully optimized to balance compact form factor, manufacturability, and subsystem routing integrity.

Key considerations include:

- Compact component placement for mini PC realization
- Logical subsystem partitioning
- USB-C and HDMI routing practicality
- Mounting-hole mechanical stability
- Bottom-layer routing optimization
- Future hardware scalability

These considerations ensure the design is not merely functional but also practical for deployment, assembly, and future expansion.

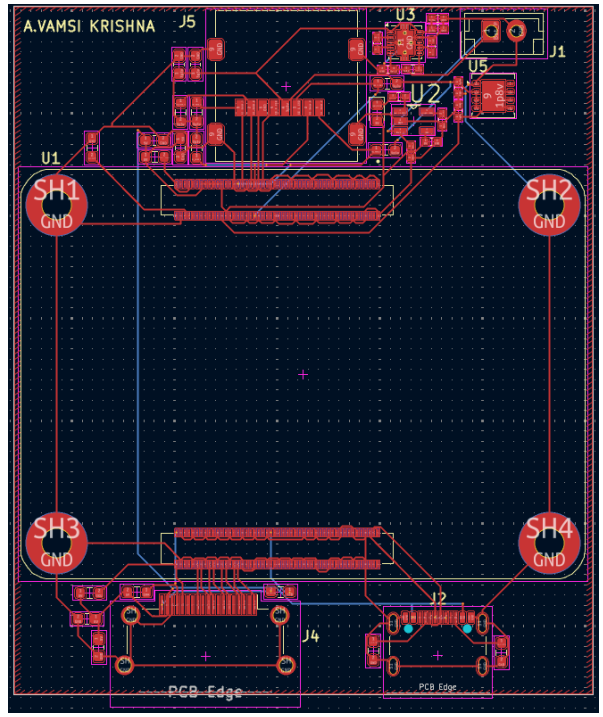


Fig. 2: PCB Layout

## III. Results

The complete custom Linux-capable mini PC platform was successfully implemented using KiCad schematic development, PCB layout design, and 3D hardware visualization. The final implementation demonstrates practical subsystem integration, hardware manufacturability, Linux deployment readiness, and compact embedded platform realization.

The PCB layout demonstrates optimized subsystem partitioning, compact component placement, practical routing, and deployment-focused hardware organization.

Functional outcomes include:

- Hierarchical schematic architecture realization
- Functional Raspberry Pi CM5 carrier board deployment
- Linux boot-capable embedded system platform
- HDMI display subsystem integration
- USB-C and microSD deployment
- Manufacturable compact PCB realization

### *A. Applications*

The proposed platform can support multiple practical deployment domains including:

- Edge computing node
- IoT gateway
- Robotics controller
- Educational Linux workstation
- Embedded development platform

This broadens the relevance of the project beyond prototype hardware into practical embedded deployment.

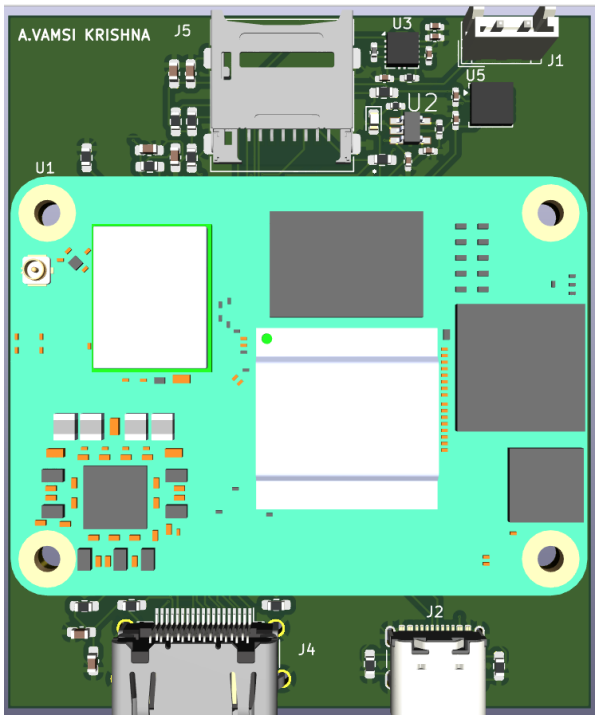


Fig. 3: Top View of the 3D Model

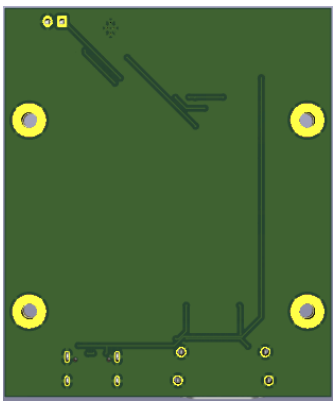

Fig. 4: Bottom View of the 3D Model

## IV. Conclusion

This work presented the complete design and implementation of a custom Linux-capable mini PC using Raspberry Pi Compute Module 5 through hierarchical KiCad-based hardware development methodology.

The proposed platform successfully integrates compute, power, storage, display, and Linux boot architecture into a unified custom carrier board. Unlike conventional Raspberry Pi deployment approaches, this project emphasizes engineering-focused motherboard realization that prioritizes subsystem customization, PCB manufacturability, Linux deployment capability, and scalable embedded design.

The project demonstrates that Raspberry Pi CM5 can be effectively transformed into a dedicated Linux-capable mini PC platform through practical hardware engineering while maintaining flexibility for future deployment in embedded systems, edge computing, educational development, and advanced AI-integrated architectures.

## V. Future Scope

Future improvements can focus on enhancing performance, scalability, and deployment versatility of the proposed Linux-capable mini PC platform.

- **Thermal Management:** Integration of heatsinks, cooling fans, or thermal-aware PCB design can improve sustained performance and reduce thermal throttling under extended workloads.
- **AI and Edge Acceleration:** External TPU/NPU or PCIe/USB-based AI modules can enable machine learning, computer vision, and edge-computing applications.
- **Multi-USB and GPIO Expansion:** Additional USB hubs and GPIO interfaces can improve peripheral connectivity for IoT, robotics, and embedded system development.