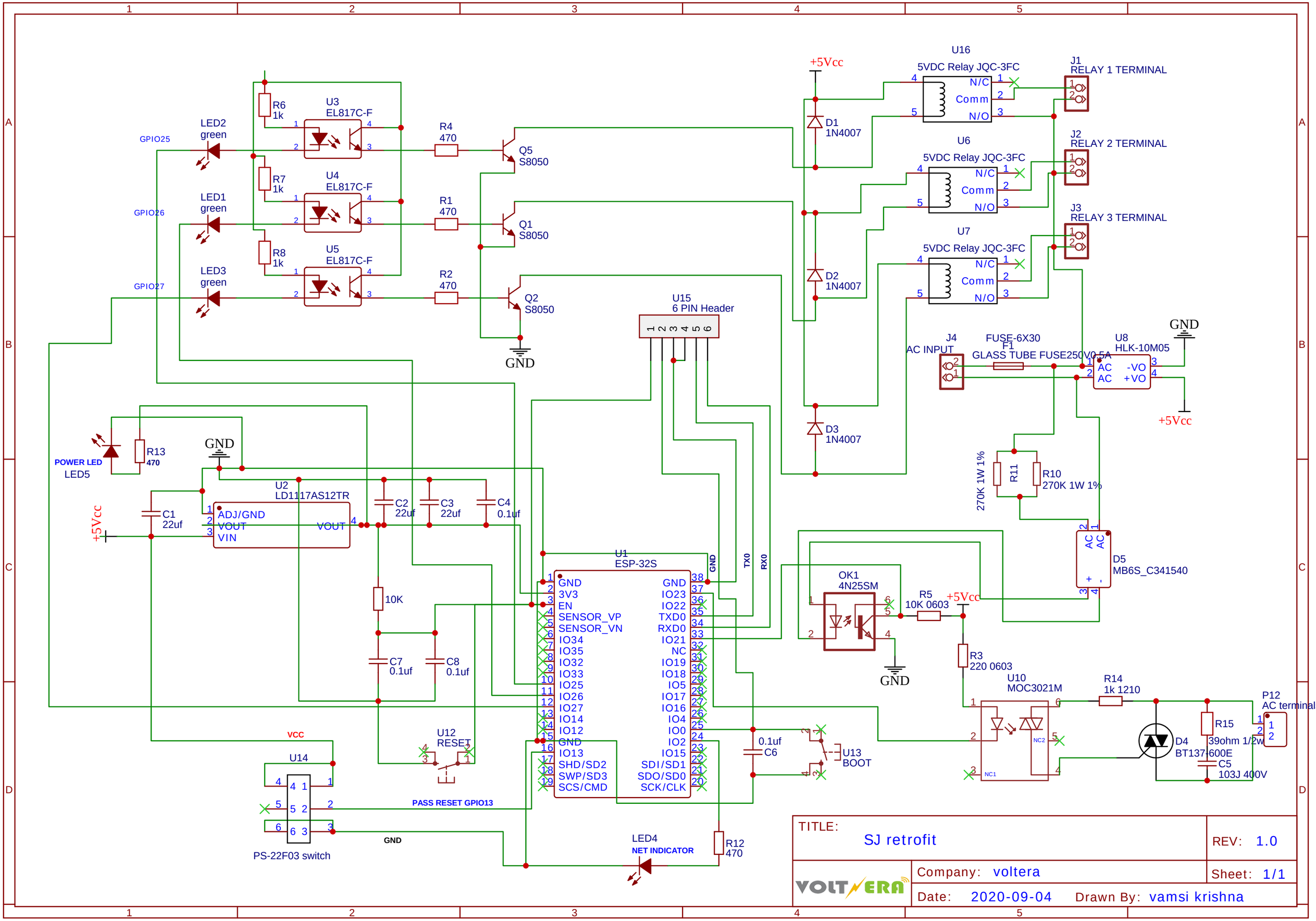
LED2
green
GPIO25
LED1
green
GPIO26
LED3
green
GPIO27
R6
1k
R7
1k
R8
1k
U3
EL817C-F
U4
EL817C-F
U5
EL817C-F
R4
470
R1
470
R2
470
Q5
S8050
Q1
S8050
Q2
S8050
GND
+5Vcc
D1
1N4007
D2
1N4007
D3
1N4007
U16
5VDC Relay JQC-3FC
U6
5VDC Relay JQC-3FC
U7
5VDC Relay JQC-3FC
N/C
Comm
N/O
J1
RELAY 1 TERMINAL
J2
RELAY 2 TERMINAL
J3
RELAY 3 TERMINAL
U15
6 PIN Header
J4
AC INPUT
FUSE-6X30
F1
GLASS TUBE FUSE250V0.5A
U8
HLK-10M05
AC
AC
-VO
+VO
POWER LED
LED5
R13
470
U2
LD1117AS12TR
ADJ/GND
VOUT
VIN
C1
22uf
C2
22uf
C3
22uf
C4
0.1uf
10K
C7
0.1uf
C8
0.1uf
U1
ESP-32S
GND
3V3
EN
SENSOR_VP
SENSOR_VN
IO34
IO35
IO32
IO33
IO25
IO26
IO27
IO14
IO12
GND
IO13
SHD/SD2
SWP/SD3
SCS/CMD
GND
IO23
IO22
TXD0
RXD0
IO21
NC
IO19
IO18
IO5
IO17
IO16
IO4
IO0
IO2
IO15
SD1/SD1
SDO/SD0
SCK/CLK
TX0
RX0
270K 1W 1%
R11
R10
270K 1W 1%
D5
MB6S_C341540
OK1
4N25SM
R5
10K 0603
R3
220 0603
U10
MOC3021M
R14
1k 1210
D4
BT137-600E
R15
39ohm 1/2w
C5
103J 400V
P12
AC terminals
0.1uf
C6
U13
BOOT
U12
RESET
VCC
U14
PS-22F03 switch
PASS RESET GPIO13
LED4
NET INDICATOR
R12
470
TITLE:
SJ retrofit
REV: 1.0
Company: voltera
Sheet: 1/1
Date: 2020-09-04
Drawn By: vamsi krishna

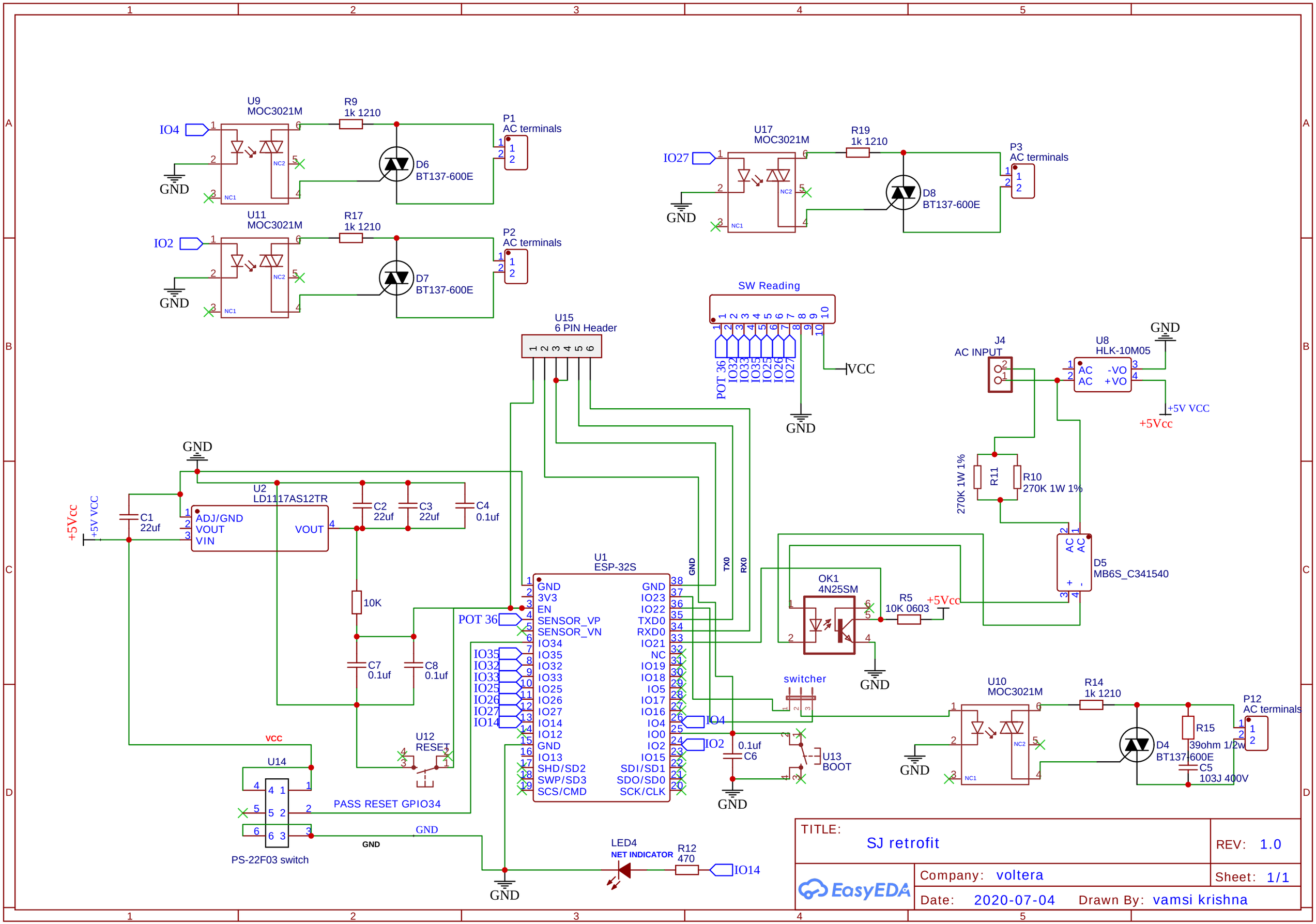
U9
MOC3021M
R9
1k 1210
P1
AC terminals
IO4
GND
D6
BT137-600E
U11
MOC3021M
R17
1k 1210
P2
AC terminals
IO2
GND
D7
BT137-600E
U17
MOC3021M
R19
1k 1210
P3
AC terminals
IO27
GND
D8
BT137-600E
SW Reading
POT 36
IO32
IO33
IO35
IO25
IO26
IO27
VCC
GND
U15
6 PIN Header
J4
AC INPUT
U8
HLK-10M05
GND
+5V VCC
+5Vcc
270K 1W 1%
R11
R10
270K 1W 1%
D5
MB6S_C341540
GND
+5Vcc
+5V VCC
C1
22uf
U2
LD1117AS12TR
ADJ/GND
VOUT
VIN
VOUT
C2
22uf
C3
22uf
C4
0.1uf
10K
C7
0.1uf
C8
0.1uf
U1
ESP-32S
GND
3V3
EN
SENSOR_VP
SENSOR_VN
IO34
IO35
IO32
IO33
IO25
IO26
IO27
IO14
IO12
GND
IO13
SHD/SD2
SWP/SD3
SCS/CMD
GND
IO23
IO22
TXD0
RXD0
IO21
NC
IO19
IO18
IO5
IO17
IO16
IO4
IO0
IO2
IO15
SDI/SD1
SDO/SD0
SCK/CLK
TX0
RX0
POT 36
IO35
IO32
IO33
IO25
IO26
IO27
IO14
IO4
IO2
OK1
4N25SM
R5
10K 0603
+5Vcc
GND
switcher
U13
BOOT
0.1uf
C6
GND
U10
MOC3021M
R14
1k 1210
P12
AC terminals
R15
39ohm 1/2w
D4
BT137-600E
C5
103J 400V
GND
U12
RESET
VCC
U14
PASS RESET GPIO34
GND
PS-22F03 switch
LED4
NET INDICATOR
R12
470
IO14
GND
TITLE:
SJ retrofit
REV: 1.0
Company: voltera
Sheet: 1/1
Date: 2020-07-04
Drawn By: vamsi krishna
EasyEDA