BiT

Bahir Dar Institute Of Technology- Bahir Dar University

ባሕር ዳር ቴክኖሎጂ ኢንስቲትዩት - ባሕር ዳር ዩኒቨርሲቲ

Bahir Dar Institute of Technology

Bahir Dar University

Faculty of Chemical and Food Engineering

Introduction to Chemical Engineering

Year 2018 E.C.

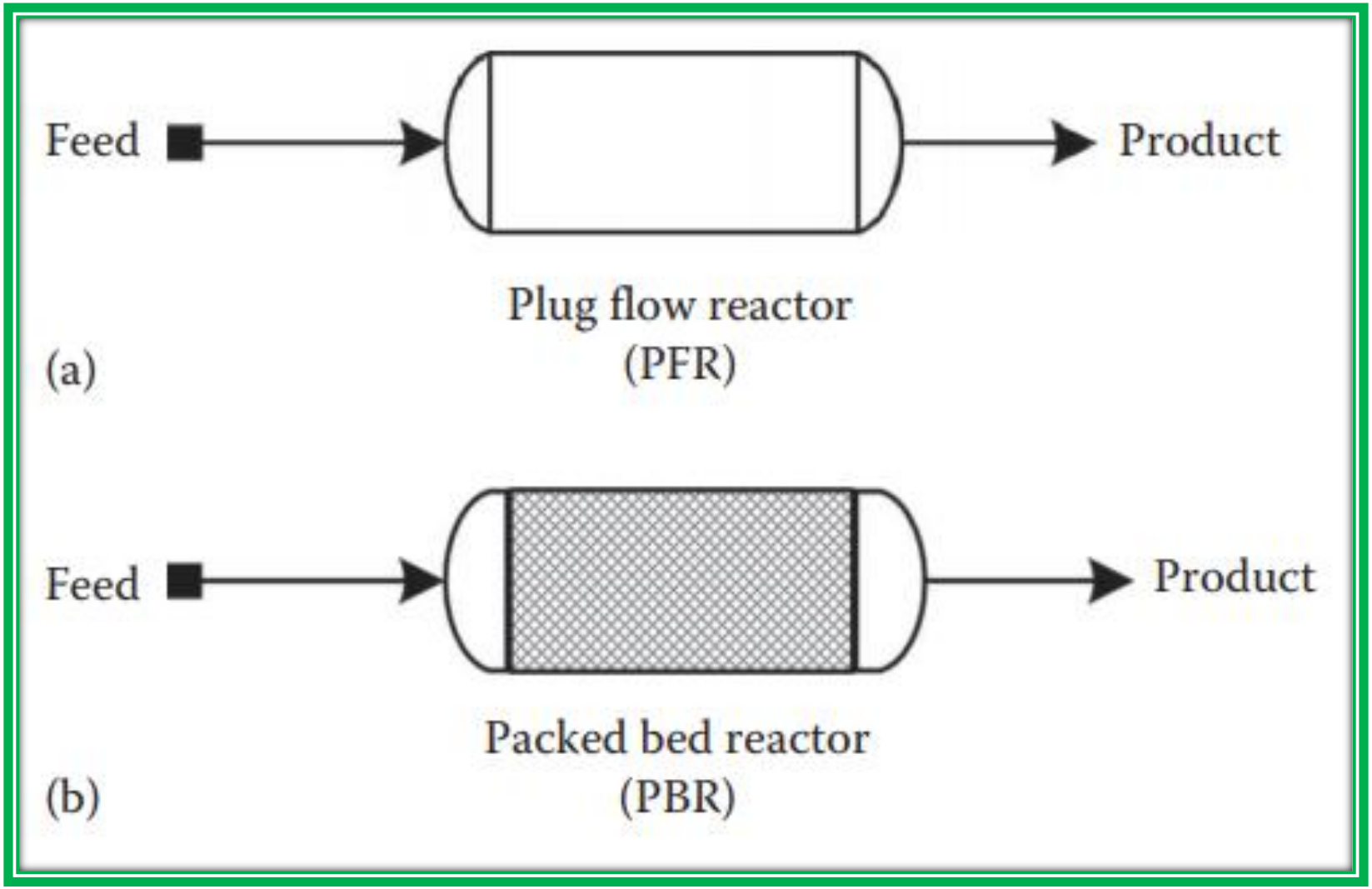
Feed
Product
Plug flow reactor
(PFR)
(a)
Feed
Product
Packed bed reactor
(PBR)
(b)

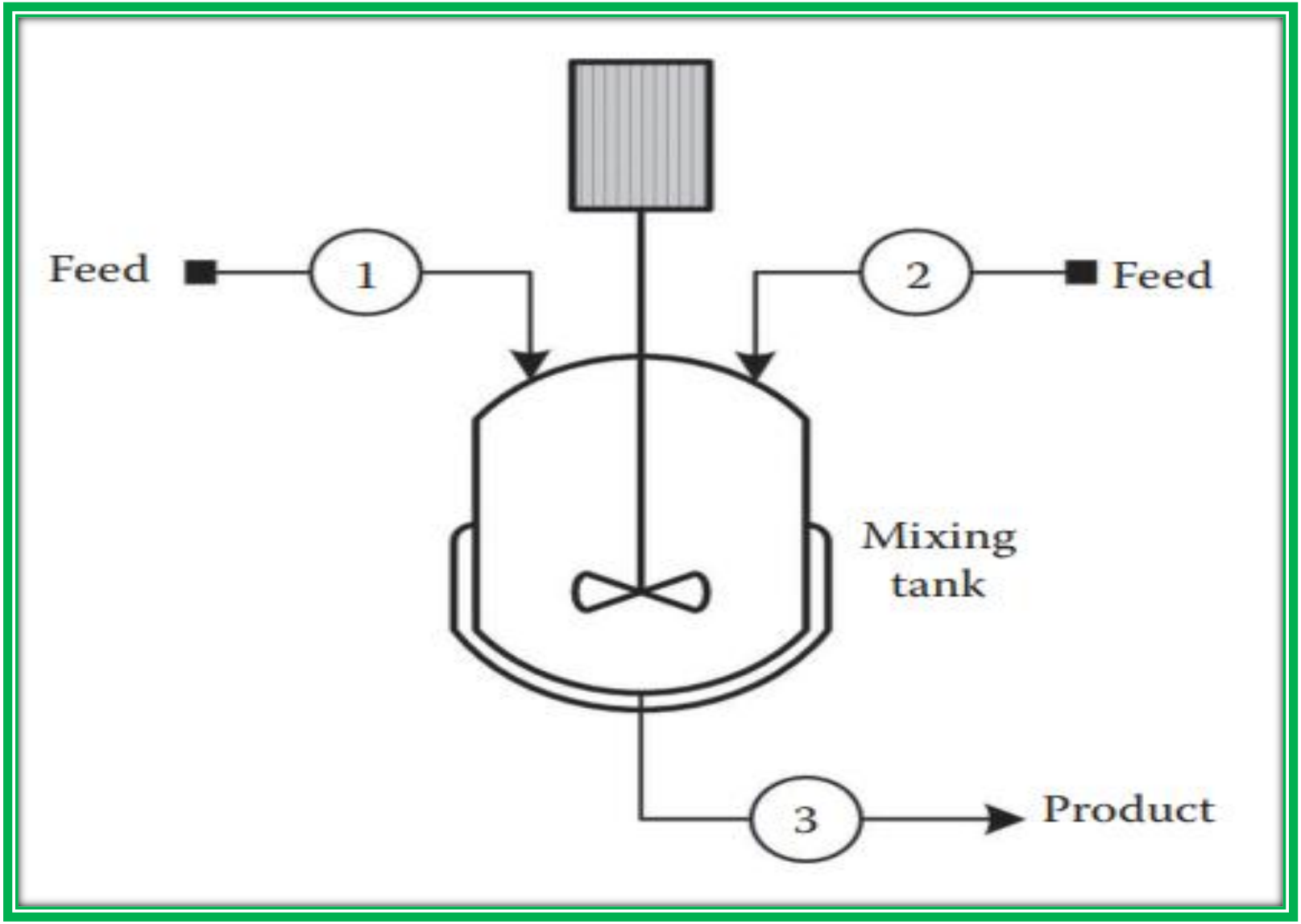
Feed
1
2
Feed
Mixing tank
3
Product

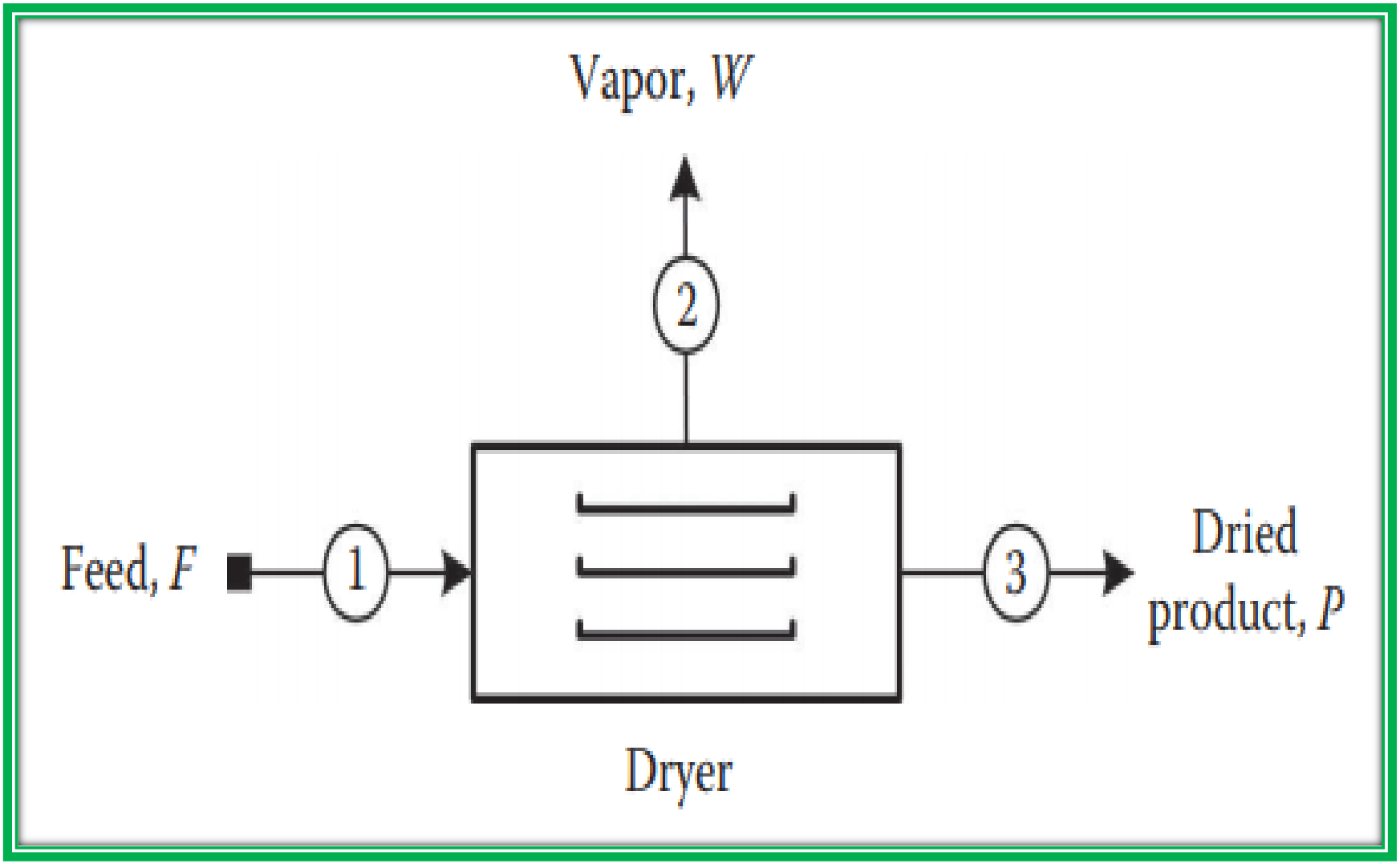
Vapor, W
2
Feed, F
1
3
Dried product, P
Dryer

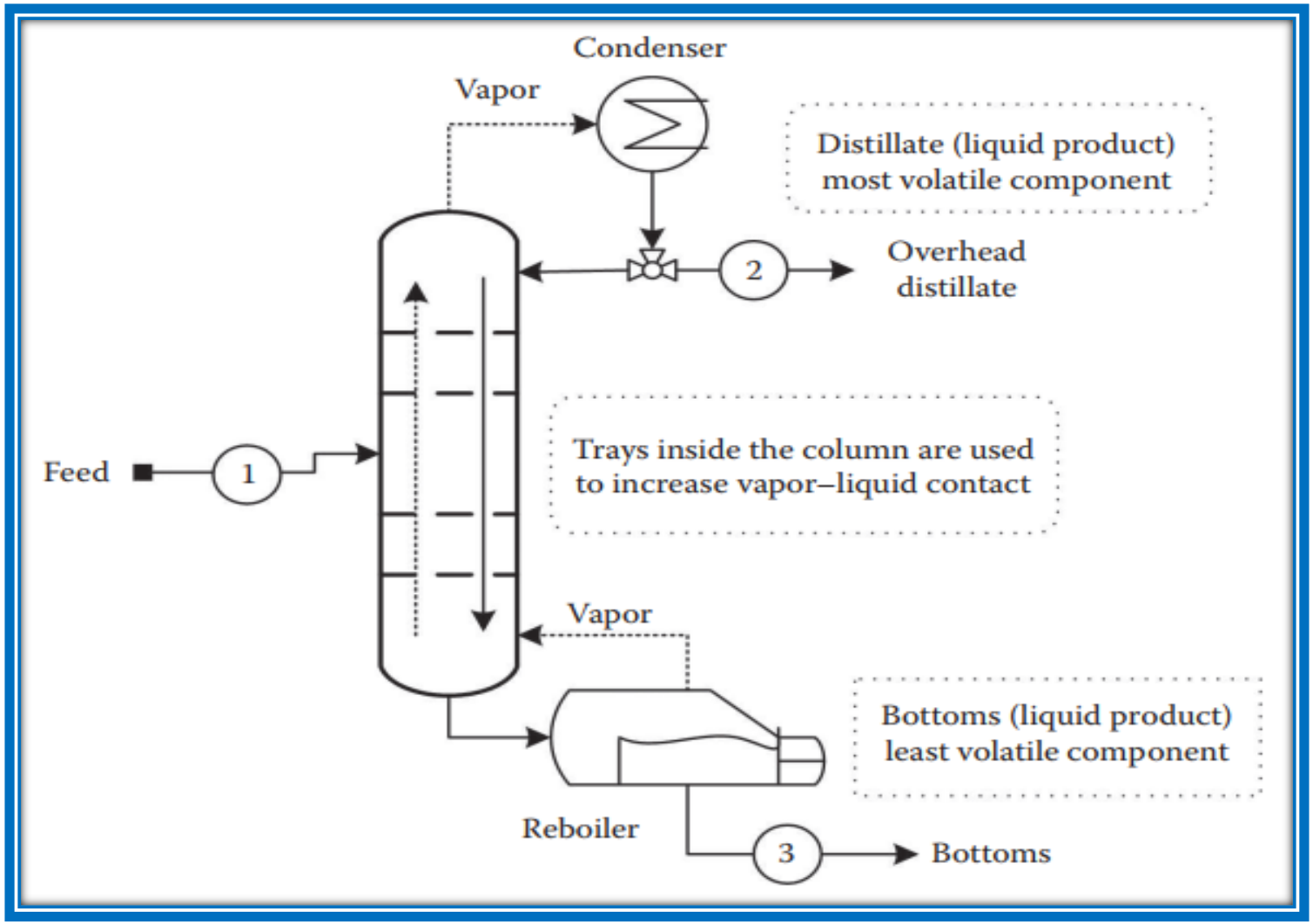
Condenser
Vapor
Distillate (liquid product)
most volatile component
2
Overhead
distillate
Feed
1
Trays inside the column are used
to increase vapor–liquid contact
Vapor
Bottoms (liquid product)
least volatile component
Reboiler
3
Bottoms

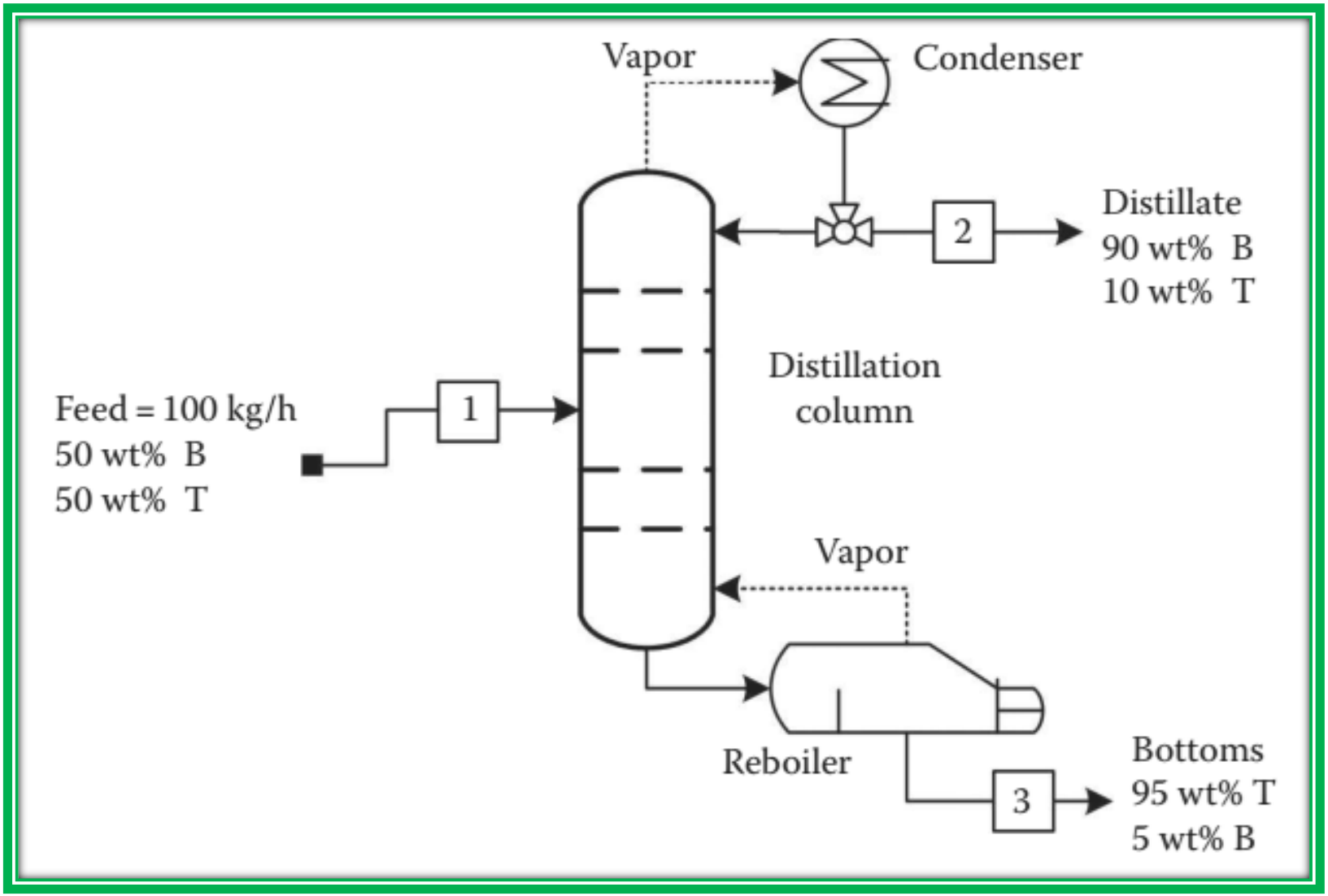
Vapor
Condenser
Distillate
90 wt% B
10 wt% T
2
Distillation
column
Feed = 100 kg/h
50 wt% B
50 wt% T
1
Vapor
Reboiler
Bottoms
95 wt% T
5 wt% B
3

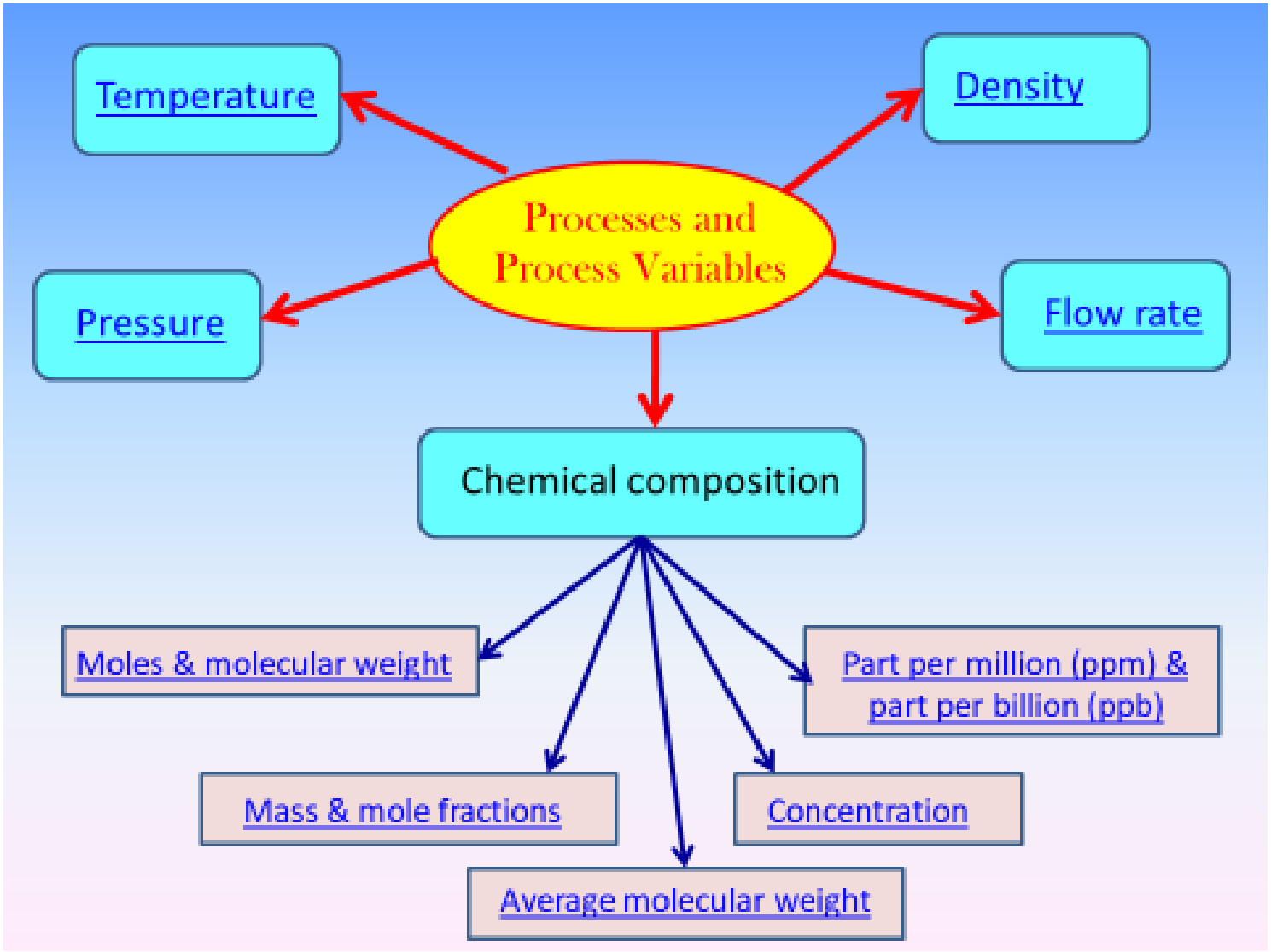
Processes and Process Variables
Temperature
Density
Pressure
Flow rate
Chemical composition
Moles & molecular weight
Part per million (ppm) & part per billion (ppb)
Mass & mole fractions
Concentration
Average molecular weight

Process

- **Process** is any operation or series of operations by which a particular objective is accomplished
- Chemical engineering is responsible to **design** and **operate** a process
- **Design** includes **formulation of a process flowchart (layout)**, **specification of individual process units** and **associated process variables** that specify the conditions at which the units are to be operated

  Examples:- Reactors, Separators, Heat exchangers, Pumps and Compressors

- **Operation** involves a day-to-day performance of an existing process
- A process is expected to produce a product at a specified rate with specified characteristics, and the tasks of Engineers are controlling individual units to meet the objectives.

Example:- To perform process **analysis** with objectives & to identify ways to reduce costs associated with raw materials and energy consumption, A combination of the following approaches is used

- ✓ Controlled tests on the actual process or a scaled-down version of it
- ✓ Developing a mathematical model to predict process outcomes at different operating conditions

Process

- Examination of an operating process should be ongoing, but there is a special need when the process is functioning poorly and troubleshooting is required to identify the cause of the problem.
- An increase in market demand requires an increase in production rate, and the required increase exceeds the capacity of the existing equipment.
- Identifying and modifying a step in the process that is limiting the production rate in order to obtain greater throughput is referred to as debottlenecking.
- When demand for the product falls, adjusting the process through turndown becomes important.

Process and Process Variables

- A **process** is any operation or series of operations that causes physical or chemical changes in a substance or a mixture of substances.
- A **process flow diagram/sheet** (PFD) is a sequence of process units connected by process streams. It shows the flow of materials and energy through the process units
- A **process unit** is an apparatus/equipment in which one of the operations that constitutes a process is carried out. Each process unit has associated with it a set of input and output process streams, which consists of materials that enter and leave the unit.

Process and Process Variables

- A **process stream** is a line that represents the movement of material to or from process units
- **Streams** labeled with information like amount, composition, temperature, and pressure of the components

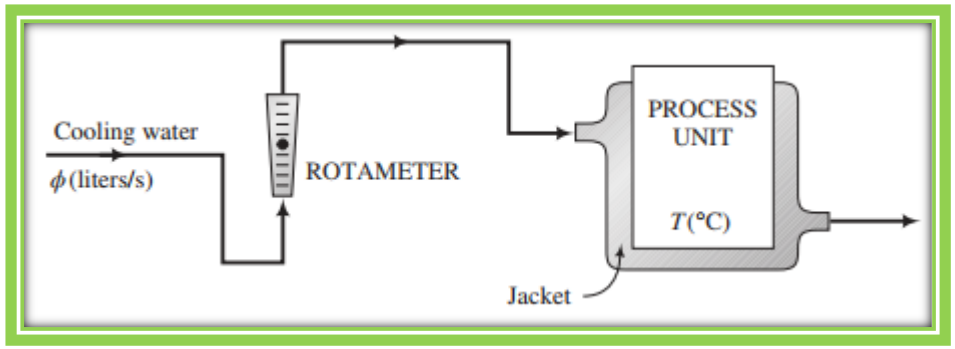

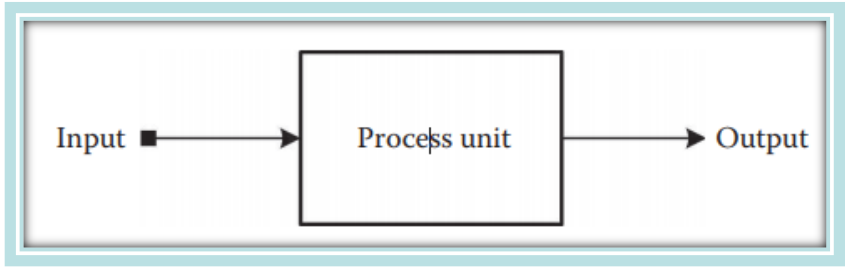

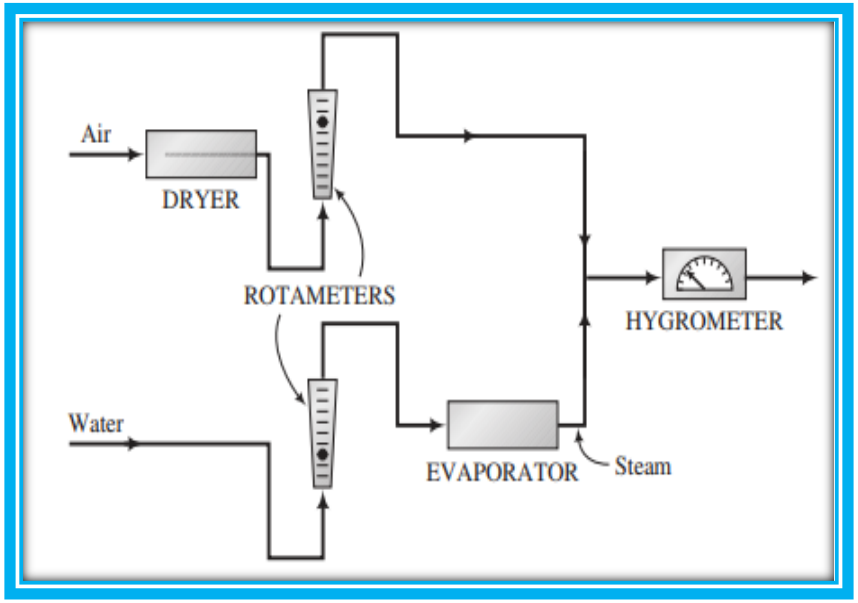

Process and Process Variables

- **Density, Mass, and Volume**

➢ Density (ρ) is defined as mass (m) per unit volume (V) of a substance. The proper units reflect mass/length3 (e.g., kg/m3, g/cm3, and lbm/ft3)

$$\rho = \frac{m}{V} = \frac{\text{mass}}{\text{volume}}$$

➢ Density can be used as a conversion factor to relate the mass and volume of a substance.

➢ Densities of **pure solids and liquids** are essentially **independent** of pressure and **vary** slightly with temperature

Process and Process Variables

- For most compounds, density decreases with temperature (volume expansion).
- Solids and liquids are incompressible, which means that density is constant with change in pressure.
- Gases (vapors) are compressible, which means that density changes as pressure changes.
- Specific volume ($1/\rho$) is defined as volume occupied by a unit mass of a substance
- The proper units reflect length3/mass (reciprocal of density)

Process and Process Variables

- Specific gravity (SG) is the ratio of the density (ρ) of a substance to the density (ρref) of a reference substance at a specific condition

$$SG = \frac{\rho}{\rho_{ref}} = \frac{\text{density of substance}}{\text{density of a reference substance}}$$

$$SG = \frac{\rho_{sub} @ 20°C}{\rho_{ref} @ 4°C}$$

- The reference commonly used for solids and liquids is water at 4 0C and air for gas (**15 ° C 1.225 g/L**)

$$\rho_{ref} = \rho_{H_2O}\Big|_{@\,4°C} = 1.0\ g/cm^3 = 1000\ kg/m^3 = 62.43\ lb_m/ft^3.$$

Process and Process Variables

- **Mass and Volumetric Flow Rates**

➢ A flow rate is the rate (on a time basis) at which a material is transported through a process line

$$\text{Mass flow rate } (\dot{m}) = \text{mass/time}$$

$$\text{Volume flow rate } (\dot{V}) = \text{volume/time}$$

➢ The density of a fluid can be used to convert a known volumetric flow rate of a process stream to the mass flow rate of that particular stream or vice versa

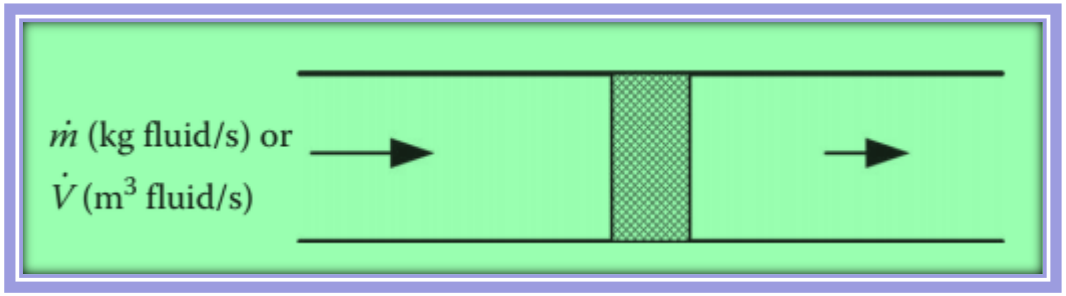

$$\text{Density} = \rho = \frac{m}{V} = \frac{\dot{m}}{\dot{V}}$$

Material Transports Through A Pipe

Flow Rate Measurement

- A **flowmeter** is a device mounted in a process line that provides a continuous reading of the flow rate in the line.
- Two commonly used flowmeters— **rotameter** and **orifice meter**

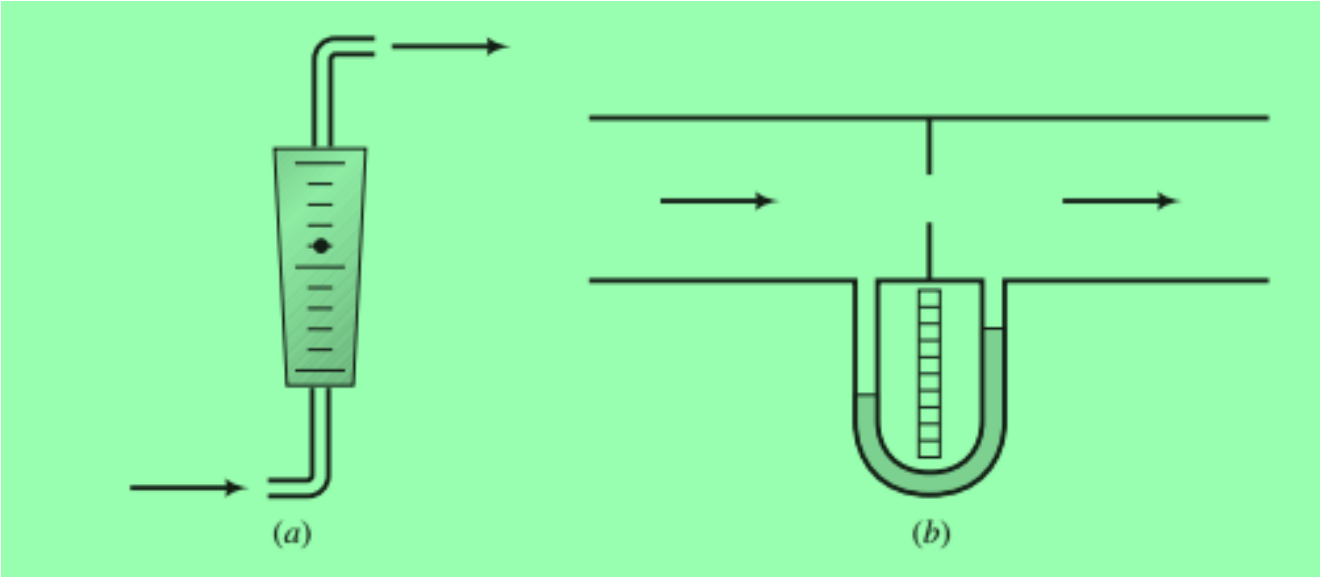

Flowmeters: (*a*) Rotameter and (*b*) Orifice meter.

Flow Rate Measurement

- The **rotameter** is a tapered vertical tube containing a **float**; the larger the flow rate, the higher the float rises in the tube.
- The **orifice meter** measures the pressure drop across an orifice (a small opening) in a thin plate restricting the flow in a conduit.
- Fluid flows through the orifice, and the pressure decreases from the upstream side of the orifice to the downstream side.
- The pressure difference, which varies with flow rate, may be measured with a number of devices, including a differential manometer
- The greater the flow rate, the larger the pressure drop

Process and Process Variables

Example:- Volumetric Flow Rate

Nitrogen from a tank flows at a rate of 6 lbm/min at −350° F, then enters a heater where it is heated, and leaves the heater as a gas at 150° F and 600 psia. Calculate the volumetric flow rate and the specific volume of the gas leaving the heater. Molecular weight of N2 is 28 g/mol or 28 lbm/lbmol. Assume the ideal gas law.

Process and Process Variables

- **Moles and Molecular Weight**

- Atomic weight is the mass of an atom of an element.
- Mole is the amount of the species whose mass in grams is numerically equal to its molecular weight.
- One mole of any species contains approximately 6.023 × 10^23 (Avogadro's number) molecules of that species

N.B **Molecular weight is the conversion factor that relates mass and number of moles of a quantity of a substance**

Process and Process Variables

- The average molecular weight based on mole fraction is

$$\bar{M}w = y_A M_{w,A} + y_B M_{w,B}$$

or

$$\bar{M} = y_1 M_1 + y_2 M_2 + \ldots\ldots = \sum_{\text{all component}} y_i M_i$$

- The average molecular weight based on mass fraction is

$$\frac{1}{\bar{M}w} = \frac{x_A}{M_{w,A}} + \frac{x_B}{M_{w,B}}$$

or

$$\frac{1}{\bar{M}} = \frac{x_1}{M_1} + \frac{x_2}{M_2} + \ldots\ldots = \sum_{\text{all component}} \frac{x_i}{M_i}$$

where

$\bar{M}w$ is the average molecular weight

x_i is the mass fraction of component i in a mixture

y_i is the mole fraction of component i in the mixture

Example

A liquid stream flowing at 100 g/min contains 0.3 mole fraction benzene (Mw = 78) and the balance 0.7 mole fraction toluene (Mw=92). Calculate the molar flow rate of each component in the stream.

Compositions of Streams

Mass Fraction and Mole Fraction

- Process streams occasionally contain one substance; more often they consist of mixtures of liquids or gases, or solutions of one or more solutes in a liquid solvent.
- To define composition of a mixture of substances, species A

$$\text{Mass fraction}: x_A = \frac{\text{mass of A}}{\text{total mass}}$$

$$\text{Mole fraction}: y_A = \frac{\text{moles of A}}{\text{total number of moles}}$$

Compositions of Streams

Example Mole Fractions

- A mixture of methanol (CH3OH, Mw =32.04) and ethanol (C2H5OH, Mw =46.07) is flowing through a circular pipe at a flow rate of 3.0 m/s. The mixture contains 30.0 wt% methanol and 70.0 wt% ethanol. The specific gravity of the mixture is 0.80. If the inside diameter of the pipe is 0.10 m, what is the flow rate of the mixture in kg/s, kmol/s?

Example Mass Fractions

- A liquid stream containing only benzene, toluene, and p-xylene flows through a conduit that has a square cross section. The total flow rate of the stream is 10.0 mol/s. If the mole fraction of benzene (Mw=78) is 0.300, that of toluene (Mw=92) is 0.500, and that of p-xylene (Mw= 106) is 0.200, what is the mass fraction of each of the three components? If the density of the liquid is 0.87 g/cm3 and the conduit is 0.10 m on a side, what is the mass fraction and volumetric flow rate of the liquid inside the conduit?

Compositions of Streams

- **Concentration**

✓ Concentrations can be expressed in many ways: weight/weight fraction (w/w), weight/volume fraction (w/v), molar concentration (M), and mole fraction

- The weight/weight concentration is the weight of the solute divided by the total weight of the solution, and this is the fractional form of the percentage composition by weight
- The weight/volume concentration is the weight of solute divided by the total volume of the solution
- The molar concentration is the number of moles of the solute, expressed in moles, divided by the volume of the solution.
- The mole fraction is the ratio of the number of moles of the solute to the total number of moles of all species present in the solution

Compositions of Streams

Concentration

- **Mass Concentration (C_A)** $$C_A = \frac{\text{mass of A}}{\text{Volume of Mixture}}$$
- **Molar Concentration (C_A)** $$C_A = \frac{\text{moles of A}}{\text{Volume of Mixture}}$$
- **Molarity** $$C_A = \frac{\text{moles of A}}{\text{Volume of Mixture in Liter}}$$

Parts Per Million (ppm) & Parts Per Billion (ppb)

- To express the concentrations of trace species in gases or liquids
- May refer to mass ratios (usual for liquids) or mole ratios (usual for gases)

✓ **Parts Per Million (ppm)** $\text{ppm} = y_i * 10^6$

✓ **Parts Per Billion (ppb)** $\text{ppb} = y_i * 10^9$

Example:- The air around an industry was found containing 15 ppm SO_2. What is the mole fraction of SO_2 in the air?

15 ppm $SO_2 = y_{SO_2} * 10^6$

$$y_{SO_2} = 15 * 10^{-6} \text{ ppm } SO_2$$

Compositions of Streams

Example Air Compositions

- If 100 g of air consists of 77% by weight of nitrogen (N2, molecular weight=28), and 23% by weight of oxygen (O2, molecular weight=32), calculate (a) the mean molecular weight of air, (b) mole fraction of oxygen, (c) concentration of oxygen in mol/m3 and kg/m3, if the total pressure is 1.5 atm and the temperature is 25° C.

Example Concentration of Salt in Water

- Salty water is prepared by mixing salt (NaCl, Mw= 58.5) in water (Mw = 18). A solution is prepared by adding 20 kg of salt to 100 kg of water, to make a liquid of density 1323 kg/m3. Calculate the concentration of salt in this solution as a (a) weight/weight fraction, (b) weight/volume in kg/L, and (c) mole fraction.

Atmospheric, Absolute & Gauge Pressure

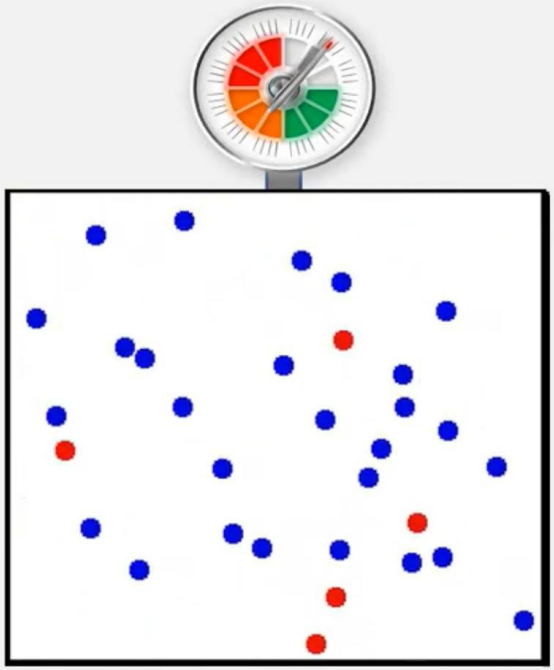

- ✓ The **Pressure** in a fluid at any point represents the impact force on the surface due to **molecular collisions** per unit area.
- ✓ The SI Unit of pressure is **N/m²** or **Pascal.**

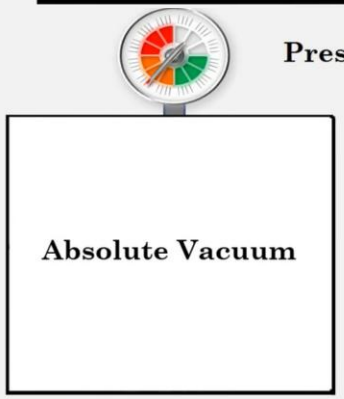

Pressure Measurement

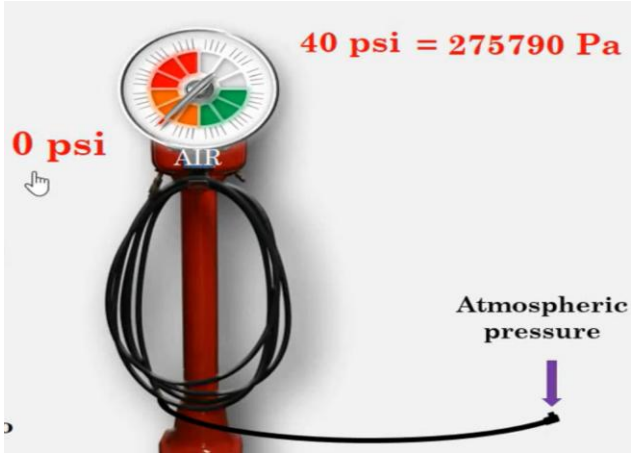

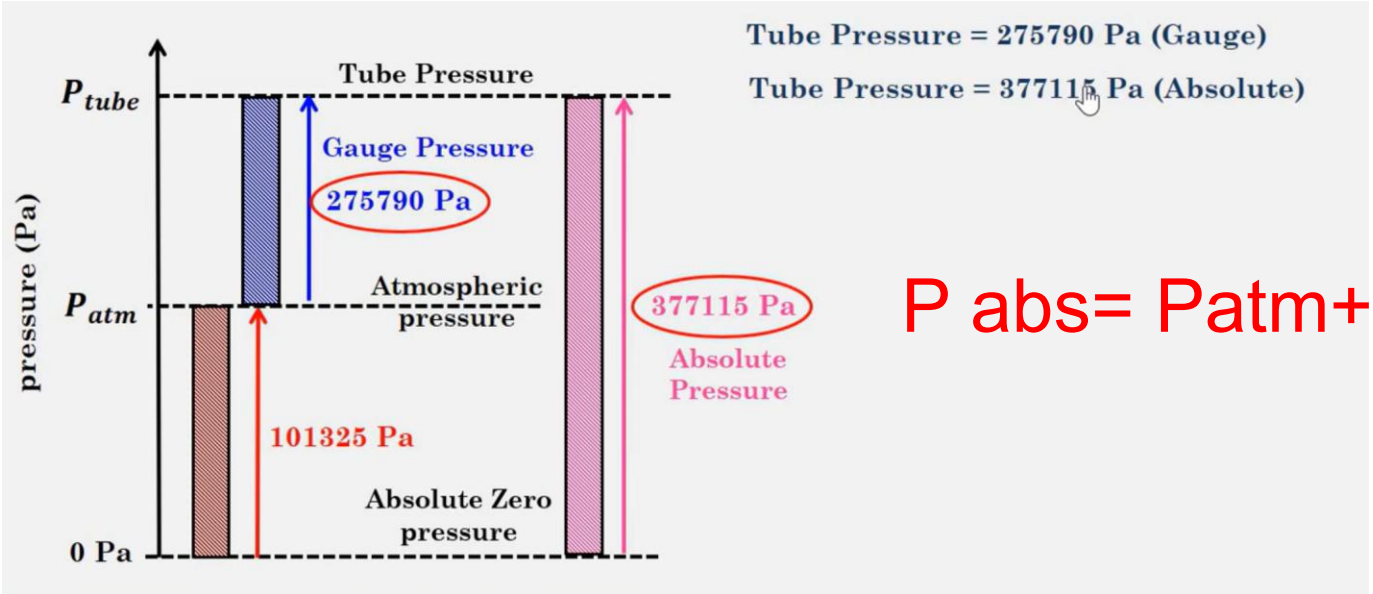

P abs= Patm+Pgauge

Pressure Measurement

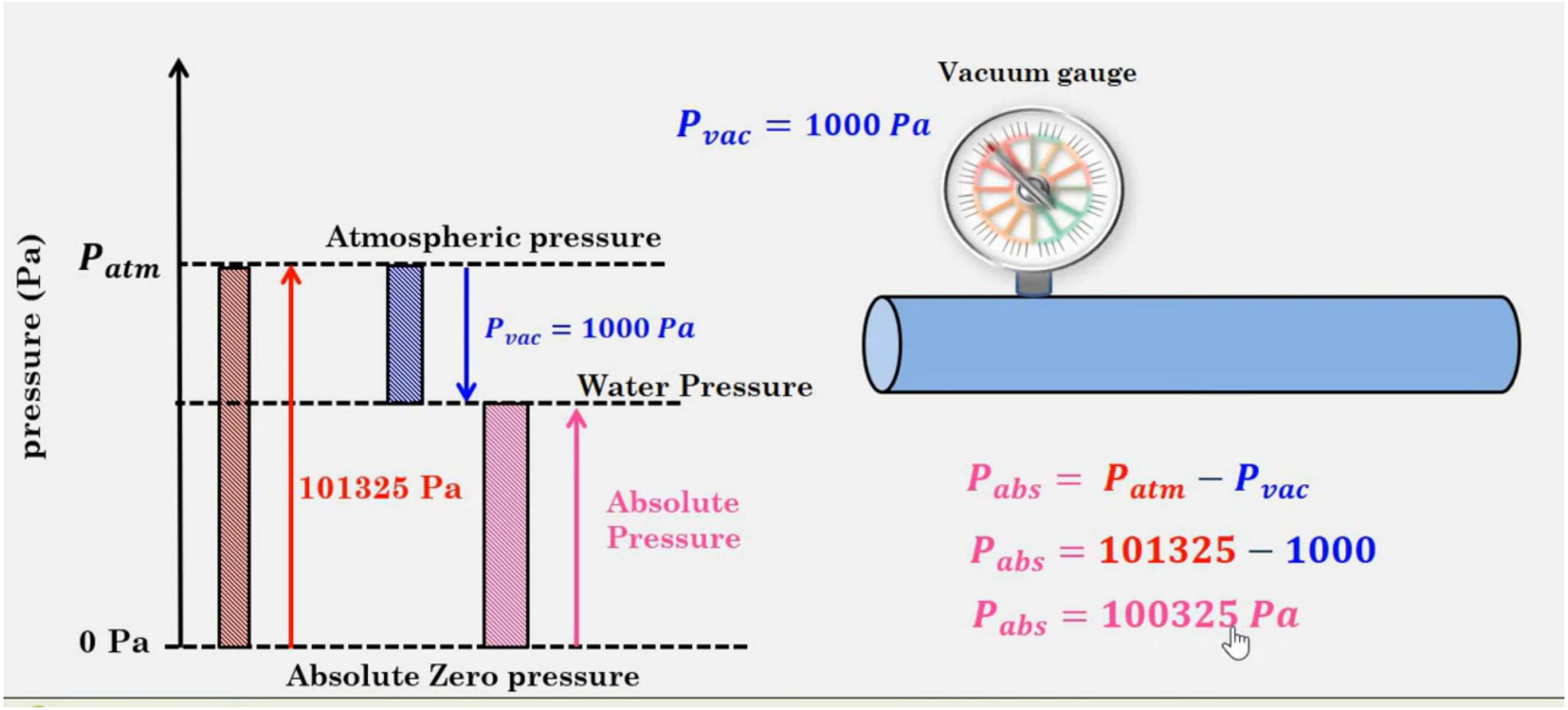

Temperature

- ✓ Temperature of a substance in a particular state of aggregation (solid, liquid, or gas) is a measure of the average kinetic energy possessed by the substance molecules.
- ✓ Some temperature measuring devices based on substance properties include electrical resistance of a conductor (resistance thermometer), voltage at the junction of two similar metals (thermocouple), spectra of emitted radiation (pyrometer), and volume of a fixed mass of fluid (thermometer).
- ✓ The following relationship may be used to convert a temperature expressed in one defined scale unit to its equivalent in another;

$$T(K) = T(^\circ C) + 273.15$$
$$T(^\circ R) = T(^\circ F) + 459.67$$
$$T(^\circ R) = 1.8T(K)$$
$$T(^\circ F) = 1.8T(^\circ C) + 32$$

Standard Temperature, Pressure & Volume

$$\text{Standard temperature} = T_s = 0°\text{C} \Rightarrow 273\ \text{K}$$

$$\text{Standard pressure} = P_s = 1\ \text{atm} = 760\ \text{mmHg} = 101.3\ \text{kPa}$$

$$\text{Standard molar volume} = \hat{V}_s = 22.4\,\frac{\text{m}^3(\text{STP})}{\text{kmol}} \Leftrightarrow 22.4\,\frac{\text{L(STP)}}{\text{mol}} \Leftrightarrow 359\,\frac{\text{ft}^3(\text{STP})}{\text{lb mol}}$$

One molecule of an ideal gas at 0°C and 1 atm occupies 22.4 L.

Thank you