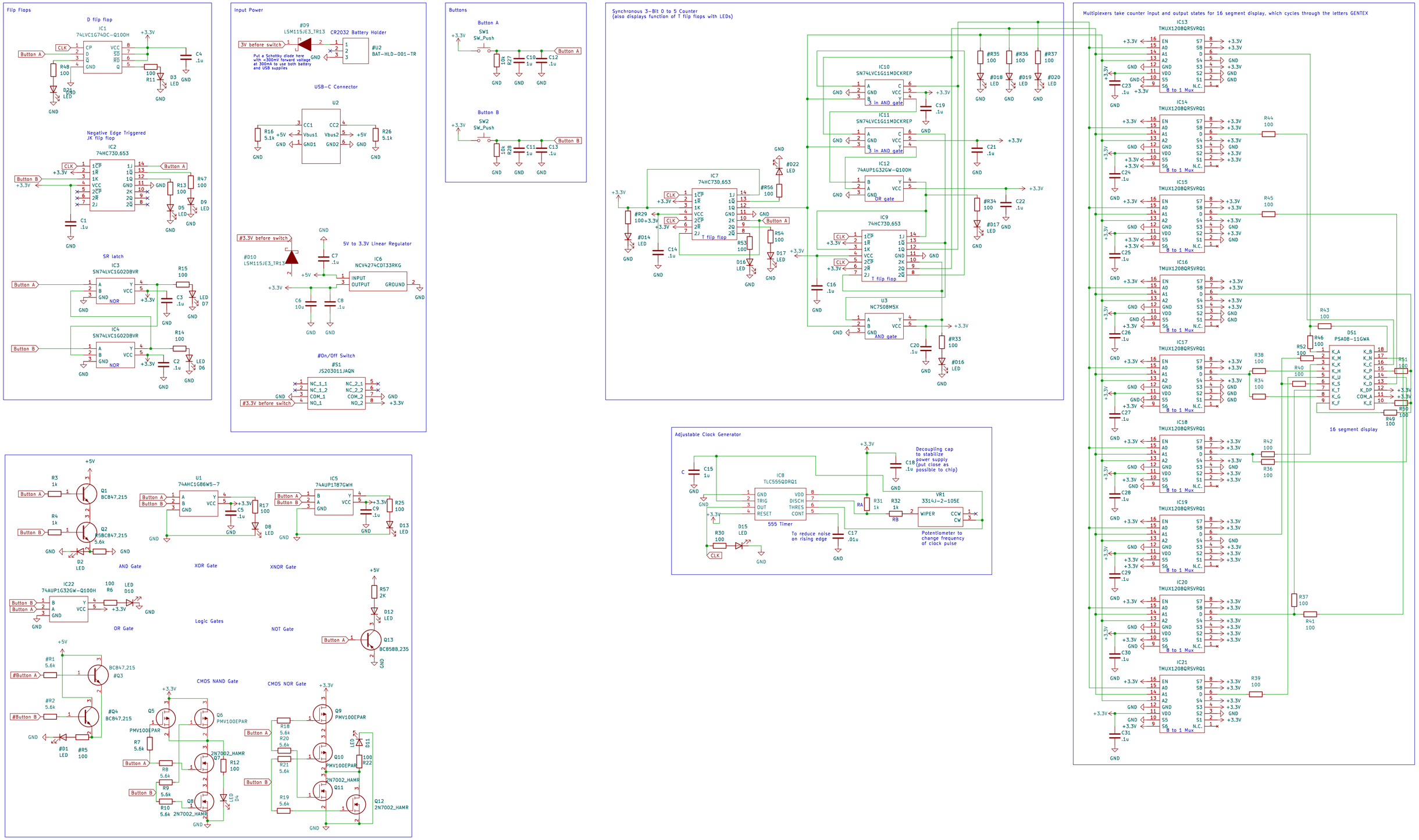

Designed by: Jacob Vanden Bosch & Luke Jensen
Gentex Corporation
Sheet: /
File: Logic-PCB.kicad_sch

Title: Quick Turn Promotional PCB

Size: A2	Date: 2023-08-10	**Rev: 2.0**
KiCad E.D.A. kicad 7.0.5		Id: 1/1