Quarter-Car Suspension Simulation
Linear and Nonlinear Damping Analysis

Piyush More

March 9, 2026

1 Introduction

This project investigates the dynamics of a two–mass quarter-car suspension system using both linear and nonlinear damping models. The objective is to determine an optimal damping configuration that minimizes vibration transmission from road disturbances to the vehicle body.

The quarter-car model consists of:

- Sprung mass (m_s) representing the vehicle body
- Unsprung mass (m_u) representing the wheel assembly
- Suspension spring (K_s)
- Tire stiffness (K_t)
- Suspension damper (C_s)

The system is simulated using MATLAB and Simulink.

2 Equations of Motion

The quarter car model is described by two second order differential equations.

2.1 Sprung Mass Equation

$$\ddot{z}_s = -\frac{K_s}{m_s} z_s - \frac{C_s}{m_s} \dot{z}_s + \frac{K_s}{m_s} z_u + \frac{C_s}{m_s} \dot{z}_u$$

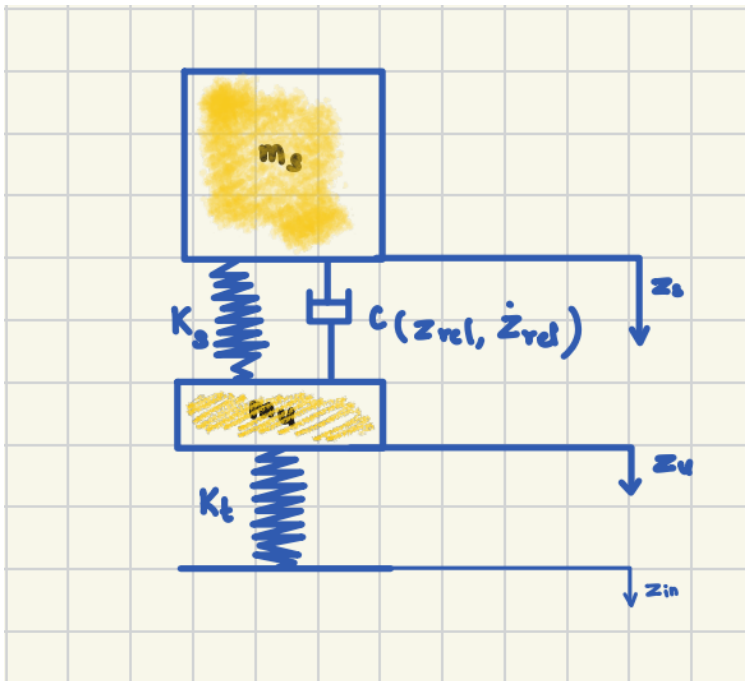

Figure 1: Two-mass quarter car suspension model consisting of sprung and unsprung masses.

2.2 Unsprung Mass Equation

$$\ddot{z}_u = \frac{K_s}{m_u} z_s + \frac{C_s}{m_u} \dot{z}_s - \frac{K_t + K_s}{m_u} z_u - \frac{C_t + C_s}{m_u} \dot{z}_u + \frac{K_t}{m_u} z_{in} + \frac{C_t}{m_u} \dot{z}_{in}$$

where

- z_s = sprung mass displacement
- z_u = unsprung mass displacement
- z_{in} = road input

3 State Variables

The system state variables are defined as

$$x_1 = z_s$$

$$x_2 = \dot{z}_s$$

$$x_3 = z_u$$

$$x_4 = \dot{z}_u$$

The road displacement z_{in} is used as the system input.
which represents the vertical acceleration of the vehicle body per road disturbance.
Ride comfort is primarily influenced by vibrations in the frequency range:

$$1 - 10 \text{ Hz}$$

A Bode magnitude plot was generated to evaluate the effect of different damping coefficients.

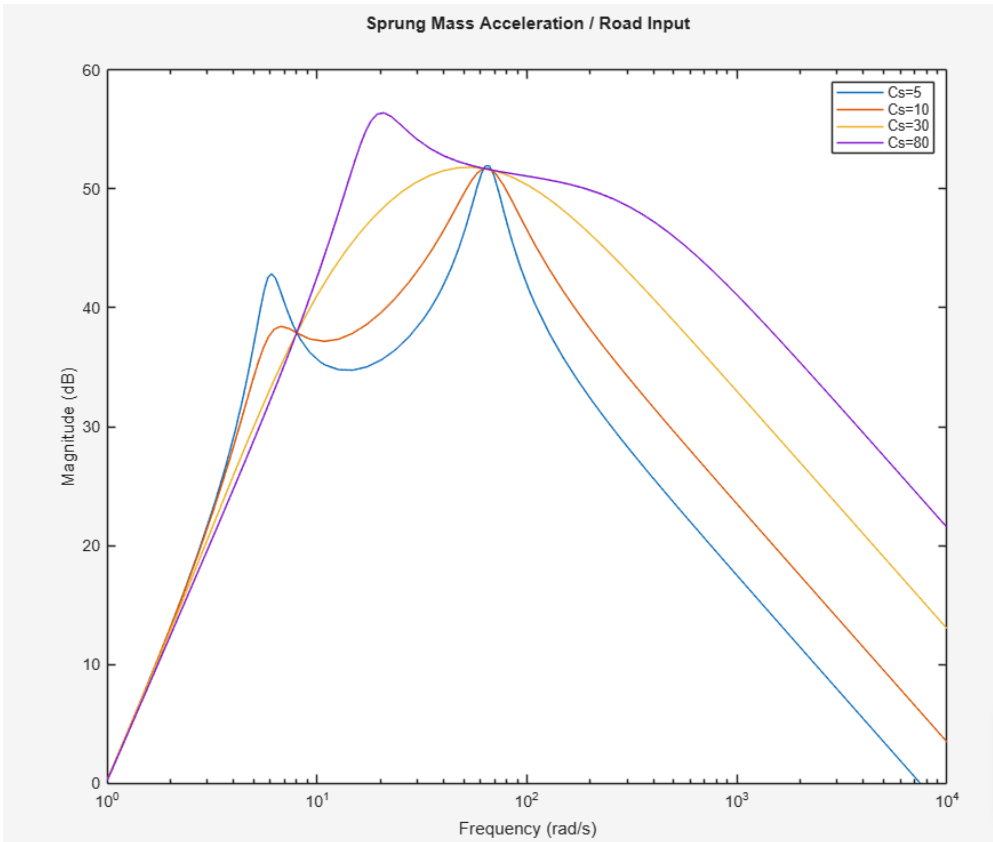

Figure 2: Bode magnitude plot showing the frequency response of the quarter-car suspension for different damping coefficients. Moderate damping ($C_s \approx 30$ lb-sec/in) reduces the resonance peak while avoiding excessive high-frequency amplification.

As shown in Fig. 2, low damping produces a sharp resonance peak, while high damping increases high-frequency vibration transmission. A moderate damping value of $C_s \approx 30$ lb-sec/in provides the best trade-off between resonance suppression and high-frequency isolation.

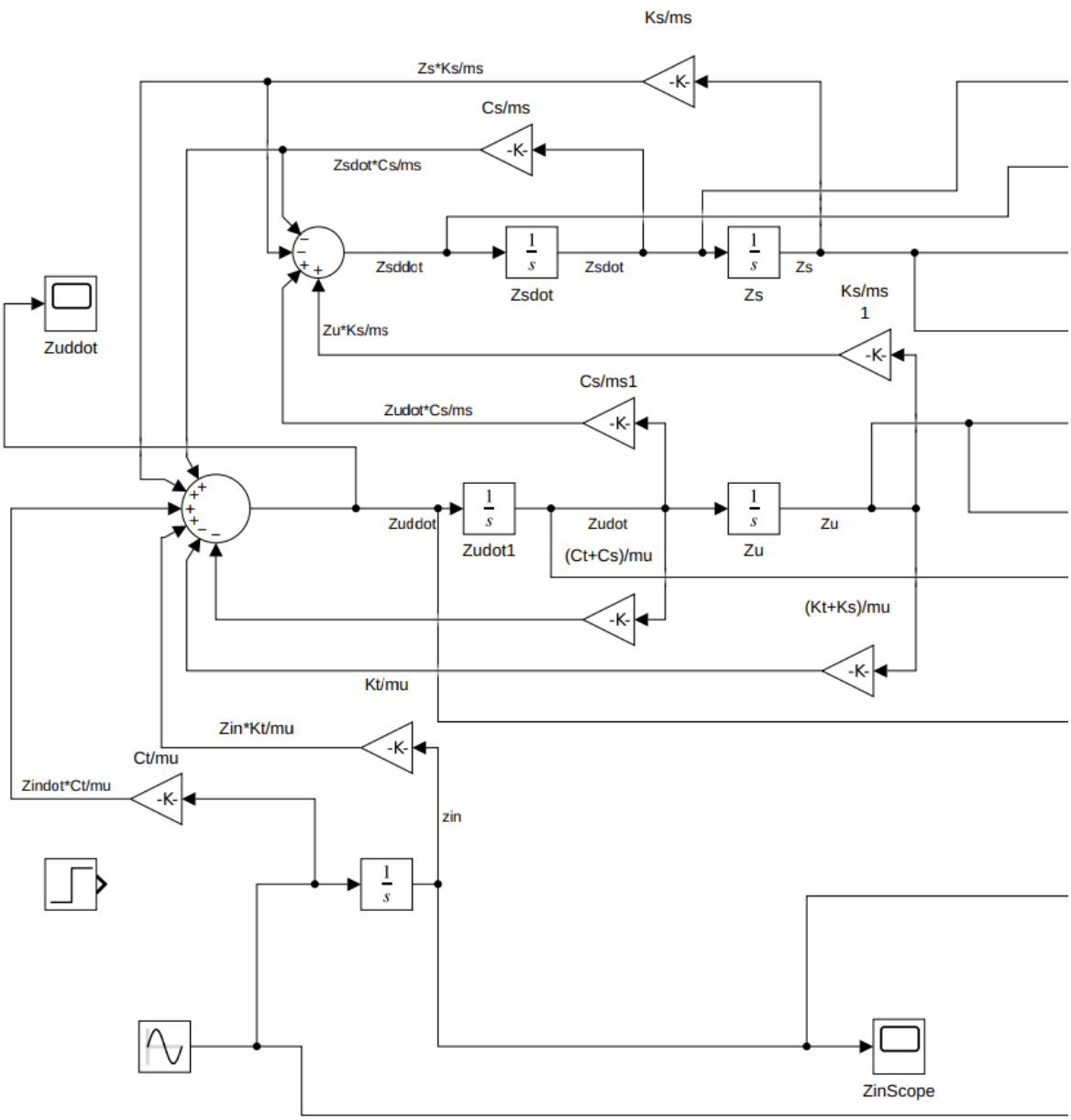

Figure 3: Simulink implementation of the quarter-car suspension model. Two cascaded integrators represent the position and velocity states of both the sprung and unsprung masses.

3.1 Observations

- Low damping ($C_s = 5$) produced a sharp resonance peak.
- High damping ($C_s = 80$) increased transmission of high-frequency vibrations.
- Moderate damping ($C_s \approx 30$) reduced the resonance peak while avoiding excessive high-frequency amplification.

Therefore,

$$C_s = 30 \text{ lb-sec/in}$$

was selected as the optimal linear damping value.

Using the optimal damping value obtained from the frequency response analysis, a time-domain simulation was performed to evaluate the suspension response to road disturbances.

4 Time Domain Simulation

A time-domain simulation of the quarter-car model was implemented in Simulink using the optimal damping coefficient.

The system was tested using a sinusoidal road input with amplitude of 1 inch. Figure 4 shows the time-domain response of the suspension system.

Figure 4: Time-domain response of the quarter-car suspension system for a sinusoidal road input. The road displacement z_{in}, sprung mass displacement z_s, and unsprung mass displacement z_u are shown. The sprung mass motion remains smaller than the road input, demonstrating vibration isolation of the vehicle body.

The simulation results showed:

- Sprung mass displacement amplitude remained smaller than the road input.
- Oscillations were stable and did not grow over time.

These results confirm the conclusions obtained from frequency response analysis.

5 Nonlinear Damping Model

To improve performance during large disturbances, a nonlinear damping model was proposed.

The damping coefficient is defined as

$$C(z_{rel}, \dot{z}_{rel}) = \begin{cases} C_c + k|z_{rel}| & \dot{z}_{rel} > 0 \\ C_r + k|z_{rel}| & \dot{z}_{rel} \leq 0 \end{cases}$$

where

$$z_{rel} = z_u - z_s$$

The selected parameters were

$$C_c = 20$$

$$C_r = 50$$

$$k = 5$$

6 Hypothesis

If the rebound damping coefficient is greater than the compression damping coefficient,

$$C_r > C_c$$

the suspension system should reduce oscillations following large disturbances such as potholes.

Additionally, increasing damping with suspension deflection provides:

- greater resistance during large suspension travel
- softer response for small vibrations
- improved ride comfort

7 Results

The nonlinear suspension model was evaluated under several road disturbance inputs to assess performance across different operating conditions.

1. 1 inch step input at 0.5 Hz

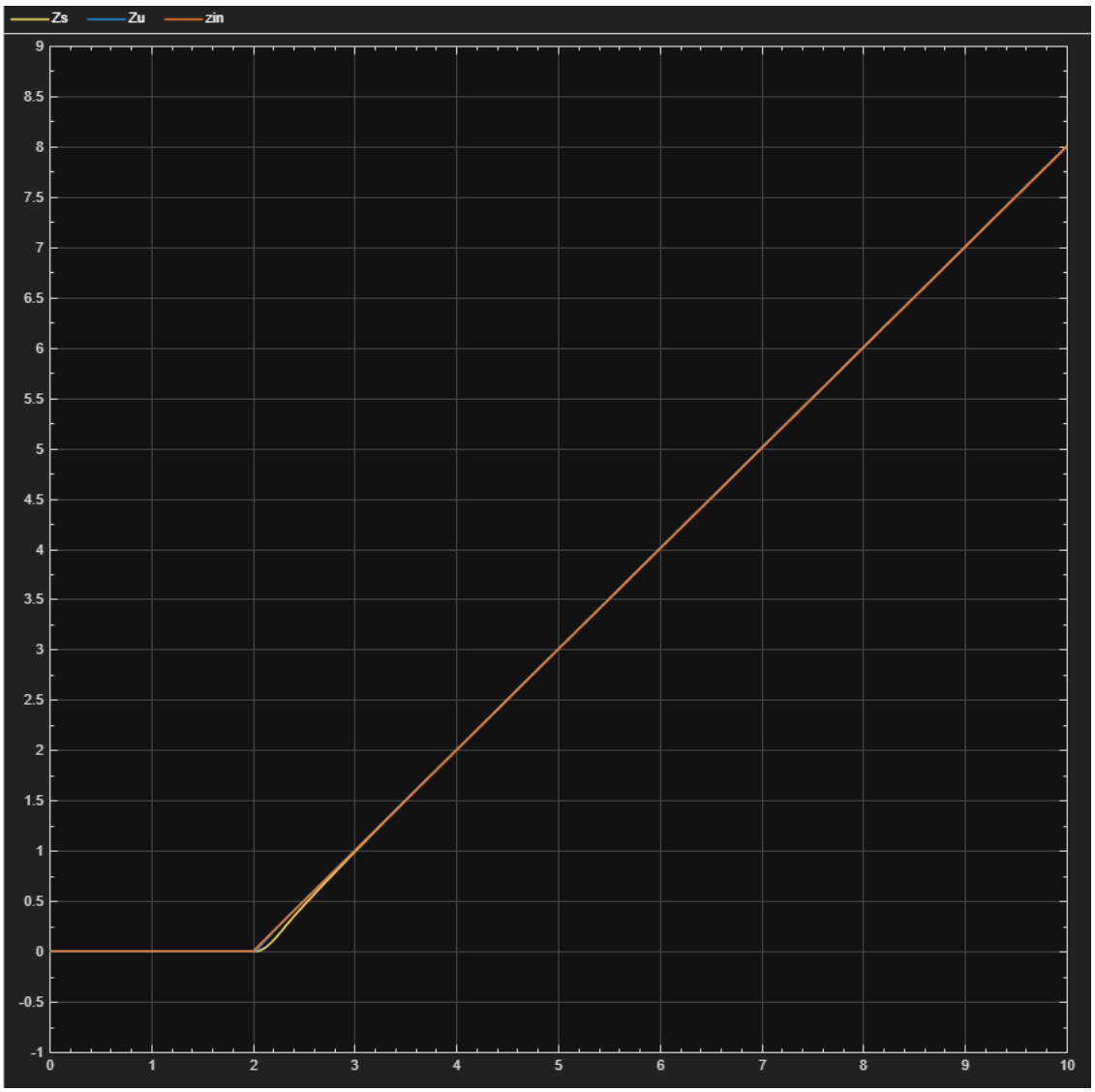

Figure 5: Suspension response for a 1 inch step road input at 0.5 Hz. The sprung mass displacement z_s, unsprung mass displacement z_u, and road input z_{in} are shown.

2. 1/4 inch step input at 0.5 Hz

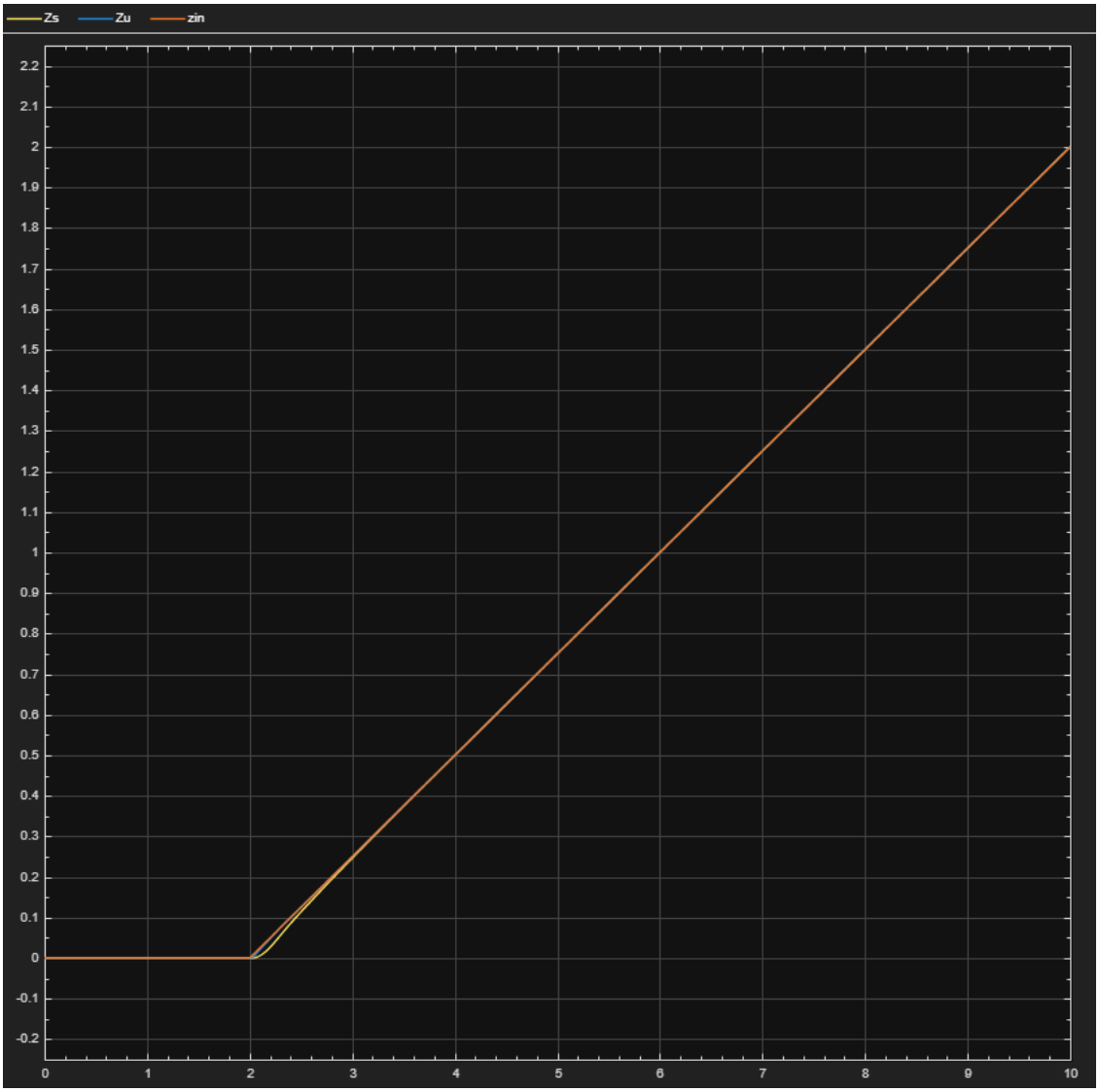

Figure 6: Suspension response for a 1/4 inch step road input at 0.5 Hz. The smaller disturbance produces reduced suspension motion while maintaining stable system behavior.

3. ±1 inch sinusoidal input at 1 Hz

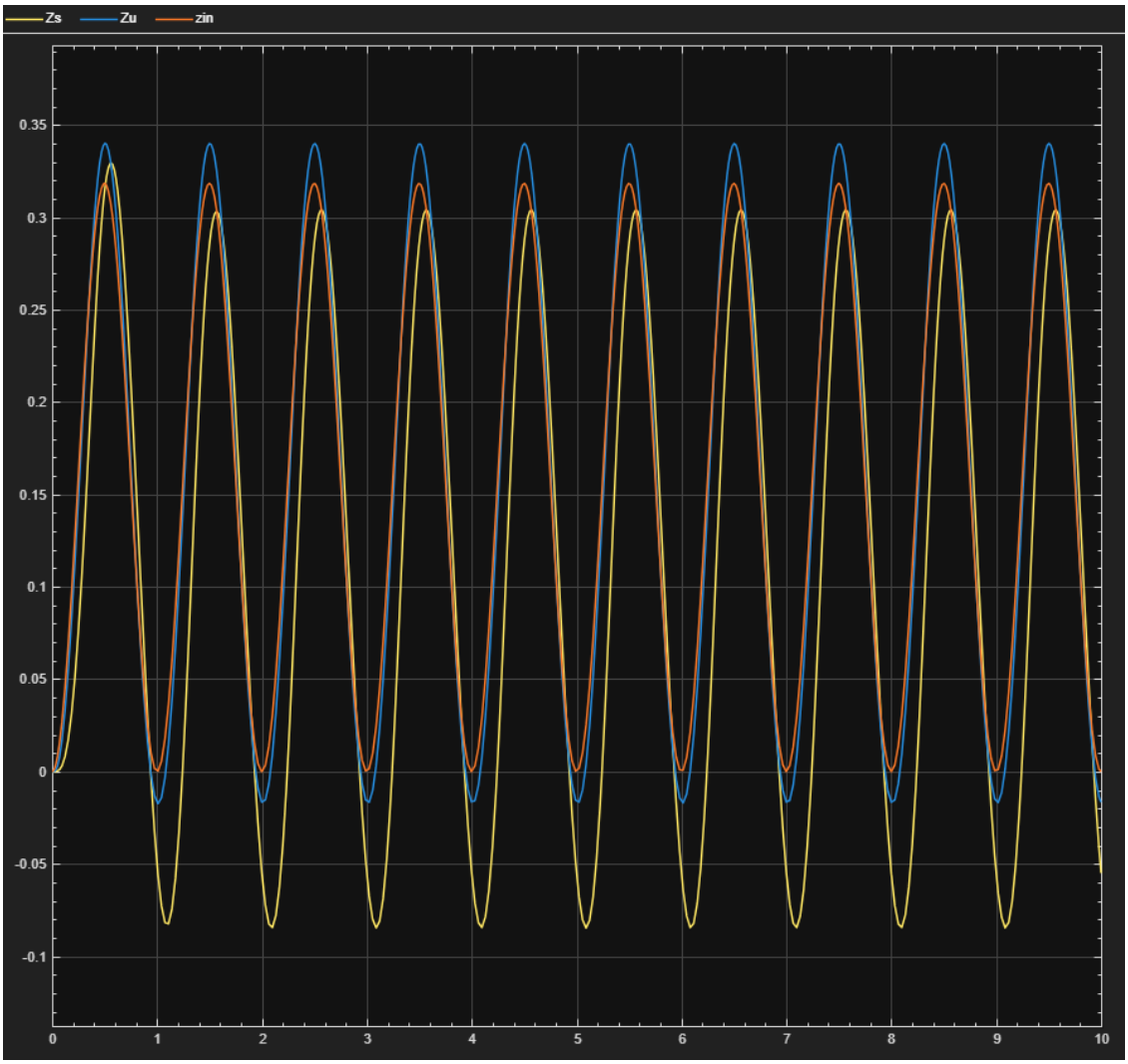

Figure 7: Time-domain response of the quarter-car suspension system for a ±1 inch sinusoidal road input at 1 Hz. The sprung mass displacement remains smaller than the road input, demonstrating vibration isolation.

4. ±1/4 inch sinusoidal input at 10 Hz

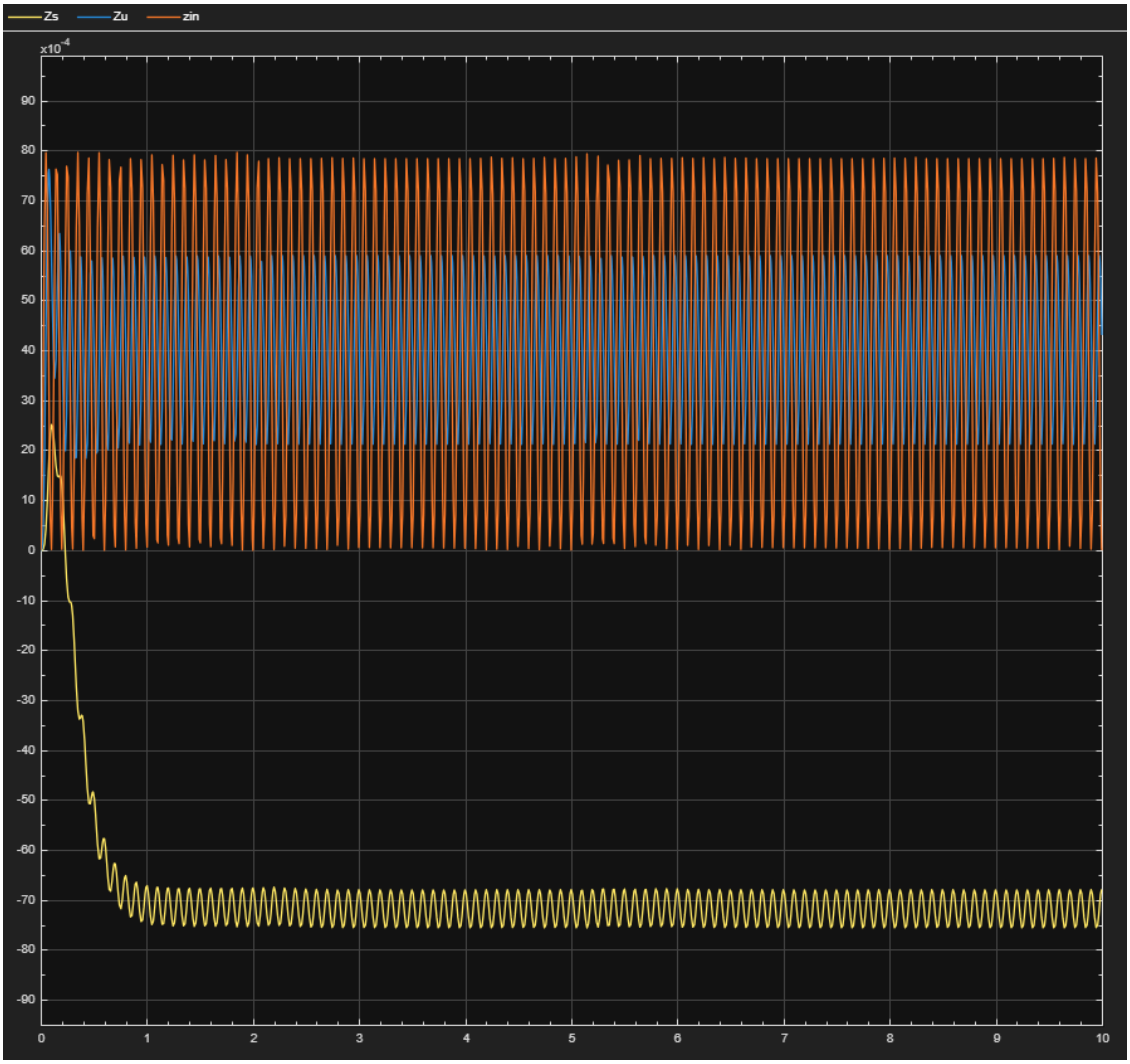

Figure 8: Suspension response for a $\pm 1/4$ inch sinusoidal road input at 10 Hz. High-frequency disturbances are attenuated by the suspension system, resulting in smaller body motion.

5. 2 inch pothole disturbance (3 ft wide) at 60 mph

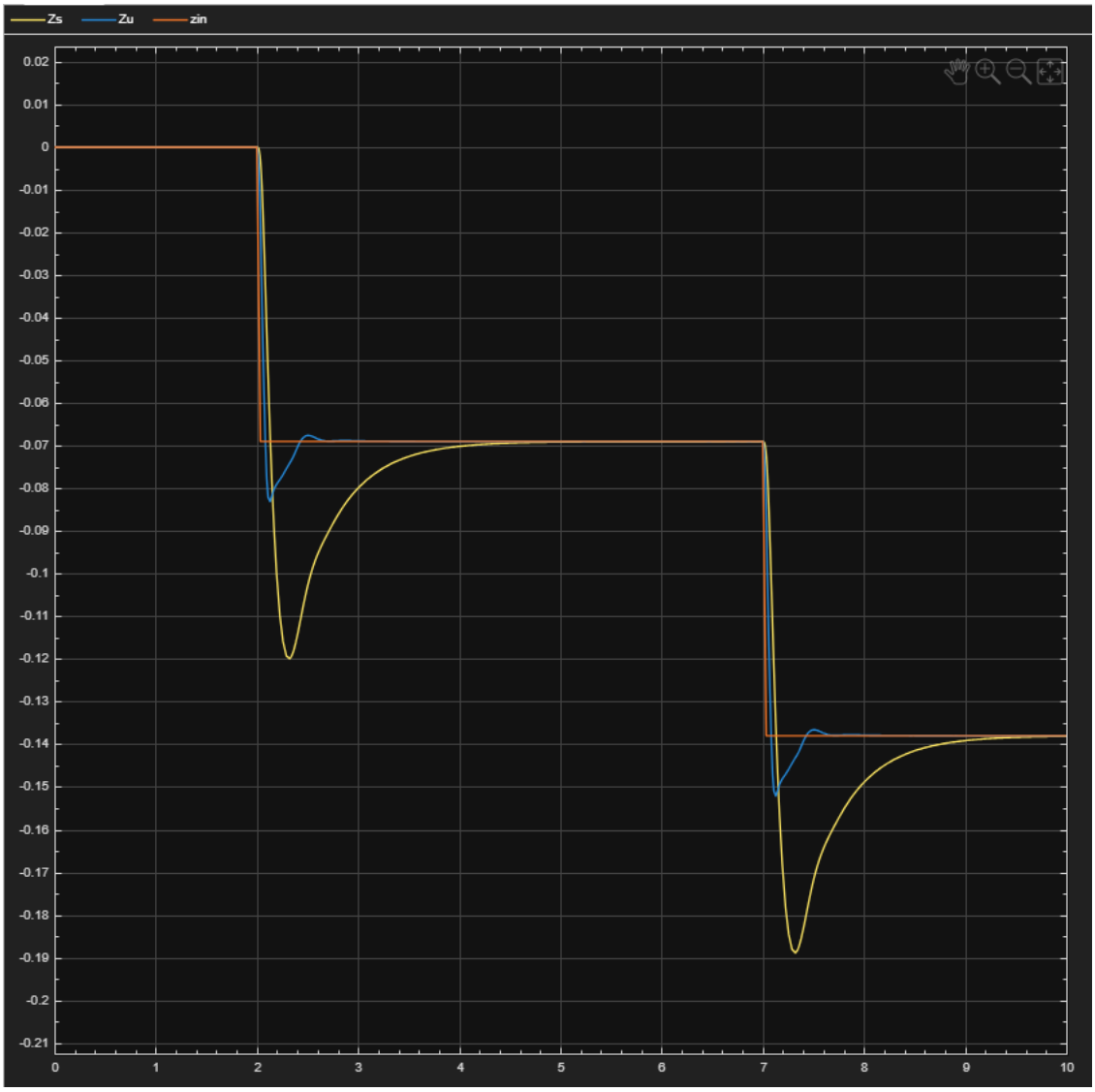

Figure 9: Suspension response to a 2 inch pothole disturbance (3 ft wide) at 60 mph. The nonlinear damping model reduces oscillations following the disturbance.

6. 2 inch pothole disturbance (3 ft wide) at 30 mph

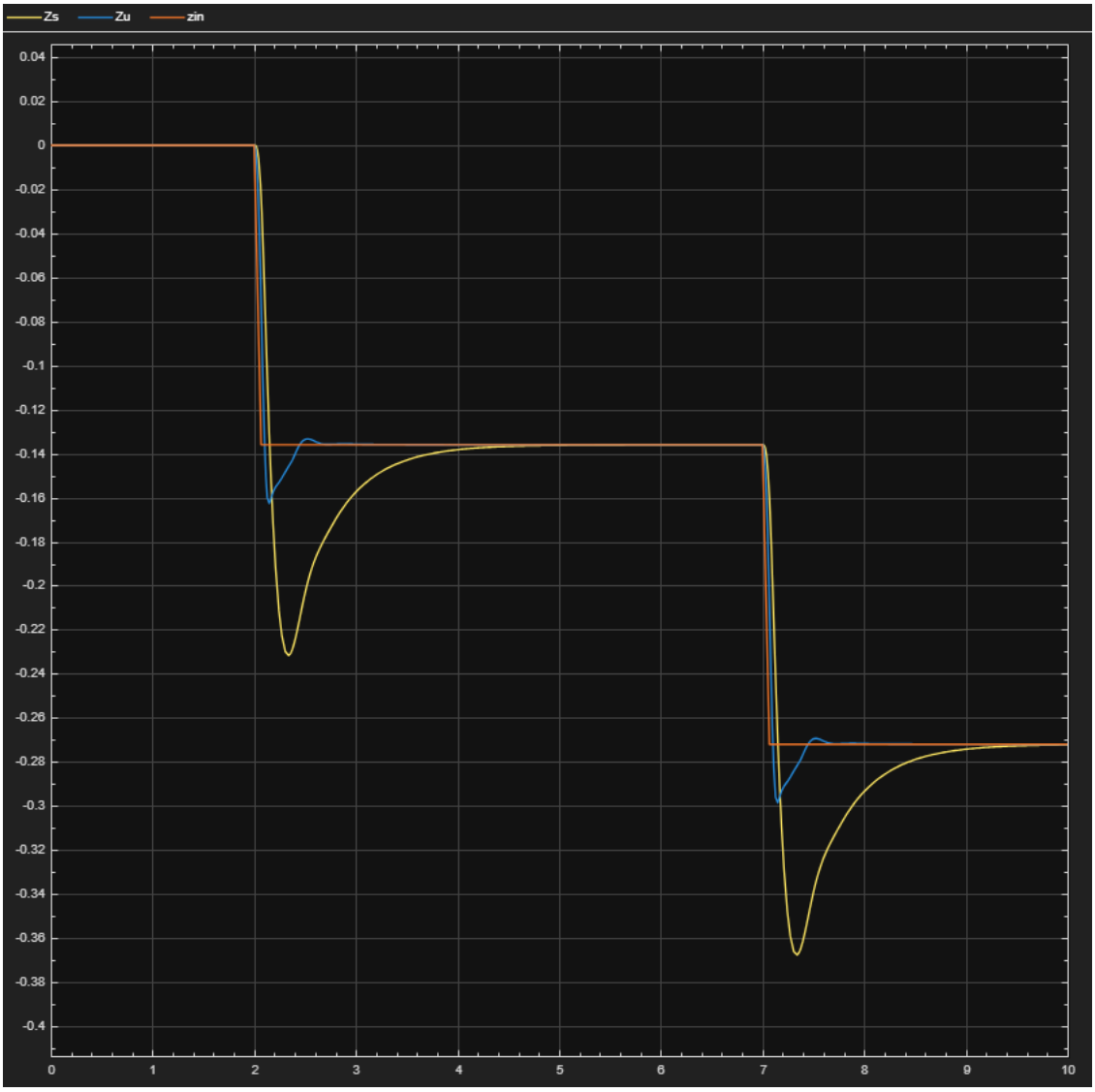

Figure 10: Suspension response to a 2 inch pothole disturbance (3 ft wide) at 30 mph. The system remains stable and the sprung mass motion is reduced compared to the road disturbance.

Key observations include:

- rebound oscillations were reduced after pothole disturbances
- ride comfort remained similar for sinusoidal inputs
- maximum suspension deflection remained below the allowable limit

Compared to the optimal linear damping configuration, the nonlinear damping model improved stability for large disturbances while maintaining acceptable ride comfort.

8 Conclusion

This study investigated both linear and nonlinear damping strategies for a quarter-car suspension model.

Frequency response analysis identified an optimal linear damping value of

$$C_s = 30 \text{ lb-sec/in}$$

A nonlinear damping model incorporating different compression and rebound damping coefficients further improved performance during large disturbances.

Simulation results demonstrated that the nonlinear damper reduced oscillations following large road inputs while maintaining ride comfort for smaller vibrations.