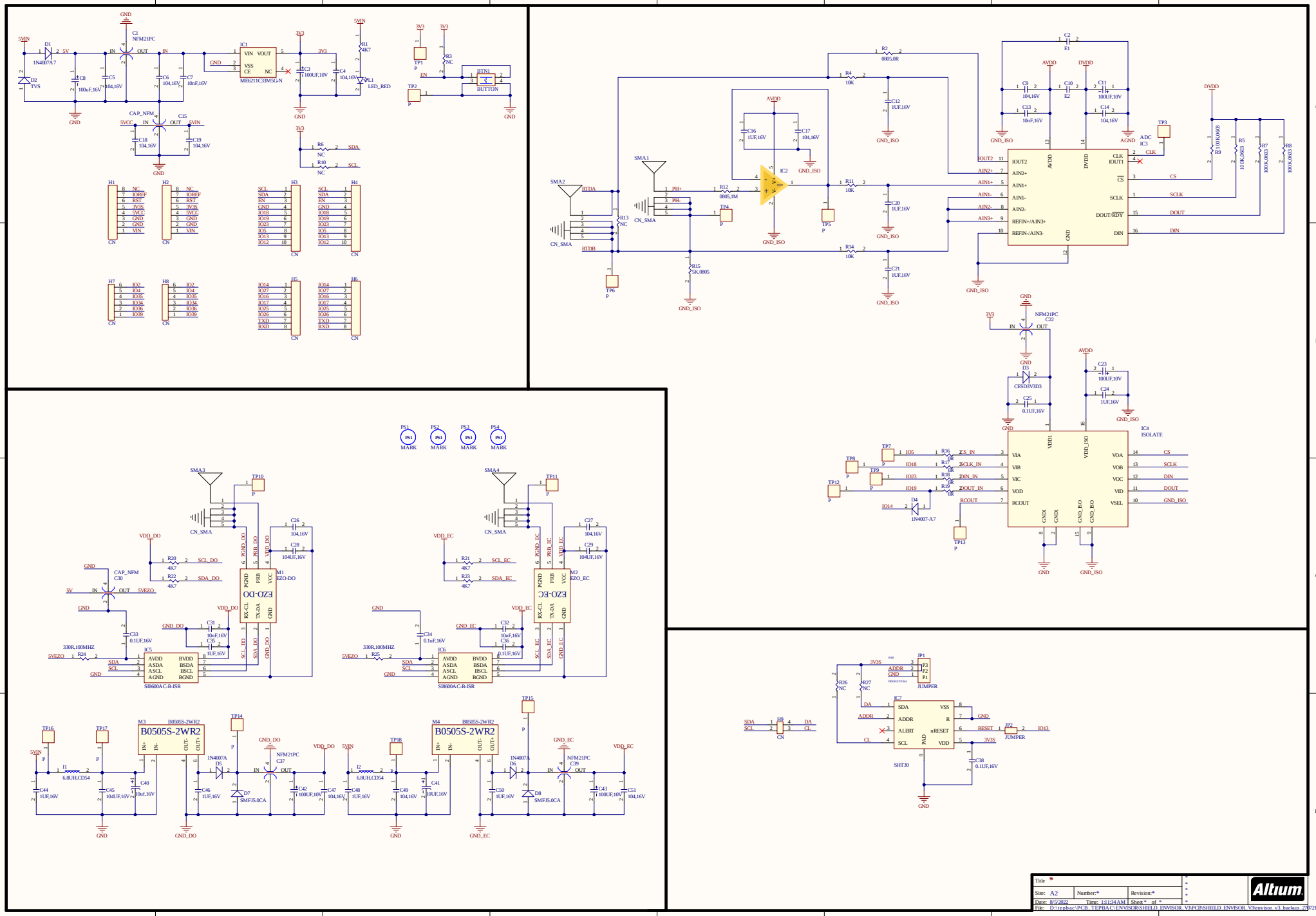
5VIN
D1
1N4007A7
D2
TVS
C1
NFM21PC
C8
100uF,16V
C5
104,16V
C6
104,16V
C7
10nF,16V
GND
IC1
VIN VOUT
VSS
CE NC
ME6211C33M5G-N
C3
100UF,10V
C4
104,16V
3V3
R1
4K7
L1
LED_RED
TP1
P
EN
TP2
R3
NC
BTN1
BUTTON
CAP_NFM
5VCC
C15
C18
104,16V
C19
104,16V
R6
NC
SDA
R10
NC
SCL
H1
H2
H3
H4
H7
H8
H5
H6
CN
IO2
IO4
IO35
IO34
IO36
IO39
IO14
IO27
IO16
IO17
IO25
IO26
TXD
RXD
SMA1
SMA2
SMA3
SMA4
CN_SMA
RTDA
RTDB
R13
NC
R12
0805,1M
R15
5K,0805
R2
0805,0R
R4
10K
R11
10K
R14
10K
C12
1UF,16V
C20
1UF,16V
C21
1UF,16V
C16
1UF,16V
C17
104,16V
IC2
TP3
TP4
TP5
TP6
AVDD
DVDD
AGND
GND_ISO
C2
E1
C9
104,16V
C10
E2
C11
100UF,10V
C13
10nF,16V
C14
104,16V
IC3
ADC
IOUT2
AIN2+
AIN1+
AIN1-
AIN2-
AIN3+
REFIN+/AIN3+
REFIN-/AIN3-
CLK
IOUT1
CS
SCLK
DOUT/RDY
DIN
R8
100K,0603
R5
100K,0603
R7
100K,0603
R9
100K,0603
NFM21PC
C22
D3
CESD3V3D3
C25
0.1UF,16V
C23
100UF,10V
C24
1UF,16V
IC4
ISOLATE
VDD1
VDD_ISO
VIA
VIB
VIC
VOD
RCOUT
VOA
VOB
VOC
VID
VSEL
GND1
GND_ISO
TP7
TP8
TP9
TP12
TP13
IO5
IO18
IO23
IO19
IO14
R16
0R
R17
0R
R18
0R
R19
0R
ZCS_IN
ZSCLK_IN
ZDIN_IN
ZDOUT_IN
D4
1N4007-A7
PS1
PS2
PS3
PS4
MARK
VDD_DO
VDD_EC
R20
4K7
R22
4K7
SCL_DO
SDA_DO
R21
4K7
R23
4K7
SCL_EC
SDA_EC
CAP_NFM
C30
5VEZO
C33
0.1UF,16V
C31
10nF,16V
C35
0.1UF,16V
C34
0.1uF,16V
C32
10nF,16V
C36
0.1UF,16V
330R,100MHZ
R24
R25
IC5
IC6
AVDD
ASDA
ASCL
AGND
BVDD
BSDA
BSCL
BGND
SI8600A-C-B-ISR
M1
EZO-DO
M2
EZO-EC
PGND
PRB
VCC
RX-CL
TX-DA
GND
RGND_DO
VDD_DO
SCL_DO
SDA_DO
GND_DO
RGND_EC
VDD_EC
SCL_EC
SDA_EC
GND_EC
TP10
TP11
C26
104,16V
C28
104,16V
C27
104,16V
C29
104,16V
TP14
TP15
TP16
TP17
TP18
M3
M4
B0505S-2WR2
IN+
IN-
OUT-
OUT+
I1
6.8UH,CD54
I2
6.8UH,CD54
C44
1UF,16V
C45
104UF,16V
C40
10uf,16V
C46
1UF,16V
C47
104,16V
C48
1UF,16V
C49
104,16V
C41
10UF,16V
C50
1UF,16V
C43
100UF,10V
C51
104,16V
1N4007A
D5
D6
D7
SMFJ5.0CA
D8
SMFJ5.0CA
NFM21PC
C37
C39
C42
100UF,10V
3V3S
JP1
JUMPER
ADDR
GND
R26
NC
R27
NC
IC7
SDA
ADDR
ALERT
SCL
VSS
R
nRESET
VDD
PAD
SHT30
DA
CL
RESET
JP2
IO13
C38
0.1UF,16V
JP8
CN
Title *
Size: A2
Number: *
Revision: *
Date: 8/5/2022
Time: 1:11:34 AM
Sheet * of *
File: D:\tepbac\PCB_TEPBAC\ENVISOR\SHIELD_ENVISOR_V3\PCB\SHIELD_ENVISOR_V3\envisor_v3_backup_27\721\ENVISOR
Altium