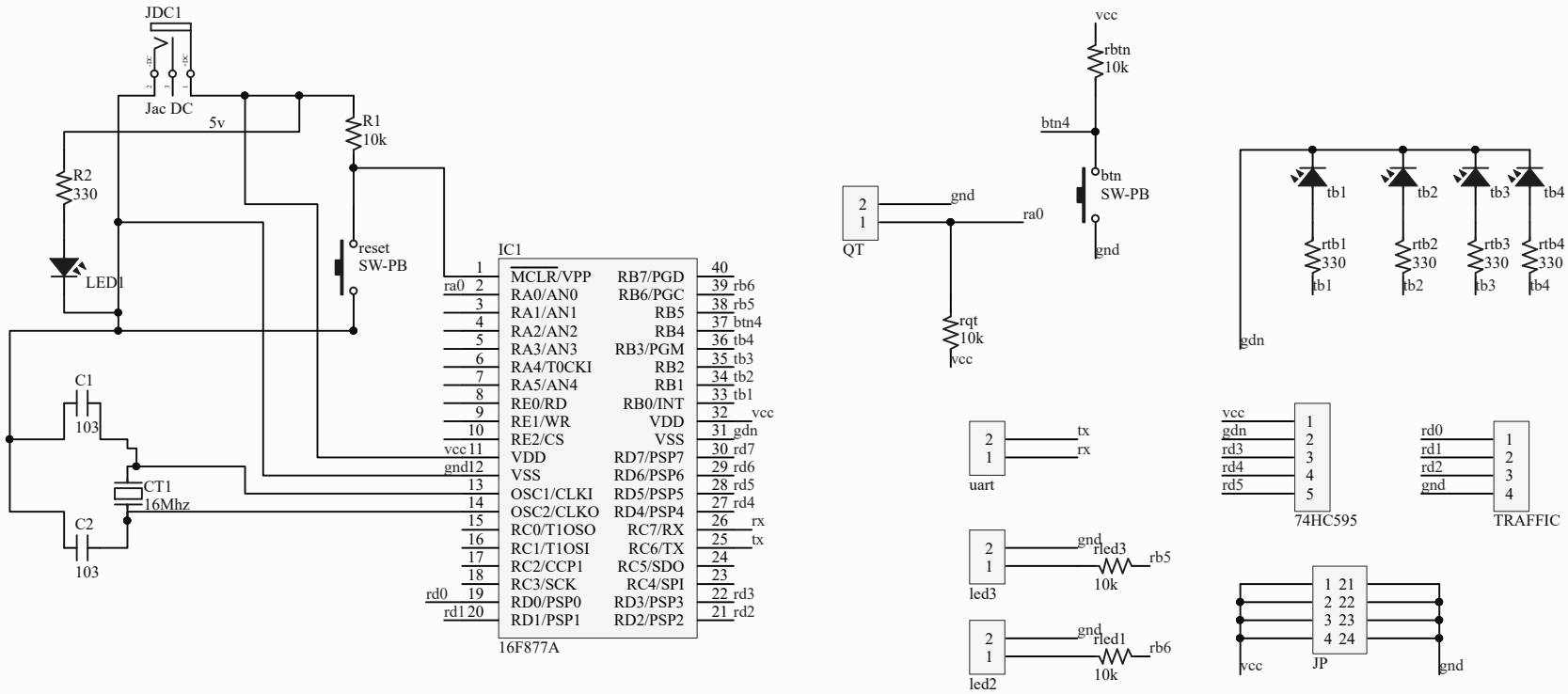


| Title | | |
|---|---|---|
| Size A4 | Number | Revision |
| Date: 20/05/2021 | Sheet of | |
| File: E:\Altium\btl_pic\btl_pic\so_do.SchDoc | Drawn By: | |