Journal of Energy Storage 84 (2024) 110856

Contents lists available at ScienceDirect

Journal of Energy Storage

journal homepage: www.elsevier.com/locate/est

Research papers

Design of a portable electrochemical impedance spectroscopy measurement system based on AD5941 for lithium-ion batteries

Jiahao Wu [a,b], Wenqi Bai [c], Luping Zhang [a,b], Xinyi Zhang [a,b], Haijun Lin [a,b], Houde Dai [d], Jinjin Liu [e], Fu Zhang [a,b,*], Yuxiang Yang [a,b,*]

[a] Department of Electronics, Hunan Normal University, Changsha 410081, China
[b] Institute of Interdisciplinary Studies, Hunan Normal University, Changsha 410081, China
[c] Hunan Institute of Metrology and Test, Changsha 410014, China
[d] Quanzhou Institute of Equipment Manufacturing, Fujian Institute of Research on the Structure of Matter, Chinese Academy of Sciences, Quanzhou 362216, China
[e] Department of Electronics, Hunan University of Technology and Business Changsha 410205, China

ARTICLE INFO

Keywords:
Lithium-ion batteries
Electrochemical impedance spectroscopy
State of health
AD5941

ABSTRACT

Electrochemical impedance spectroscopy (EIS) is an important indicator of state of health (SOH) for Lithium-ion batteries (LIBs), but its measurement relies mainly on electrochemical workstations that are costly and cannot be used for on-site testing. This paper designs a portable EIS measurement system based on the high-precision impedance converter chip AD5941, which utilizes a wide-frequency constant current source as the excitation signal and detects the LIB's response voltage signal to obtain EIS data ranging from 0.1 Hz to 2 kHz. In addition, a software interface based on LabVIEW is developed for real-time graphically displaying the EIS information. EIS measurement experiments are performed on a NCR-18650B LIB at different charge states in both single-frequency mode and frequency-sweep mode using the newly-designed EIS measurement system. The results show that in single-frequency mode, the impedance measurement error at 1 kHz is below 2.8 % compared with a standard single-frequency electrochemical impedance analyzer. In frequency-sweep mode, the Nyquist plot of the LIB is obtained at different charge states and exhibits good repeatability. Moreover, an effective equivalent circuit analysis of the EIS data was performed, which further substantiates the practical utility of the EIS system in providing valuable insights into the battery's electrochemical behavior. Compared to the traditional EIS measurement systems, the proposed EIS measurement system has the advantages of low cost, easy operation and portability, which exhibits promising prospects for on-site EIS applications.

1. Introduction

With the continuous expansion of markets such as consumer electronics, electric vehicles, and energy storage systems, lithium-ion batteries (LIBs) have emerged as one of the most promising and widely used batteries with the advantages of high power, energy density, long cycle life, and environmental friendliness [1–4]. The detection of the state of health (SOH) of LIBs has always been a hot topic in battery research and applications [5], since the SOH of a battery reflects its lifespan, safety, and performance [6].

Electrochemical impedance spectroscopy (EIS) can be used to assess electrochemical reactions such as internal resistance, electrochemical reaction rate, and electrode potential [6,7]. Therefore, the changes of EIS are closely related to the health status of the battery, making it possible to assess the SOH of LIBs [4,8,9]. However, the conventional EIS workstations are usually complicated to operate, difficult to move, and expensive [10,11], which limit their widespread application. Therefore, it is crucial to measure EIS in an economical and efficient manner for accurate estimation of the SOH of LIBs [11].

Currently, the development of low-cost and portable EIS measurement systems has become an important topic in the field of battery research and applications [12]. Some researchers have developed low-cost EIS measurement systems based on microcontrollers and microprocessors, and have achieved promising experimental results. Wang

Abbreviations: EIS, electrochemical impedance spectroscopy; SOH, state of health; LIBs, lithium-ion batteries; BMS, battery management system; SEI, solid electrolyte interface; DFT, discrete Fourier transform; PCB, printed circuit board; SOC, state of charge.

* Corresponding authors at: Department of Electronics, Hunan Normal University, Changsha, Hunan 410081, China.
E-mail addresses: fuzhang@hunnu.edu.cn (F. Zhang), yuxiang.yang@hunnu.edu.cn (Y. Yang).

https://doi.org/10.1016/j.est.2024.110856
Received 28 August 2023; Received in revised form 17 January 2024; Accepted 5 February 2024
Available online 9 February 2024
2352-152X/© 2024 Published by Elsevier Ltd.

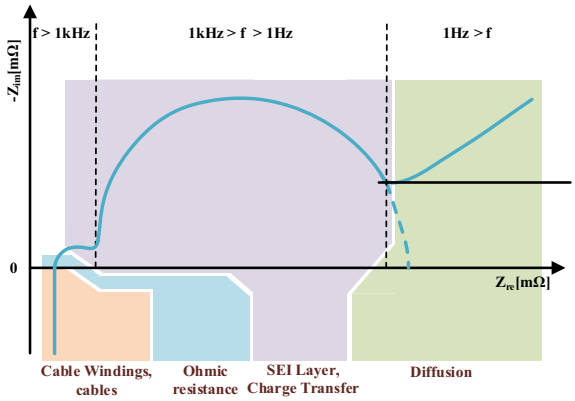

Fig. 1. Typical EIS of LIBs and the corresponding equivalent circuit model.

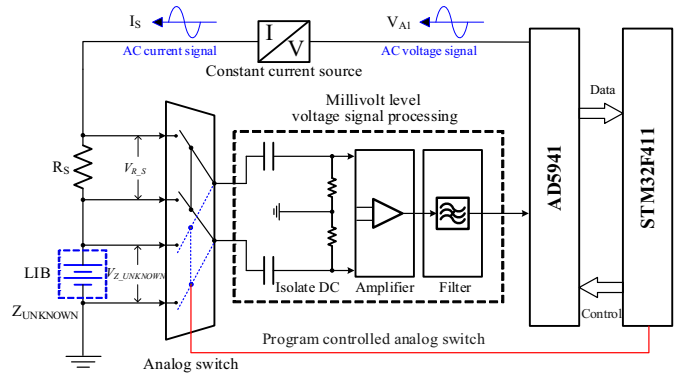

Fig. 2. Block diagram of EIS measurement system.

et al. [13] designed a low-cost and portable vehicle-based EIS measurement system and developed a decoupled state estimation method to reflect the relationship between SOH and EIS, but the maximum relative measurement error could reach 10 %. Varnosfaderani et al. [14] proposed a method to obtain battery harmonic impedance based on boost-buck operations, which introduces harmonic signals by changing the duty cycle around the mean value by small amount.

However, this battery harmonic impedance measurement system requires the capable frequency changer circuit and needs to consider the ripple issues generated in this circuit, which undoubtedly increases the complexity of system design. Carkhuff et al. [15] designed a high-performance battery management system (BMS) that collected EIS data to analyze the battery's status, but its cost is too high to be suitable for general application scenarios. Dam et al. [16] implemented an EIS measurement instrument in the frequency range of 0.1 Hz–100 Hz using a non-isolated full bridge that can superimpose small perturbations on charging and discharging currents, but its high power consumption limits its portability. Carbonnier et al. [17] designed an EIS measurement system based on square wave signal excitation which mainly operates in low-frequency range of 25mHz-25 Hz, but it did not address the accuracy of EIS measurement of LIBs. Landinger et al. [18] proposed an EIS measurement method based on vector network analysis ranging from 1 kHz to 300 MHz, but the authors neither provide detailed information about excitation current, nor compare the results with standard instruments. Wang et al. [19] designed and verified a novel EIS measurement system that combined a high-power dual active bridge converter with distributed sampling units. However, this system exhibited significant measurement errors. More recently, Mattia et al. [20] designed a low-cost EIS system based on a commercial battery monitor for LIBs, but its frequency range is limited up to 500 Hz.

This paper designed a portable and low-cost EIS measurement system based on a high-precision impedance converter chip AD5941 (Analog Device Inc.), which can perform EIS measurements ranging from 0.1 Hz to 2 kHz and can be applied to assess the SOH of LIBs in on-site applications. The main contribution of this paper lies in that it establishes a simple way to build portable and low cost EIS measurement systems with acceptable accuracy, and will lower the threshold for the on-site applications of EIS technology for LIBs in electric vehicles, energy storage systems, and other fields in the future.

The rest of this paper is organized as follows. Section 2 introduces the principles and approaches of EIS measurement, and Section 3 presents the hardware and software design of the EIS measurement system, along with the calculation of EIS magnitude and phase. In Section 4, comparative experiments of EIS measurements on an LIB are made between the developed EIS measurement system and a standard instrument. Finally, Section 5 provides the conclusions.

2. Background of the EIS measurements

EIS is a technology for studying the relationship between measurement frequency and the impedance in electrochemical systems. When a stable small-amplitude AC perturbation is applied to the LIB and the resulting AC response of the LIB is measured, the relationship between the excitation and response signals, represented by voltage and current, can be approximately considered as linear. Then, the impedance value of the LIB at the current frequency can be calculated by applying the Ohm's law. Moreover, the EIS of the LIB can be obtained by performing perturbations at multiple frequencies sequentially [21]. Fig. 1 shows a typical EIS of LIBs, which can reveal many internal processes within the LIB [22–24].

In Fig. 1, the ultra-high-frequency impedance (typically above 10 kHz) reflects the inductive reactance of metallic elements in the battery's wires or cables. The high-frequency impedance (typically above 1 kHz) represents the sum of the resistances of the battery's ohmic resistance, electrolyte, current collector, and other components. The mid-frequency impedance (typically between 1 Hz and 1 kHz) is associated with the electrochemical double-layer resistance at the electrode surface, the solid electrolyte interface (SEI), and charge transfer reactions. The low-frequency impedance (typically below 1 Hz) primarily describes the solid-state diffusion phenomenon within the electrode material.

3. Method

3.1. Hardware system design of EIS measurement

A block diagram of the EIS hardware system is shown in Fig. 2. The EIS measurement system is essentially based on AD5941, a high-precision and low-power impedance converter chip from Analog Device Inc. [25], which can perform impedance measurement at any appointed frequency in the range from DC to 200 kHz. STM32F411, a powerful 32-bit microcontroller from STMicroelectronics, is adopted as the system controller.

First, the AD5941 is controlled by STM32F411 to generate a sinusoidal excitation voltage signal ranging from 0.1 to 2 kHz with the amplitude of 1 V. Then, a wideband constant current source converts the reference voltage signal to an AC current excitation with a constant amplitude of 10 mA, which is applied to the reference resistor R_S and the LIB (unknown impedance, $Z_{UNKNOWN}$). Crucially, the circuit design ensures that the potential of the AC sinusoidal signal at the right end of R_S consistently exceeds the voltage across the battery terminals. This is achieved by meticulously calibrating the AC signal's amplitude and integrating a DC bias into the circuit. Next, an analog switch is controlled by STM32F411 to acquire the response voltage signals (V_{R_S} and $V_{Z_UNKNOWN}$) across the reference resistor R_S and LIB, separately. Since the response voltage at the terminal of the LIB has a small AC

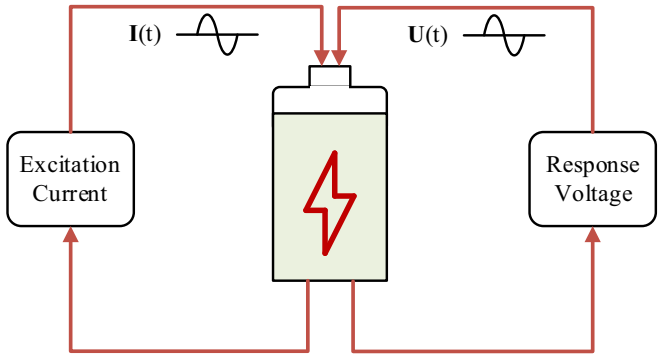

Fig. 3. Schematic diagram of the Kelvin four-terminal EIS measurement method for LIB.

magnitude range in mV but large DC component, a DC isolation circuit is added, followed by a differential amplifying circuit and a filter circuit to eliminate noise and unwanted frequencies. Moreover, the measurement data is sampled in AD5941 with its internal 16-bit sequential comparative analog to digital convertor (ADC). Finally, the amplitude ratio and phase difference between V_{R_S} and $V_{Z_UNKNOWN}$ is calculated in internal Discrete Fourier transform (DFT) engine of AD5941, which is transferred to STM32F411 for further EIS analysis.

It is worth mentioning that this design uses the Kelvin four-terminal EIS measurement method for LIBs, which separates the current excitation circuit from the voltage response circuit, allowing the current excitation signal to flow independently without significant influence on the voltage measurement circuit. Sequentially, it effectively eliminates the effects of wire resistance and contact resistance on the voltage measurement circuit, thus obtaining voltage response signals with reduced errors at the battery terminals [4,26]. The schematic diagram of the Kelvin four-terminal EIS measurement method for LIB is illustrated in Fig. 3.

However, accuracy EIS measurement is still a challenge since it usually spans largely in several magnitudes from mHz to kHz. Moreover, the response signal could be too small to be detected since the impedance amplitude of LIBs is typical in the level of milliohm. Considering the significance of wideband constant current source circuits and amplification circuits in EIS measurement, the detail circuit design and analysis of these two core units in our developed system is given as follows.

3.1.1. Wideband constant current source with a DC-servo loop circuit

The selection of excitation signal is critical in EIS measurements, which can be either in a constant current source or a constant voltage source. The traditional excitation signal applied in EIS measurements is a constant voltage source. If the reference resistor and LIB are connected as parallel circuit in a constant voltage source, an identical voltage would across both the reference resistor and the LIB, which could lead to uneven current distribution and significant fluctuations due to inherent impedance variability of LIBs, particularly in the milliohm range. For example, a typical internal resistance of an LIB such as 18,650 cell varies around 30–100 mΩ. If a constant voltage source with a magnitude of 300 mV is applied, the current through the circuit could change in 3-10 A, which could result in the entire system operating at high power and instable [24,27]. While if the reference resistor and LIB are connected as series circuit in a constant voltage source, the impedance of the series circuit would affect the voltage difference across both the reference resistor and the measured battery terminal, thereby yielding inaccurate and inconsistent impedance measurements [28]. Therefore, it tends to be less favorable for EIS measurements in a traditional constant voltage source.

Conversely, the application of a constant current source presents a more uniform and controlled methodology in EIS measurements since the current passing through the reference resistor and the LIB is

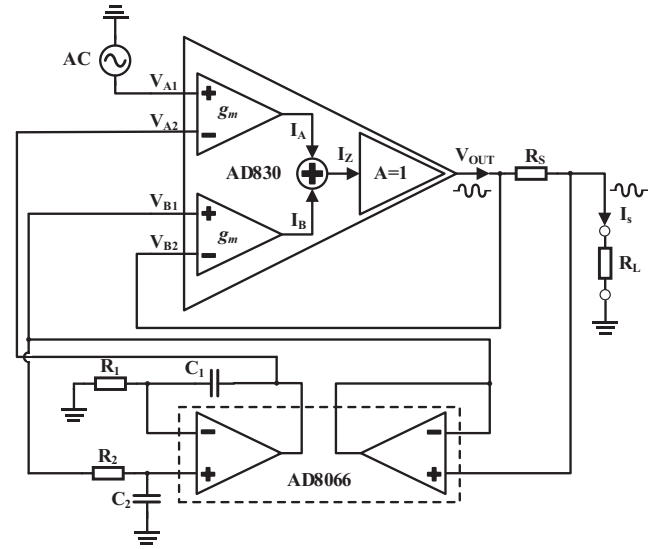

Fig. 4. Schematic diagram of the AD830-based wideband constant current circuit.

identical. By maintaining a consistent current flow through the circuit, it facilitates direct and precise measurement of the voltage response across the LIB, irrespective of its internal impedance variations. This arrangement is particularly adept at addressing the low and fluctuating internal impedance characteristic of LIBs, thereby ensuring enhanced accuracy and reliability in EIS measurements.

However, it is a challenge to use a conventional constant current source as the excitation for EIS measurement of LIBs that present both extremely small internal impedance values and a significant DC bias across their terminals. To ensure the resulting AC component of the response voltage could overwhelm its DC component for EIS measurement of LIBs, the constant current source should have the capacity to generate a current signal with large AC amplitude and as low as DC bias.

Here, a wideband constant current source with a DC- servo loop circuit is developed in our EIS measurement system, which can generate the maximum output magnitude of 60 mA at the frequency up to 1 MHz [29]. In this paper, the constant current source is designed to produce an output current of 10 mA in 0.1-2 kHz in the developed system, which adequately satisfies most EIS measurement requirements for LIBs. The schematic diagram of the constant current source circuit is shown in Fig. 4. The constant current source is mainly composed of a differential difference amplifiers (DDA) AD830 and a 0.1 % precision resistor R_S, which has the advantages of fully differential inputs, high linearity, high output impedance, and wide frequency range.

Let $V_A = V_{A1} - V_{A2}$ and $V_B = V_{B1} - V_{B2}$, the open-loop equation can be calculated based on the operational amplifier characteristics as

$$V_{OUT} = A(V_A - V_B) \tag{1}$$

where A represents the open-loop gain of the operational amplifier.

The specific working principle of AD830 is as follows [30]. First, the excitation voltage is applied to its input port A, and the corresponding response current signal I_A is generated through the transconductance conversion stage g_m of the operational amplifier. Then, I_A is summed at the high input impedance port with I_B generated by the transconductance conversion of its input port B. Due to the effect of negative feedback, I_Z flowing through the input of the follower is approximately zero as shown in Eq. (2) as

$$I_Z = I_A + I_B \approx 0 \tag{2}$$

Therefore, the voltage value on the input port B is equal in magnitude but opposite to that of the input port A, which is expressed by Eq. (3)

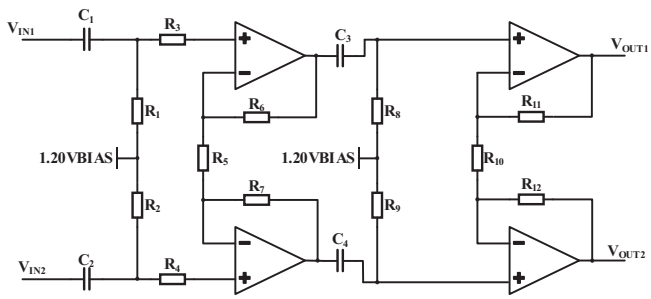

Fig. 5. Differential amplifier circuit schematic.

$$V_{B2} - V_{B1} = V_{A1} - V_{A2} \tag{3}$$

According to Eq. (3), the voltage difference between the two ends of the precision resistor R_S can be deduced as -V_{A1}. Moreover, because of the "virtual break" of the operational amplifier, the current flowing through R_S is equal to the current flowing through the load R_L. Finally, the output current I_S can be calculated using Eq. (4)

$$I_S = -\frac{V_{A1}}{R_S} \tag{4}$$

Set $V_{A1} = 1$ V at all the frequencies, and $R_S = 100\Omega$, then I_S has an amplitude of 10 mA.

The DC servo loop circuit is mainly composed of a FastFET amplifiers AD8066, two resistors R_1, R_2 and two capacitors C_1, C_2, which effectively isolates the DC current and reduces common-mode interference to obtain a more stable AC current. R_1, R_2, C_1, and C_2 form two sets of second-order RC active low-pass filters, with the transfer function given by

$$G(S) = \frac{1 + sR_1C_1}{s^2R_1C_1R_2C_2 + sR_1C_1} \tag{5}$$

where $s = j\omega$; j is the imaginary unit and ω is the angular frequency.

Let f_0 be the cutoff frequency and ω_0 be the cutoff angular frequency, then

$$20lg(|G(\omega_0)|) = -3 \tag{6}$$

Solving Eqs. (5) and (6) for $\omega_0 = 2\pi f_0$ gives:

$$f_0 = \frac{1}{2\pi}\sqrt{\frac{R_1C_1 + \left(8R_2^2C_2^2 + R_1^2C_1^2\right)^{\frac{1}{2}}}{2R_2^2C_2^2R_1C_1}} \tag{7}$$

Let $R_1 = R_2 = R$ and $C_1 = C_2 = C$, then f_0 can be further simplify as:

$$f_0 \approx 0.20\frac{1}{RC} \tag{8}$$

Set $R_1 = R_2 = 2M\Omega$ and $C_1 = C_2 = 1\mu$F, then $f_0 \approx 0.1$Hz.

Finally, the DC component of the output current I_S passes through the DC servo loop circuit, and feedback to the input (V_{A2}) of AD830, which can be eliminated through signal summation.

3.1.2. Differential amplification circuit

Since the response voltage signal across the terminals of the LIB in EIS measurement has both small AC amplitude ranging from 1mVpp to 10mVpp and large DC bias (inherent voltage output at the LIB) ranging from 3.3 V to 4.2 V, it is necessary to design a differential amplification circuit to amplify the AC component while blocking its DC component. The differential amplifier circuit is shown in Fig. 5.

Mathematical relationship between input and output AC voltages can be expressed as follows:

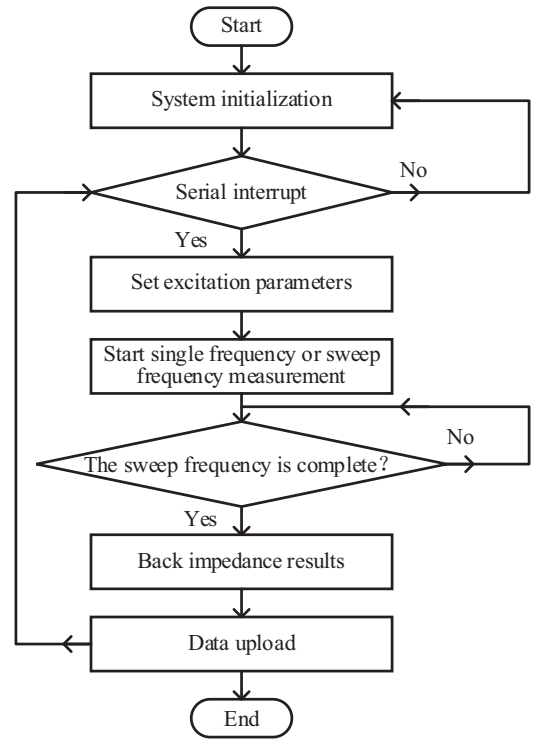

Fig. 6. Main software flowchart.

$$V_{OUT1} - V_{OUT2} = (V_{IN1} - V_{IN2}) \times \frac{R_5 + R_6 + R_7}{R_5} \times \frac{R_{10} + R_{11} + R_{12}}{R_{10}} \tag{9}$$

where $R_6 = R_7 = R_{11} = R_{12} = 10k\Omega$, $R_5 = R_{10} = 1k\Omega$ and therefore the AC amplification factor is set as 625.

3.2. Calculation of amplitude and phase of EIS

The EIS of LIB ($Z_{UNKNOWN}$) can be determined by calculating the magnitude and phase of the response voltages across the reference resistor's R_S and LIB, respectively.

The magnitude of the response voltage V_{R_S} across the reference resistor R_S can be represented by Eq. (10)

$$V_{R_S} = \sqrt{{R_R}^2 + {I_R}^2} \times I_s sin(2\pi f_0 t + \varphi_0) \tag{10}$$

where R_R and I_R are the real and imaginary parts of R_S, respectively; I_S, f_0 and φ_0 are the amplitude, frequency and phase of the excitation current, respectively.

Moreover, the phase of V_{R_S} is φ_0, the same as the phase of the excitation current, since the response voltage across R_S is in-phase with the excitation current.

Similarly, the magnitude of the response voltage $V_{Z_UNKNOWN}$ across $Z_{UNKNOWN}$ can be expressed by Eq. (11)

$$V_{Z_UNKNOWN} = \sqrt{{R_Z}^2 + {I_Z}^2} \times Isin(2\pi ft + \varphi_1) \tag{11}$$

where R_Z and I_Z represent the real and imaginary parts of $Z_{UNKNOWN}$, respectively, and φ_1 is the phase shift between the excitation current and the response voltage due to internal electrochemical components.

Combined with Eqs. (10) and (11), the phase of the LIB at frequency f_0 can be expressed by Eq. (12), while its magnitude can be expressed by Eq. (13)

$$Z_{PHASE} = \varphi_1 - \varphi_0 \tag{12}$$

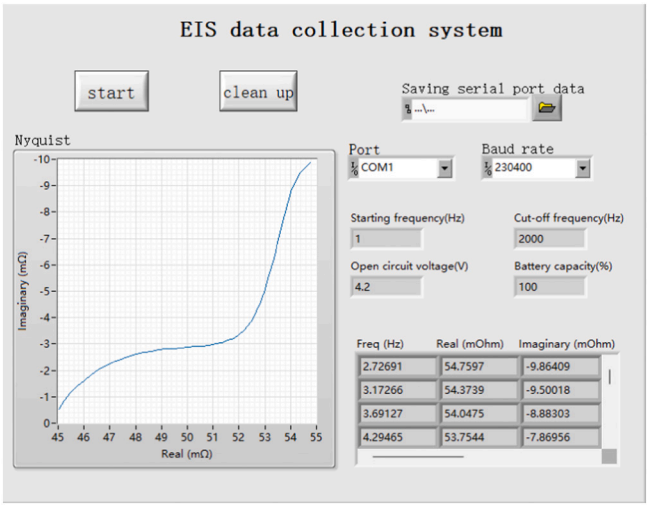

Fig. 7. LabVIEW interface for EIS data collection.

$$Z_{UNKNOWN} = \frac{V_{Z_{UNKNOWN}}}{V_{R_S}} \times R_S \tag{13}$$

The real part R_Z and imaginary part I_Z of the LIB impedance at frequency f_0 can be calculated as

$$R_Z = |Z_{UNKNOWN}| \times cos(Z_{PHASE}) \tag{14}$$

$$I_Z = |Z_{UNKNOWN}| \times sin(Z_{PHASE}) \tag{15}$$

Finally, the EIS of the LIB can be calculated at different measurement frequencies.

3.3. Software system design of EIS measurement

The main software flowchart for EIS measurement is illustrated in Fig. 6, which can be divided in the following steps:

Step 1: System initialization mainly includes configuration of system clock, SPI bus, serial communication module, GPIO initialization, AD5941 impedance measurement module initialization, and interrupt pin configuration.

Step 2: Receive the acquisition instruction from the master controller.

Step 3: The MCU STM32F411 configures the AD5941 through its SPI interface to set basic measurement parameters, including the scanning frequency range, frequency step, AC excitation voltage, and DC excitation voltage.

Step 4: Check if the constant current source is running. If yes, go to Step 5, else go to Step 3.

Step 5: The MCU queries the completion status of the internal DFT engine in the AD5941. If yes, go to Step 6, else go to Step 3.

Step 6: The voltage values corresponding to the obtained reference resistance impedance and unknown impedance are stored into the FIFO of the AD5941 respectively.

Step 7: The MCU queries the completion status of the frequency sweep by accessing the internal status register of the AD5941. If frequency sweep completes, go to Step 8, else go to Step 9.

Step 8: Send an instruction to increase the measurement frequency or repeatedly send the same frequency measurement instruction, then go to Step 6.

Step 9: Calculate EIS and upload to PC through serial communication.

Step 10: Generate Nyquist plots and other information using LabVIEW.

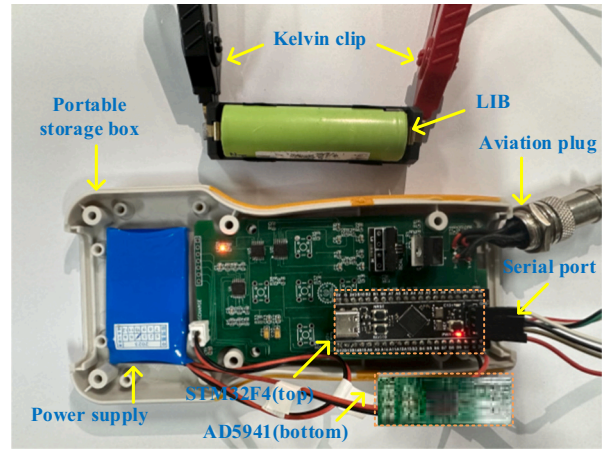

Fig. 8. Photo of the designed EIS measurement system.

Table 1
Panasonic NCR-18650B basic parameters.

Name	Value and description
Positive/Negative electrode material	NCA/Graphite
Nominal capacity (mAh)	3400
Charge cut-off voltage (V)	4.2
Discharge cut-off voltage (V)	2.5
Maximum charging current (mA)	3400(1C)
Maximum continuous discharge current (mA)	6800(2C)

The software interface developed by LabVIEW software is illustrated in Fig. 7. The main function includes serial communication, human-machine interaction, and real-time data logging. The human-machine interaction component involves real-time display of the real part, imaginary part, and open-circuit voltage of the LIB. The data is simultaneously saved in a text document for historical reference and data analysis purposes.

4. Experiments

A photo of the presented EIS measurement system is shown in Fig. 8. The PCB board has the dimensions of 110 mm*52.5 mm, which can be placed in a portable storage box. The EIS measurement system is equipped with external power supply, Kelvin clips and aviation plugs for four-terminal measurement, and a serial port for data communication with LabVIEW.

The LIB under test is a Panasonic NCR-18650B battery, and its key parameters are shown in Table 1.

4.1. Reproducibility and accuracy verification

4.1.1. Single-frequency measurement

To verify repeatability and accuracy of the designed EIS measurement system, experimental measurements were compared using the Fluke-BT5300 high-precision battery tester under the same environmental conditions. Each battery was measured five times at 1 kHz under the condition of 100 % state of charge (SOC), and the measured average internal resistance values are shown in Table 2.

It can be observed from Table 2 that the average internal resistance measured by using the developed measurement device has an absolute error around 1.3 mΩ lower than the results from the Fluke-BT5300 high-precision battery tester, with the relative error less than 2.8 %. This indicates that the designed EIS measurement device could have a system error due to the effect of Kelvin clips and aviation plugs, which could be calibrated in further EIS measurement.

Table 2
Comparison of single-frequency impedance measurement results between Fluke-BT5300 (reference) and the developed EIS measurement device.

Battery number	Fluke-BT5300/mΩ						The developed measurement device/mΩ						Absolute Error/mΩ	Voltage/V
	1	2	3	4	5	Average Value	1	2	3	4	5	Average Value		
1	51.1	51.1	51.1	51.2	51.1	51.1	49.8	49.9	49.8	49.8	49.8	49.8	1.3	4.155
2	48.4	48.4	48.3	48.4	48.4	48.4	47.0	47.0	47.0	47.0	46.9	47.0	1.4	4.162
3	49.5	49.5	49.5	49.5	49.6	49.5	48.3	48.3	48.3	48.3	48.1	48.3	1.2	4.175
4	48.3	48.2	48.3	48.3	48.3	48.3	46.9	46.9	46.9	46.9	46.8	46.9	1.4	4.167

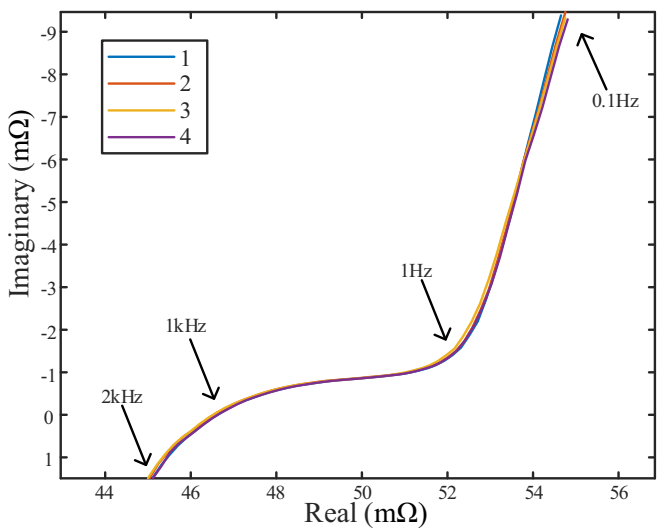

Fig. 9. EIS data obtained from a LIB in four consecutive measurements using the developed EIS device.

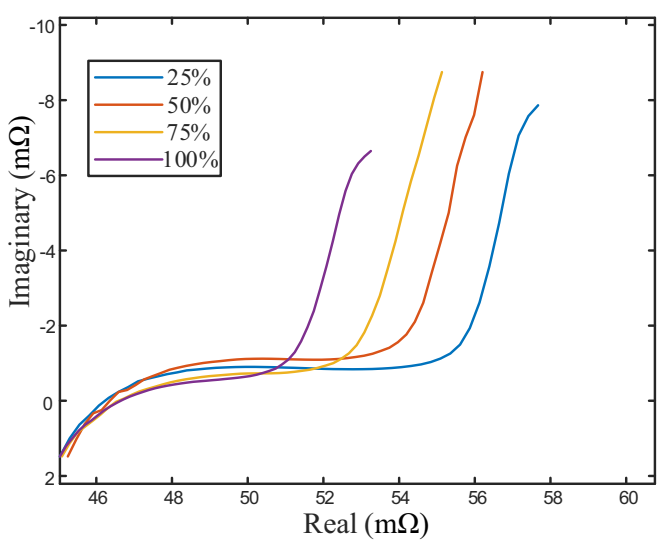

Fig. 10. Nyquist plots of LIB at different SOC levels.

4.1.2. Multi-frequency measurement

To verify multi-frequency repeatability of the designed EIS measurement system, the impedance spectrum of a Panasonic NCR-18650B LIB was measured over a frequency range of 0.1 Hz to 2 kHz.

The multi-frequency EIS measurement data obtained from the LIB are shown in Fig. 9. It can be observed that the EIS curves from the four consecutive measurements overlapped with good repeatability, especially in the mid-to-high frequency range (1 Hz-1 kHz). However, the difference increases at low-frequency range, and reaches the maximum at 0.1 Hz.

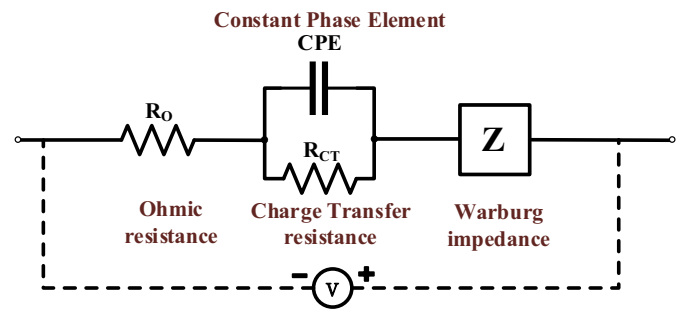

Fig. 11. The improved Randles equivalent circuit model.

In addition, EIS measurements were performed on a LIB at the capacity levels of 25 %, 50 %, 75 %, and 100 %, and the Nyquist plots of EIS from an NCR-18650B at different SOC levels are represented in Fig. 10. It is clear that all the EIS curves exhibit the similar shape, while the most significant changes can be observed in the regions of low-frequency EIS curve as the SOC level of the LIB increases. It can be explained that the reduction of SOC will cause the ion transmission speed inside the electrode to slow down, and the electrochemical double-layer resistance on the electrode surface will also decrease. These two factors together lead to an increase in the impedance value at the low frequency region as a result of the reduction of SOC. Moreover, it can be seen that the high-frequency EIS above 1 kHz remains almost constant in real part and close to zero in imaginary part in all the different SOC levels. It can be explained that the EIS of LIBs at high-frequencies mainly reflects the pure ohmic resistance of the LIB, which indicates the overall aging characteristics of the LIB and is independent of the SOC of LIBs [31,32]. Besides, the semicircular shape in the mid-frequency EIS is mainly related to the relaxation time of the double-layer capacitance and the SEI membrane capacitance within the LIBs [33]. These experimental results measured from the developed EIS measurement system show high reliability according to former research.

Based on the impedance spectra measured at different SOC as depicted in Fig. 10, it is feasible to estimate the LIB equivalent circuit. As shown in Fig. 11, the improved Randles equivalent circuit model was utilized, which integrates solution resistance R_0, charge transfer resistance R_{CT}, constant phase element CPE and Warburg element Z [34]. The merits of this model are evident in its multifunctionality, enabling simultaneous characterization of electrolyte resistance, electrode surface processes, and ion diffusion. This makes it highly versatile for a broad spectrum of electrochemical systems. Furthermore, its applicability extends to providing critical insights into electrochemical behaviors.

Equivalent circuit fitting was conducted using Zview software, and the resulting data and the estimation errors for all the circuits parameters on different SOCs are presented in Table 3.

Differences in these circuit parameters at various SOCs are evident. With the increase of SOC, a decline in R1 implies enhanced electrolyte conductivity, likely due to higher ionic concentration or improved ion migration. The reduction in R2 suggests more efficient electrochemical reactions. An upward trend in CPE-T with SOC indicates possible increases in electrode surface area or modifications at the electrode/

Table 3
Equivalent Circuit Parameter Values Under Different SOC.

	R1[a]	Error	R2[b]	Error	CPE1-T[c]	Error	CPE1-P[d]	Error	W1-R[e]	Error[f]
25 %	45.901	0.09	8.491	0.13	0.0003	0.00009	0.930	0.03	20.370	0.73
50 %	45.845	0.15	7.105	0.13	0.0003	0.00004	0.925	0.01	24.011	0.56
75 %	45.473	0.11	6.932	0.16	0.0004	0.00006	0.908	0.02	25.510	0.54
100 %	45.070	0.12	6.892	0.11	0.0006	0.00009	0.802	0.02	29.850	0.61

[a] R1 represents ohmic resistance of the electrolyte, in mΩ.
[b] R2 represents charge transfer resistance, in mΩ.
[c] CPE1-T represents magnitude of CPE, in Farad.
[d] CPE1-P represents phase associated with the CPE, in rad.
[e] W1-R represents frequency-dependent impedance of Warburg impedance due to mass transfer limitations, in mΩ.
[f] The Error estimates are calculated by testing several solutions near the "best fit". For example, if the best value for a particular resistor is 100 mΩ, the value is increased until the goodness of fit starts to decrease. If 98 and 102 mΩ produces a very similar goodness of fit, but 97 and 103 mΩ produces a poorer fit, the Error is reported as 2 mΩ.

Table 4
Performance specifications of some EIS measurement systems.

Cited Paper	Battery Capacity[a]	Excitation Method	Excitation Amplitude	Measurement Frequency	SOC%[b]	Measurement Error (%)	Portability
[13]	9300mAh (LiFePO4)	Current	–[c]	10mHz-1 kHz	30.50.70	1–10	Yes
[14]	2500mAh (LiFePO4)	Current	–	1 Hz-2 kHz	100	–	–
[16]	9000mAh (LiFePO4)	Current	100 mA	0.1 Hz–100 Hz	70.100	–	–
[15]	5300mAh (LiFePO4)	Current	25 mA	1 Hz-1 kHz	50	2	Yes
[17]	3000mAh (Sony-18650HC)	Square current	150 mA	25mHz-25 Hz	–	–	–
[18]	2600mAh (Samsung-18,650)	–	–	1 kHz-300 MHz	50	–	–
[19]	8000mAh (LiFePO4)	Current	100 mA	0.1 Hz–500 Hz	10.30.50.60.70	5.4–6.9	–
Our design	3400mAh (NCR-18650)	Current	10 mA	0.1 Hz-2 kHz	25.50.75.100	2.8	Yes

[a] Parentheses indicate the positive electrode material of the battery.
[b] SOC represents the current capacity of the tested lithium battery.
[c] "–" in the table indicates no relevant information.

electrolyte interface. The rise in W1-R at higher SOCs points to more significant ion diffusion barriers. These trends from EIS data underscore the utility of such measurements in advancing battery research.

4.2. Comparation of EIS measurement systems

Table 4 summarizes the basic performance specifications of different EIS measurement systems mentioned in Introduction Section, such as measurement frequency, battery capacity and SOC under test, the type and amplitude of excitation signal, measurement error and portability. It is clear that the developed EIS measurement system not only covers a wide range of EIS measurements compared to other measurement systems, but has the advantages of low measurement errors, low cost, portability and the capability of data communication and display for further EIS analysis.

5. Conclusion

This paper proposes a low-cost and portable EIS measurement system based on AD5941, which can operate in a broad frequency range from 0.1 Hz to 2 kHz. The EIS measurement experiments on NCR-18650B LIB at different charge states not only demonstrated its comparable accuracy (relative error less than 2.8 %) and good repeatability, but also allowed for effective equivalent circuit analysis based on the battery EIS data, which could provide a deeper understanding of the electrochemical characteristics of LIBs under different conditions. Compared with recently developed low-cost EIS systems, the proposed EIS system achieves lower measurement errors. The portability of the proposed EIS system makes it possible to be integrated in battery management systems, and find broad on-site applications in electric vehicles, energy storage systems and other fields in the future.

CRediT authorship contribution statement

Jiahao Wu: Conceptualization, Formal analysis, Investigation, Methodology, Software, Validation, Writing – original draft, Writing – review & editing. **Wenqi Bai:** Investigation, Methodology, Resources. **Luping Zhang:** Methodology, Software, Validation, Visualization. **Xinyi Zhang:** Data curation, Validation, Visualization. **Haijun Lin:** Methodology, Resources. **Houde Dai:** Resources, Software, Writing – review & editing. **Jinjin Liu:** Investigation, Methodology. **Fu Zhang:** Conceptualization, Formal analysis, Project administration, Supervision, Writing – original draft, Writing – review & editing. **Yuxiang Yang:** Funding acquisition, Resources, Supervision, Writing – original draft, Writing – review & editing.

Declaration of competing interest

The authors declare that they have no known competing financial interests or personal relationships that could have appeared to influence the work reported in this paper.

Data availability

All data generated or analyzed during this study are included in this article.

Acknowledgements

This work was supported in part by the National Natural Science Foundation of China (Grant Nos. 32201134, 32171366), Natural Science Foundation of Hunan Province (Grant No. 2022JJ90035), and the Project of Institute of Interdisciplinary Studies in Hunan Normal University (Grant No. 2023JC204).

References

[1] Y. Zhang, X. Du, J. Meng, Q. Jiang, J. Peng, T. Liu, Rapid broadband impedance acquisition of lithium-ion batteries based on measurement evaluating and impedance filtering, IEEE Trans. Transp Eelctr. 9 (4) (2023) 4888–4897.

[2] C. She, Y. Li, C. Zou, T. Wik, Z. Wang, F. Sun, Offline and online blended machine learning for lithium-ion battery health state estimation, IEEE Trans. Transp Eelctr. 8 (2) (2021) 1604–1618.

[3] W.J. Han, T. Wik, A. Kersten, G.Z. Dong, C.F. Zou, Next-generation battery management systems: dynamic reconfiguration, IEEE Ind. Electron. Mag. 14 (4) (2020) 20–31.

[4] M. Koseoglou, E. Tsioumas, D. Papagiannis, N. Jabbour, C. Mademlis, A novel on-board electrochemical impedance spectroscopy system for real-time battery impedance estimation, IEEE Trans. Power Electron. 36 (9) (2021) 10776–10787.

[5] A.Y. Kallel, O. Kanoun, On the design of multisine signals for maintaining stability condition in impedance spectroscopy measurements of batteries, J. Energy Storage 58 (2023) 106267.

[6] M. Faraji-Niri, M. Rashid, J. Sansom, M. Sheikh, D. Widanage, J. Marco, Accelerated state of health estimation of second life lithium-ion batteries via electrochemical impedance spectroscopy tests and machine learning techniques, J. Energy Storage 58 (2023) 106295.

[7] K. Mc Carthy, H. Gullapalli, K.M. Ryan, T. Kennedy, Electrochemical impedance correlation analysis for the estimation of Li-ion battery state of charge, state of health and internal temperature, J. Energy Storage 50 (2022) 104608.

[8] E. Locorotondo, V. Cultrera, L. Pugi, L. Berzi, M. Pierini, G. Lutzemberger, Development of a battery real-time state of health diagnosis based on fast impedance measurements, J. Energy Storage 38 (2021) 102566.

[9] M. Messing, T. Shoa, S. Habibi, Estimating battery state of health using electrochemical impedance spectroscopy and the relaxation effect, J. Energy Storage 43 (2021) 103210.

[10] Y. Kim, H. Park, K. Shin, G. Henkelman, J.H. Warner, A. Manthiram, Rational design of coating ions via advantageous surface reconstruction in High-nickel layered oxide cathodes for lithium-ion batteries, Adv. Energy Mater. 11 (38) (2021) 2101112.

[11] M. Crescentini, A. De Angelis, R. Ramilli, G. De Angelis, M. Tartagni, A. Moschitta, P.A. Traverso, P. Carbone, Online EIS and diagnostics on lithium-ion batteries by means of low-power integrated sensing and parametric modeling, IEEE Trans. Instrum. Meas. 70 (2020) 1–11.

[12] Z.B. Wei, J. Hu, H.W. He, Y. Li, B.Y. Xiong, Load current and state-of-charge Coestimation for current sensor-free lithium-ion battery, IEEE Trans. Power Electron. 36 (10) (2021) 10970–10975.

[13] X. Wang, X. Wei, H. Dai, Q. Wu, State estimation of lithium ion battery based on electrochemical impedance spectroscopy with on-board impedance measurement system[C], in: 2015 IEEE Vehicle Power and Propulsion Conference (VPPC), 2015, pp. 1–5.

[14] M.A. Varnosfaderani, D. Strickland, Online impedance spectroscopy estimation of a battery[C], in: 2016 18th European Conference on Power Electronics and Applications (EPE'16 ECCE Europe), 2016, pp. 1–10.

[15] B.G. Carkhuff, P.A. Demirev, R. Srinivasan, Impedance-based battery management system for safety monitoring of Lithium-ion batteries, IEEE Trans. Ind. Electron. 65 (8) (2018) 6497–6504.

[16] S.K. DamJohn, V. High-resolution, Converter for battery impedance spectroscopy, IEEE Trans. Ind. Appl. 54 (2) (2017) 1502–1512.

[17] H. Carbonnier, H. Barde, L. Riga, A. Carre, Electrochemical impedance spectroscopy for online satellite battery monitoring using square wave excitation [C], in: 2019 European Space Power Conference (ESPC), 2019, pp. 1–6.

[18] T.F. Landinger, G. Schwarzberger, A. Jossen, A novel method for high frequency battery impedance measurements[C], in: 2019 IEEE International Symposium on Electromagnetic Compatibility, Signal & Power Integrity (EMC+ SIPI), 2019, pp. 106–110.

[19] X. Wang, X. Wei, Q. Chen, H. Dai, A novel system for measuring alternating current impedance spectra of series-connected lithium-ion batteries with a high-power dual active bridge converter and distributed sampling units, IEEE Trans. Ind. Electron. 68 (8) (2020) 7380–7390.

[20] L. Mattia, G. Petrone, F. Pirozzi, W. Zamboni, A low-cost approach to on-board electrochemical impedance spectroscopy for a lithium-ion battery, J. Energy Storage 81 (2024) 110330.

[21] B. Pozo, E.F. de Gorostiza, U. Eletxigerra, J. Mabe, A. Martínez, Self-powered thin-film impedance spectroscopy sensor system to measure corrosion presence in aerogenerators or aircrafts[C], in: Active and Passive Smart Structures and Integrated Systems XIV, 2020, pp. 166–182.

[22] D. Andre, M. Meiler, K. Steiner, C. Wimmer, T. Soczka-Guth, D.U. Sauer, Characterization of high-power lithium-ion batteries by electrochemical impedance spectroscopy. I. Experimental investigation, J. Power Sources 196 (12) (2011) 5334–5341.

[23] J. Zhang, P. Wang, Y.S. Liu, Z. Cheng, Variable-order equivalent circuit modeling and state of charge estimation of lithium-ion battery based on electrochemical impedance spectroscopy, Energies 14 (3) (2021) 769.

[24] H.J. Ruan, B.X. Sun, J.C. Jiang, W.G. Zhang, X.T. He, X.J. Su, J.J. Bian, W.Z. Gao, A modified-electrochemical impedance spectroscopy-based multi-time-scale fractional-order model for lithium-ion batteries, Electrochim. Acta 394 (2021) 139066.

[25] Analog Device Inc. Datasheet from https://www.analog.com/media/en/technical-documentation/data-sheets/ad5940-5941.pdf,.

[26] M. Kasper, A. Leike, J. Thielmann, C. Winkler, N.A. R-Smith, F. Kienberger, Electrochemical impedance spectroscopy error analysis and round robin on dummy cells and lithium-ion-batteries, J. Power Sources 536 (2022) 231407.

[27] P. Lu, M. Li, L. Zhang, L. Zhou, A Novel Fast-EIS Measuring Method And Implementation for Lithium-ion Batteries[C]. 2019 Prognostics and System Health Management Conference (PHM-Qingdao), 2019, pp. 1–6.

[28] W. Li, G.W. Liu, F.H. Yang, Design of automatic measurement system of lithium battery electrochemical impedance spectroscopy based on microcomputer, Appl. Mech. Mater. 241 (2013) 259–264.

[29] F. Zhang, Z. Teng, H. Zhong, Y. Yang, J. Li, J. Sang, Wideband mirrored current source design based on differential difference amplifier for electrical bioimpedance spectroscopy, Biomedical Physics & Engineering Express 4 (2) (2018) 025032.

[30] Analog Device Inc. Datasheet from https://www.analog.com/media/en/technical-documentation/data-sheets/AD830.pdf.

[31] F. Luo, H.H. Huang, L.P. Ni, T. Li, Rapid prediction of the state of health of retired power batteries based on electrochemical impedance spectroscopy, J. Energy Storage 41 (2021) 102866.

[32] K. Laadjal, A.J.M. Cardoso, Estimation of lithium-ion batteries state-condition in electric vehicle applications: issues and state of the art, Electronics 10 (13) (2021) 1588.

[33] R. He, Y. He, W. Xie, B. Guo, S. Yang, Comparative analysis for commercial li-ion batteries degradation using the distribution of relaxation time method based on electrochemical impedance spectroscopy, Energy 263 (2023) 125972.

[34] W. Choi, H.-C. Shin, J.M. Kim, J.-Y. Choi, W.-S. Yoon, Modeling and applications of electrochemical impedance spectroscopy (EIS) for lithium-ion batteries, Journal of Electrochemical Science and Technology 11 (1) (2020) 1–13.