Circuits from the Lab® Reference Designs

Circuits from the Lab® reference designs are engineered and tested for quick and easy system integration to help solve today's analog, mixed-signal, and RF design challenges. For more information and/or support, visit www.analog.com/CN0510.

Devices Connected/Referenced	
AD5941	High Precision, Impedance and Electrochemical Front End
AD8694	Low Cost, Low Noise, CMOS Rail-to-Rail Output Quad Op Amp
ADG636	1 pC Charge Injection, 100 pA Leakage, CMOS ±5 V/+5 V/+3 V Dual SPDT

Electrochemical Impedance Spectroscopy (EIS) for Batteries

EVALUATION AND DESIGN SUPPORT

Circuit Evaluation Boards

Battery Measurement Board (EVAL-AD5941BATZ)
Arduino Form Factor Ultra Low Power Arm® Cortex-M3 Development Platform (EVAL-ADICUP3029)

Design and Integration Files

Schematics, Layout Files, Bill of Materials, Software

CIRCUIT FUNCTION AND BENEFITS

The circuit shown in Figure 1 is an electrochemical impedance spectroscopy (EIS) measurement system for characterizing lithium ion (Li-Ion) and other types of batteries. EIS is a safe perturbation technique used to examine processes occurring inside electrochemical systems. The system measures the impedance of a battery cell over a range of frequencies. The data can determine the state of health (SOH) and state of charge (SOC) of a battery. Using an ultralow power analog front end (AFE), this system is designed to excite and measure current, voltage, or impedance response of a battery.

Aging leads to performance degradation and irreversible changes in battery chemistry. Impedance increases linearly with the decline in capacity. Monitoring the increase in impedance of a battery using EIS can determine the SOH and whether the battery needs replacing, reducing both system downtime and maintenance costs.

Batteries require a current excitation, not voltage, and the impedance values are small, in the milliohm range. This system includes the necessary circuitry to inject a current into the battery and allows for calibration and sensing of the small impedances found in batteries.

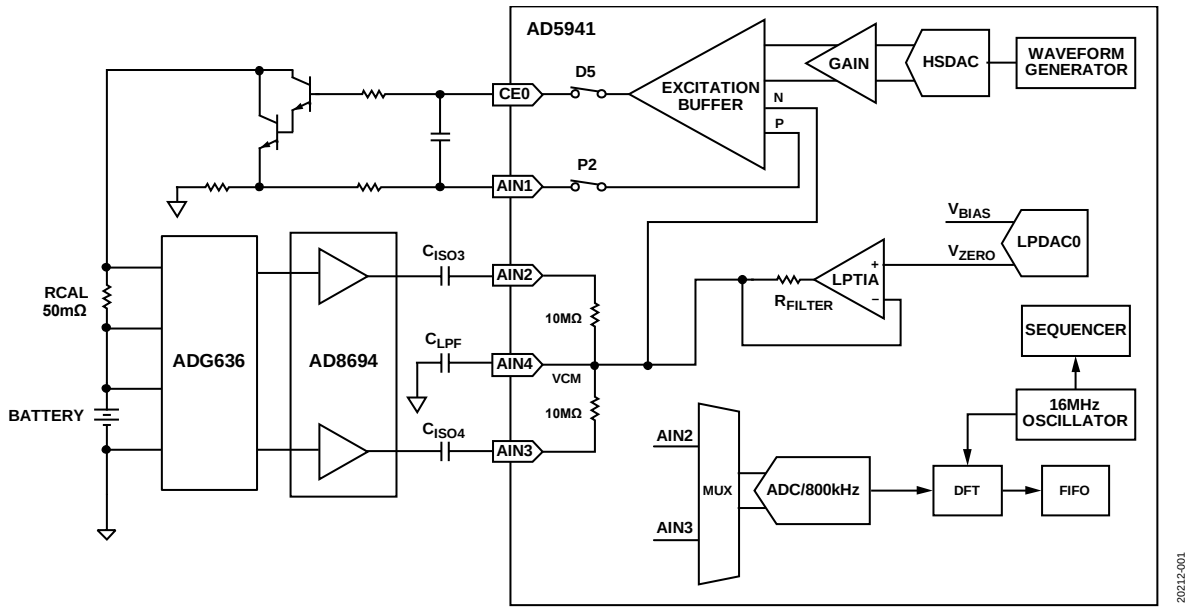

Figure 1. Simplified Circuit Block Diagram

Rev. A

Circuits from the Lab® reference designs from Analog Devices have been designed and built by Analog Devices engineers. Standard engineering practices have been employed in the design and construction of each circuit, and their function and performance have been tested and verified in a lab environment at room temperature. However, you are solely responsible for testing the circuit and determining its suitability and applicability for your use and application. Accordingly, in no event shall Analog Devices be liable for direct, indirect, special, incidental, consequential or punitive damages due to any cause whatsoever connected to the use of any Circuits from the Lab circuits. (Continued on last page)

One Technology Way, P.O. Box 9106, Norwood, MA 02062-9106, U.S.A.
Tel: 781.329.4700 **www.analog.com**
Fax: 781.461.3113 **©2019–2020 Analog Devices, Inc. All rights reserved.**

Downloaded from Arrow.com.

CIRCUIT DESCRIPTION

Battery EIS Theory

Batteries are nonlinear systems; therefore, a small sample of the I-V curve of the cell is examined for the system to behave pseudo linearly. In a pseudo linear system, a sinusoidal input produces a sinusoidal output at the exact same frequency but with shifted phase and amplitude. In EIS, an ac excitation signal is applied to the battery to obtain the data.

Information from EIS is most frequently represented by a Nyquist plot, but can also be shown using a Bode plot (this circuit note focuses on the most common format). In a Nyquist plot, the negative imaginary component of impedance (y-axis) is plotted against the real component of impedance (x-axis). Different regions of the Nyquist plot correspond to various chemical and physical processes occurring in the battery (see Figure 2).

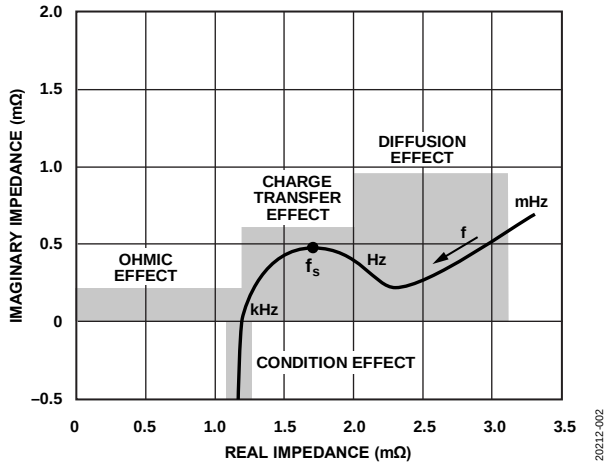

Figure 2: Nyquist Plot for a Battery Showing the Different Regions Corresponding to an Electrochemical Process

These processes are modelled using resistors, capacitors, and a component called the Warburg resistance represented by the letter, W, (described in more detail in the Equivalent Circuit Models (ECM) section). There is no simple electronic component to represent Warburg diffusion resistance.

Equivalent Circuit Models (ECM)

Equivalent circuit models (ECM) use simple electronic circuits (resistors and capacitors) to mimic electrochemical processes. The model uses a simple circuit to represent a complex process to aid analysis and simplify calculations. These models are based on data collected from the battery under test. After the Nyquist plot of the battery is characterized, an ECM can be developed. Most commercial EIS software includes an option to create a specific and unique equivalent circuit model to more closely approximate the shape of the Nyquist plot produced by any particular battery. There are four common parameters that represent battery chemistry when creating a model for a battery.

Electrolytic (Ohmic) Resistance—R_S

- The characteristics of R_S are as follows:
- Corresponds to the resistance of the electrolyte in the battery
- Affected by the electrodes and wire length used when performing the test
- Increases as the battery ages
- Dominant when the frequency is >1 kHz

Double Layer Capacitance—C_{DL}

C_{DL} characteristics are as follows:

- Occurs between the electrode and the electrolyte
- Composed of two parallel layers of opposite charges encompassing the electrode
- Dominant in the 1 Hz to 1 kHz frequency range

Charge Transfer Resistance—R_{CT}

- Resistance occurs from transferring electrons from one phase to another, that is, a solid (electrode) to a liquid (electrolyte)
- Changes with temperature and state-of-charge of the battery
- Dominant in the 1 Hz to 1 kHz frequency range

Warburg (Diffusion) Resistance—W

- Represents a resistance to mass transfer, that is, diffusion control
- Typically exhibits a 45° phase shift
- Dominant when the frequency is <1 Hz

Table 1 provides the symbols and expressions for each ECM component.

Table 1. ECM Components

Element	Symbol	Expresssion
Resistance, R		$Z_R = R$
Capacitance, C		$Z_C = \frac{-j}{\omega C}$
Warburg Impedance, W	W	$Z_W = \frac{1}{Y_0\sqrt{j\omega}}$

Building the Battery ECM

Developing an equivalent circuit model (ECM) is often an empirical process, requiring experimentation with various equivalent circuit models until the model matches the measured Nyquist plot.

The following sections cover how to create a typical battery model.

Downloaded from Arrow.com.

Randel Circuit Model Ohmic and Charge Transfer Effect

The Randel circuit is the most common ECM. The Randel circuit includes an electrolyte resistance (R_S), a double layer capacitor (C_{DL}), and a charge transfer resistance (R_{CT}). The double-layer capacitance is in parallel with the charge-transfer resistance, which creates a semicircle simulation shape.

In addition to being a useful basic model, the simplified Randel circuit is the starting point for other more complex models.

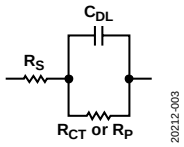

Figure 3. Randel Circuit

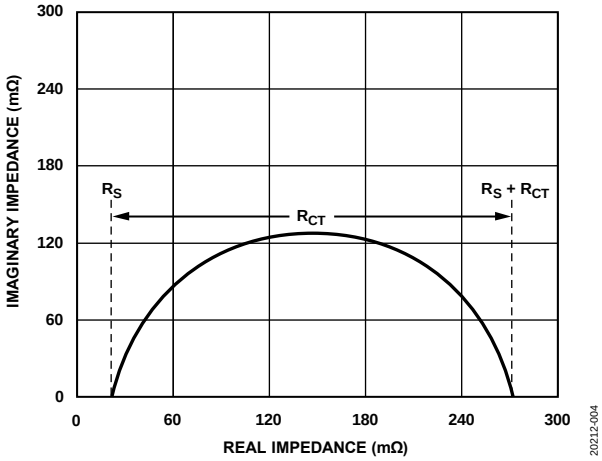

Figure 4. Simplified Randel Circuit Diagram Producing the Nyquist Plot

The Nyquist plot for a simplified Randel circuit is always a semicircle. The electrolyte resistance (R_S) is determined by reading the real axis value at the high frequency intercept point of the battery characterization, that is, where the line crosses the x-axis on the left side of the plot, which is the high frequency zone. In Figure 4, the electrolyte resistance (R_S) is the intercept point near the origin of the Nyquist plot, which is 30 Ω. The real axis value at the other (low frequency) intercept point is the sum of the charge transfer resistance (R_{CT}) and the electrolyte resistance (in this case 270 Ω). The diameter of the semicircle is therefore equal to the charge-transfer resistance (R_{CT}).

Warburg Circuit Model—Diffusion Effect

When Warburg resistance is modeled, the component, W, is added in series with R_{CT} (see Figure 5). The addition of Warburg resistance produces the 45° line, evident in the low frequency region of the plot.

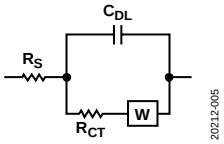

Figure 5. Warburg Circuit Model—Diffusion Effect

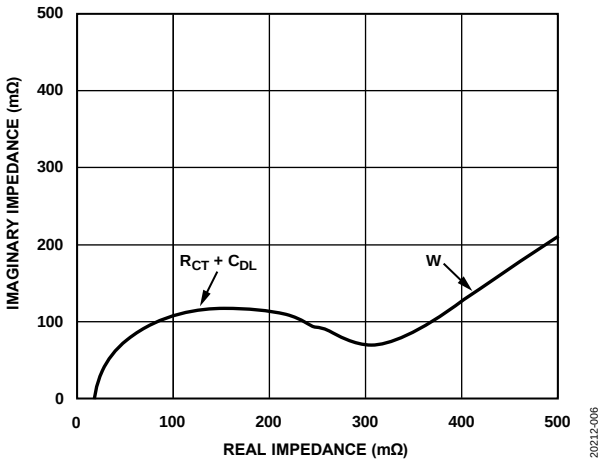

Figure 6. ECM with Diffusion Effects

Combined Randel and Warburg Circuit Model

Some batteries depict two semicircles. The first semicircle corresponds to the solid electrolyte interface (SEI). SEI growth results from irreversible electrochemical decomposition of the electrolyte. In the case of Li-Ion batteries, SEI forms at the negative electrode as the battery ages. The product of this decomposition forms a solid layer on the surface of the electrode.

After an initial SEI layer has formed, the inability of electrolyte molecules to travel through the SEI to the active material surface where they could react with lithium ions and electrons, suppresses further SEI growth.

Two Randel circuits are combined to model for this type of Nyquist plot. The resistor (R_{SEI}) models the resistance of the SEI.

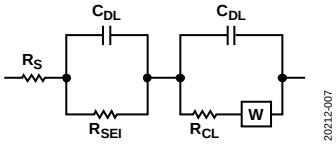

Figure 7. Two Randel Circuits

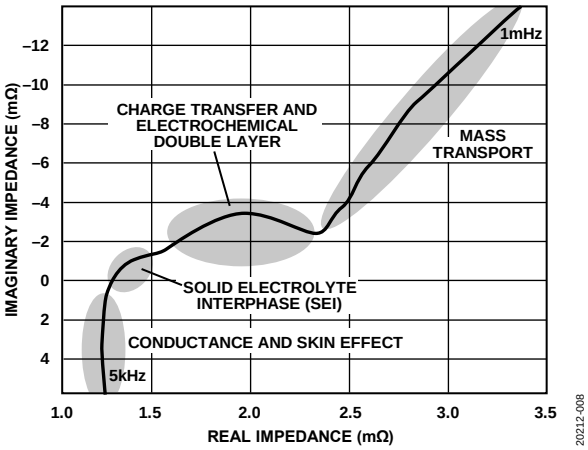

Figure 8. Modified Randel Circuit Model; Nyquist Plot is a Li-Ion Battery with SEI Evident

Downloaded from Arrow.com.

Battery Impedance Solution Using AD5941

The AD5941 impedance and electrochemical front end is the core of the EIS measurement system. The AD5941 consists of a low bandwidth loop, a high bandwidth loop, a high precision analog-to-digital converter (ADC), and a programmable switch matrix.

The low bandwidth loop consists of a low power, dual output, digital-to-analog converter (DAC) that generates V_{ZERO} and V_{BIAS}, and a low power transimpedance amplifier (TIA) to convert input currents to voltage.

The low bandwidth loop is for low bandwidth signals where the frequency of the excitation signal is sub 200 Hz, such as battery impedance measurements.

The high bandwidth loop is for EIS measurements. The high bandwidth loop consists of a high speed DAC designed to generate an ac excitation signal when making impedance measurements. The high bandwidth loop has a high speed TIA designed to convert high bandwidth current signals up to 200 kHz into voltages to be measured by the ADC.

The switch matrix is a series of programmable switches that allows the connection of external pins to the high speed DAC excitation amplifier and to the high speed TIA inverting input. The switch matrix provides an interface to connect an external calibration resistor to the measurement system. The switch matrix also provides flexibility for connecting electrodes.

Batteries typically have impedances in the range of milliohms and require a calibration resistor, R_{CAL}, of similar value. The 50 mΩ R_{CAL} in this circuit is excessively small for the AD5941 to measure directly. Because of the small R_{CAL}, there is an external gain stage using the AD8694 to amplify the receive signal. The AD8694 has ultralow noise performance and low bias and leakage current parameters, which are critical for EIS applications. In addition, sharing the same amplifier across R_{CAL} and the actual battery can help compensate errors coming from cables, ac coupling capacitors, and the amplifier.

Excitation Signal

The AD5941 uses its waveform generator, high speed DAC, (HSDAC) and excitation amplifier to generate sine wave excitation signals. The frequency is programmable from 0.015 Hz up to 200 kHz. The signal is applied to the battery through the CE0 pin and the external Darlington pair transistor configuration, as shown in Figure 9. The current amplifier is required because the maximum current the excitation buffer can source is 3 mA. A typical battery requires up to 50 mA.

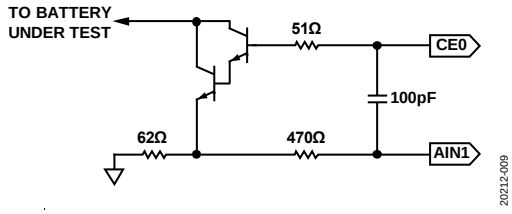

Figure 9. Darlington Transistor Pair

Measuring Voltage

There are two voltage measuring stages. First, the voltage drop across the R_{CAL} is measured. Next, the voltage across the battery is measured. The voltage drop across each component is very small in the range of microvolts (µV). Thus, the measured voltage is sent through an external gain stage. The outputs of the gain amplifiers, AD8694, are sent directly to the ADC on the AD5941 chip at Pin AIN2 and Pin AIN3. Using the discrete Fourier transform (DFT) hardware accelerator, a DFT is performed on the ADC data where the real and imaginary numbers are calculated and stored in the data FIFO for both the R_{CAL} voltage measurement and the battery voltage. The ADG636 multiplexes the battery and R_{CAL} to the AD8694 gain stage.

The ultralow charge injection and small leakage currents of the ADG636 switch are needed to negate any parasitic capacitance on the input pins of the AD5941. Because the AIN2 and AIN3 pins are for both R_{CAL} measurements and battery measurements, the signal path for the impedance measurement is ratiometric.

Calculating Unknown Impedance ($Z_{UNKNOWN}$)

EIS measurements are ratiometric. To measure an unknown impedance ($Z_{UNKNOWN}$), an ac current signal is applied across the known resistor, R_{CAL}, and the response voltage, V_{RCAL}, is measured. Next, the same signal is applied across the unknown impedance, $Z_{UNKNOWN}$, and the response voltage, $V_{ZUNKNOWN}$, is measured. A discrete Fourier transform is performed on the response voltages to determine the real and imaginary values of each measurement. The unknown impedance can be calculated using the following equation:

$$Z_{UNKNOWN} = \frac{V_{Z_{UNKNOWN}}}{V_{R_{CAL}}} \times R_{CAL}$$

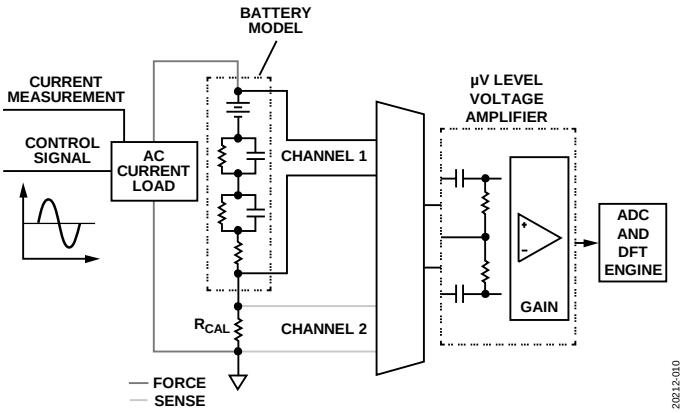

Figure 10. EIS Measurement Diagram

CIRCUIT EVALUATION AND TEST

The following section outlines testing procedures and the gathering of the results for the CN-0510 circuit design. For complete detail on the hardware and software setup, visit the CN-0510 User Guide.

Downloaded from Arrow.com.

Equipment Needed

- PC with a USB port and Windows® 7 or higher.
- EVAL-AD5941BATZ circuit board.
- EVAL-ADICUP3029 development board.
- CN-0510 reference software
- USB Type A to micro USB cable
- Bayonet Neill–Concelman (BNC) connector to grabber/alligator clips
- Battery (device under test, DUT)

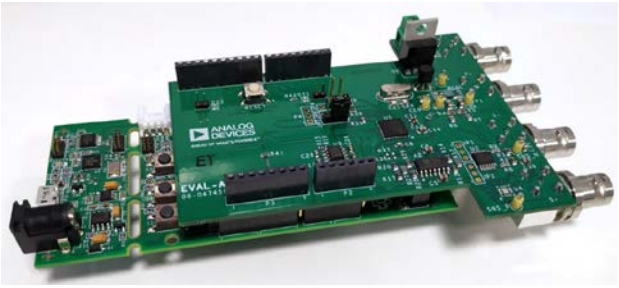

20212-011

Figure 11. Reference Design Board

Getting Started

1. Connect the EVAL-AD5941BATZ to the EVAL-ADICUP3029 via the Arduino headers.
2. Plug in BNC to grabber cables on F+, F–, S+, S–.
3. Power the boards by connecting the micro USB cable into P10 on the EVAL-ADICUP3029 and plug the other end of the USB cable to your computer.
   a. Ensure the boards are powered before connecting the battery to avoid a short circuit.
4. Download the example firmware from GitHub. Instructions to download are provided at the analog.com wiki site.
5. Configure the embedded software for the parameters that are needed for your application.
   a. Use the **AD5940BATStructInit(void)** function. (Example follows.)

```
void AD5940BATStructInit(void)
{
  AppBATCfg_Type *pBATCfg;
  AppBATGetCfg(&pBATCfg);
  pBATCfg->SeqStartAddr = 0;
  pBATCfg->MaxSeqLen = 512;
  pBATCfg->RcalVal = 50.0;
  pBATCfg->ACVoltPP = 600.0f;
  pBATCfg->DCVolt = 1200.0f;
  pBATCfg->DftNum = DFTNUM_8192;
  pBATCfg->NumOfData = 5;
  pBATCfg->BatODR = 4;
  pBATCfg->FifoThresh = 2;
  pBATCfg->ADCSinc3Osr = ADCSINC3OSR_4;
  pBATCfg->ADCSinc2Osr = ADCSINC2OSR_44;
  pBATCfg->DftSrc = DFTSRC_SINC3;

  pBATCfg->SweepCfg.SweepEn = bTRUE;
  pBATCfg->SweepCfg.SweepStart = 1.0f;
  pBATCfg->SweepCfg.SweepStop = 50000.0f;
  pBATCfg->SweepCfg.SweepPoints = 50;
  pBATCfg->SweepCfg.SweepLog = bTRUE;
}
```

20212-012

Figure 12. Firmware Configuration

   a. Build and download the code onto the EVAL-ADICUP3029 target board using the recommended Interactive development environment (IDE). Refer to the AD5940 user guide for details on installation.
6. Connect the battery as shown in Figure 13. Connect F+ and S+ leads to the positive terminal of the battery, and connect S– and F– to the negative terminal of the battery.
7. Press the **3029-RESET** button on the EVAL-ADICUP3029.

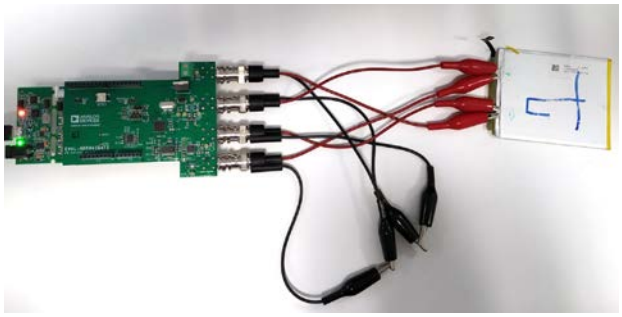

20212-013

Figure 13. Complete EIS Battery System

Battery Test and Results

1. Open a serial terminal using a program such as RealTerm.
2. Configure the baud rate to 230,400.
   a. Select the COM port that the EVAL-ADICUP3029 is connected to.
3. The measurement results are streamed over UART and can be saved to a file for analysis.

Note, the calibration function is executed once at the beginning of the program. If the excitation frequency is slow, it takes some time for at least four periods of the waveform to be captured. For a 0.1 Hz measurement it takes more than 40 seconds to complete.

Downloaded from Arrow.com.

Note, the hardware is optimized for frequencies above 1 Hz. Measurements below this value are noisier due to the 1/f noise of the external amplifiers.

```
Freq: 1000.000000 (real, image) = ( 26.190653 , 5.057587 )mOhm
Freq: 1291.549683 (real, image) = ( 25.477318 , 4.773134 )mOhm
Freq: 1668.100586 (real, image) = ( 24.734867 , 4.544409 )mOhm
Freq: 2154.434570 (real, image) = ( 24.061848 , 4.286195 )mOhm
Freq: 2782.559326 (real, image) = ( 23.475800 , 4.109053 )mOhm
Freq: 3593.813721 (real, image) = ( 22.845942 , 3.901798 )mOhm
Freq: 4641.588867 (real, image) = ( 22.304491 , 3.718076 )mOhm
Freq: 5994.842285 (real, image) = ( 21.822145 , 3.600709 )mOhm
Freq: 7742.636719 (real, image) = ( 21.377426 , 3.571424 )mOhm
Freq: 10000.000000 (real, image) = ( 20.956104 , 3.552273 )mOhm
```

20212-014

Figure 14. Results Displayed in a Terminal Program

Figure 15 shows the Nyquist plot obtained for an example Li-Ion battery measured using the EVAL-AD5941BATZ.

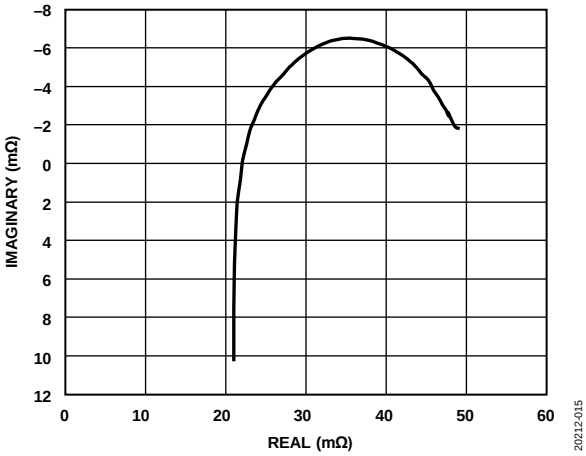

Figure 15. Nyquist Plot (1.11 Hz to 50 kHz Sweep)

For more information on hardware and software setup, visit the CN-0510 User Guide for complete details.

LEARN MORE

A Closer Look at State-Of-Charge and-State Health Estimation Techniques

AD594x User Guide

CN-0510 Design Support Package

Kiel, M., Aachen, RWTH, and Mangler, A., "EIS Simplifies Battery Measurement and Characterization," *EE Times*, March 3, 2012.

DATA SHEETS AND EVALUATION BOARDS

CN-0510 Circuit Evaluation Board (EVAL-AD5941BATZ)

Ultra Low Power Arduino Development Board (EVAL-ADICUP3029)

AD5941 Data Sheet

AD8694 Data Sheet

AD8694 Evaluation Board (EVAL-OPAMP-4)

ADG636 Data Sheet

REVISION HISTORY

4/2020—Rev. 0 to Rev. A

Changes to Devices Connected/Referenced Section.....1

Change to Excitation Signal Section.....4

9/2019—Revision 0: Initial Version

(Continued from first page) Circuits from the Lab reference designs are intended only for use with Analog Devices products and are the intellectual property of Analog Devices or its licensors. While you may use the Circuits from the Lab reference designs in the design of your product, no other license is granted by implication or otherwise under any patents or other intellectual property by application or use of the Circuits from the Lab reference designs. Information furnished by Analog Devices is believed to be accurate and reliable. However, Circuits from the Lab reference designs are supplied "as is" and without warranties of any kind, express, implied, or statutory including, but not limited to, any implied warranty of merchantability, noninfringement or fitness for a particular purpose and no responsibility is assumed by Analog Devices for their use, nor for any infringements of patents or other rights of third parties that may result from their use. Analog Devices reserves the right to change any Circuits from the Lab reference designs at any time without notice but is under no obligation to do so.

©2019–2020 Analog Devices, Inc. All rights reserved. Trademarks and registered trademarks are the property of their respective owners.
CN20212-0-4/20(0)

Downloaded from Arrow.com.