RV College of Engineering®

(Autonomous Institution Affiliated to Visvesvaraya Technological University, Belagavi)
Mysore Road, Bengaluru – 560 059, Karnataka, India
Phone: +91-80-67178000 | Web: www.rvce.edu.in

PROJECT PROPOSAL

Department of Chemistry, RVCE

Development of an Intelligent Portable Electrochemical Analyzer with Adaptive Measurement Capabilities

Submitted By	Varshini C B
USN	1RV23EE056
Department	Electrical & Electronics Engineering
Semester	6th Semester
Project Guide	Dr. Manjunatha C
Guide Department	Department of Chemistry, RVCE
Submitted To	RV College of Engineering, Bengaluru
Project Duration	Six (6) Months
Funding Requested	INR 50,000/-
Date of Submission	April 2025

1. Executive Summary

This proposal presents the design, development, and validation of an Intelligent Portable Electrochemical Analyzer (AnalyteX) — a compact, low-cost, multi-modal instrument capable of performing a comprehensive suite of electrochemical measurements including Cyclic Voltammetry (CV), Differential Pulse Voltammetry (DPV), Electrochemical Impedance Spectroscopy (EIS), Chronoamperometry (CA), and Potentiometry. The proposed system is designed to operate as a standalone, battery-powered device suitable for field deployment and point-of-care diagnostics, targeting three primary application domains: environmental water quality monitoring, biomedical diagnostics, and food safety assessment.

The system is built around a custom-designed PCB integrating a precision potentiostat circuit, a microcontroller-based signal generation and data acquisition subsystem, a dedicated transimpedance amplifier (TIA) stage for picoampere-level current sensing, and a wireless data interface for real-time communication with smartphone and desktop analysis platforms. Screen-Printed Electrodes (SPEs) serve as the primary electrochemical sensing element, enabling disposable, low-cost, and application-specific electrode customisation.

The principal investigator has already committed a self-funded preliminary investment of INR 5,000/- toward SPE procurement and initial prototyping. A grant of INR 50,000/- is requested from RV College of Engineering to cover remaining development costs including PCB fabrication and assembly, component procurement, test infrastructure, and dissemination activities. The proposed system, if commercially developed, would offer a cost reduction of 90–97% compared to existing laboratory-grade electrochemical workstations priced between INR 5,00,000 and INR 20,00,000.

2. Introduction and Background

Electrochemical analysis is one of the most powerful and sensitive analytical methodologies available to researchers, clinicians, environmental scientists, and food technologists. Electrochemical techniques exploit the relationship between electrical potential or current and the concentration or identity of chemical species in a solution, enabling quantitative detection of analytes at nanomolar and even picomolar concentrations. The versatility of electrochemical methods encompasses heavy metal detection (cadmium, lead, arsenic, mercury), glucose and lactate sensing in blood, detection of pesticides and herbicides in food products, antibiotic residue screening, and characterisation of novel electrode materials.

Despite the scientific maturity of these techniques, access to electrochemical instrumentation remains predominantly confined to well-funded research institutions and certified analytical laboratories. Commercial instruments such as the CH instruments' EIS analyser PGSTAT (Metrohm), the CHI series (CH Instruments), the Gamry Reference series, and the BioLogic SP-series are industry-standard platforms offering high accuracy and multi-technique capability. However, they are characterised by costs ranging from INR 5,00,000 to INR 20,00,000, substantial physical dimensions, dependence on mains power, and proprietary software ecosystems — all of

which render them incompatible with field deployment, rural healthcare settings, or low-resource environments

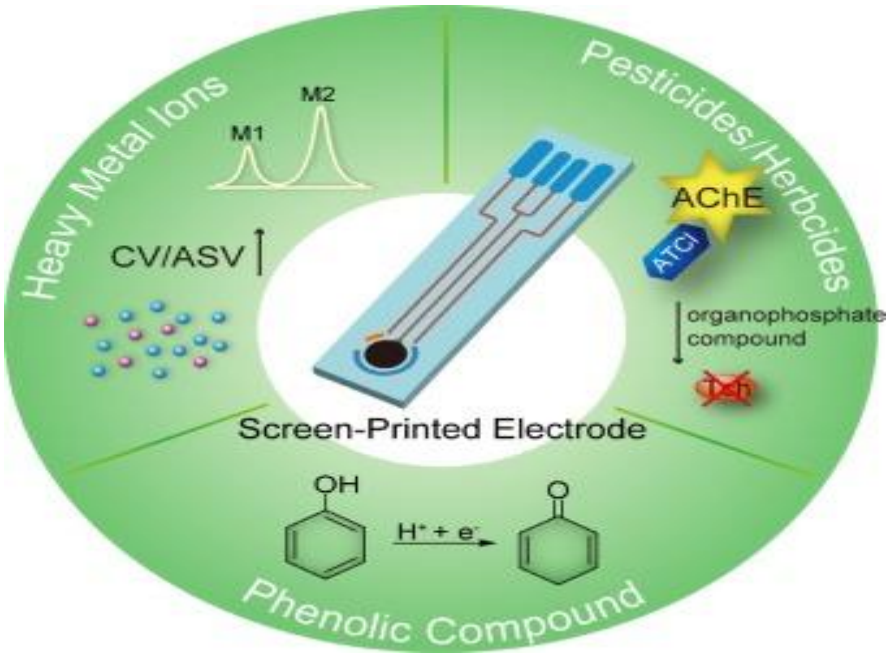

Figure 1: Image showing the overview of a screen-printed electrode

The emergence of miniaturised microcontroller platforms (ARM Cortex-M series, ESP32), high-resolution digital-to-analogue converters (DACs), low-noise operational amplifiers (LMP7721, AD8606), and precision analogue-to-digital converters (ADS1256, MCP3561) has made it technically feasible to construct miniaturised potentiostat systems at a fraction of the cost of laboratory instruments. Open-source projects such as CheapStat and open-source potentiostat designs have demonstrated basic feasibility; however, they lack multi-technique adaptability, robust signal conditioning, EIS capability, and professional PCB integration — all of which this project aims to address.

This project proposes a holistic and professionally engineered solution that bridges the gap between academic open-source potentiostat designs and commercially deployed laboratory-grade instruments. The system will incorporate adaptive firmware intelligence, supporting auto-calibration, technique-specific gain switching, and real-time signal quality assessment — features absent from all current low-cost designs in the literature.

3. Problem Statement

The following critical challenges motivate the development of the proposed system:

- **Cost Barrier:** Laboratory-grade electrochemical workstations cost between INR 5,00,000 and INR 20,00,000, placing them beyond reach of educational institutions, field-deployed environmental agencies, rural diagnostic centres, and early-stage research groups.
- **Portability Deficit:** Existing commercial instruments are bench-top units requiring mains power (230 V AC), dedicated PC workstations, and controlled laboratory environments. They cannot be deployed in field conditions — river banks, agricultural sites, remote clinics, or disaster-relief settings.

- **Single-Technique Limitation:** Available low-cost designs (e.g., CheapStat, EmStat) support only one or two techniques. No affordable device in the Indian market currently supports CV, DPV, EIS, CA, and Potentiometry on a single integrated hardware platform with adaptive measurement intelligence.
- **Data Access and Interoperability:** Proprietary software locks users into vendor ecosystems. The absence of open, wireless data interfaces prevents integration of electrochemical data with cloud databases, electronic health records, or IoT environmental monitoring networks.
- **Absence of Adaptive Intelligence:** No currently available low-cost potentiostat incorporates firmware-level adaptive logic for technique selection guidance, automatic gain calibration, or real-time signal validation — resulting in operator-dependent measurement quality and high rates of erroneous results in the hands of non-expert users.

There is therefore a clear and unmet need for a portable, multi-technique, intelligent electrochemical analyzer that is affordable, battery-operable, field-deployable, and capable of producing laboratory-comparable results in multi-domain analytical applications.

4. Objectives

4.1 Primary Objective

To design, fabricate, and validate an Intelligent Portable Electrochemical Analyzer (AnalyteX) that delivers multi-technique electrochemical measurement capability in a compact, battery-powered form factor at a total bill-of-materials cost below INR 5,000, with measurement accuracy comparable to laboratory-grade commercial potentiostats.

4.2 Specific Technical Objectives

- **O1:** Design a precision potentiostat circuit supporting three-electrode and two-electrode configurations with a control voltage range of ±2V and current sensitivity down to 1 nA.
- **O2:** Implement firmware for five electrochemical techniques: Cyclic Voltammetry (CV), Differential Pulse Voltammetry (DPV), Electrochemical Impedance Spectroscopy (EIS), Chronoamperometry (CA), and Open-Circuit Potentiometry.
- **O3:** Develop an adaptive measurement module with auto-gain selection (sensitivity ranges: 1 nA/V to 1 mA/V), baseline correction, and signal-to-noise ratio monitoring.
- **O4:** Fabricate a 4-layer PCB with dedicated analogue and digital ground planes, shielded signal routing, and on-board EMI mitigation to achieve a noise floor below 5 nA RMS.
- **O5:** Integrate Wi-Fi (ESP32) and Bluetooth Low Energy (BLE) interfaces for wireless data transmission to companion mobile and desktop applications.
- **O6:** Develop a Python-based desktop application and a companion Android interface for real-time waveform visualisation, data export (CSV, JSON), and AI-assisted peak identification.
- **O7:** Characterise and validate the AnalyteX against a calibrated commercial reference instrument using standard electrochemical analytes.
- **O8:** Demonstrate multi-domain applicability: (i) heavy metal detection in water, (ii) glucose sensing in synthetic serum, and (iii) pesticide detection in a food simulant solution.

5. Proposed Solution

The AnalyteX is proposed as a three-subsystem architecture: (i) the Analogue Front-End (AFE) potentiostat circuit, (ii) the Digital Processing and Control Core (DPCC), and (iii) the User Interface and Communication Layer (UICL). These subsystems are integrated onto a single custom 4-layer PCB enclosed in a compact ABS or 3D-printed enclosure with a footprint not exceeding 120 mm x 80 mm x 40 mm and a total system weight of approximately 150 g including battery.

5.1 Analogue Front-End (AFE)

The AFE implements the classical three-electrode potentiostat topology using a dual-path precision op-amp configuration. A control amplifier (CA) drives the counter electrode to maintain the working electrode at the desired potential relative to the reference electrode. A transimpedance amplifier (TIA) converts the faradaic current at the working electrode into a measurable voltage. The TIA uses a switchable feedback resistor bank (8 selectable gain stages spanning 1 kOhm to 1 GOhm) to provide auto-ranging current measurement from 1 nA to 1 mA. Precision instrumentation-grade op-amps (LMP7721 or equivalent) with femtoampere-level input bias currents are selected for the TIA stage to minimise offset errors at low current ranges.

5.2 Digital Processing and Control Core (DPCC)

An ESP32-S3 microcontroller serves as the central processing unit. A 16-bit DAC (MCP4922 or DAC8562) generates the electrochemical excitation waveforms (triangular, staircase, sinusoidal, and step functions) required by each technique. A 24-bit sigma-delta ADC (ADS1256) with a programmable gain amplifier (PGA) digitises the TIA output with the resolution required for sub-nanoampere current measurements. A dedicated real-time clock (RTC) and on-board flash memory module (4 MB QSPI) enable time-stamped offline data logging for autonomous field deployments.

5.3 User Interface and Communication Layer (UICL)

A 2.8-inch colour TFT touchscreen display (ILI9341 controller, 240x320 resolution) provides a direct on-device interface for parameter configuration, real-time waveform display, and result readout. The built-in Wi-Fi and BLE radios of the ESP32-S3 enable wireless synchronisation with a Python desktop client and an Android mobile application. Data are transmitted in JSON format over a lightweight MQTT protocol, enabling direct cloud database integration.

6. Novelty and Innovation

The proposed AnalyteX distinguishes itself from all existing low-cost potentiostat designs and commercial instruments in the following specific respects:

- **Adaptive Gain and Technique Intelligence:** The firmware incorporates a measurement state machine that automatically selects the appropriate current measurement range, adjusts ADC sampling rate, applies baseline subtraction, and evaluates signal quality metrics (SNR, peak resolution) before confirming a valid measurement.
- **Multi-Technique on a Single Low-Cost Platform:** All five major electrochemical techniques (CV, DPV, EIS, CA, Potentiometry) are implemented on a single hardware platform at a total BOM cost below INR 5,000. No existing open-source or commercial device below INR 50,000 currently offers this combination.
- **EIS Capability at Ultra-Low Cost:** EIS is computationally and electronically the most demanding electrochemical technique. The AnalyteX implements a software-defined EIS

module using frequency-swept sinusoidal excitation generated by the DAC and fast Fourier transform (FFT) post-processing on the ESP32-S3, delivering impedance spectra over 0.1 Hz to 100 kHz.

- **AI-Assisted Peak Identification:** The companion desktop application integrates a machine learning inference module (TensorFlow Lite) trained on voltammetric peak signatures for common analytes, offering real-time analyte identification suggestions overlaid on the measured voltammogram.
- **Disposable SPE Integration:** The SPE docking interface is designed for rapid, tool-free electrode exchange, enabling truly disposable one-use measurements for clinical applications. The firmware implements an electrode conditioning protocol to minimise biofouling-related baseline drift.

7. System Architecture

The system is structured as a hierarchical, modular architecture. Each module is independently testable and replaceable, following hardware-software co-design principles to allow incremental validation and risk mitigation.

Module	Component / Technology	Function
Excitation Source	16-bit DAC (MCP4922)	Generates CV/DPV/EIS/CA waveforms with <0.5 mV resolution
Control Amplifier	LMP7721 / TL072	Maintains electrode potential vs. reference; drives counter electrode
Transimpedance Amp	LMP7721 + switched resistor bank	Converts faradaic current to voltage; 8-range auto-gain (1nA-1mA)
ADC	ADS1256 24-bit sigma-delta	High-resolution digitisation of TIA output; 30 kSPS max
MCU / CPU	ESP32-S3 (dual-core, 240 MHz)	Waveform synthesis, state machine control, FFT, BLE/Wi-Fi
Display	2.8" TFT ILI9341 touchscreen	Real-time waveform display, parameter entry, result readout
Storage	4 MB QSPI Flash + microSD slot	Offline data logging with timestamps
Power Management	TP4056 + MT3608 + LiPo 2200 mAh	USB-C charging, 3.3V/5V supply; ~6 hr battery life
Electrode Interface	SPE pogo-pin connector	Tool-free electrode exchange; 3-electrode and 2-electrode modes
Communication	ESP32 Wi-Fi 802.11b/g/n + BLE 5.0	MQTT/JSON data streaming to desktop and mobile clients

8. Circuit Design Overview

8.1 Potentiostat Core

The potentiostat core implements the standard three-electrode topology. The working electrode (WE) is held at virtual ground by the inverting input of the TIA, while the reference electrode (RE) is connected to the non-inverting input of the control amplifier (CA). The CA output drives the counter electrode (CE) to maintain the WE-RE potential difference equal to the DAC-generated excitation

voltage. This configuration achieves a control bandwidth exceeding 100 kHz at unity gain, sufficient for DPV and EIS measurements up to 100 kHz.

8.2 Transimpedance Amplifier and Auto-Gain Stage

The TIA feedback resistor bank consists of eight precision resistors (1 kΩ, 10 kΩ, 100 kΩ, 1 MΩ, 10 MΩ, 100 MΩ, 500 MΩ, 1 GΩ) selected by a low-leakage analogue multiplexer (ADG1608). Current ranges span from 1 mA (1 kΩ feedback) to 1 nA (1 GΩ feedback). The firmware auto-ranging algorithm selects the optimal gain stage based on a preliminary low-level sweep to estimate the expected current magnitude before executing the full measurement protocol.

8.3 EIS Signal Chain

For EIS measurements, a sinusoidal perturbation signal (5 mV RMS amplitude) generated by the DAC is applied at discrete frequencies from 0.1 Hz to 100 kHz. The resulting current response is digitised by the ADC. The ESP32-S3's hardware floating-point unit executes a DFT/FFT-based impedance calculation at each frequency point, computing the real (Z') and imaginary (Z") components of the electrochemical impedance. Nyquist plots and Bode magnitude/phase plots are rendered on-device and transmitted wirelessly to the companion application for equivalent circuit fitting.

8.4 Power Supply Architecture

The system is powered by a 3.7V, 2200 mAh lithium-polymer cell charged via a TP4056 USB-C charging module. A synchronous boost converter (MT3608) provides a regulated 5V rail for the TFT display and USB peripherals. Low-dropout regulators (AMS1117-3.3) supply the analogue and digital 3.3V rails. Separate ground planes for the analogue and digital domains are implemented on the PCB to prevent digital switching noise from coupling into the femtoampere-sensitive TIA measurement path.

9. PCB Design Strategy

The PCB is designed as a 4-layer stack up to achieve the necessary signal integrity and noise performance for picoampere-level electrochemical measurements. The layer assignments are as follows:

Layer	Designation	Description
L1 (Top)	Signal + Components	Analogue components, SMD passives, op-amps, DAC, ADC, connectors
L2	Analogue Ground Plane	Solid copper pour for AGND; star-point connection to DGND at single location
L3	Digital Ground + Power	DGND plane; 3.3V and 5V power distribution; MCU and digital ICs
L4 (Bottom)	Digital Signal + MCU	ESP32-S3 module, display interface, SPI/I2C buses, power management ICs

Critical analogue signal traces (TIA input, reference electrode input) are routed with guard rings (driven shields) to eliminate leakage currents from adjacent high-impedance nodes. All SMD components in the analogue section use 0402 or 0603 case sizes. The PCB is manufactured with ENIG (Electroless Nickel Immersion Gold) surface finish. Design rule checks (DRC) and signal integrity simulations are performed in KiCad EDA prior to Gerber file submission.

10. Work Done So Far

The following groundwork has been completed prior to submission of this proposal, demonstrating the technical readiness and commitment of the investigator:

- **Literature Review and Feasibility Study:** A comprehensive review of existing potentiostat architectures, low-cost electrochemical analyser designs, SPE technologies, and multi-technique measurement methodologies has been completed. Key references include published designs from the groups of Henry S. White, Joseph Wang, and the open-source CheapStat and Rodeostat projects.
- **SPE Procurement and Initial Testing:** Carbon and silver/silver-chloride SPEs have been fabricated using self-funded investment of INR 5,000/-. Basic connectivity testing and bench measurement of electrode impedance have been performed. Cyclic voltammograms of the ferro/ferricyanide redox couple have been recorded on the purchased SPEs using the Chemistry Department's CH instrument EIS analyzer to establish reference baselines.
- Self-funded INR 5,000/- is itemised as: Graphene ink, silver paste, Carbon nanotube, op-amp circuit, copper tape

Figure 2: Fabricated SPE in sample solution during measurement

Figure 3: Variants of the fabricated screen-printed electrode

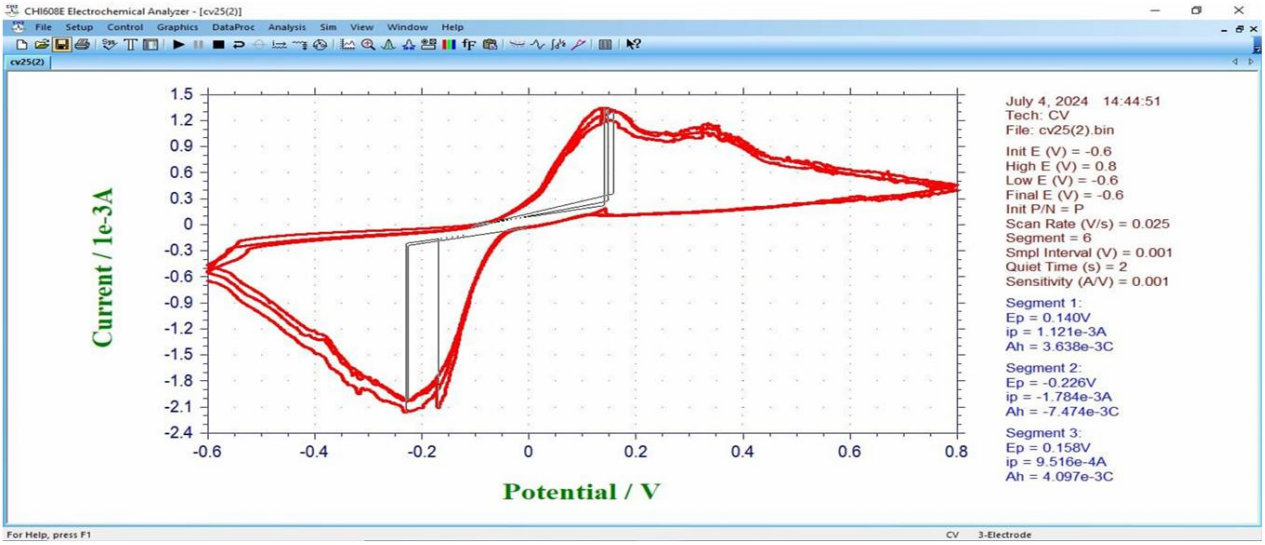

Figure 4: Cyclic voltammetry curve for the fabricated SPE with good sensitivity compared to other SPEs in market

- **PCB Schematic (In Progress):** Schematic capture for the AFE and DPCC subsystems is approximately 70% complete in KiCad 10.0. Power management, communication, and display interface schematics are pending and will be completed upon grant approval.

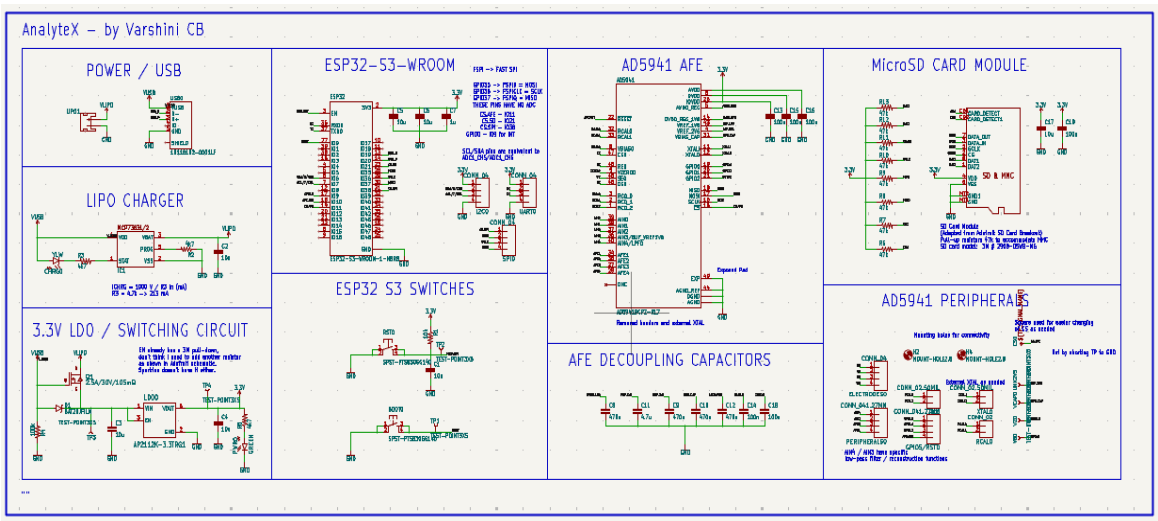

Figure 5: Schematic of proposed AnalyzeX

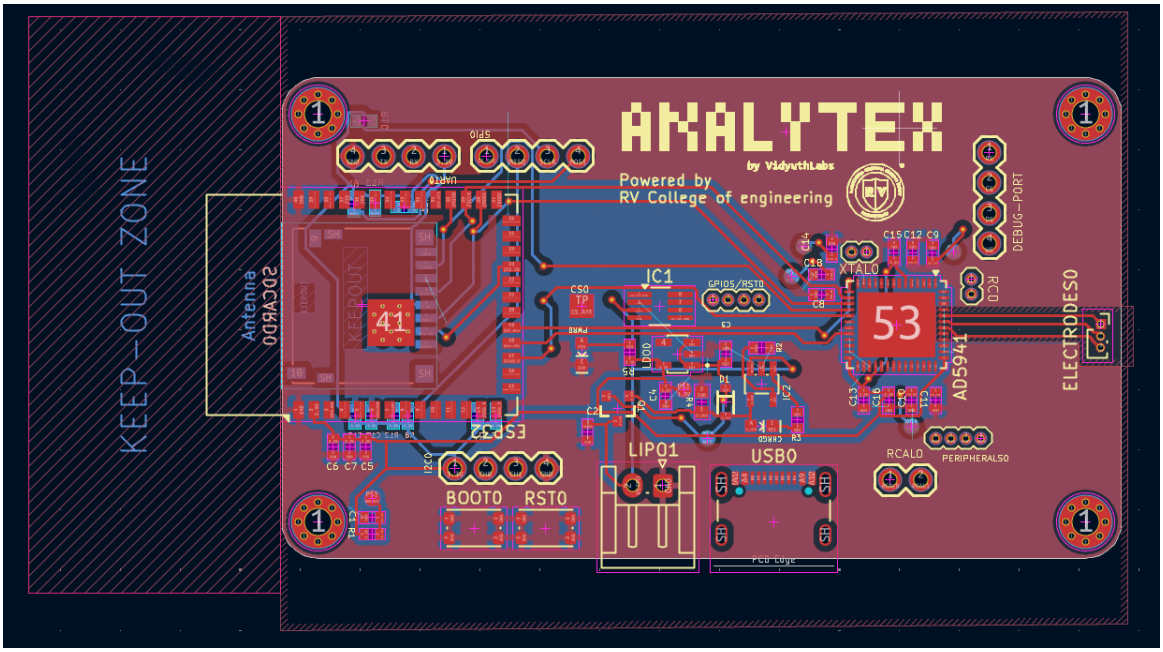

Figure 6: PCB layout of proposed AnalyteX

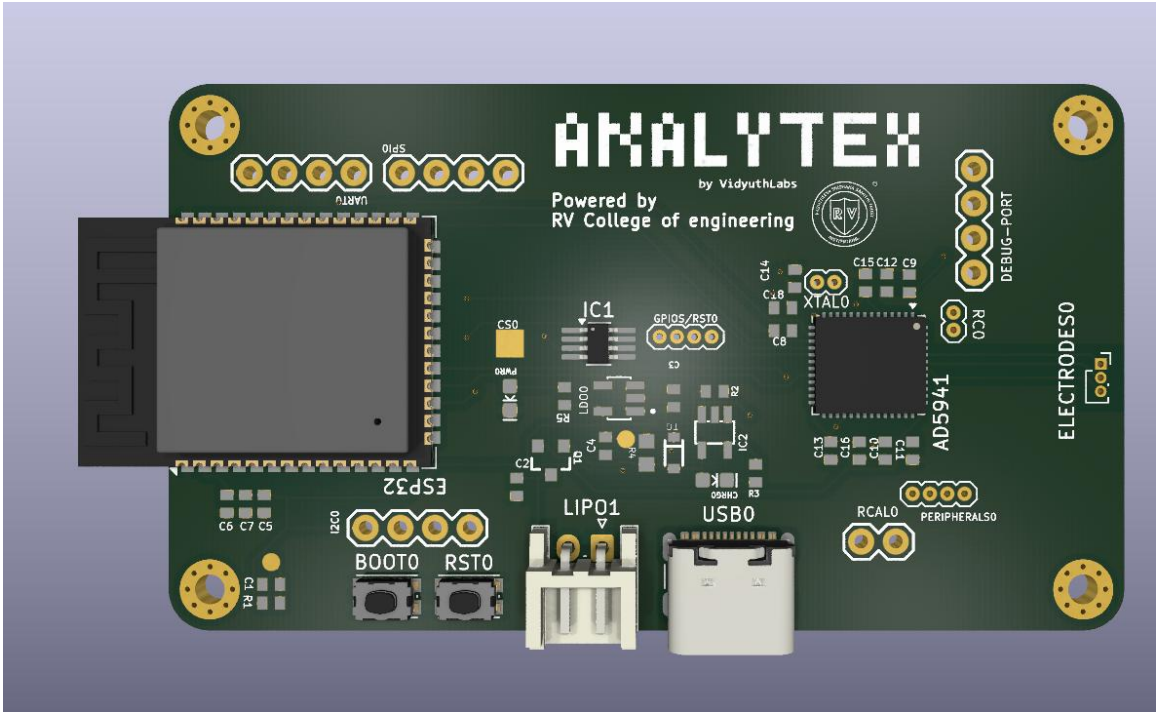

Figure 7: PCB 3D view of proposed AnalyteX

- **Firmware and app Design:** The state machine architecture for the measurement controller, including the technique selector, waveform generator module, ADC driver, and data formatting layer, has been designed in detail and partially implemented in C++ for the ESP32 Arduino framework.

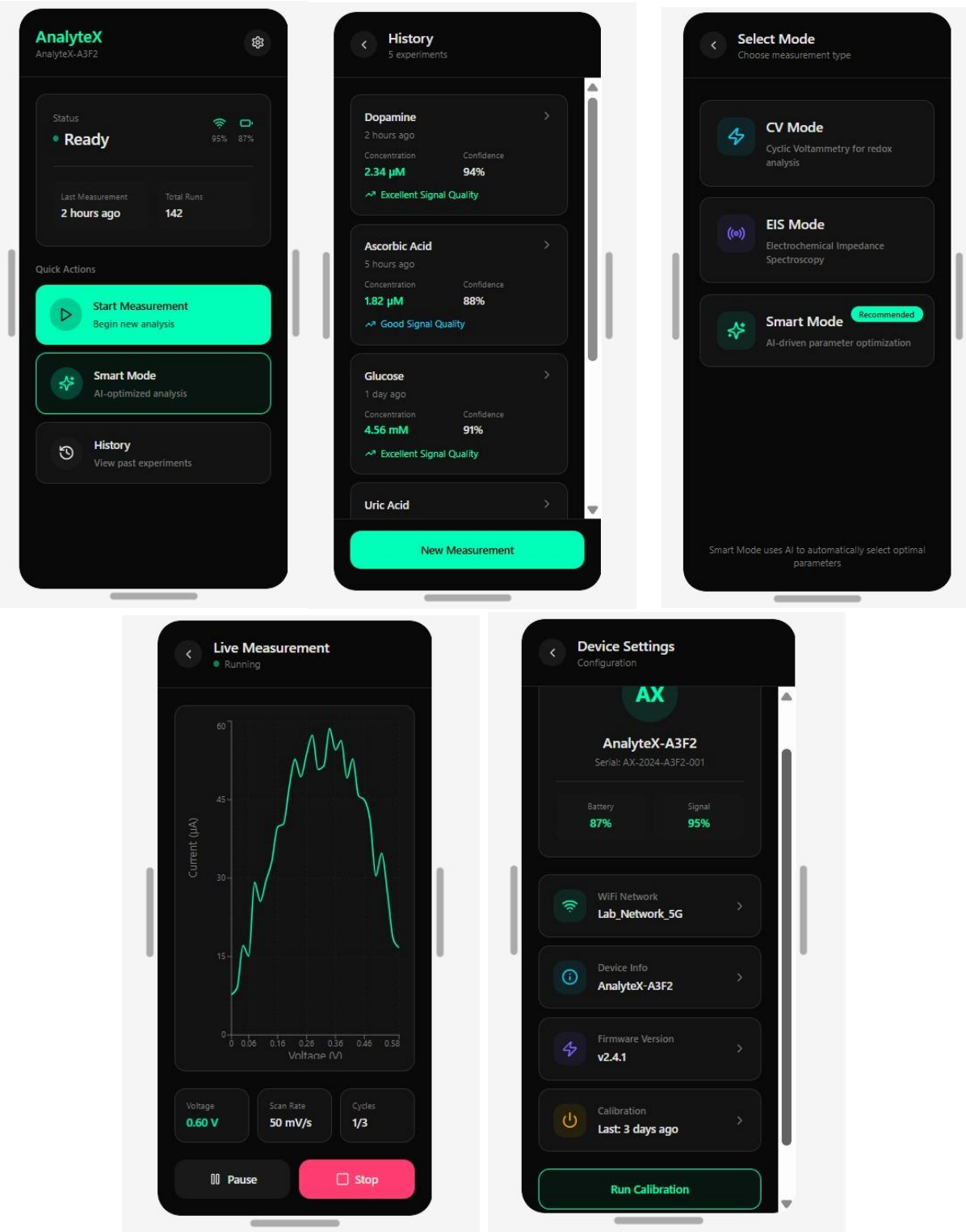

11. Methodology

The project follows a structured hardware-software co-development methodology with five defined phases:

Phase 1 – Schematic Completion and Simulation (Month 1)

Complete KiCad schematic for all subsystems. Perform SPICE simulation (LTSpice XVII) of the AFE potentiostat loop to verify stability, bandwidth, and noise performance at each gain stage. Validate EIS signal chain simulation up to 100 kHz.

Phase 2 – PCB Layout, Fabrication, and Assembly (Month 2)

Complete 4-layer PCB layout in KiCad. Submit Gerbers to PCB manufacturer (JLCPCB or equivalent) for 5 prototype boards. Solder and assemble PCBs. Conduct initial power-on tests and short-circuit checks.

Phase 3 – Hardware Bring-Up and Firmware Development (Month 3)

Systematically bring up each subsystem: power rails, MCU boot, DAC output verification, ADC communication, TFT display, and Wi-Fi/BLE stack. Develop and test firmware for each electrochemical technique module. Implement the auto-gain state machine and baseline correction algorithm.

Phase 4 – Electrochemical Validation and Calibration (Month 4)

Perform all five electrochemical techniques using the AnalyteX on standard analytes: potassium ferricyanide (5 mM, PBS buffer, pH 7.4) for CV and DPV; lead nitrate and cadmium chloride (1-100 ppb in acetate buffer) for stripping voltammetry; glucose (0-20 mM, PBS) for enzymatic amperometry. Compare all results against a commercial reference instrument.

Phase 5 – Application Demonstrations and Dissemination (Months 5-6)

Execute three multi-domain demonstration experiments: (i) on-site water quality testing using heavy metal spiked tap water samples, (ii) glucose monitoring in synthetic serum, and (iii) organophosphate pesticide detection in vegetable wash water. Prepare technical report, conference paper, and final documentation.

12. Validation Plan

All measurements performed by the AnalyteX will be cross-validated against a certified commercial reference instrument (CH instruments' EIS analyser PGSTAT128N or CHI660E available in the Department of Chemistry, RVCE) under identical experimental conditions. The following performance metrics will be evaluated and documented:

Performance Parameter	Target Specification	Measurement Method
Current Resolution	< 1 nA	Known-current source calibration; ferricyanide CV
Potential Accuracy	+/-1 mV vs Ag/AgCl	Calibration with certified reference electrode
Noise Floor (RMS)	< 5 nA RMS	Open-circuit noise measurement at max TIA gain
CV Peak Potential Error	< +/-5 mV	5 mM $K_3Fe(CN)_6$ / PBS; 50 mV/s scan rate
DPV LOD (Pb2+)	< 10 ppb	Lead stripping in acetate buffer; 5 standard concentrations

EIS Frequency Range	0.1 Hz - 100 kHz	Known RC circuit; comparison of Nyquist plots
EIS Phase Accuracy	< +/-2 degrees error	Known RC circuit measurement; error vs reference
Measurement Reproducibility	RSD < 3%	Repeat CV (n=10) on same SPE at identical conditions
Battery Life	> 6 hours continuous	Continuous CV cycling at 100 mV/s from full charge

13. Bill of Materials (BOM)

The following table enumerates all components required for the complete AnalyteX system, excluding items already self-funded. Quantities represent volume required for fabrication and testing of three (3) complete prototype units.

#	Item Description	Specification / Part	Qty	Unit Cost (INR)	Total (INR)
1	Custom 4-Layer PCB (5 pcs)	120x80mm, ENIG, JLCPCB	5	650	3,250
2	ESP32-S3 Module	ESP32-S3-WROOM-1, 8MB Flash	3	450	1,350
3	16-bit DAC	MCP4922-E/P, SPI, DIP-14	6	180	1,080
4	24-bit Sigma-Delta ADC	ADS1256IDBR, SSOP-28	3	480	1,440
5	Precision Op-Amp (TIA/CA)	LMP7721MF/NOPB, SOT-23-5, x10	10	310	3,100
6	General Purpose Op-Amp	TL072CP / LM358, DIP-8, x10	10	35	350
7	Analogue MUX (gain select)	ADG1608BRUZ, TSSOP-16, x3	3	320	960
8	Precision Resistor Set (TIA bank)	0.1% 0603 SMD: 1k-1G, 50pc kit	3	850	2,550
9	LDO Regulator 3.3V	AMS1117-3.3, SOT-223, x10	10	18	180
10	Boost Converter 5V	MT3608, SOT-23-6, x5	5	55	275
11	Li-Po Battery Charger IC	TP4056 with protection, x5	5	60	300
12	Li-Po Battery 3.7V 2200mAh	JST connector, x3	3	380	1,140
13	TFT LCD Display 2.8"	ILI9341, 240x320, SPI, touch	3	650	1,950
14	MicroSD Card Module	SPI interface, 3.3V logic, x3	3	90	270
15	Pogo-Pin Connector (SPE)	3-pin, spring-loaded, gold, x10	10	65	650
16	Screen-Printed Electrodes	Carbon/Ag-AgCl, DRP-110, 50pc	50	95	4,750
17	USB-C Connector (PCB mount)	USB Type-C, 16-pin SMD, x10	10	45	450
18	SMD Passive Kit (R, C, L)	0402/0603 assortment, 3000-pc	2	750	1,500

19	Ceramic Decoupling Capacitors	100nF/10uF, 0402/0805, x100	100	4	400
20	3D-Printed Enclosure (ABS)	Custom 120x80x40mm, x3	3	550	1,650
21	PCB Stencil (solder paste)	Stainless, 0.12mm, x1	1	800	800
22	Solder Paste (SAC305)	Syringe 10g, x2	2	450	900
23	Miscellaneous consumables	Wire, headers, flux, etc.	-	-	1,500
	TOTAL DIRECT COMPONENT COST				**28,595**

14. Budget Justification

Budget Head	Description	Amount (INR)
A. PCB & Fabrication	4-layer PCB manufacture (5 units), solder paste, stencil, assembly consumables	5,450
B. Electronic Components	ICs, passive components, connectors, modules (3 prototype units, per BOM)	17,195
C. Electrodes & Reagents	SPEs (50 pcs), analytical grade reagents, PBS, CdCl2, Pb(NO3)2, glucose, lab glassware	7,200
D. Enclosure & Mechanical	3D-printed ABS enclosures (3 units), mounting hardware, labels	1,650
E. Software & Tools	KiCad EDA (open-source), MATLAB student licence if required, cloud services	800
F. Dissemination	IEEE conference registration (1 paper), poster printing, documentation, binding	3,200
G. Contingency (5%)	Component failures, PCB re-spins, unforeseen consumables	2,505
TOTAL REQUESTED	**INR 50,000 requested (Self-funded INR 5,000 deducted from gross requirement of INR 55,000)**	**50,000**

The requested INR 50,000/- represents the minimum viable budget to fabricate and validate three complete prototype units, execute all five technique validations, and prepare a peer-reviewed publication. No salary or stipend is claimed. All equipment purchased under this grant shall remain property of RV College of Engineering upon project completion.

15. Project Timeline (6 Months)

Activity	M1	M2	M3	M4	M5	M6
1. Literature review completion & schematic finalisation	•					
2. SPICE simulation & design verification	•	•				
3. PCB layout, DRC, and Gerber submission		•				
4. PCB fabrication, assembly, and power-on test			•			
5. Firmware: CV, DPV, CA technique modules			•	•		

6. Firmware: EIS module and FFT implementation				•		
7. Firmware: auto-gain state machine				•		
8. Companion software (Python desktop + Android app)				•	•	
9. Electrochemical validation vs. reference instrument					•	
10. Multi-domain application demonstrations (3 use cases)					•	
11. Performance characterisation & data analysis					•	•
12. Report writing, paper submission, documentation						•
13. Mid-term progress report to RVCE			•			
14. Final report and prototype demonstration to RVCE						•

Note: Bullet (•) denotes active execution period. M = Month.

16. Market Analysis

16.1 Target User Segments

- **Academic Research Groups:** Chemistry, biochemistry, materials science, and environmental science departments in Indian universities requiring multi-technique electrochemical capability for student projects and faculty research.
- **Environmental Monitoring Agencies:** State pollution control boards, municipal water utilities, and NGOs engaged in field assessment of water bodies for heavy metal contamination.
- **Point-of-Care Diagnostics:** Rural health centres, community clinics, and diagnostic service providers in Tier-2 and Tier-3 cities requiring affordable glucose, lactate, and biomarker monitoring capability.
- **Food Safety Testing Labs:** FSSAI-accredited laboratories, food processing companies, and agricultural export organisations requiring rapid screening for pesticide residues and adulterants.
- **Industrial R&D:** Battery manufacturers, coating companies, and corrosion testing laboratories requiring portable EIS and corrosion measurement capability for in-field material characterisation.

16.2 Competitive Landscape and Cost Comparison

Product / System	Manufacturer	Techniques	Cost (INR)	Portable?
CH instruments' EIS analyzer PGSTAT128N	Metrohm (CH)	CV, DPV, EIS, CA, full suite	12,00,000-18,00,000	No
CHI660E Workstation	CH Instruments (USA)	CV, DPV, EIS, CA, full suite	8,00,000-12,00,000	No
Gamry Reference 600+	Gamry (USA)	CV, EIS, CA, full suite	10,00,000-16,00,000	No
BioLogic SP-150e	BioLogic (France)	CV, EIS, CA, full suite	9,00,000-14,00,000	No
EmStat4S Blue	PalmSens (Netherlands)	CV, DPV, EIS (limited)	1,80,000-3,20,000	Yes
PalmSens4	PalmSens (Netherlands)	CV, DPV, EIS, CA	2,50,000-4,00,000	Yes (partial)

CheapStat (DIY)	Open-source	CV, DPV, SWV only	~5,000	Yes
AnalyteX (Proposed)	**RVCE (This Project)**	**CV, DPV, EIS, CA, Potentiometry**	**~5,000 (BOM)**	**Yes (battery)**

The AnalyteX uniquely occupies the intersection of full multi-technique capability, true field portability, and sub-INR 10,000 bill-of-materials cost — a market position currently unoccupied by any commercial or open-source product. At a retail price point of INR 15,000-25,000 (inclusive of assembly, testing, and enclosure), the AnalyteX would offer a 90-99% cost reduction compared to commercial instruments.

17. Product Potential and Commercialisation

- **Technology Transfer to Startup:** The hardware design, firmware, and companion software can form the intellectual property basis for a student startup under RVCE's innovation and entrepreneurship programme or under DPIIT Startup India registration. The Indian portable electrochemical analyzer market is estimated to exceed USD 15 million annually, growing at approximately 12% CAGR.
- **Licensing to Instrument Manufacturers:** The AnalyteX design can be licensed to Indian scientific instrument manufacturers (e.g., Remi, Equiptronics, Toshniwal) interested in adding a low-cost portable electrochemical product line.
- **FSSAI and CPCB Empanelment:** With appropriate calibration certification, the AnalyteX can be submitted for approval as a testing instrument under FSSAI Method protocols and CPCB Water Quality Monitoring Guidelines, opening access to a large institutional procurement market.
- **Open-Source Publication:** All schematics, firmware, and companion software will be published under open-source licences (CERN-OHL for hardware, MIT for firmware) to enable community adoption and academic replication, establishing RVCE as a reference institution for portable electrochemical instrumentation development in India.

18. Expected Outcomes

- **O1:** A fully functional, validated AnalyteX prototype supporting five electrochemical techniques in a portable, battery-powered form factor with a BOM cost below INR 5,000.
- **O2:** Measured current resolution below 1 nA, potential accuracy within +/-1 mV, and measurement reproducibility with RSD below 3%, validated against a commercial reference instrument.
- **O3:** Demonstrated detection of lead ions (Pb2+) in water samples at concentrations below 10 ppb using DPV with the SPE electrode, meeting WHO drinking water quality guidelines.
- **O4:** Demonstrated glucose detection in synthetic serum over the clinically relevant range of 2-20 mM with linearity R2 > 0.998.
- **O5:** EIS characterisation of a standard Randles cell within 2 degree phase error and 5% impedance magnitude error across 0.1 Hz - 100 kHz.
- **O6:** At least one peer-reviewed publication in an IEEE Transactions, Elsevier Sensors and Actuators, or Talanta journal detailing the hardware design, validation methodology, and application results.

- **O7:** One conference paper submitted to an IEEE CONECCT, IETE, or equivalent national/international conference.
- **O8:** Complete open-source hardware and software release on GitHub with documentation sufficient for independent replication.
- **O9:** Potential foundation for a student startup or technology licensing agreement under RVCE's incubation programme.

19. Future Scope

- **AI-Integrated Analyte Identification:** Integration of a trained convolutional neural network (CNN) or LSTM model for automatic identification and quantification of analytes from voltammetric fingerprints, enabling untrained operators to reliably use the device in field conditions.
- **Multiplexed Electrode Array:** Extension of the current single-channel design to an 8- or 16-channel multiplexed measurement system for high-throughput screening of clinical or environmental sample arrays.
- **Cloud-Connected Environmental Sensor Network:** Deployment of multiple AnalyteX units as fixed nodes in a river or groundwater monitoring network, transmitting real-time heavy metal and nutrient data to a cloud platform for watershed health dashboarding.
- **Microfluidic Integration:** Integration with a paper microfluidic or PDMS-based flow cell to enable automated sample preparation and dilution, enabling truly autonomous monitoring capability.
- **Medical Device Certification:** Pursuing CDSCO registration for the glucose and lactate measurement application, enabling use in regulated point-of-care diagnostic settings.
- **Advanced EIS Circuit Fitting:** Implementation of a Levenberg-Marquardt non-linear least squares algorithm in the companion software for automatic equivalent circuit model fitting, enabling battery state-of-health estimation and corrosion monitoring applications.

20. Conclusion

This proposal presents a technically rigorous, well-scoped, and practically impactful project to develop the Intelligent Portable Electrochemical Analyzer — a platform that addresses a genuine and urgent gap in accessible analytical instrumentation in India. The proposed system combines precision analogue circuit design, adaptive firmware intelligence, and multi-domain application capability into a portable, battery-powered instrument at a bill-of-materials cost two to four orders of magnitude lower than commercial equivalents.

The preliminary work completed — SPE procurement, breadboard prototyping, firmware architecture, and reference baseline measurements — demonstrates the technical preparedness of the investigator and the soundness of the proposed approach. The requested funding of INR 50,000/- is modest, focused, and fully justified by the detailed bill of materials and budget breakdown provided.

The outcomes of this project will directly benefit the research community of RVCE and contribute to national priorities of affordable healthcare, food safety, and environmental quality. The publication, open-source release, and commercialisation pathways described ensure that the impact of this

investment extends far beyond the six-month project window. The investigator respectfully requests the support of RV College of Engineering in bringing this instrument from concept to validated prototype.

Varshini C B
1RV23EE056, 6th Semester
Dept. of EEE, RVCE

Dr. Manjunatha C
Project Guide
Dept. of Chemistry, RVCE

Head of Department
Dept. of Chemistry
RVCE, Bengaluru

Signature: _____

Signature: _____

Signature: _____

Date: _____

Date: _____

Date: _____