Week 07 - support

on dictionaries

Python Dictionary

← Python Tuples

Python Numbers →

In Python, a *dictionary* is an unordered collection of items, with each item consisting of a `key: value` pair (separated by a colon).

Create a Dictionary

You can create a dictionary by enclosing comma separated `key: value` pairs within curly braces `{}`. Like this:

```
d = {"Key1": "Value1", "Key2": "Value2"}
```

Here's an example of creating a dictionary, then printing it out, along with its type:

```
# Create the dictionary
planet_size = {"Earth": 40075, "Saturn": 378675, "Jupiter": 439264}
# Print the dictionary
print(planet_size)
# Print the type
print(type(planet_size))
```

RESULT

```
{'Earth': 40075, 'Saturn': 378675, 'Jupiter': 439264}
<class 'dict'>
```

But that's not the only way to create a dictionary. There's also a `dict()` function for creating dictionaries. And you can also use syntax variations within that function. Here are some examples:

http://python-ds.com/python-dictionary

```
planet_size = dict({"Earth": 40075, "Saturn": 378675, "Jupiter": 439264})
planet_size = dict([("Earth", 40075), ("Saturn", 378675), ("Jupiter", 439264)])
```

dictionaries

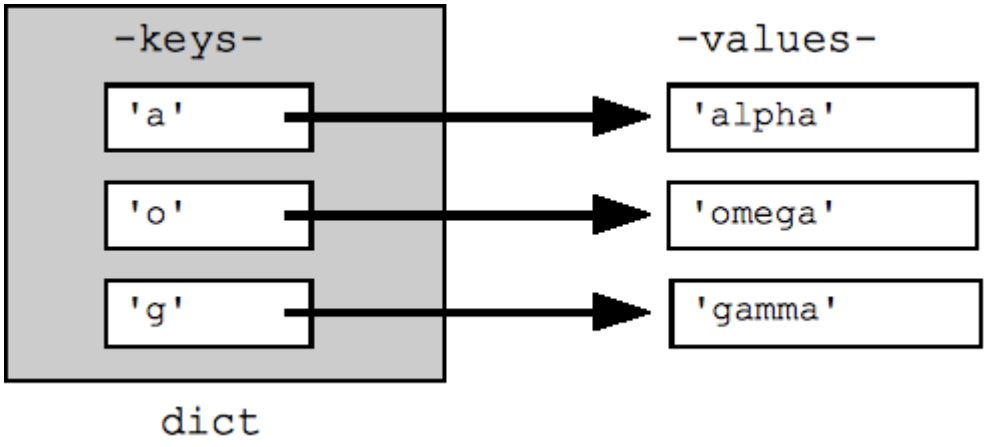


```
websterDict = {'person': 'a human being',
               'marathon': 'a running race that is about 26 miles',
               'resist': 'to remain strong against the force',
               'run': 'to move with haste; act quickly'}
```

- dictionary key
- dictionary value

dictionaries: mixing…

```
# Creating a Nested Dictionary
# as shown in the below image
Dict = {1: 'Geeks', 2: 'For',
        3:{'A' : 'Welcome', 'B' : 'To', 'C' : 'Geeks'}}

print(Dict)
```

Output:

```
{1: 'Geeks', 2: 'For', 3: {'A': 'Welcome', 'B': 'To', 'C': 'Geeks'}}
```

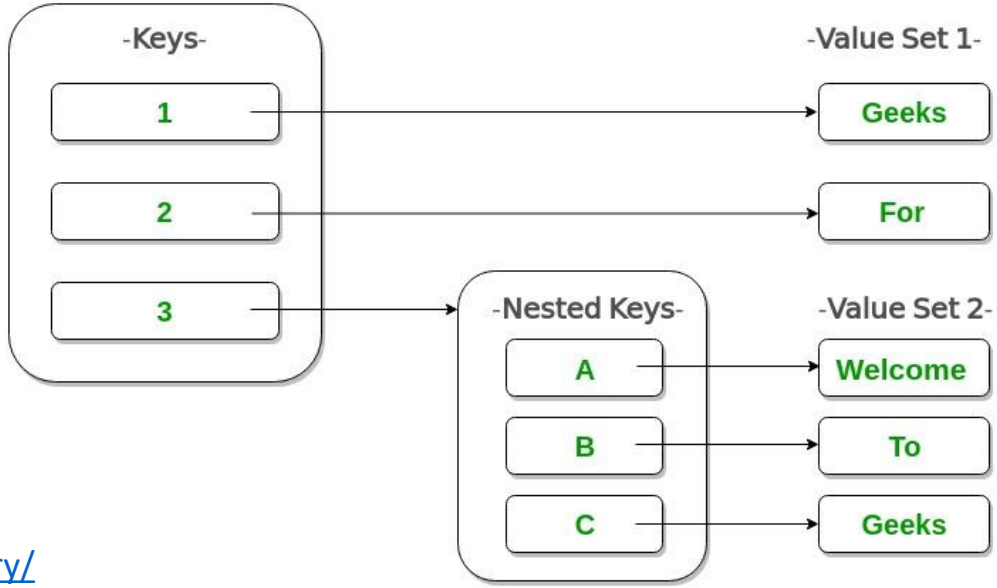

https://www.geeksforgeeks.org/python-dictionary/

dictionaries: mixing…

```
# Creating a Nested Dictionary
# as shown in the below image
Dict = {1: 'Geeks', 2: 'For',
        3:{'A' : 'Welcome', 'B' : 'To', 'C' : 'Geeks'}}

print(Dict)
```

Output:

```
{1: 'Geeks', 2: 'For', 3: {'A': 'Welcome', 'B': 'To', 'C': 'Geeks'}}
```

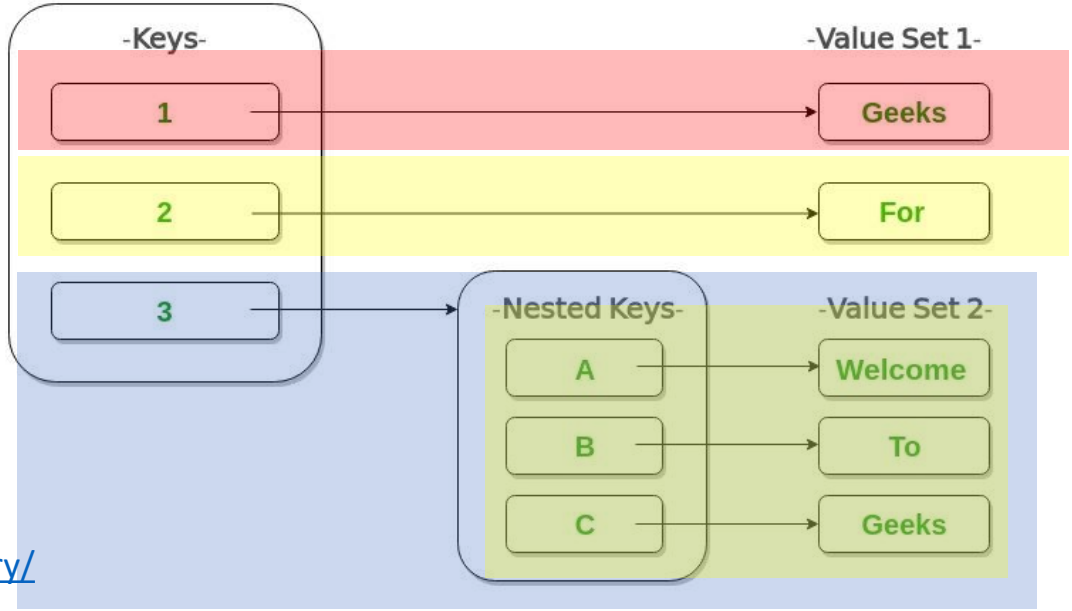

https://www.geeksforgeeks.org/python-dictionary/

dictionaries: mixing…

```
dictionary_list = {'name': 'Ariel', 'hobbies': ['painting' , 'singing' , 'cooking'
print ("dictionary_list['name']:", dictionary_list['name'])
print ("dictionary_list['hobbies']:", dictionary_list['name'])
//use index to access specific value
print ("dictionary_list['hobbies'][0]:", dictionary_list['name'][0])
print ("dictionary_list['hobbies'][1]:", dictionary_list['name'][1])
print ("dictionary_list['hobbies'][2]:", dictionary_list['name'][2])
```

```
dictionary_list['name']: Ariel
dictionary_list['hobbies']: ['painting, 'singing', 'cooking']
dictionary_list['hobbies'][0]: painting
dictionary_list['hobbies'][1]: singing
dictionary_list['hobbies'][2]: cooking
```

https://www.gangboard.com/blog/python-dictionary/

dictionaries: mixing…

```
dictionary_list = {'name': 'Ariel', 'hobbies': ['painting' , 'singing' , 'cooking'
print ("dictionary_list['name']:", dictionary_list['name'])
print ("dictionary_list['hobbies']:", dictionary_list['name'])
//use index to access specific value
print ("dictionary_list['hobbies'][0]:", dictionary_list['name'][0])
print ("dictionary_list['hobbies'][1]:", dictionary_list['name'][1])
print ("dictionary_list['hobbies'][2]:", dictionary_list['name'][2])
```

```
dictionary_list['name']: Ariel
dictionary_list['hobbies']: ['painting, 'singing', 'cooking']
dictionary_list['hobbies'][0]: painting
dictionary_list['hobbies'][1]: singing
dictionary_list['hobbies'][2]: cooking
```

https://www.gangboard.com/blog/python-dictionary/

dictionaries_: keys, values & items

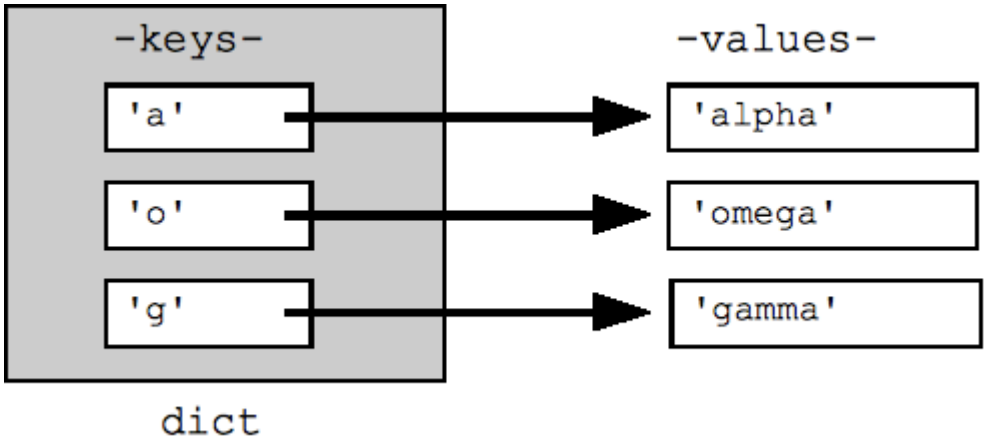


```
d.keys() → [ ‘a’, ‘o’, ‘g’ ]
d.values() →  [ ‘alpha’, ‘omega’, ‘gamma’ ]
d.items() →  [ ‘a’:’alpha” , ‘o’:’omega’, ‘g’:’gamma’ ]
d.count() →   3
‘a’ in d  → True
‘b’ in d → False
```

Dictionaries: listing, ….

Using the key (implicit)

```
>>> for key in a_dict:
...     print(key, '->', a_dict[key])
...
color -> blue
fruit -> apple
pet -> dog
```

Using the key (explicit)

```
>>> for key in a_dict.keys():
...     print(key, '->', a_dict[key])
...
color -> blue
fruit -> apple
pet -> dog
```

Using the items → list of key,values

```
>>> for item in a_dict.items():
...     print(item)
...
('color', 'blue')
('fruit', 'apple')
('pet', 'dog')
```

```
>>> for key, value in a_dict.items():
...     print(key, '->', value)
...
color -> blue
fruit -> apple
pet -> dog
```

Using the values (explicit)

```
>>> for value in a_dict.values():
...     print(value)
...
blue
apple
dog
```

dictionaries: in?

```
>>> a_dict = {'color': 'blue', 'fruit': 'apple', 'pet': 'dog'}
>>> 'pet' in a_dict.keys()
True
>>> 'apple' in a_dict.values()
True
>>> 'onion' in a_dict.values()
False
```

https://realpython.com/iterate-through-dictionary-python/

dictionaries: delete & update

```
>>> prices = {'apple': 0.40, 'orange': 0.35, 'banana': 0.25}
>>> for k, v in prices.items():
...     prices[k] = round(v * 0.9, 2)  # Apply a 10% discount
...
>>> prices
{'apple': 0.36, 'orange': 0.32, 'banana': 0.23}
```

```
>>> prices = {'apple': 0.40, 'orange': 0.35, 'banana': 0.25}
>>> for key in list(prices.keys()):  # Use a list instead of a view
...     if key == 'orange':
...         del prices[key]  # Delete a key from prices
...
>>> prices
{'apple': 0.4, 'banana': 0.25}
```

https://realpython.com/iterate-through-dictionary-python/

Dictionaries misc

```
webstersDict
```

```
{'marathon': '26 mile race',
 'person': 'a human being',
 'run': 'to move with haste; act quickly',
 'shoe': 'an external covering for the human foot'}
```

```
webstersDict.update({'ran': 'past tense of run',
                     'shoes': 'plural of shoe'})
```

```
webstersDict
```

```
{'marathon': '26 mile race',
 'person': 'a human being',
 'ran': 'past tense of run',
 'run': 'to move with haste; act quickly',
 'shoe': 'an external covering for the human foot',
 'shoes': 'plural of shoe'}
```

```
storyCount
```

```
{'Michael': 12, 'is': 100, 'runs': 5, 'the': 90}
```

```
storyCount.pop('the')
```

```
90
```

```
storyCount
```

```
{'Michael': 12, 'is': 100, 'runs': 5}
```

```
print(storyCount.get('Michael'))
```

```
12
```

https://medium.com/@GalarnykMichael/python-basics-10-dictionaries-and-dictionary-methods-4e9efa70f5b9

Dictionaries misc

```
student_dictionary  = {'name' : 'Lisa', 'age' : 6, 'grade' : '1' }
student_dictionary.pop('grade')
print (student_dictionary)
```

Output:

```
{'name': 'Lisa', 'age': 6 }
```

```
dict = {1: "one", 2: "three"}
dict_update = {2: "two"}
#value of key 2 is updated
dict.update(dict_update)
print(dict)
```

Output:

```
{1: 'one', 2: 'two'}
```

```
dog = { "breed": "labrador", "color": "dusty white", "sex": "female" }
x = dog.values()
print(x)
```

Output:

```
dict_values(['labrador', 'dusty white', 'female'])
```

https://www.gangboard.com/blog/python-dictionary/

Dictionary functions

METHODS	DESCRIPTION
copy()	They copy() method returns a shallow copy of the dictionary.
clear()	The clear() method removes all items from the dictionary.
pop()	Removes and returns an element from a dictionary having the given key.
popitem()	Removes the arbitrary key-value pair from the dictionary and returns it as tuple.
get()	It is a conventional method to access a value for a key.
dictionary_name.values()	returns a list of all the values available in a given dictionary.
str()	Produces a printable string representation of a dictionary.
update()	Adds dictionary dict2's key-values pairs to dict
setdefault()	Set dict[key]=default if key is not already in dict
keys()	Returns list of dictionary dict's keys
items()	Returns a list of dict's (key, value) tuple pairs
has_key()	Returns true if key in dictionary dict, false otherwise
fromkeys()	Create a new dictionary with keys from seq and values set to value.
type()	Returns the type of the passed variable.
cmp()	Compares elements of both dict.

https://www.geeksforgeeks.org/python-dictionary/

Function with Description
cmp(dict1, dict2) Compares elements of both dict.
len(dict) Gives the total length of the dictionary. This would be equal to the number of items in the dictionary.
str(dict) Produces a printable string representation of a dictionary
type(variable) Returns the type of the passed variable. If passed variable is dictionary, then it would return a dictionary type.

Methods with Description
dict.clear() Removes all elements of dictionary *dict*
dict.copy() Returns a shallow copy of dictionary *dict*
dict.fromkeys() Create a new dictionary with keys from seq and values *set* to *value*.
dict.get(key, default=None) For *key* key, returns value or default if key not in dictionary
dict.has_key(key) Returns *true* if key in dictionary *dict*, *false* otherwise
dict.items() Returns a list of *dict*'s (key, value) tuple pairs
dict.keys() Returns list of dictionary dict's keys
dict.setdefault(key, default=None) Similar to get(), but will set dict[key]=default if *key* is not already in dict
dict.update(dict2) Adds dictionary *dict2*'s key-values pairs to *dict*
dict.values() Returns list of dictionary *dict*'s values

https://www.tutorialspoint.com/python/python_dictionary.htm

Dictionary: when key does not exist

- Getting a non existent key provokes error
  - KeyError

```
country_dict = {'India' : 'IN', 'Australia' : 'AU', 'Brazil' : 'BR'}
print(country_dict['Australia'])
print(country_dict['Canada']) # This will return error
```

- Solution
  - Handle error
  - **Default value (the second parameter)**

https://www.tutorialspoint.com/handling-missing-keys-in-python-dictionaries
https://www.geeksforgeeks.org/handling-missing-keys-python-dictionaries/

Dictionary: default value

```
print(storyCount.get('chicken'))
```

```
None
```

```
print(storyCount['chicken'])
```

```
---------------------------------------------------------------------------
KeyError                                  Traceback (most recent call last)
<ipython-input-20-27ef036ded95> in <module>()
----> 1 print(storyCount['chicken'])

KeyError: 'chicken'
```

```
print(storyCount.get('chicken', 0))
```

```
0
```

```
storyCount
```

```
{'Michael': 12, 'is': 100, 'runs': 5, 'the': 90}
```

```
storyCount.pop('the')
```

```
90
```

```
storyCount
```

```
{'Michael': 12, 'is': 100, 'runs': 5}
```

```
print(storyCount.get('Michael'))
```

```
12
```

```
country_dict = {'India' : 'IN', 'Australia' : 'AU', 'Brazil' : 'BR'}
print(country_dict.get('Australia', 'Not Found'))
print(country_dict.get('Canada', 'Not Found'))
```

https://www.tutorialspoint.com/handling-missing-keys-in-python-dictionaries
https://www.geeksforgeeks.org/handling-missing-keys-python-dictionaries/

Dictionaries curiosities

```
sequence_keys = {'A', 'B', 'AB', 'O' }
value = 'blood type'
bloodtype = dict.fromkeys(sequence_keys, value)
print (bloodtype)
```

```
{'A': 'blood type', 'B': 'blood type', 'AB': 'blood type', 'O': 'blood type}
```

Similar to

```
bloodtype = {}
Value = ‘blood type’
for k in sequence_keys:
  bloodtype[k]=value
```

https://www.gangboard.com/blog/python-dictionary/

The END