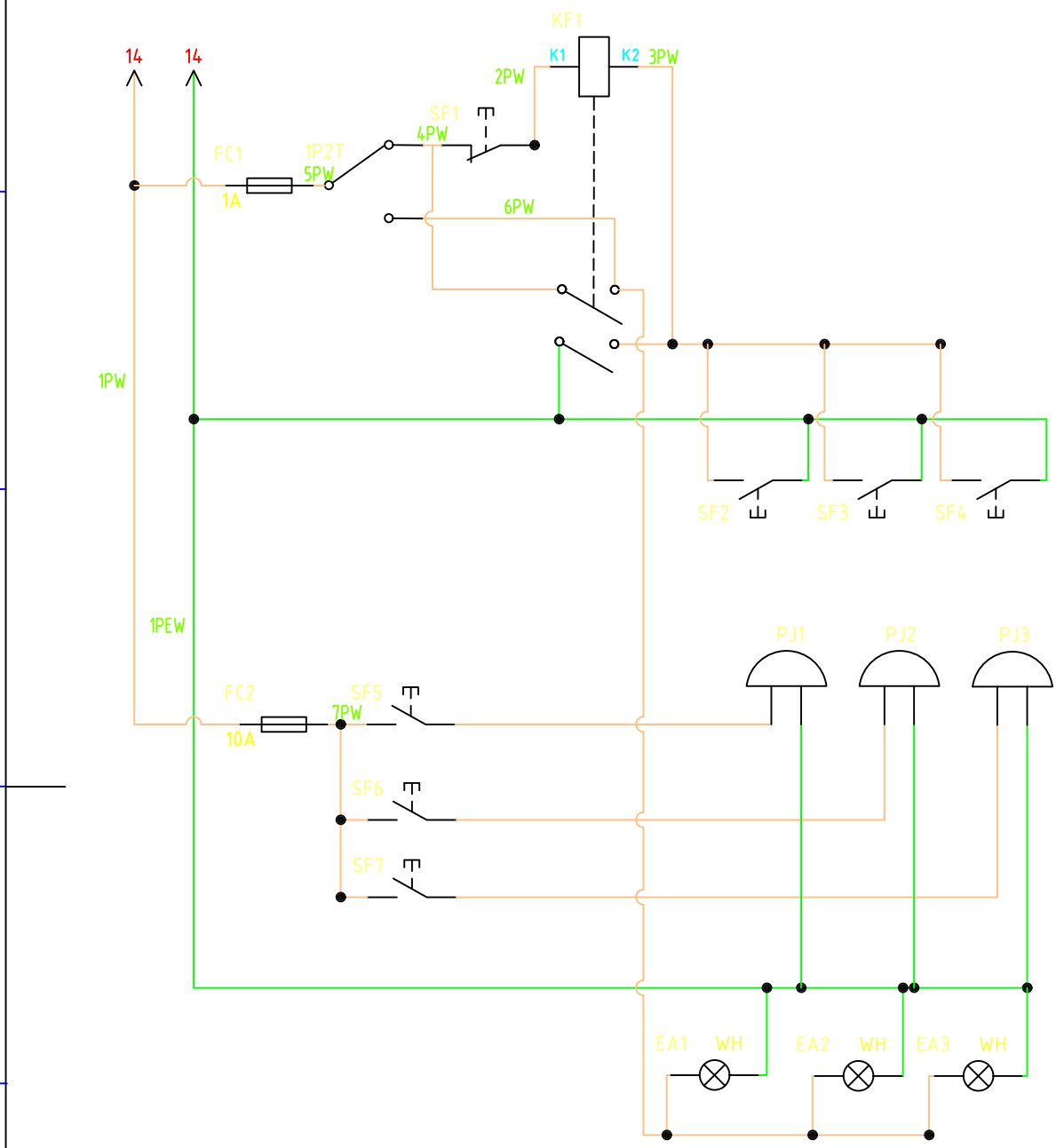

							SCALE xxx5
					DATE	NAME	xxx1
				Edit	00.00.00	xxx6	xxx2
				Chec.	00.00.00	xxx7	
							xxx3
							SHEETS xxx4
No:	Revision	Date	By				FILENAME xxx10