Engineering Science and Technology, an International Journal 23 (2020) 189–195

HOSTED BY

ELSEVIER

Contents lists available at ScienceDirect

Engineering Science and Technology, an International Journal

journal homepage: www.elsevier.com/locate/jestch

Full Length Article

Automatic identification for field butterflies by convolutional neural networks

Ayad Saad Almryad *, Hakan Kutucu

Department of Computer Engineering, Karabuk University, Karabuk, Turkey

ARTICLE INFO

Article history:
Received 25 November 2019
Revised 6 January 2020
Accepted 23 January 2020
Available online 1 February 2020

Keywords:
Butterfly
Deep learning
Classification
ResNet
Transfer learning

ABSTRACT

In today's competitive conditions, producing fast, inexpensive and reliable solutions are an objective for engineers. Development of artificial intelligence and the introduction of this technology to almost all areas have created a need to minimize the human factor by using artificial intelligence in the field of image processing, as well as to make a profit in terms of time and labor. In this paper, we propose an automated butterfly species identification model using deep neural networks. We collected 44,659 images of 104 different butterfly species taken with different positions of butterflies, the shooting angle, butterfly distance, occlusion and background complexity in the field in Turkey. Since many species have a few image samples we constructed a field-based dataset of 17,769 butterflies with 10 species. Convolutional Neural Networks (CNNs) were used for the identification of butterfly species. Comparison and evaluation of the experimental results obtained using three different network structures are conducted. Experimental results on 10 common butterfly species showed that our method successfully identified various butterfly species.

© 2020 Karabuk University. Publishing services by Elsevier B.V. This is an open access article under the CC BY-NC-ND license (http://creativecommons.org/licenses/by-nc-nd/4.0/).

1. Introduction

Butterflies are insects in the order Lepidoptera. The number of butterfly species in the world varies from 15,000 to 21,000 according to a recent estimate in [1]. Due to various species, high similarity and the characteristics of the distinction of butterflies is not evident, the identification and classification of butterflies have the problems of low accuracy and slow recognition. Furthermore, the number of taxonomists and trained technicians has decreased dramatically.

The discrimination between butterfly species requires expertise and time, which is not always available, but after the development of software that identifies butterfly species by extracting features from images, the need for experts will reduce. There are two main problems in the existing butterfly species identification research based on computer vision techniques. First, collecting the butterfly dataset is difficult, identifying is time-consuming work for entomologists, and the number of butterflies included in the butterfly dataset is not comprehensive. Second, the butterfly pictures used for training are all pattern pictures with obvious morphological features, lacking the ecological pictures of butterflies in the nature. Furthermore, the differences between two pictures are obvious that makes the combination of research and production difficult and the recognition accuracy is low [2]. Therefore, it is of great importance to make research on the automatic identification of butterflies and improve its accuracy and efficiency. The development of tools for automating the identification of butterfly species has an important contribution to the literature.

Kaya et al. [3] proposed two different local binary patterns (LPB) descriptors for detecting special textures in images. The first one is based on the relations between the sequential neighbors of a center pixel with a specific distance and the other one is relies on determining the neighbors in the same orientation through the central pixel parameter. They tested their descriptors to identify butterfly species on lab-based images of 140 butterflies collected in Van city of Turkey. The highest accuracy they obtained for classifying butterflies by the artificial neural network is 95.71%. Kaya and Kaycı [4] developed a model for butterfly identification based on color and texture features by the artificial neural network using the gray level co-occurrence matrix with different angles and distances. The accuracy of their method reached 92.85%.

Wen and Guyer [5] developed a model which combines local and global features for insect classification via five well-known classifiers that are K nearest neighbor classifier (KNNC), normal densities based linear classifier (NDLC), minimum least-square

* Corresponding author.
E-mail addresses: yd_saad2010@yahoo.com (A.S. Almryad), hakankutucu@karabuk.edu.tr (H. Kutucu).

Peer review under responsibility of Karabuk University.

https://doi.org/10.1016/j.jestch.2020.01.006
2215-0986/© 2020 Karabuk University. Publishing services by Elsevier B.V.
This is an open access article under the CC BY-NC-ND license (http://creativecommons.org/licenses/by-nc-nd/4.0/).

linear classifier (MLSLC), nearest mean classifier (NMC) and decision tree (DT). Their experimental results tested on images collected from actual field trapping for training yielded the classification rate of 86.6%.

Xie et al. [6] improved a learning model for the classification of insect images using advanced multiple-task sparse representation and multiple-kernel learning techniques. They tested the proposed model on 24 common pest species of field crops and compared it with some recent methods. Feng et al. [7] improved an insect species identification and retrieval system based on wing attributes of moth images. Their retrieval system is based on CBIR architecture which is not about having a final answer but just providing a match list to the user [8]. The final decision can be made by an expert.

Yao et al. [9] designed a model to automate rice pest identification using 156 features of pests. The authors tested the proposed model on a few species of Lepidoptera rice pests with middle size using the support vector machine classifier. Another study for pest recognition was done by Faithpraise et al. using k-means clustering algorithm and correspondence filters [10]. Leow et al. [11] developed an automated identification system of copepod specimens by extracting morphological features and using ANN. They used seven copepod features of 240 sample images and estimated an overall accuracy of 93.13%. Zhu and Zhang [12] proposed a method to classify lepidopteran insect images by integrated region matching and dual-tree complex wavelet transform. They tested their method on a database consisting of 100 lepidopteran insects of 18 families and estimated the recognition accuracy of 84.47%.

Mayo and Watson [13] showed that data mining techniques could be effective for the recognition of species. They used WEKA which is a data mining tool with different classifiers such as Naïve Bayes, instance-based learning, random forests, decision trees, and support vector machines. WEKA was able to achieve an accuracy of 85% using support vector machines to classify live moths by species. Another work for identification of live moths was conducted by Watson et al. [14] who proposed an automated identification tool named DAISY.

Silva et al. [15] aimed to investigate the best combination of feature selection techniques and classifiers to identify honeybee subspecies. They found the best pair as the combination of Naïve Bayes classifier and the Correlation-Based feature selector in their experimental results among seven combinations of feature selectors and classifiers.

Wang et al. [16] designed an identification system of insect images at the order level. They extracted seven features from insect images. However, the authors manually removed some attached to insects such as pins. Their method has been tested on 225 specimen images from nine orders and sub-orders using artificial neural network with an accuracy of 93%.

Abeysinghe et al. [17] introduced a fully automated framework to identify snake species using convolutional Siamese networks. Although the current dataset of snakes is small, they achieved satisfactory results.

In this paper, we create a dataset of butterfly pictures taken from the nature. After applying some preprocesses to the images of butterflies we used deep convolutional neural networks based on VGG (VGG16 and VGG19) and ResNet (ResNet-50) architectures.

The article is organized as follows: The field butterfly image dataset is discussed and a technical approach based on the different convolutional neural network architectures is introduced in Section 2. Section 3 shows the experimental results and their discussion and finally, Section 4 concludes the paper and presents further works.

2. Materials and methods

2.1. Dataset

In this study, we gathered 44,659 images in different 104 classes from the website of Butterflies Monitoring & Photography Society of Turkey [18]. We developed a C# application to download all butterfly images, each image was saved to a directory named its genus. When images were downloaded from the website, we labeled the species which were approved by professionals. The dataset was divided into 104 different classes using these information labels. Since many classes have a few image samples, we restricted it to include 10 classes with the most sample size as shown in Table 1. The new dataset has 17,769 images. The number of classes has been reduced to 10 in order to increase the classification accuracy and to remove the classes with fewer samples. Since all images on the website are of different resolutions, they were resized to 224 × 224 pixels. Sample images for each class are given in Fig. 1. Since the input images were captured from wide field-of-view cameras, they have some characteristics such as occlusion and background complexity. We deleted the images if they contain more than one butterfly even if they are of the same species. We also deleted the images with butterfly larvae and caterpillars.

2.2. Deep neural networks

Deep learning, especially in recent years, has become key research for applications based on artificial intelligence [19]. Due to the serious achievements in the field of computer vision [20], natural language processing [21] and speech recognition [22], the rate of use increases day by day.

Deep learning algorithms based on Artificial Neural Networks, inspired by a simplification of neurons in a human brain, come to the forefront with its success in the learning phase. Deep learning algorithms can solve the problem of feature extraction and selection by automatically removing the distinguishing features from the given input data. Much more labeled data is needed for deep learning compared to classic neural networks. The rapid increase of achievable data today has made the role of deep learning very important in problem-solving. These remarks have attracted the attention of many researchers in the field of computer science.

Convolutional Neural Networks (CNNs), regarded as the fundamental architecture of deep learning, is a Multi-Layer Perceptron (MLP) forward-feed neural network inspired by the vision of animals [23]. CNNs are deep learning models which are mainly used to image classification, similarity detection and object recognition [24,25].

CNNs has ability to identify Face [26], Person [27], Sign [28], etc. CNNs, which focus mostly on image classification, are now used in

Table 1
Name and the number of images per butterfly's genus in the dataset.

Genus	Images
Polyommatus	5559
Lycaena	2472
Melitaea	2235
Pieris	1530
Aricia	1080
Pyrgus	1036
Plebejus	1003
Nymphalis	989
Melanargia	943
Coenonympha	922

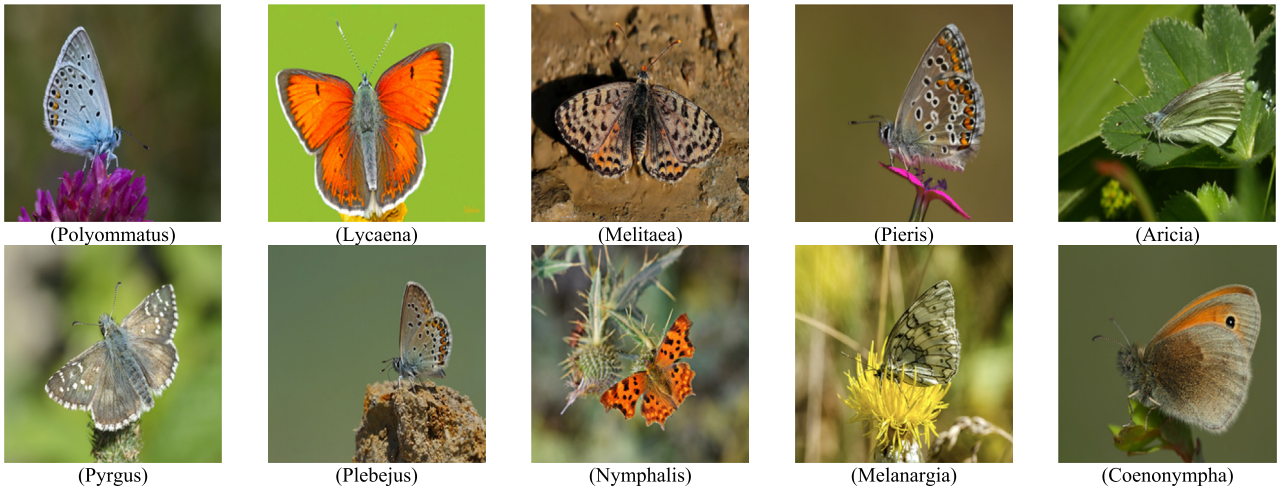

Fig. 1. Sample images on the dataset.

almost every area requiring classification The general CNN structure consists of several consecutive convolutions and pooling layers, one or more fully connected layers and in the end the output layer (the softmax layer) for classification. A sample CNN structure is given in Fig. 2.

In the input layer, images are taken to model as input data. The structure of this layer is quite important in terms of the success and resource cost of the designed model. If it is necessary, some preprocessing algorithms such as scaling and noise reduction are applied to the input data. If an input has low-resolution images, then it can cause a decrease in depth and performance of the network. In the convolution layer, known as a transformation layer, convolution process is applied to the input data through filters as feature selection. Filters can be preset as well as randomly generated. The result of the convolution process creates a feature map of the data. The filter size is set as 1×1, 3×3, 5×5 and sometimes 7×7. Fig. 3 shows an application process of the sobel filter to sample image data. This process continues to overall images for all filters. Finally, features are obtained at the end of this process. If the input images have 3 channels (RGB), convolution process is applied to each channel.

The padding operation determines which process is to be performed for the pixel information to be added to the corners of the input matrix. The stride process shows how many steps the window will be shifted in each step. After convolution process, the dimension of the matrix that is obtained by applying *fxf* sized filter to the image of *nxn* size is calculated by the following equation.

$$n_x, n_y = \left[\frac{n + 2p - f}{s} + 1\right] \tag{1}$$

where p is padding size and s is the stride number. The pooling layer is used to reduce the size of the input matrix for the next convolution layer. By pooling, *wxh*-sized windows are progressed by a certain step to create a new image by taking the maximum value (max-pooling) or the average value (average-pooling) of the window. By keeping the channel number constant, the width and height can be reduced. Max pooling and average pooling are common two approaches in the pooling layer. An example of max pooling and average pooling is shown in Fig. 4 for an input matrix of size 4×4 and a pooling filter of size 2×2.

The fully connected layer comes after successive convolution and pooling layers. In the fully connected layer, the data from the pooling layer is reduced to a single dimension. Since each neuron is connected, it is called fully connected. In this layer, the classification process is carried out and activation functions such as ReLU and Sigmoid are used. In the output layer, using the Softmax function, it produces the probability-based loss value using the score values generated by the model. Fig. 5 shows the output layer for a two-class problem.

The dropout layer used in cases where the model performs over-fitting (memorization) makes the process of eliminating some connections in the model that make over-learning. Therefore, the network is prevented from memorizing by deleting some neurons in the fully connected layers at a random rate (usually 0.5).

The classic CNN architecture consists of two basic parts. The first part is the convolution and pooling layers. Features are extracted on the input images in this part [29]. In the first part, feature extraction stages are applied in the general sense, not problem-specific. In the second part, the fully connected layer and the output layer perform problem-specific classification.

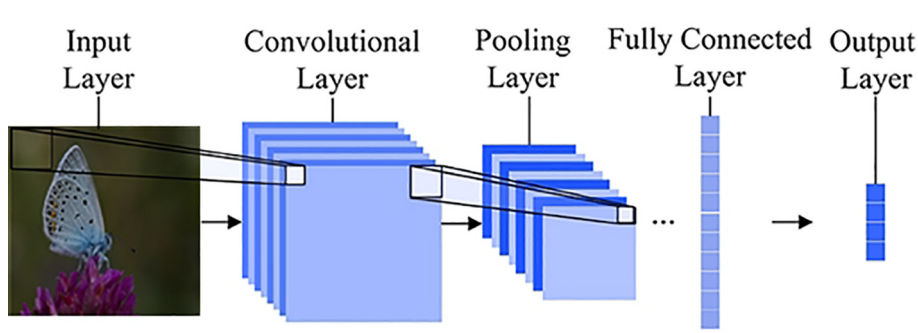

Fig. 2. A convolutional neural network.

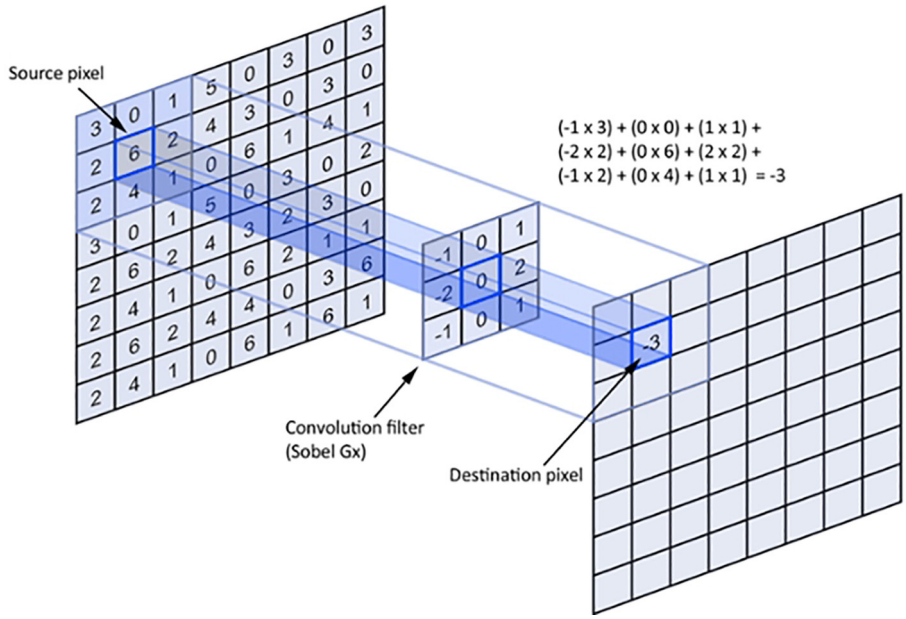

Fig. 3. A convolution process with a filter size of 3 × 3.

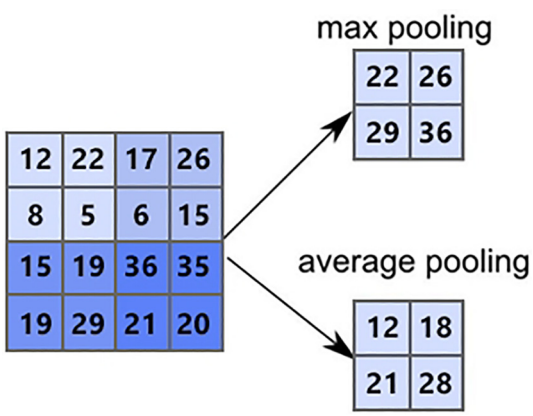

Fig. 4. Max pooling and average pooling with a 2 × 2 filter.

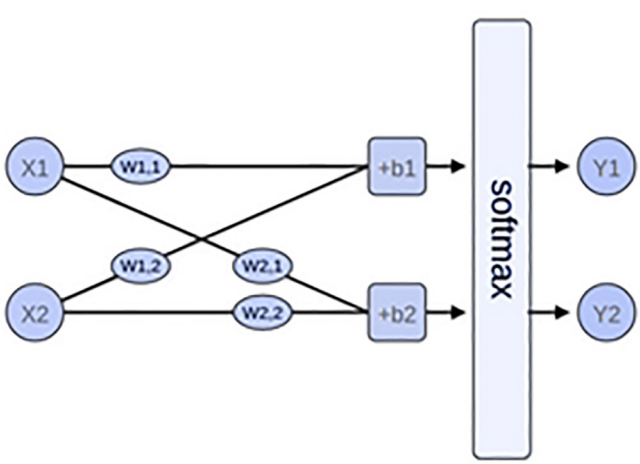

Fig. 5. Softmax function.

2.3. Transfer learning

Transfer learning is rapid implementation of the learning process in a similar or a different field [30]. In this way, the learning process realized on a large amount of data can be applied to different sets of images in smaller sizes. Thanks to its improvement in memory usage and performance, it is especially popular in the field of computer vision. The model, which is trained with a huge amount of training data, is completed by updating the weights in the classification section instead of training from the beginning. In the literature, many researches have been suggested with this approach which are commonly called pre-trained models. The most popular models named VGG [31], Inception [20], MobileNet [32] and ResNet [33] are applied to ImageNet [34] which has more than 1.2 million images and have achieved high accuracy [35]. Training algorithms such as Adagrad, Adadelta, Adam, Adamax, Stochastic Gradient Descent are used in general for training on CNN. These algorithms differ in terms of the speed and success.

2.3.1. VGGNet

Simonyan and Zisserman developed a new convolutional neural network architecture, the so-called VGG in [31]. The architecture of the VGG network is shown in Fig. 6. They released two best-performing VGG models with 16 and 19 wt layers. 16 and 19 stand for the number of weight layers in the VGG networks. VGG16 with 13 convolutions and 3 fully connected layers has achieved %8.8 top-5 test error on ImageNet dataset. Besides, VGG19 has 16 convolution and reached up to the %9.0 top 5-test error rate. In the VGG network, the input is a fixed-size 224 × 224 RGB image.

2.3.2. ResNet

ResNet has a different structure than the traditional consecutive network architectures such as VGGNet, AlexNet, because it has a micro-architectural module structure that differs from other architectures. It may be preferable to switch to the lower layer by ignoring the change between some layers. This situation is allowed in the architecture of ResNet and the success rate of the network is increased by eliminating the problem of memorizing the network.

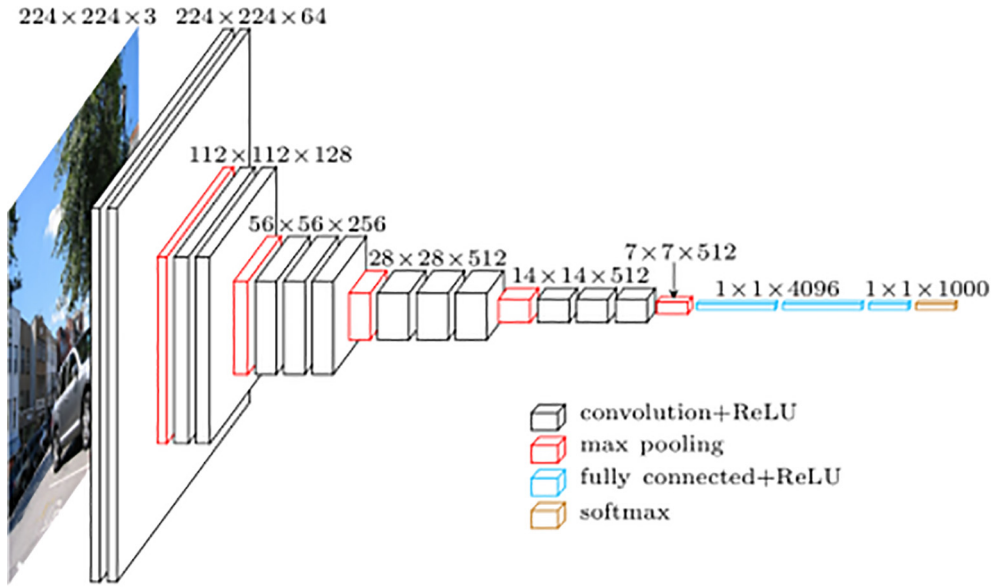

Fig. 6. An illustration of the VGG architecture.

ResNet architecture has a network of 177 layers. In addition to this layered structure, there is information about how inter-layer connections will occur. This model has trained for images of size 224 × 224 × 3. Fig. 7 shows an example for the connection used in the ResNet architecture.

3. Experiment and discussion

In this study, various deep learning models are used to classify the images in the dataset. Convolution Neural Networks based on learning transfer methods were used (VGG16, VGG19, ResNet50). The most widely used models in the literature have been trained on the ImageNet dataset and have achieved high success. In this study, fine-tuned transfer learning methods are used for the classification of the butterfly images.

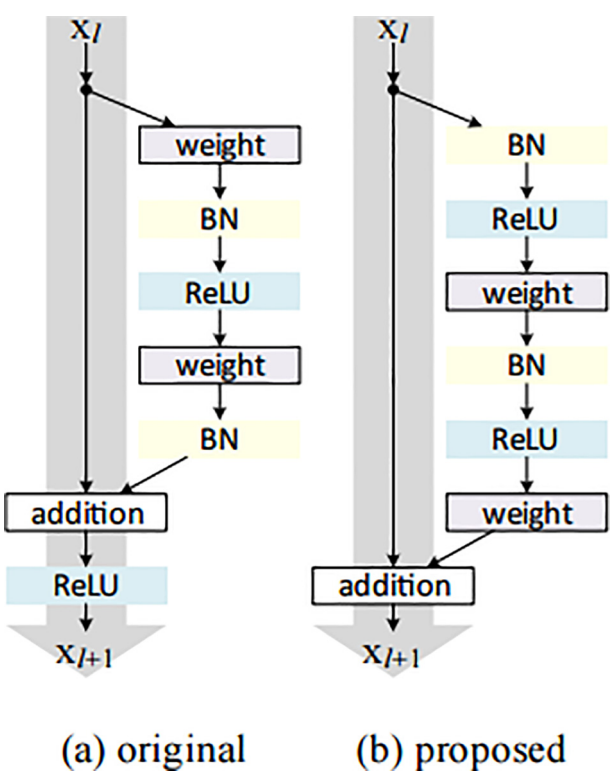

Fig. 7. ResNet architecture.

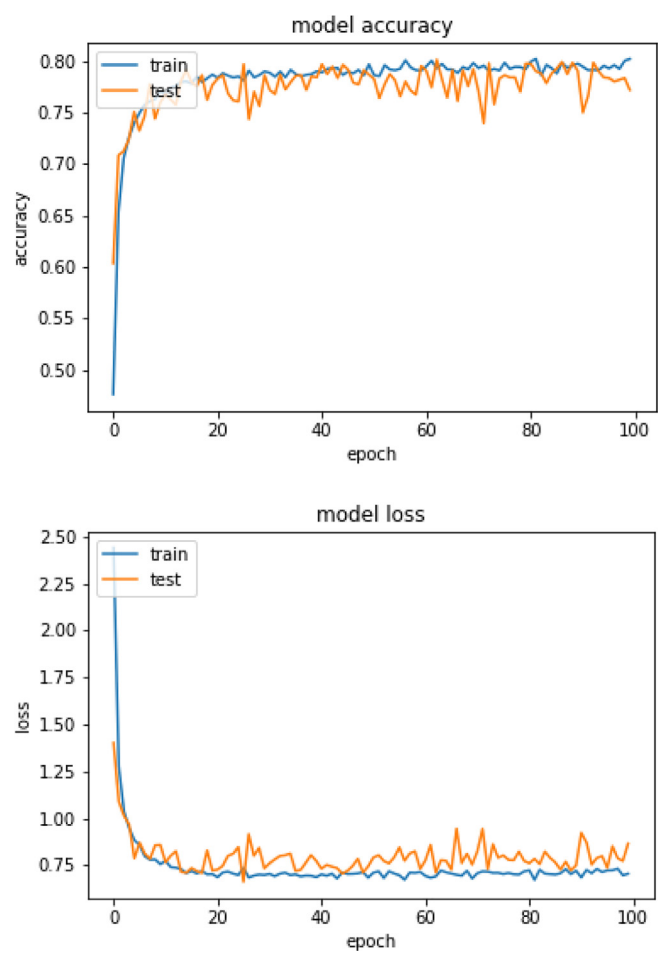

Fig. 8. VGG-16 accuracy and loss curve.

900 sample images were used for each class given in Table 1. Each class was divided into two parts automatically: training part (80%) and testing part (20%). Since training and testing data could be changed in each run, the training was performed five times for each dataset in the models, average accuracy values for 100 epoch and average loss values were given in Figs. 8–10. The models were implemented by using the Python programming language and the Keras library. Deep learning studies have been run on the GPU because they require high memory. Hardware specifications of the computer where the CNN models were trained and tested are:

CPU: 2x Intel Xeon® Silver 2.2 GHz, 32 GB RAM,
GPU: Nvidia Quadro P5000 16 GB 256Bit. The GPU has 2560 cores.

VGG16, VGG19 and ResNet50 deep learning models were used to classify the butterfly images. The models have been run on the GPU because it takes a long time for all learning and testing to be performed on the CPU. The parameters used in the models are given in Table 2.

The accuracy and loss curves obtained after starting the models are given in Figs. 8–10. VGG16 and VGG19 provide approximately the same results for our dataset. The ResNet model achieves higher success than VGGNET in the training phase, while it has a lower success in the test phase. A comparison of the CNN models used in this paper is presented in Table 3.

VGGNet shows similar performance in both training and testing phases. After 20 epochs of the training, it reaches the highest achievement (80%) and does not increase afterward. A similar characteristic pattern can be seen in the loss graph. Since no preprocessing has been performed on the input images, the success is satisfactory considering the problems of the position of butterflies, the shooting angle, butterfly distance, occlusion and background complexity. Fig. 10 shows the accuracy and model loss graphs of ResNet architecture. It is seen that up to 85% success achieved during the training phase where the ResNet architecture had the prob-

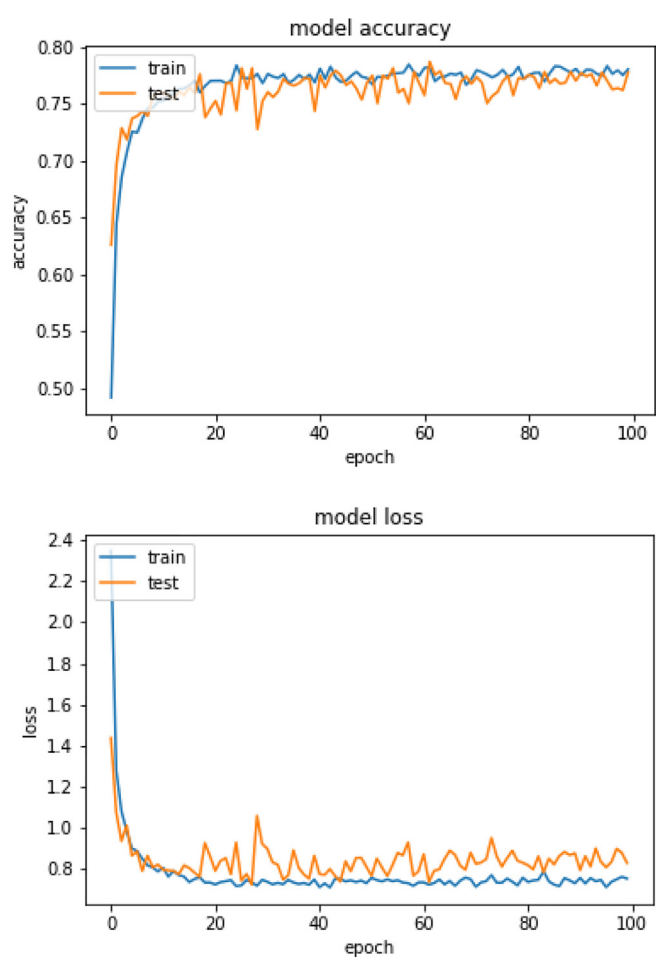

Fig. 9. VGG-19 accuracy and loss curve.

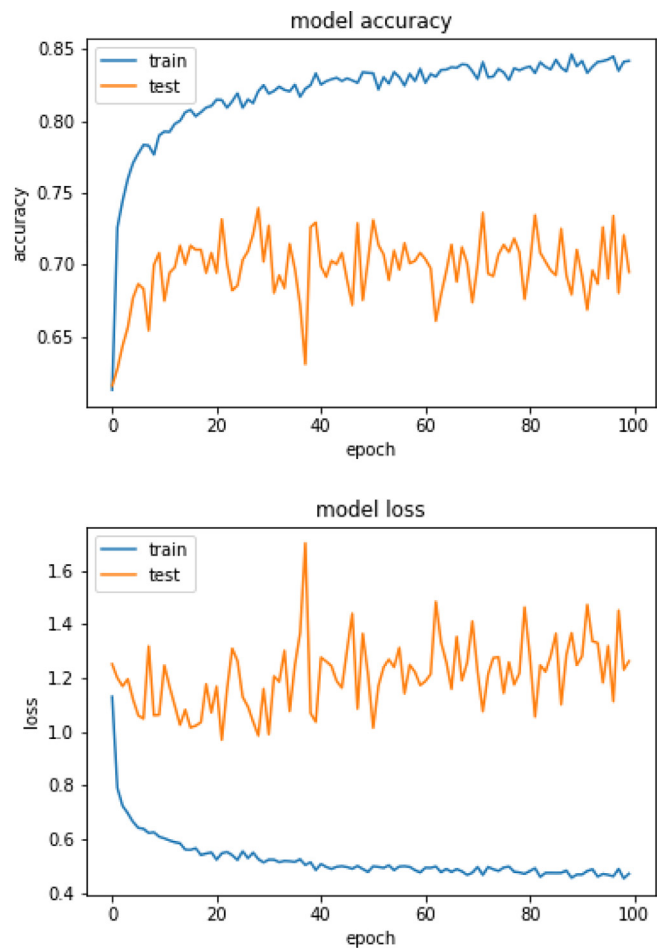

Fig. 10. ResNet accuracy and loss curve.

Table 2
Model parameters.

Parameter name	Value
Input sizes	224×224×3
Max Epoch	100
Batch Size	8
Number of Classes	10
Number of training images	7200
Number of test images	1800
Optimizer	AdaDelta

Table 3
Comparison of CNN models.

CNN model	Train accuracy	Test accuracy
VGG16	80.4%	79.5%
VGG19	77.6%	77.2%
ResNet	84.8%	70.2%

lem of overfitting (memorization) on this input dataset could not be achieved during the testing phase.

4. Conclusions

In this paper, a field-based dataset was created using butterfly images which are classified by expert entomologists taken from nature. The input images of butterflies are classified with deep learning architectures without using any feature extraction method. Transfer learning was carried out using pre-trained models. Comparison and evaluation of the experimental results obtained using three different network structures are conducted. According to the results, the highest success was achieved by VGG16 architecture. Although the images have some problems such as the position of butterflies, the shooting angle, butterfly distance, occlusion and background complexity, approximately 80% success was achieved for both test and training data. In conclusion, we observed that the transfer learning approach can be successfully applied in nature images. Our future research includes employing a mobile application by using the proposed pre-trained model in this study.

Declaration of Competing Interest

The authors declare that they have no known competing financial interests or personal relationships that could have appeared to influence the work reported in this paper.

Acknowledgments

The authors are grateful to the anonymous referees for their constructive comments and valuable suggestions which have helped us very much to improve the quality of the paper.

References

[1] N.E. Stork, How many species of insects and other terrestrial arthropods are there on Earth?, Annu. Rev. Entomol. 63 (2018) 31–45, https://doi.org/10.1146/annurev-ento-020117-043348.
[2] M. Pinzari, M. Santonico, G. Pennazza, E. Martinelli, R. Capuano, R. Paolesse, et al., Chemically mediated species recognition in two sympatric Grayling butterflies: *Hipparchia fagi* and *Hipparchia hermione* (Lepidoptera: Nymphalidae, Satyrinae), PLoS One 13 (6) (2018), https://doi.org/10.1371/journal.pone.0199997.
[3] Y. Kaya, O.F. Ertuğrul, R. Tekin, Two novel local binary pattern descriptors for texture analysis, Appl. Soft Comput. 34 (2015) 728–735, https://doi.org/10.1016/j.asoc.2015.06.009.
[4] Y. Kaya, L. Kaycı, Application of artificial neural network for automatic detection of butterfly species using color and texture features, Visual Comput. 30 (2014) 71–79, https://doi.org/10.1007/s00371-013-0782-8.
[5] C. Wen, D. Guyer, Image-based orchard insect automated identification and classification method, Comput. Electron. Agric. 89 (2012) 110–115, https://doi.org/10.1016/j.compag.2012.08.008.
[6] C. Xie, J. Zhang, R. Li, J. Li, P. Hong, J. Xia, P. Chen, Automatic classification for field crop insects via multiple-task sparse representation and multiple-kernel learning, Comput. Electron. Agric. 119 (2015) 123–132, https://doi.org/10.1016/j.compag.2015.10.015.
[7] L. Feng, B. Bhanu, J. Heraty, A software system for automated identification and retrieval of moth images based on wing attributes, Pattern Recogn. 51 (2016) 225–241, https://doi.org/10.1016/j.patcog.2015.09.012.
[8] M. Martineau, D. Conte, R. Raveaux, I. Arnault, D. Munier, G. Venturini, A survey on image-based insect classification, Pattern Recogn. 65 (2017) 273–284, https://doi.org/10.1016/j.patcog.2016.12.020.
[9] Q. Yao, J. Lv, Q.-J. Liu, G.-Q. Diao, B.-J. Yang, H.-M. Chen, J. Tang, An insect imaging system to automate rice light-trap pest identification, J. Integr. Agric. 11 (2012) 978–985, https://doi.org/10.1016/S2095-3119(12)60089-6.
[10] F. Faithpraise, P. Birch, R. Young, J. Obu, B. Faithpraise, C. Chatwin, Automatic plant pest detection and recognition using k-means clustering algorithm and correspondence filters, Int. J. Adv. Biotechnol. Res. 4 (2013) 189–199. http://sro.sussex.ac.uk/id/eprint/49042.
[11] L.K. Leow, L.-L. Chew, V.C. Chong, S.K. Dhillon, Automated identification of copepods using digital image processing and artificial neural network, BMC Bioinf. 16 (2015) S4, https://doi.org/10.1186/1471-2105-16-S18-S4.
[12] L.-Q. Zhu, Z. Zhang, Insect recognition based on integrated region matching and dual tree complex wavelet transform, Zhejiang Univ. Sci. C 12 (2011) 44–53, https://doi.org/10.1631/jzus.C0910740.
[13] M. Mayo, A.T. Watson, Automatic species identification of live moths, Knowl.-Based Syst. 20 (2007) 195–202, https://doi.org/10.1016/j.knosys.2006.11.012.
[14] A.T. Watson, M.A. O'Neill, I.J. Kitching, Automated identification of live moths (Macrolepidoptera) using digital automated identification System (DAISY), Syst. Biodivers. 1 (2004) 287–300, https://doi.org/10.1017/S1477200003001208.
[15] F.L.d. Silva, M.L. Grassi Sella, T.M. Francoy, A.H.R. Costa, Evaluating classification and feature selection techniques for honeybee subspecies identification using wing images, Comput. Electron. Agric. 114 (2015) 6877, https://doi.org/10.1016/j.compag.2015.03.012.
[16] J. Wang, C. Lin, L. Ji, A. Liang, A new automatic identification system of insect images at the order level, Knowl.-Based Syst. 33 (2012) 102–110, https://doi.org/10.1016/j.knosys.2012.03.014.
[17] C. Abeysinghe, A. Welivita, I. Perera, Snake image classification using Siamese networks, in: Proceedings of the 2019 3rd International Conference on Graphics and Signal Processing, 2019, pp. 8–12, https://doi.org/10.1145/3338472.3338476.
[18] http:// adamerkelebek.org, Butterflies Monitoring & Photography Society of Turkey, 2019.
[19] Y. LeCun, Y. Bengio, G. Hinton, Deep learning, Nature 521 (2015) 436–444, https://doi.org/10.1038/nature14539.
[20] C. Szegedy, V. Vanhoucke, S. Ioffe, J. Shlens, Z. Wojna, Rethinking the inception architecture for computer vision, in: IEEE conference on computer vision and pattern recognition (CVPR), 2016, pp. 2818–2826, https://doi.org/10.1109/CVPR.2016.308.
[21] R. Collobert, J. Weston, A unified architecture for natural language processing: deep neural networks with multitask learning, in: ICML '08: Proceedings of the 25th International Conference on Machine Learning, 2008, pp. 160–167, https://doi.org/10.1145/1390156.1390177.
[22] G. Hinton et al., Deep neural networks for acoustic modeling in speech recognition: the shared views of four research groups, IEEE Signal Process Mag. 29 (2012) 82–97, https://doi.org/10.1109/MSP.2012.2205597.
[23] K. Fukushima, Neocognitron: a self-organizing neural network model for a mechanism of pattern recognition unaffected by shift in position, Biol. Cybern. 36 (1980) 193–202, https://doi.org/10.1007/BF00344251.
[24] Y. LeCun, Y. Bengio, Convolutional networks for images, speech, and time series, in: The Handbook of Brain Theory and Neural Networks, MIT Press, Cambridge, 1995, pp. 255–258.
[25] J. Wang, Y. Yang, J. Mao, Z. Huang, C. Huang, W. Xu, CNN-RNN: a unified framework for multi-label image classification, in: IEEE Conference on Computer Vision and Pattern Recognition (CVPR), 2016, pp. 2285–2294, https://doi.org/10.1109/CVPR.2016.251.
[26] F. Schroff, D. Kalenichenko, J. Philbin, Facenet: a unified embedding for face recognition and clustering, in: IEEE Conference on Computer Vision and Pattern Recognition (CVPR), 2015, pp. 815–823, https://doi.org/10.1109/CVPR.2015.7298682.
[27] D. Cheng, Y. Gong, S. Zhou, J. Wang, N. Zheng, Person re-identification by multi-channel parts-based CNN with improved triplet loss function, in: IEEE Conference on Computer Vision and Pattern Recognition (CVPR), 2016, pp. 1335–1344, https://doi.org/10.1109/CVPR.2016.149.
[28] P. Sermanet, Y. LeCun, Traffic sign recognition with multi-scale Convolutional Networks, in: The 2011 International Joint Conference on Neural Networks, 2011, pp. 2809–2813, https://doi.org/10.1109/IJCNN.2011.6033589.
[29] M. Liang, X. Hu, Recurrent convolutional neural network for object recognition, in: IEEE Conference on Computer Vision and Pattern Recognition (CVPR), 2015, pp. 3367–3375, https://doi.org/10.1109/CVPR.2015.7298958.
[30] A. Krizhevsky, I. Sutskever, G.E. Hinton, Imagenet classification with deep convolutional neural networks, Commun. ACM 60 (2017) 84–90, https://doi.org/10.1145/3065386.
[31] K. Simonyan, A. Zisserman, Very deep convolutional networks for large-scale image recognition, International Conference on Learning Representations, 2015.
[32] A.G. Howard, M. Zhu, B. Chen, D. Kalenichenko, W. Wang, T. Weyand, M. Andreetto, H. Adam, Mobilenets: efficient convolutional neural networks for mobile vision applications, (2017) arXiv:1704.04861.
[33] K. He, X. Zhang, S. Ren, J. Sun, Deep residual learning for image recognition, in: IEEE Conference on Computer Vision and Pattern Recognition (CVPR), 2016, pp. 770–778, https://doi.org/10.1109/CVPR.2016.90.
[34] J. Deng, W. Dong, R. Socher, L. Li, K. Li, L. Fei-Fei, Imagenet: a large-scale hierarchical image database, in: 2009 IEEE conference on computer vision and pattern recognition, 2009, pp. 248–255, https://doi.org/10.1109/CVPR.2009.5206848.
[35] A. Canziani, A. Paszke, E. Culurciello, An analysis of deep neural network models for practical applications, (2016) arXiv:1605.07678.