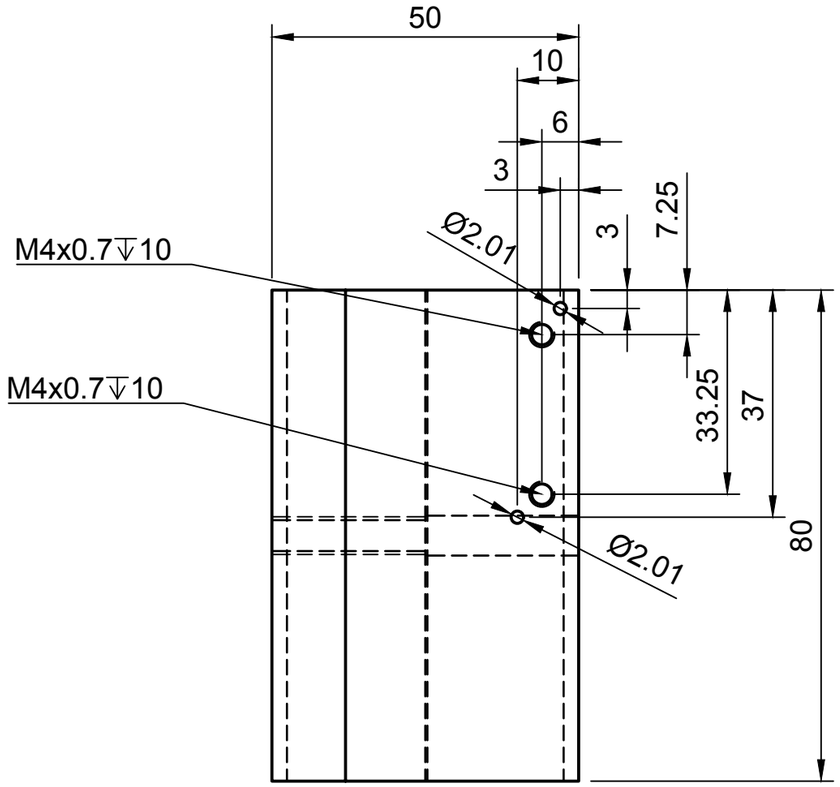

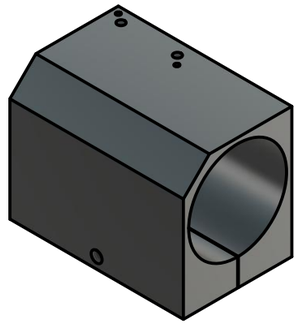

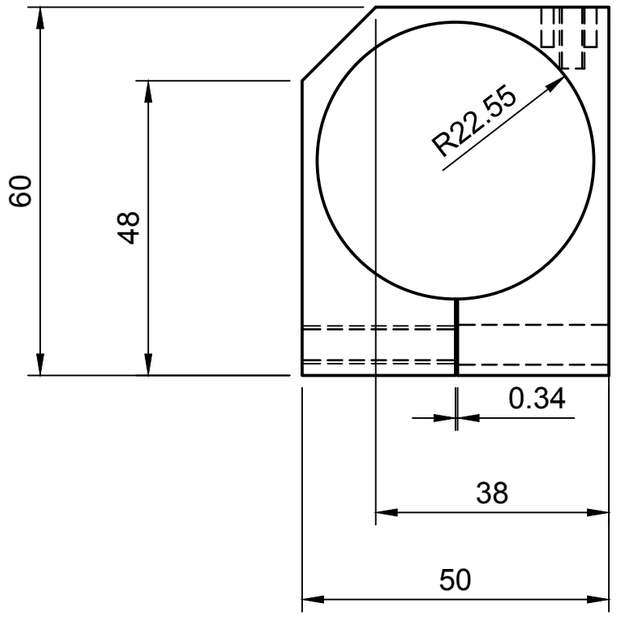

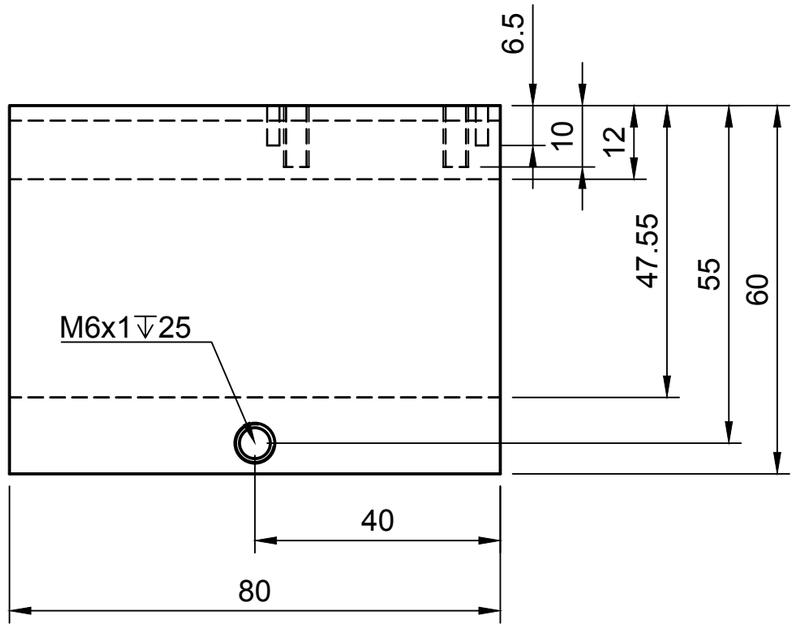

Dept.	Technical reference	Created by	Approved by
Vaziri Lab	1mm FOV	Siegfried Weisenburger 2/14/17	
		Document type: Production drawing	Document status: Pending approval
		Title: Sutter modified part 01 Material: aluminum Anodized: black	DWG No.: 1
			Rev.: 2 · Date of issue: · Sheet: 1/1