ASR6505 Default Circuit

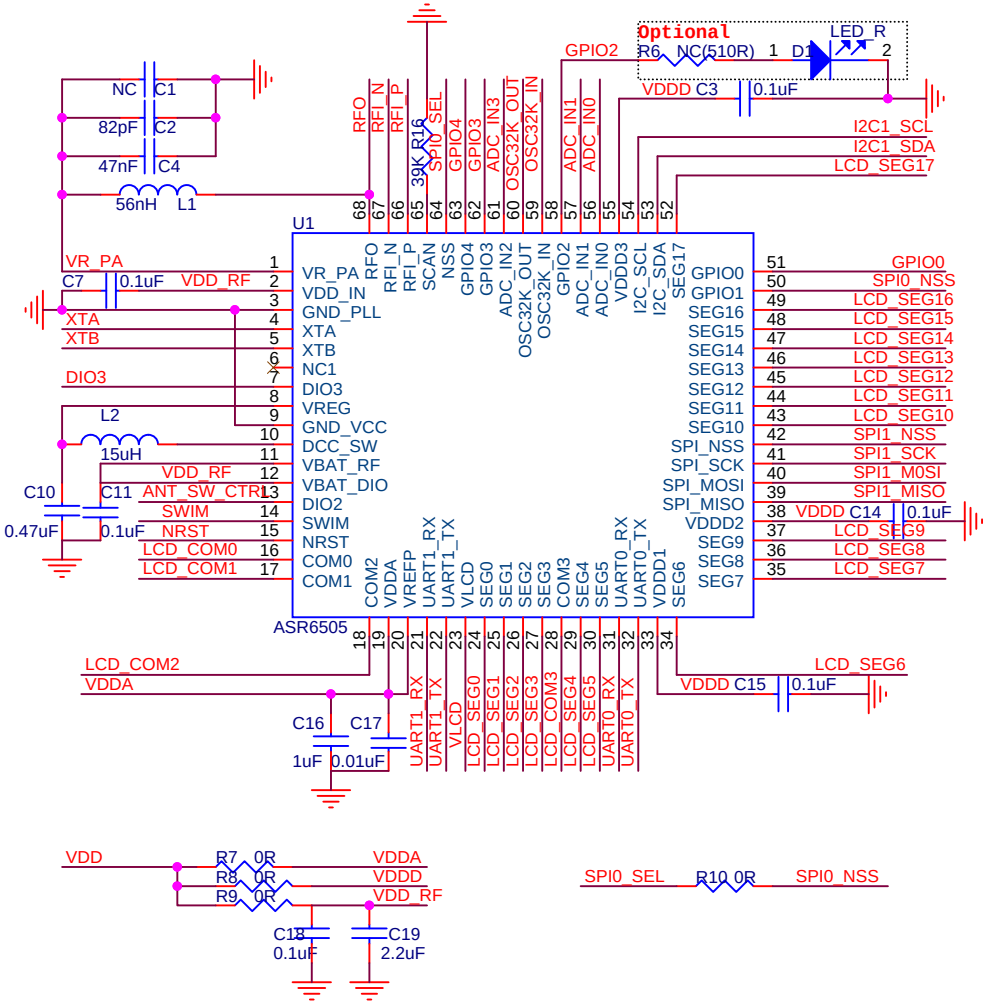

RF Input and Output Circuit:

1) RF matching network parameter default is 470MHz,
other frequency matching network parameter is different.

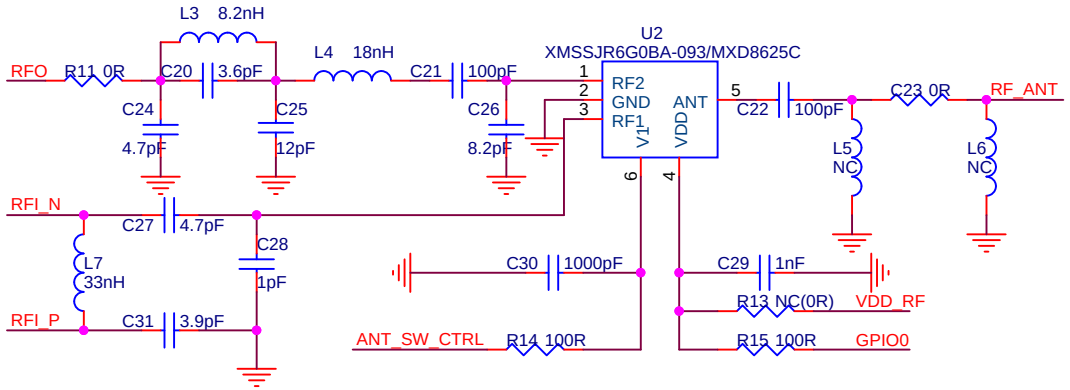

ASR6505 Module Interface

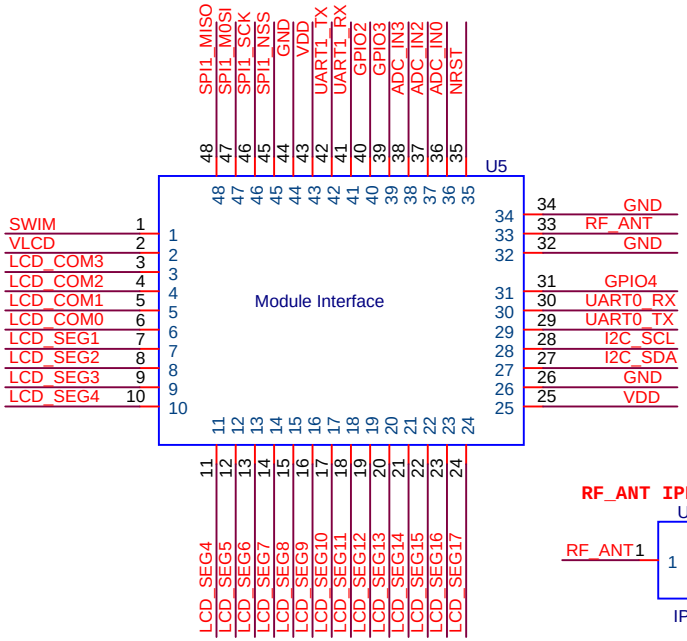

RF_ANT IPEX Interface

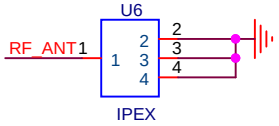

Crystal Oscillator Circuit

1)32MHz TCXO/XO for LoRa can use TCXO or XO.
a)BW Lower than 62.5K, recommand TCXO
b)ClassB application recommand TCXO
2)32.768kHz XO for MCU.
32.768KHz XO Load cap is 6pf

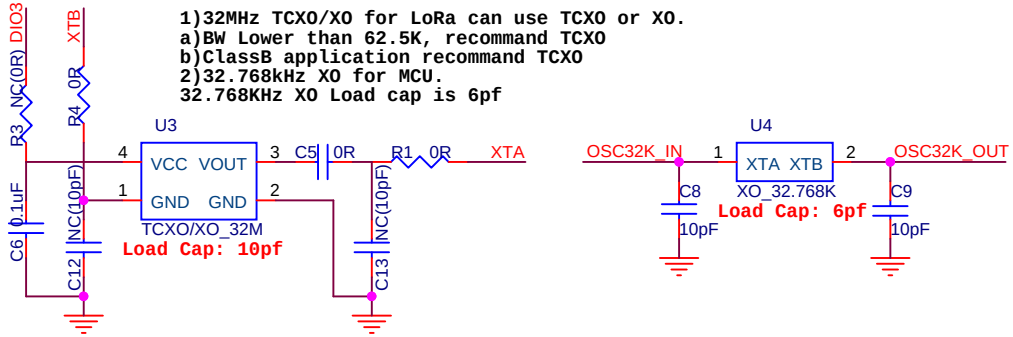

If XO is adopted:
1) C13, C6, R3, NC.
2) C5 solder 0R RES.
3) R1, R4 solder 0R RES

If TCXO is adopted:
1) R4,C13 NC
2) C5 solder 100pf ,C6 solder 0.1uf
3) R3,R1,C12 solder 0R RES

Title <Title>		
Size A4	Document Number ASR6505_MODULE_BOARD_V11	Rev V11
Date: Friday, May 24, 2019	Sheet 1 of 1	