| Rev | AWO # | Description | Date | Appr |
|---|---|---|---|---|
| - | | RELEASED | 10/30/06 | |

APPROVED: _____

DATE: _____ TITLE: _____

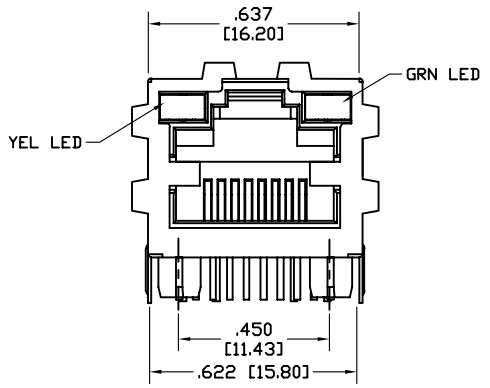


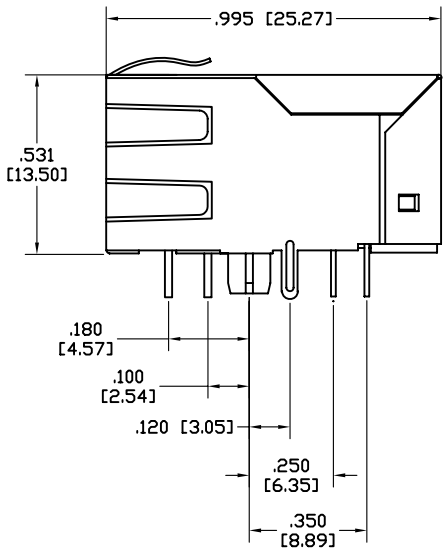


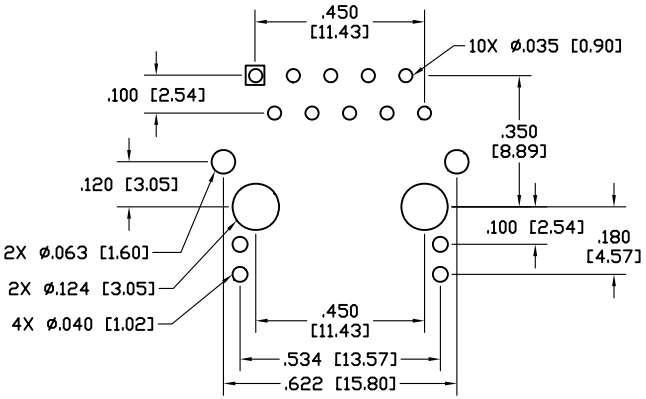


RECOMENDED
PCB LAYOUT

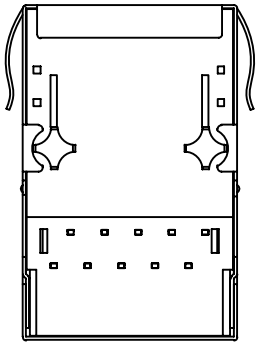

| X IN PART NUMBER | |
|---|---|
| X | FLASH |
| 0 | 15 µin Gold |
| 1 | 30 µin Gold |
| 2 | 50 µin Gold |

| LED SPECIFICATION | | | |
|---|---|---|---|
| STANDARD LED | WAVELENGTH | Forward V(max) | TYP |
| YELLOW | 590nm | 2.5V | 2.1V |
| GREEN | 565nm | 2.4V | 2.2V |

*WITH A FORWARD CURRENT OF 20mA

**SPECIFICATION:**
**Material:**
Insulator: Nylon 46 rated UL 94V–0, color black.
Contacts: Phosphor Bronze.
**Plating:**
"X" µin gold to MIL–G–45204, Type II, Grade C on contact area over 50 µin min nickel underplate to QQ–N–290, Grade C, tin on solder tails.
**Electrical:**
Operation voltage: 120 VAC max
Current rating: 1.5 Amp max
Contact resistance: 20 mohm max
Insulation resistance: 500 Mohm min @ 100 VDC between adjacent contacts
Dielectric withstanding voltage:
1000 VRMS 60 seconds min.
Operating temperature: –25°C to +90°C
**Environmental:**
Lead free, RoHS compliant.
Recommended soldering temp: 235 for 5 sec.
**CAVITY CONFORMS TO FCC RULES AND REGULATIONS, PART 68, SUBPART F**

RoHS COMPLIANT

UNLESS OTHERWISE SPECIFIED
ALL DIMENSIONS ARE INCHES [MM]
TOLERANCES: EXCEPT AS NOTED

| INCHES | | HOLES | |
|---|---|---|---|
| .X | ± .10 | Ø.X | ±.10 |
| .XX | ± .020 | Ø.XX | ±.015 |
| .XXX | ± .015 | Ø.XXX | ±.010 |

| APPROVALS | | DATE |
|---|---|---|
| DRAWN | BW | 10/30/06 |
| CHECKED | | |
| APPROVED | | |


**ADAM TECH**
909 Rahway Avenue, Union, NJ 07083
Phone: 908-687-5000 Fax: 908-687-5710


TITLE: MODULAR JACK,8P8C, RIGHT ANGLE, SHIELDED, W/LED'S & TRANSFORMER

| SIZE | PART NO. | REV. |
|---|---|---|
| X | MTJ-88SX1-FSD-PG6-RLG-M24 | - |

REF: | SCALE: NTS | SHEET 1 OF 2

| Rev | AWO # | Description | Date | Appr |
|---|---|---|---|---|
| SEE SHT 1 OF 2 FOR REVISION | | | | |

APPROVED: _____

DATE: _____ TITLE: _____

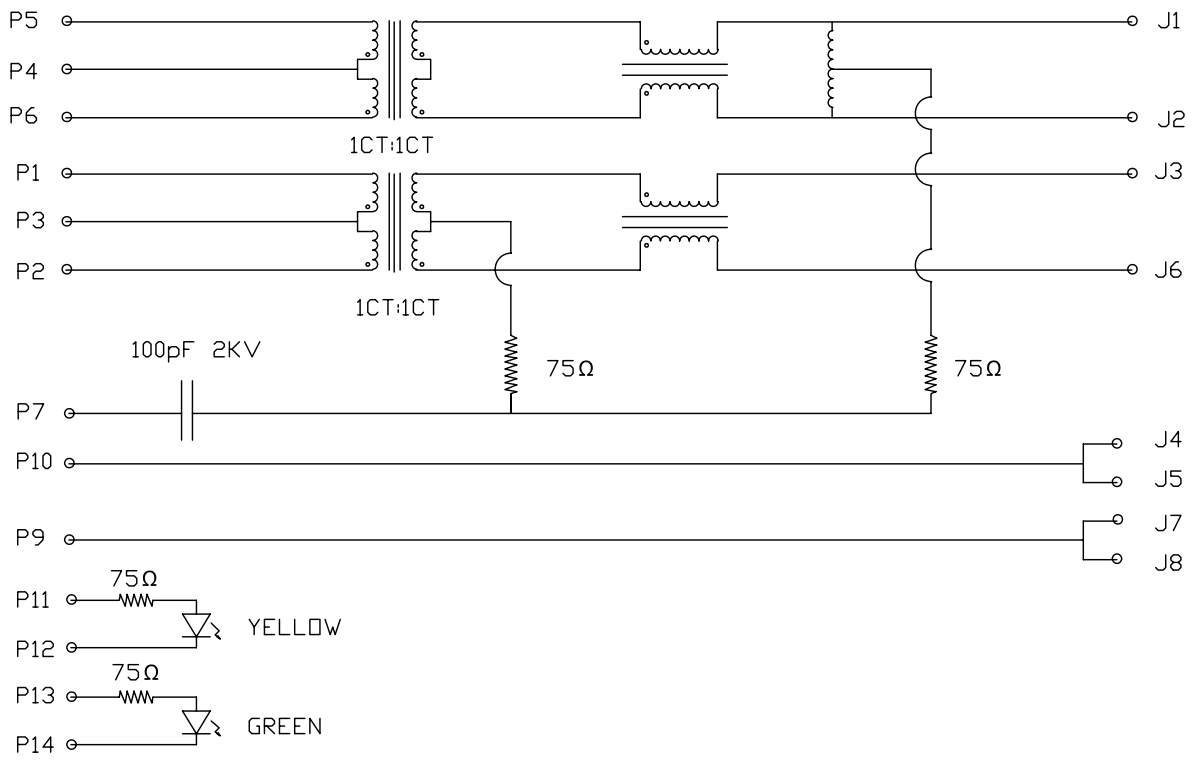


ELECTRICAL SPECIFICATIONS

1. Turns Ratio: (P5 ~ P6) : (J1 ~ J2) 1:1 ±3%
   (P1 ~ P2) : (J3 ~ J6) 1:1 ±3%
2. Inductance: (P5 ~ P6) 350uH min. @ 0.1V, 100KHZ, 8Ma DC Bias
   (P1 ~ P2) 350uH min. @ 0.1V, 100KHZ, 8Ma DC Bias
3. Leakage Inductance: P5 ~ P6 (with J1 and J2 Short): 0.3uH Max. @ 1 MHZ
   P1 ~ P2 (with J3 and J6 Short): 0.3uH Max. @ 1 MHZ
4. Interwinding Capacitor: (P1 ~ P2) & (P5 ~ P6): 35pF max. @ 1MHZ
5. DC Resistance: (J1 ~ J2) & (P3 ~ P4): 1.2 Ohms Max.
6. Return Loss: 1MHZ to 30MHZ: -18dB min / 30MHZ to 80MHZ: -12dB min
7. Dielectric Withstanding: 1500V AC
8. Insertion Loss: -1.1dB Min.
9. Cross Talk: 1MHZ to 100MHZ: 40dB Typ.
10. Common to Common mode Attention 30MHZ to 100MHZ: 35dB Typ.

UNLESS OTHERWISE SPECIFIED
ALL DIMENSIONS ARE INCHES [MM]
TOLERANCES: EXCEPT AS NOTED

| INCHES | | HOLES | |
|---|---|---|---|
| .X | ± .10 | Ø.X | ±.10 |
| .XX | ± .020 | Ø.XX | ±.015 |
| .XXX | ± .015 | Ø.XXX | ±.010 |

| APPROVALS | | DATE |
|---|---|---|
| DRAWN | BW | 10/30/06 |
| CHECKED | | |
| APPROVED | | |


**ADAM TECH**
909 Rahway Avenue, Union, NJ 07083
Phone: 908-687-5000 Fax: 908-687-5710


TITLE: MODULAR JACK,8P8C, RIGHT ANGLE, SHIELDED, W/LED'S & TRANSFORMER

| SIZE | PART NO. | REV. |
|---|---|---|
| X | MTJ-88SX1-FSD-PG6-RLG-M24 | - |

REF: | SCALE: NTS | SHEET 2 OF 2