Department of Electronics and Communication Engineering
Amrita School of Engineering, Coimbatore - 641112

Batch ID : 23CCE381A15

B.Tech – CCE
23CCE381 Open Lab – I

Exhibition Date:11/10/ 25

Vital Monitoring Smart Glove

CB.EN.U4CCE23026 – MUGILAN S S
CB.EN.U4CCE23042 – VEANKATA KRISHNAN S M
CB.EN.U4CCE23065 – KUSHAL R V

PROBLEM STATEMENT

In military operations, soldiers often operate under extreme environmental conditions — from high altitudes, scorching deserts to dense forests and conflicting zones. Monitoring their vital health parameters in real time is essential to ensure safety, rapid medical response, and to enhance the mission efficiency. However, traditional methods rely on manual health checks or bulky medical devices that are impractical in combat or remote terrains.

To address this challenge, we propose the design and simulation of an IoT-based **Vital Monitoring Smart Glove** that continuously tracks a soldier's **heart rate**, **body temperature**, **SpO_2 levels**, physical activity, and **location**. The glove is equipped with multiple sensors(DS18B20, MPU6050, MAX30102, and NEO-6M GPS) integrated with a ESP32 microcontroller for wireless data transmission.

APPROACH / DESIGN / METHODOLOGY

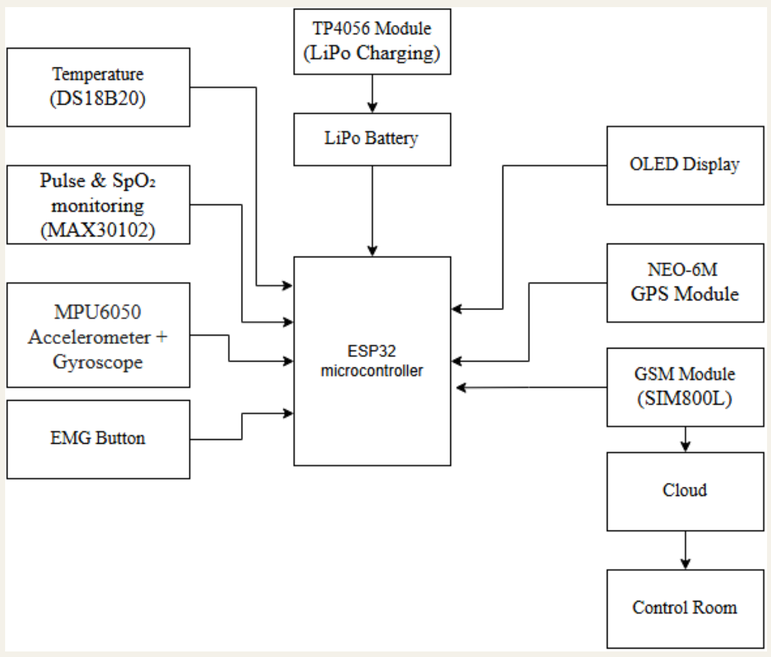

Fig 1. Architecture of Vital Monitoring Smart Glove

The Vital Monitoring Smart Glove is an ergonomically designed wearable system for real-time soldier health and safety monitoring. Powered by an ESP32 microcontroller and a 3.7V Li-Po battery (1000–1500 mAh) with TP4056 charging, it integrates multiple sensors and communication modules for continuous data tracking and transmission.

Key Features :

- **Vital Monitoring:** The MAX30102 measures heart rate and SpO_2, while the DS18B20 provides accurate body temperature.
- **Motion Detection:** The MPU6050 detects movement, orientation, and fall events.
- **Display & Communication:** A 0.96″ OLED display shows live readings. The NEO-6M GPS provides location data, and the SIM800L GSM module transmits information to the base camp.
- **Emergency Alerts:** Abnormal vitals, fall detection, or SOS button activation trigger immediate alerts with health and GPS data.

CIRCUIT DIAGRAM /ALGORITHM

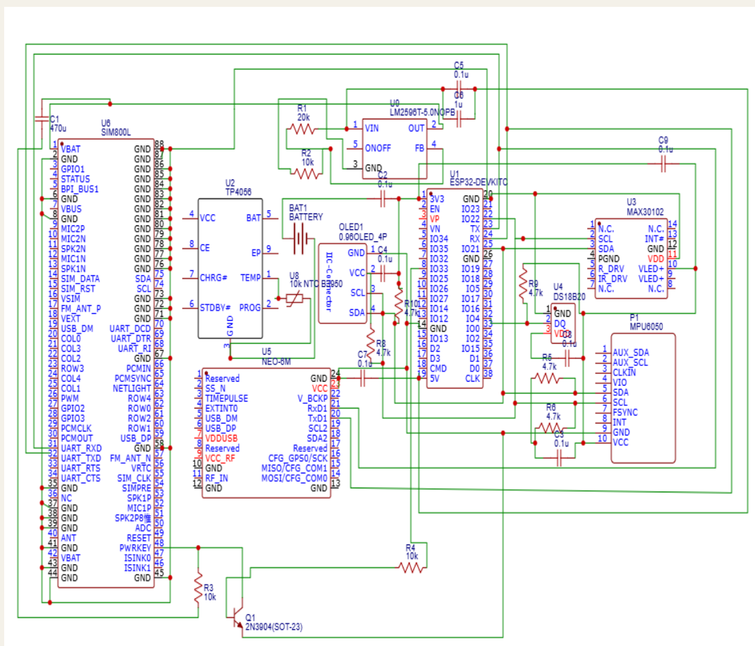

Fig 2. Circuit Diagram

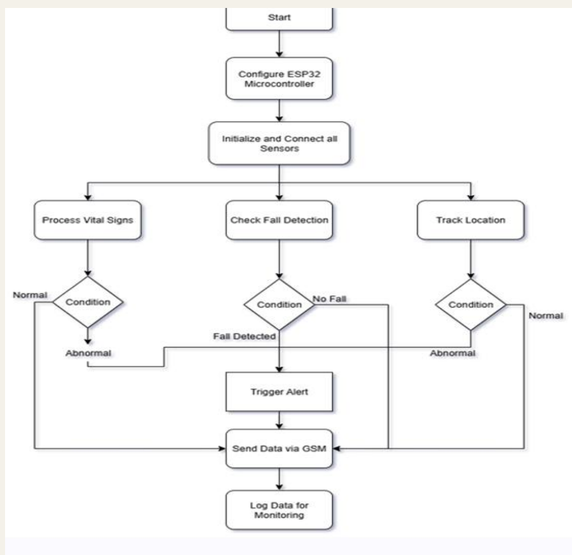

Fig 3. Working Principle

SIMULATION RESULTS

The System was successfully simulated using Wokwi Simulator with all other components virtually integrated on the ESP32. Sensor Readings, GPS Integration, ThingSpeak Visualization, Alert SOS Functionality and Database Retrieval was successfully implemented.

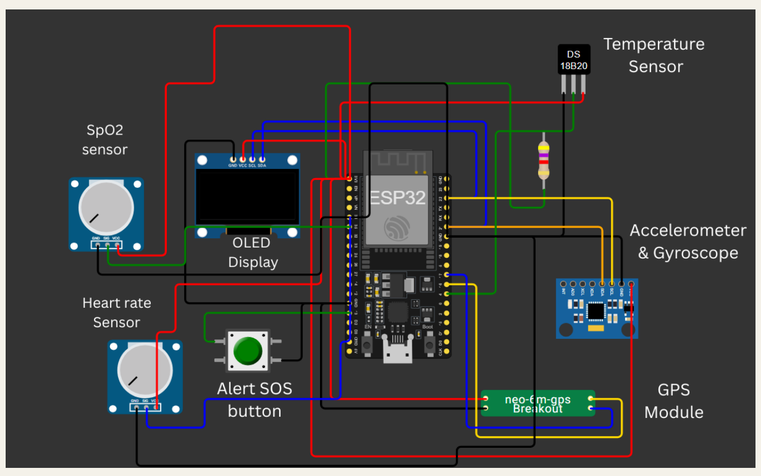

Fig 4. Wokwi Simulation

```
SERIAL MONITOR    CHIPS CONSOLE
!!! EMERGENCY SOS ACTIVATED !!!
!!! ALERT: Critical Condition or FALL/SOS Detected !!!
[2025-10-10 15:15:28] HR: 111.0 bpm | Temp: 36.50 °C | SpO2: 100.0 % |
Lat: -23.465982 | Lon: -51.840015 | Fall=0 | SOS=1 | Alert=1
ThingSpeak response: 200
Vitals Normal.
[2025-10-10 15:15:44] HR: 85.0 bpm | Temp: 34.25 °C | SpO2: 98.0 % | Lat:
-23.466066 | Lon: -51.840168 | Fall=0 | SOS=0 | Alert=0
ThingSpeak response: 200
```

Fig 5. Wokwi Serial Monitor Output

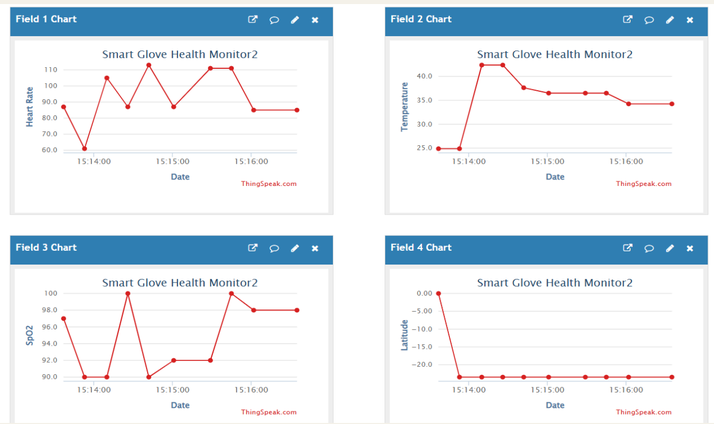

Fig 6. ThingSpeak Data Visualizations

RESULTS

- A prototype simulation of the Vital Monitoring Glove was successfully developed in Wokwi.
- The system accurately measured vital parameters such as heart rate, body temperature, and SpO_2.
- A custom-built GPS module was simulated in Wokwi to generate and transmit location data for testing purposes.
- All measured data was sent to the **ThingSpeak** cloud platform, where live plots and visualizations displayed the vitals in real time.
- The data was further transmitted to a web dashboard accessible by base camp officials.
- Officials can monitor each soldier's data individually and track real-time status remotely and **SOS alerts** were successfully simulated and received by the base camp during emergencies.
- Overall, the simulation validated **accurate sensing**, **data transmission**, **visualization**, and **alert functionalities** of the proposed glove system.

REFERENCES

[1] T. Wu, F. Wu, C. Qiu, J.-M. Redouté, and M. R. Yuce, "A rigid-flex wearable health monitoring sensor patch for IoT-connected healthcare applications," *IEEE Internet of Things Journal*, vol. 7, no. 8, pp. 6932–6945, Aug. 2020, doi: doi.org/10.1109/JIOT.2020.2977164.

[2] S. K. Sinchana, H. S. Lokeshwari, A. David, H. B. J. Harshitha, and A. D. P. Amulya, "Health monitoring and tracking systems for soldiers using IoT," *International Journal of Advanced Research in Ideas and Innovations in Technology (IJARIIT)*, vol. 11, no. 2, pp. 219–223, 2025. [Online].Available: https://www.ijariit.com/manuscripts/v11i2/V11I2-1370.pdf

[3] D. K. Helen Prabha, S. Khaniya, V. Harshitha, T. Archana, and V. J. S. Lakshmi, "IoT Based Health Care Monitoring System for Army Soldiers," International Journal of Scientific Research in Engineering and Management (IJSREM), vol. 8, no. 2, pp. 1–4, Feb. 2024. [Online].Available: https://ijsrem.com/download/iot-based-health-care-monitoring-system-for-army-soldiers/#1665222399634-8b57ded9-0746