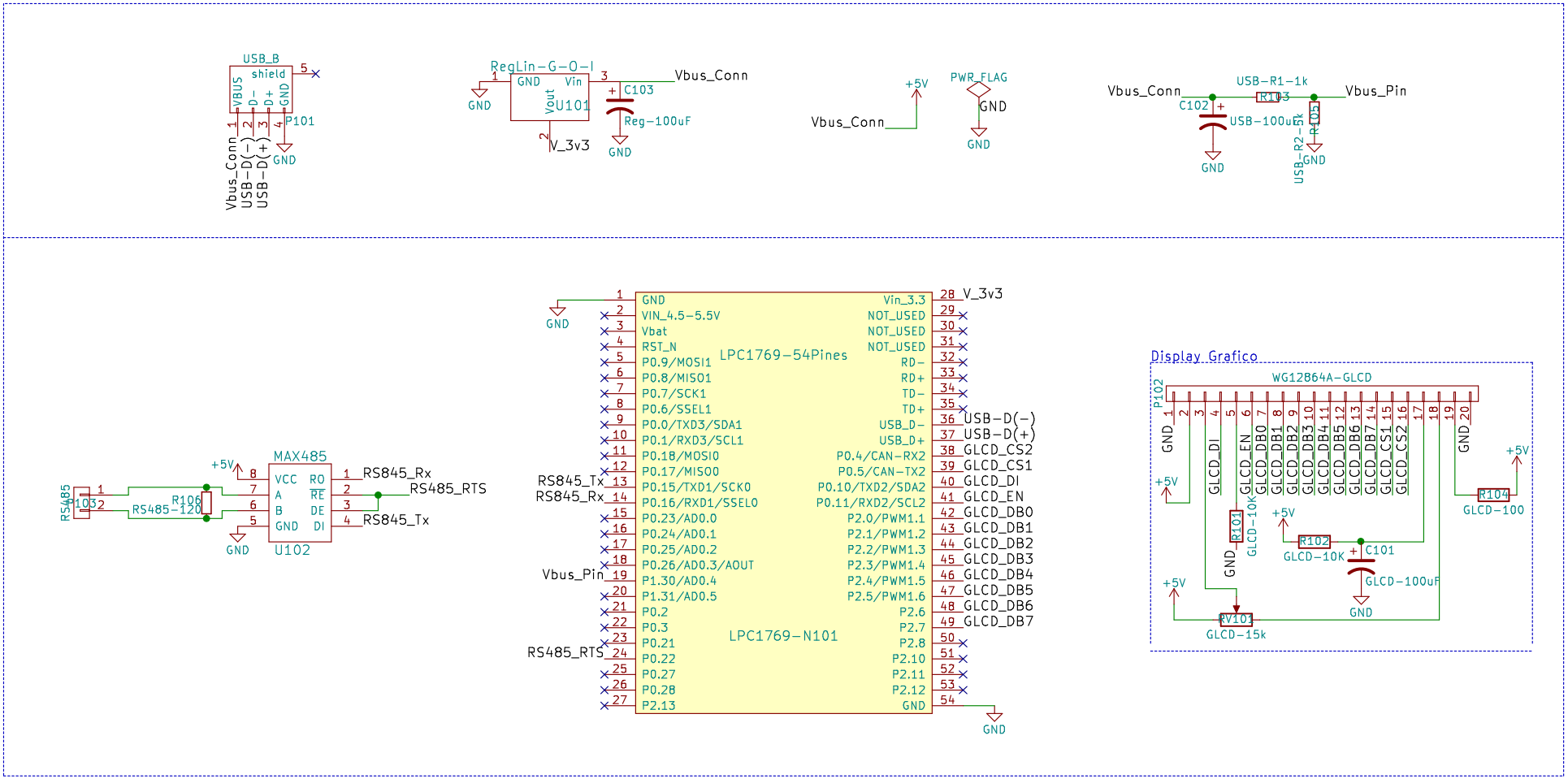

Ver 4

Sheet: /
File: Modulo_USB.sch

Title: Modulo Lector

Size: A4	Date:	**Rev: 4**
KiCad E.D.A. kicad 4.0.5+dfsg1-4		Id: 1/1