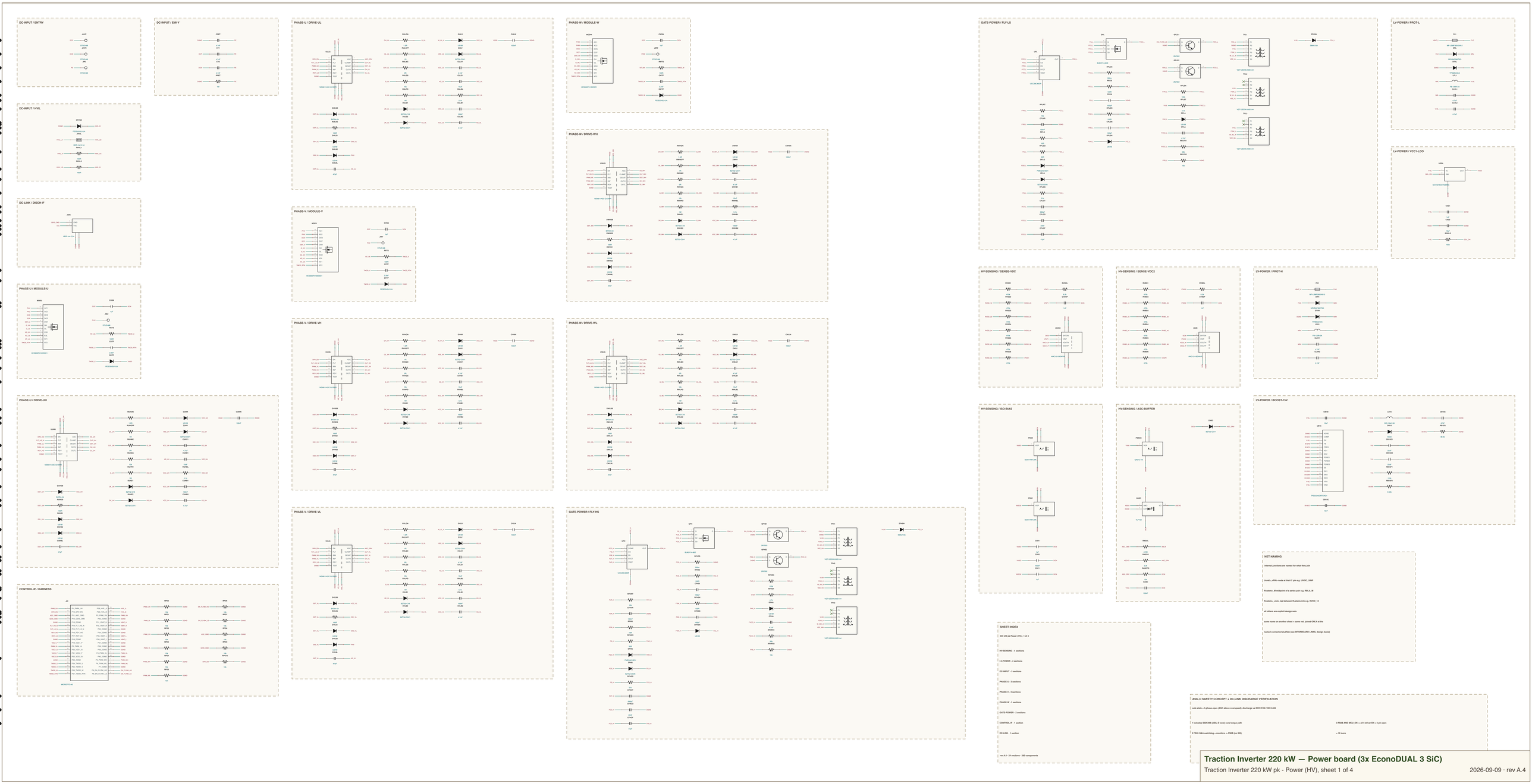

Traction Inverter 220 kW — Power board (3x EconoDUAL 3 SiC)

Traction Inverter 220 kW pk - Power (HV), sheet 1 of 4

2026-09-09 · rev A.4

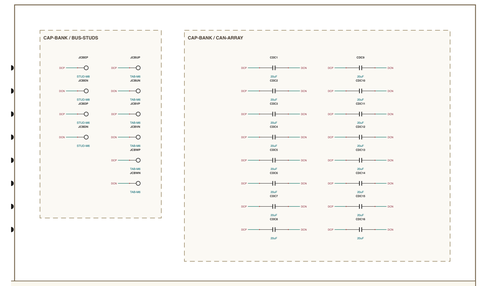

rter — Cap bank (busbar assembly, 320 uF)

20 kW pk - Cap bank (HV, busbar), sheet 2 of 4

2026-09-09 · rev A.4

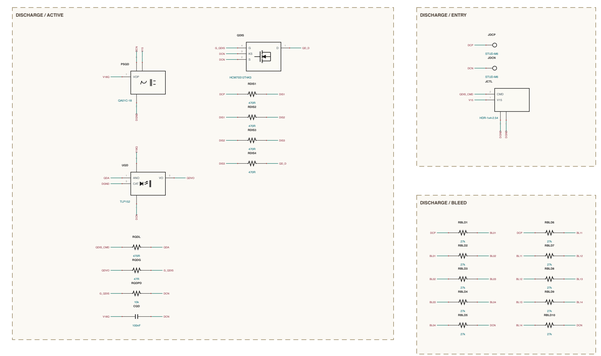

220 kW pk Discharge (PK) board

NET NAMING: DCHRL_LPRN + LCAN

Traction Inverter — Discharge board (bolt-on, XM3 pattern)

Traction Inverter 220 kW pk - Discharge (HV, bolt-on), sheet 3 of 4

2026-09-09 · rev A.4

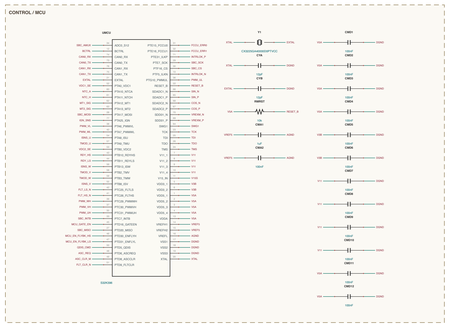

Traction Inverter — Control Card (S32K396 + FS26, ASIL D)

Traction Inverter 220 kW pk - Control card (LV), sheet 4 of 4

2026-09-09 · rev A.4