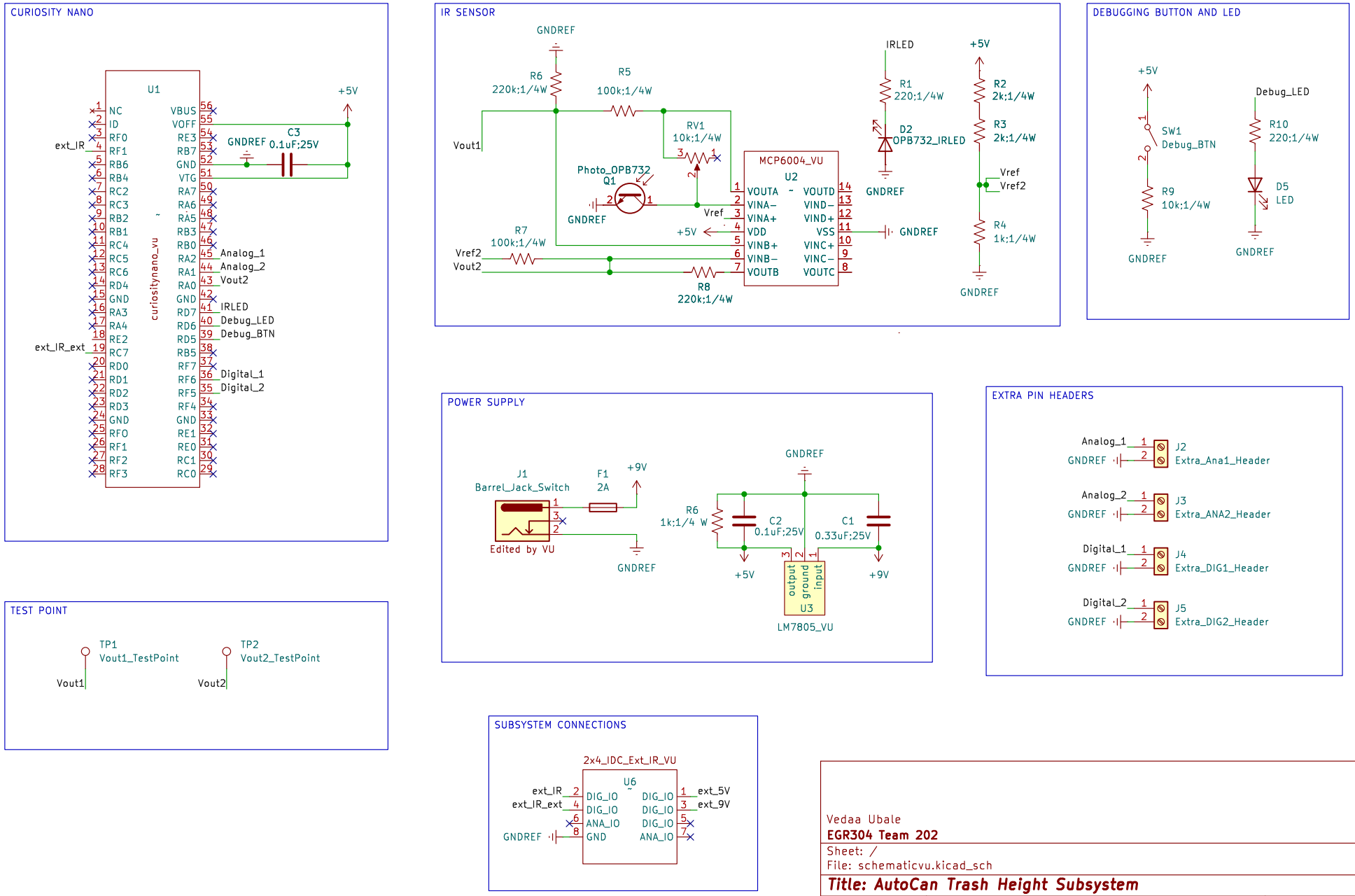
CURIOSITY NANO
U1
curiositynano_vu
NC
ID
RF0
RF1
RB6
RB4
RC2
RC3
RB2
RB1
RC4
RC5
RC6
RD4
GND
RA3
RA4
RE2
RC7
RD0
RD1
RD2
RD3
GND
RF0
RF1
RF2
RF3
VBUS
VOFF
RE3
RB7
GND
VTG
RA7
RA6
RA5
RB3
RB0
RA2
RA1
RA0
GND
RD7
RD6
RD5
RB5
RF7
RF6
RF5
RF4
GND
RE1
RE0
RC1
RC0
ext_IR
ext_IR_ext
Analog_1
Analog_2
Vout2
IRLED
Debug_LED
Debug_BTN
Digital_1
Digital_2
+5V
GNDREF
C3
0.1uF;25V
IR SENSOR
GNDREF
R6
220k;1/4W
R5
100k;1/4W
RV1
10k;1/4W
Vout1
Photo_OPB732
Q1
GNDREF
Vref
+5V
R7
100k;1/4W
Vref2
Vout2
R8
220k;1/4W
MCP6004_VU
U2
VOUTA
VINA−
VINA+
VDD
VINB+
VINB−
VOUTB
VOUTD
VIND−
VIND+
VSS
VINC+
VINC−
VOUTC
GNDREF
IRLED
R1
220;1/4W
D2
OPB732_IRLED
GNDREF
+5V
R2
2k;1/4W
R3
2k;1/4W
Vref
Vref2
R4
1k;1/4W
GNDREF
DEBUGGING BUTTON AND LED
+5V
SW1
Debug_BTN
R9
10k;1/4W
GNDREF
Debug_LED
R10
220;1/4W
D5
LED
GNDREF
POWER SUPPLY
J1
Barrel_Jack_Switch
Edited by VU
F1
2A
+9V
GNDREF
R6
1k;1/4 W
C2
0.1uF;25V
C1
0.33uF;25V
GNDREF
+5V
+9V
output
ground
input
U3
LM7805_VU
EXTRA PIN HEADERS
Analog_1
GNDREF
J2
Extra_Ana1_Header
Analog_2
GNDREF
J3
Extra_ANA2_Header
Digital_1
GNDREF
J4
Extra_DIG1_Header
Digital_2
GNDREF
J5
Extra_DIG2_Header
TEST POINT
TP1
Vout1_TestPoint
Vout1
TP2
Vout2_TestPoint
Vout2
SUBSYSTEM CONNECTIONS
2x4_IDC_Ext_IR_VU
U6
ext_IR
ext_IR_ext
GNDREF
DIG_IO
DIG_IO
ANA_IO
GND
DIG_IO
DIG_IO
DIG_IO
ANA_IO
ext_5V
ext_9V
Vedaa Ubale
EGR304 Team 202
Sheet: /
File: schematicvu.kicad_sch
Title: AutoCan Trash Height Subsystem
Size: A4
Date:
Rev:
KiCad E.D.A. 9.0.4
Id: 1/1