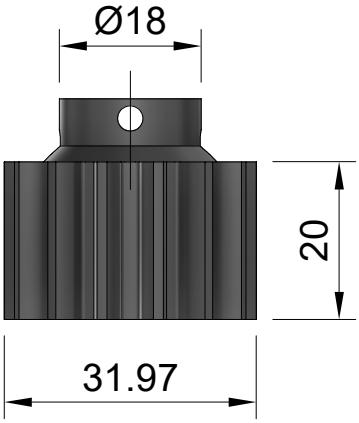

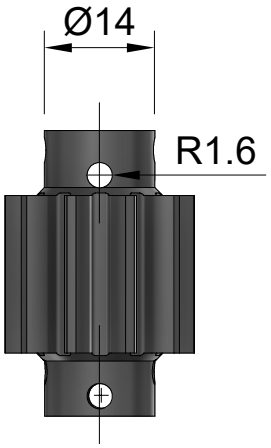

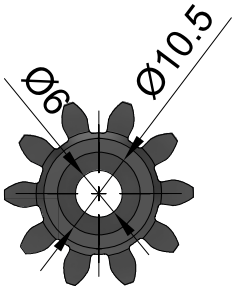

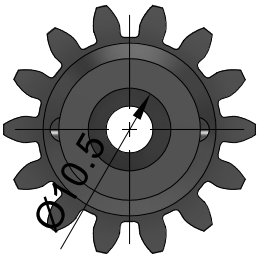

Dept.	Technical reference	Created by Vedad Halilovic	Approved by	
		Document type	Document status	
		Title Spur gears	DWG No.	
			Rev. / Date of issue	Sheet 1/1