E3-238 ANALOG CIRCUITS LAB

Lab Assignment-9

Two Stage Op-Amp Design

Vedant Saxena

SR. NO. 26110 , MTech

Microelectronics and VLSI Design

vedantsaxena@iisc.ac.in

PROBLEM DESCRIPTION

In this homework, you are to design a basic two-stage CMOS operational amplifier (op-amp), as shown in Figure 1, for the specifications given in Table 1. The op-amp consists of a differential input stage ($M1$ and $M2$) driving a current mirror load ($M3$ and $M4$) followed by a common-source amplifier stage ($M7$). The devices $M5$ and $M7$ form the tail current source for the differential stage and the current source load for the common- source stage. Cc and Rz are the compensation capacitor and the zero-nulling resistor.

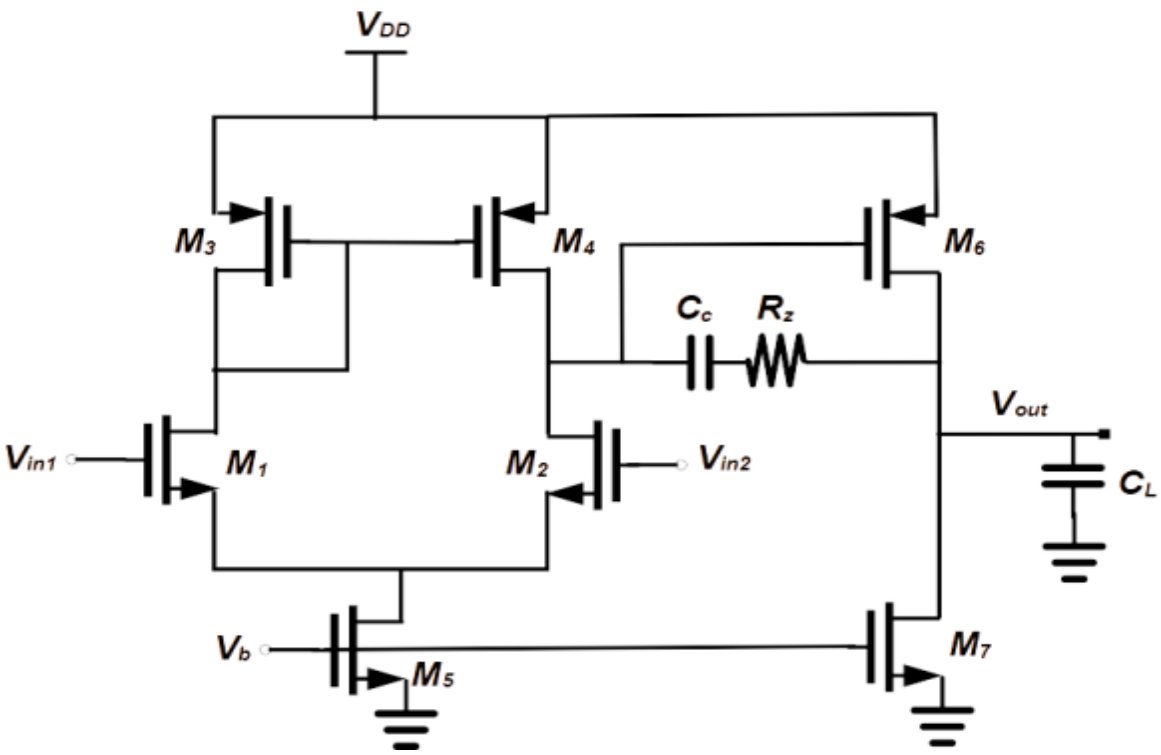

Figure 1 A basic two-stage operational amplifier.

Table 1 Design specifications @ [Supply voltage = **1.8** $\boldsymbol{V}$, Load CL = **100** $\boldsymbol{fF}$, and Temperature = **27°** $\boldsymbol{C}$]

S.N.	Parameter	Symbol		Value
1.	Open-loop, differential-mode, DC voltage gain	A_0	≥	$1000\ V/V$ $(60\ dB)$
2.	Unity-gain frequency	f_{UG}	≥	$10\ MHz$
3.	Phase margin	PM	≥	$75°$
4.	Common-mode rejection ratio	$CMRR$	≥	$50\ dB$
5.	Power dissipation	P_d	≤	$30\ \mu W$

Hand Calculation for biasing the circuit:

Two Stage Amplifier:→

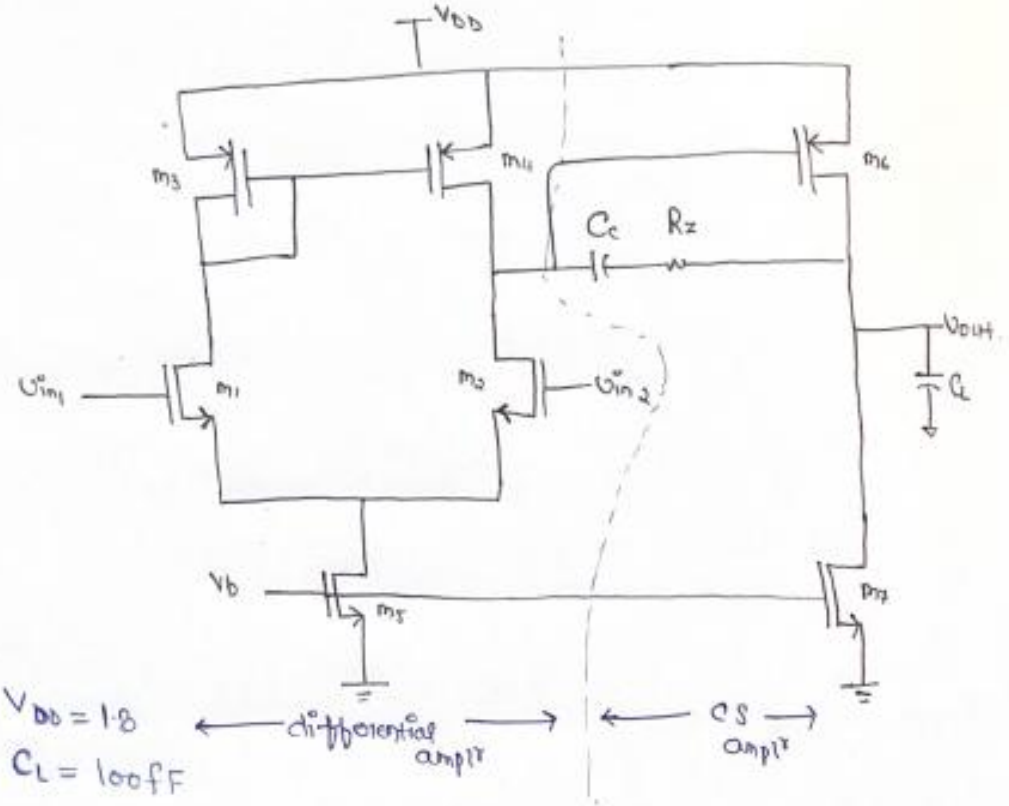

$V_{DD} = 1.8$

$C_L = 100fF$

Specs:

$A_0 \geq (60dB)\ (1000)$

$PM \geq 75°$

$f_{UG} \geq 10\ MHz.$

$CMRR \geq 50\ dB.$

Transfer fn: $G(s) = \dfrac{G\left(1 - \frac{s}{z_1}\right)}{\left(1 + \frac{s}{P_1}\right)\left(1 + \frac{s}{P_2}\right)}$

$PM = 180° + \text{Phase @ GB}$, $\omega_0 = G|P_1|$.

$\Rightarrow 180° - \tan^{-1}\left(\frac{\omega_0}{|P_1|}\right) - \tan^{-1}\left(\frac{\omega_0}{|P_2|}\right) - \tan^{-1}\left(\frac{\omega_0}{|z_1|}\right) > 75°$

Design strategy ($|z_1| = 10\omega_0$)

$$105^\circ > \tan^{-1}(G_1) + \tan^{-1}\left(\frac{\omega_0}{|P_2|}\right) + \tan^{-1}(0.1)$$

$$105^\circ > 90^\circ + \tan^{-1}\left(\frac{\omega_0}{|P_2|}\right) + 5.71$$

$$\tan^{-1}\left(\frac{\omega_0}{|P_2|}\right) \leq 9.3$$

$$\Rightarrow \left(|P_2| \geq 6.12\,\omega_0\right)$$

$$\Rightarrow \left(Z_1 = \frac{g_{m6}}{C_c}\right) \qquad \left(\omega_0 = \frac{g_{m2}}{C_c}\right)$$

$$\Rightarrow \left(P_2 = \text{effective pole} : \frac{g_{m6}}{C_L}\right)$$

$$\Rightarrow |Z_1| > 10\,\omega_0 \Rightarrow \frac{g_{m6}}{C_c} > 10 \cdot \frac{g_{m2}}{C_c}$$

$$\Rightarrow \left(g_{m6} > 10\, g_{m2}\right)$$

$$\Rightarrow \quad P_2 > 6.12\,\omega_0 \Rightarrow \frac{g_{m6}}{C_L} > 6.12\,\frac{g_{m2}}{C_c}$$

$$\Rightarrow \left(C_c > 61.2\,C_L\right)$$

$$\Rightarrow \left(R_z = \frac{1}{g_{m6}}\right)$$

$\Rightarrow$ So, $C_c = 148\ pF$ (after tunning)

$$\Rightarrow \left(R_z = 25K\right)$$

for m_1 + m_2, They decides the GBP.

So, after tunning + Simulation using g_m/I_d method,

$$\Rightarrow \left(\frac{W}{L}\right)_{1,2} \Rightarrow 4. \qquad W = 2\mu, \quad L = 500\ nm$$

m_3 + m_4 decides the ICMR.

So, $\Rightarrow \left(\frac{W}{L}\right)_{3,4} = 1. \qquad W = L = 540\ nm.$

for C.S stage.

for proper gain $\Rightarrow \left(\frac{W}{L}\right)_6 = 6.8, \quad W = 6.8\mu, \quad L = 1\mu.$

Schematic:

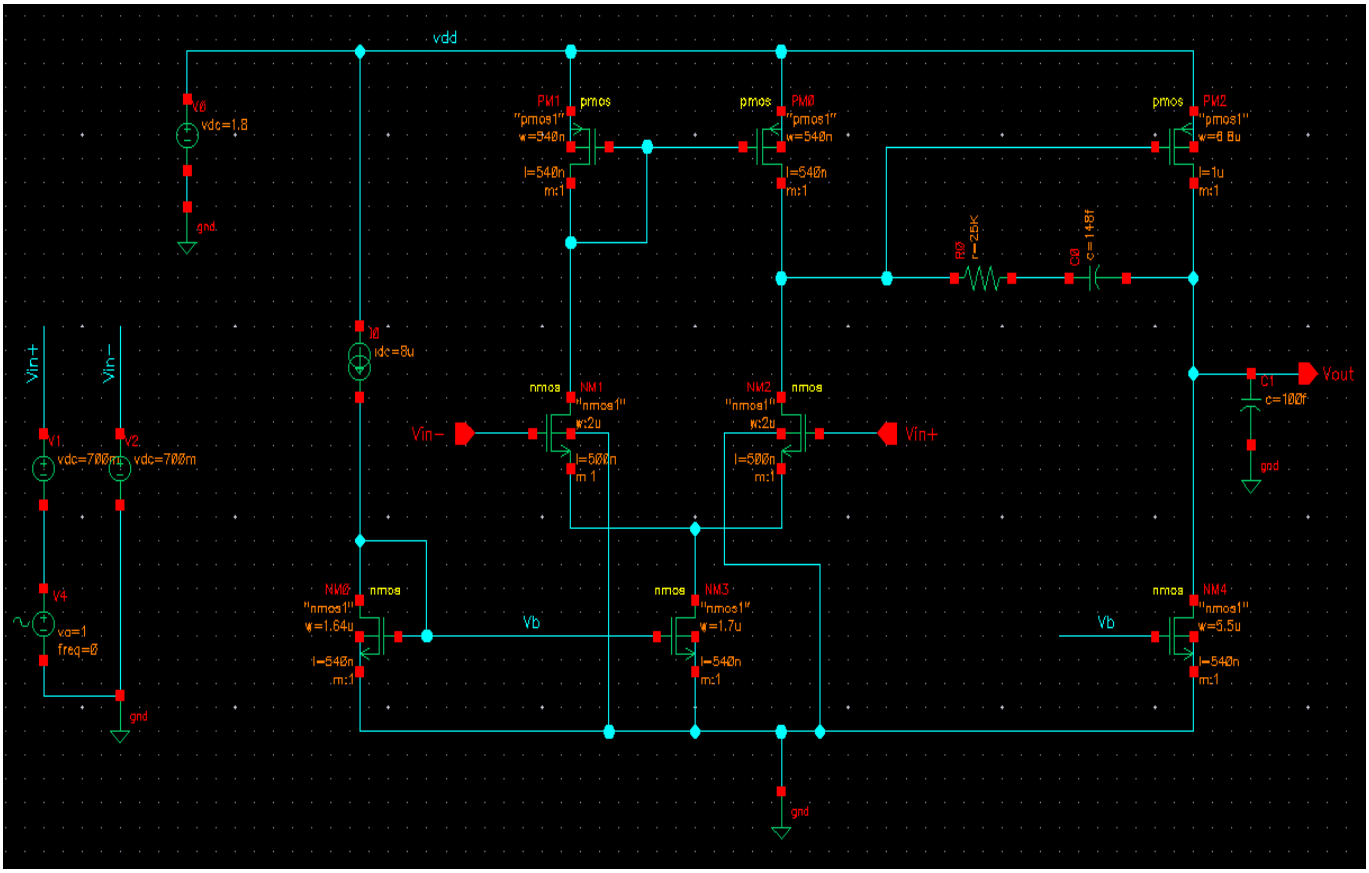

OP-AMP Design Parameters Chosen:

NM0	W=1.64 µ	L=540nm
NM1	W=2 µ	L=500nm
NM2	W=2 µ	L=500nm
NM3	W=1.7 µ	L=540nm
NM4	W=5.5 µ	L=540nm
PM0	W=540nm	L=540nm
PM1	W=540nm	L=540nm
PM2	W=6.8 µ	L=1µ
Rz	25K	-
Cc	148fF	-

Parameters	Symbols	Values Obtained
Open-loop, differential-mode, DC voltage gain	Ao,dm	72.95 dB
Open-loop, common-mode, DC voltage gain	Ao,cm	19.94 dB
Unity-gain frequency	f_{ug}	96.89 MHz
Phase Margin	PM	75.65°
Common Mode Rejection Ratio	CMRR	53 dB
Power Dissipation	PD	14.4µW

Open Loop Differential Gain and Phase Plot:

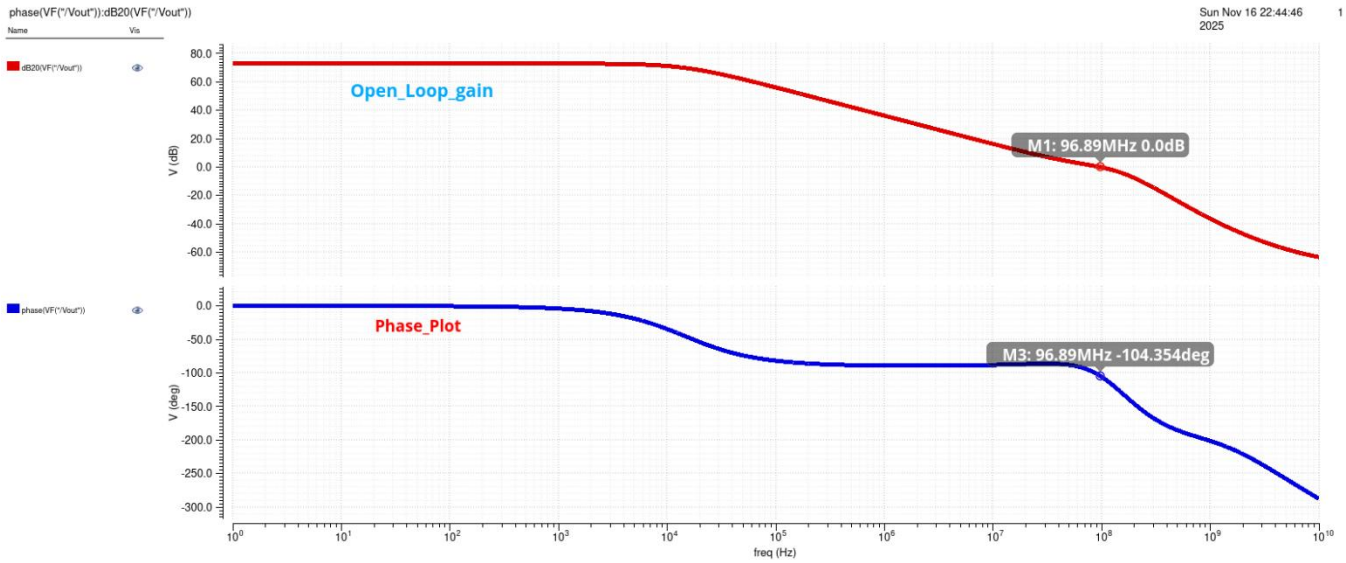

Open Loop Common Mode Gain Plot:

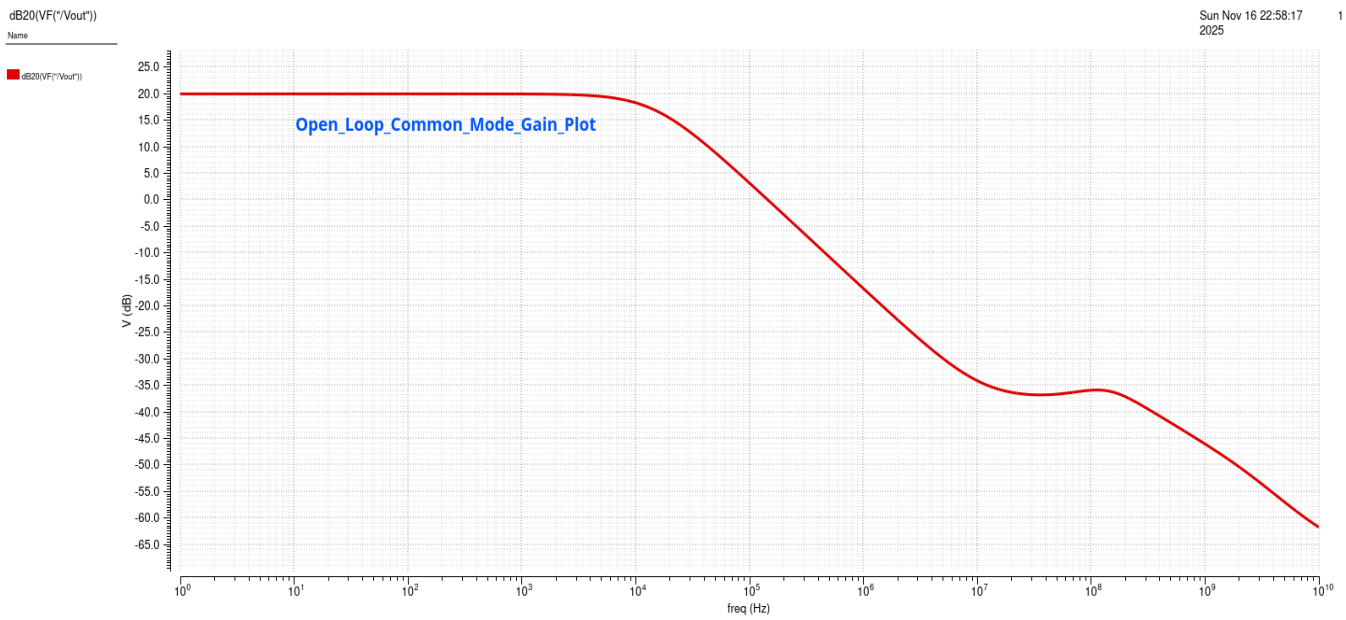

DC analysis

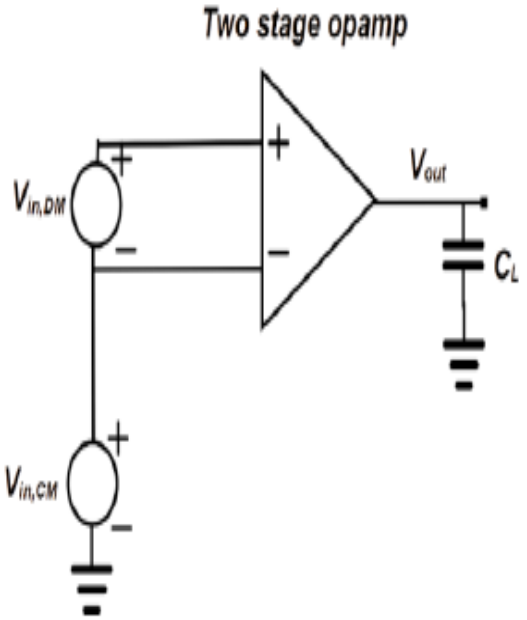

1. Obtain the common-mode range (CMR) curve by plotting the output voltage (V_{out}) with respect tothe common-mode input voltage (V_{ic}). (Sweep V_{ic} rail-to-rail)
2. Obtain the DC voltage transfer characteristic (VTC) curve by sweeping the differential input voltage (V_{id})and plotting the output voltage (V_{out}).
3. Find the input-referred DC offset voltage (V_{offset}) which drives the output voltage to mid-rail voltage.
4. Compute the differential-mode DC voltage gain curve by taking derivative of the VTC with respect to V_{id}.
5. At $V_{ic} = V_{DD}/2$ and $V_{id} = V_{offset}$, obtain the following values:
    a. DC differential-mode voltage gain (A_0)
    b. DC common-mode voltage gain(A_{cm0})
    c. Bias current into both the input terminals|($I_{bias,in1}$ and $I_{bias,in2}$)
    d. Bias current ($I_{bias} = (I_{bias,in1} + I_{bias,in2})/2$)
    e. Offset current ($I_{offset} = | I_{bias,in1} - I_{bias,in2} |$)
    f. Positive and negative output saturation limits (V^- to V^+)
    g. Power dissipation ($P_{diss} = V_{DD} * I_{DD}$)

Schematic:

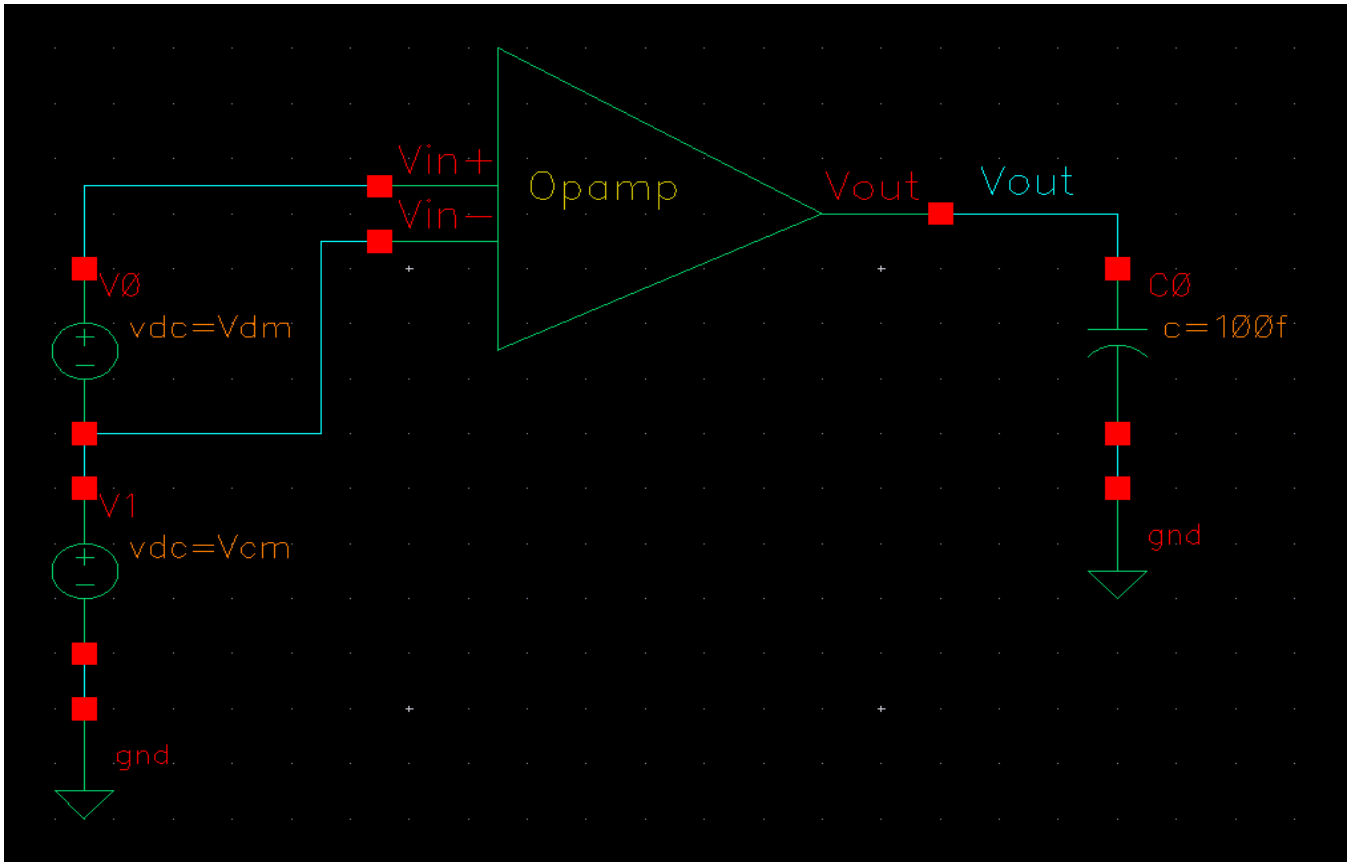

1):ICMR and OCMR:

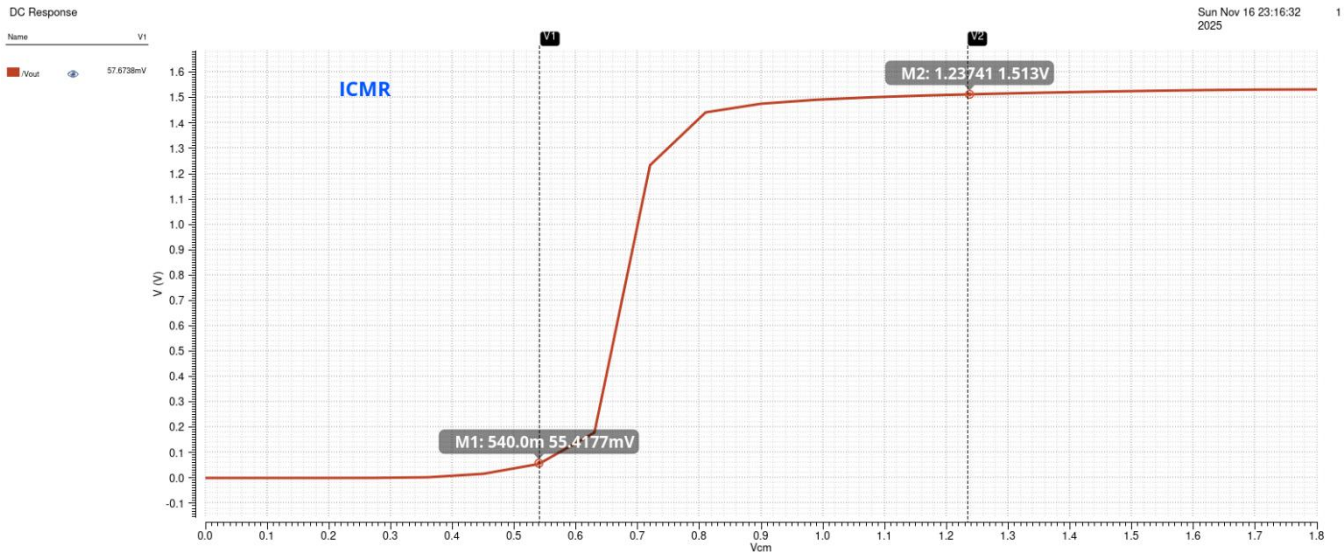

ICMR: 540mV to 1.23V

OCMR: 55.42mV to 1.513V

2):VTC Curve:

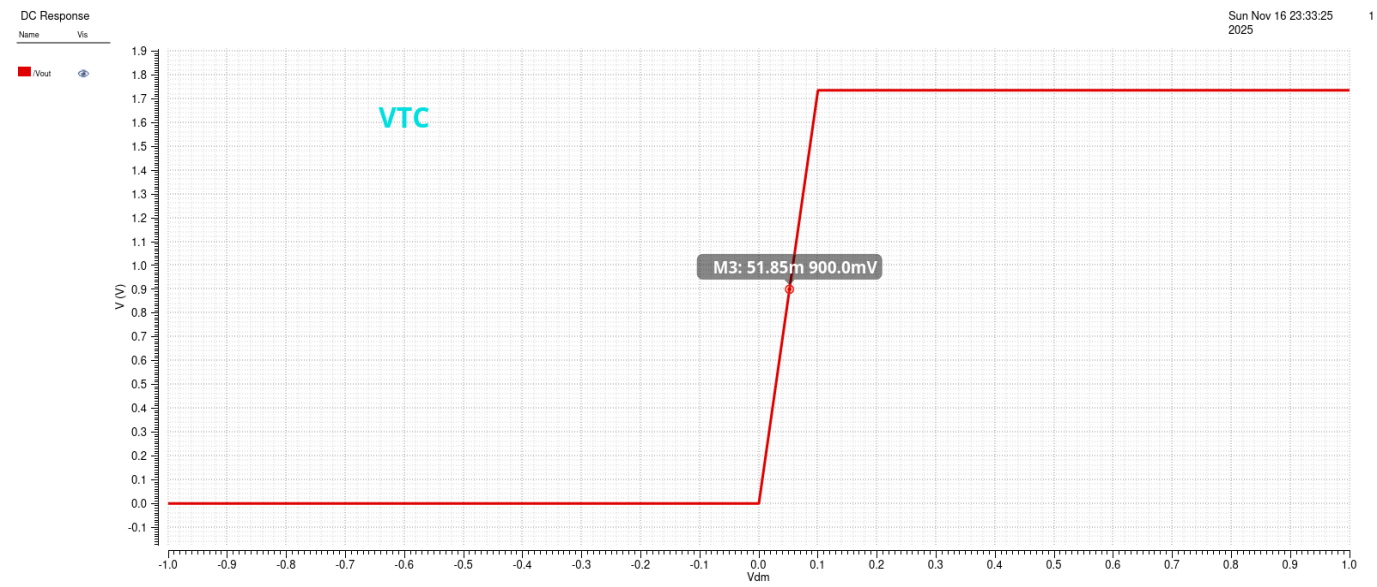

3):Input-referred DC offset voltage (Voffset) =51.85mV

4):Differential-mode DC voltage gain curve:

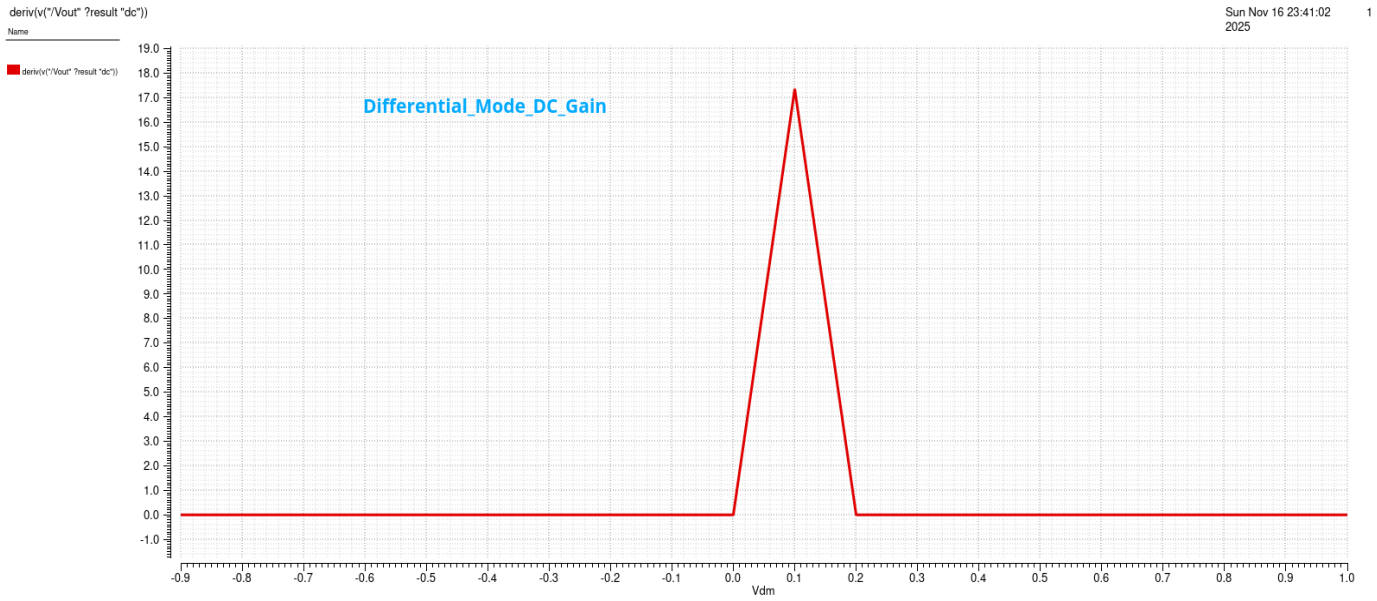

5):

a) DC differential-mode voltage gain ($A0$) =14.77
b) DC common-mode voltage gain($Acm0$) =9.4172
c) Bias current into both the input terminals ($Ibias,in1$ and $Ibias,in2$) =0
d) Bias current ($Ibias = (Ibias,in1 + Ibias,in2)/2$) =0
e) Offset current ($Ioffset = | Ibias,in1 - Ibias,in2 |$) =0
f) Positive and negative output saturation limits ($V-$ to $V+$)
V+ = 100mV
V- = -100mV
g) Power dissipation ($Pdiss = VDD * IDD$) =14.44µW

==========

AC analysis

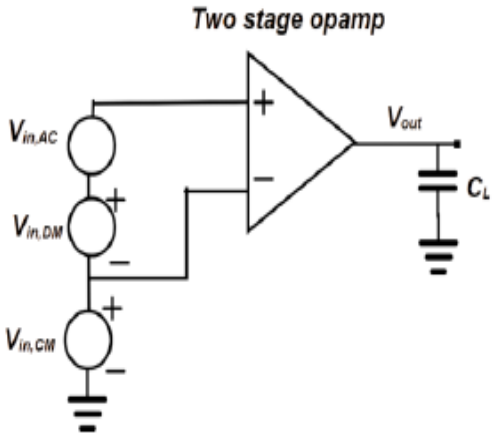

Set the DC condition for DC analysis (3) i.e. output voltage to mid-rail. Set the $V_{in,CM}$ to mid rail. Add another AC source Vin,AC in series with the differential input $V_{in,DC}$.

1. Obtain the frequency response by plotting magnitude and phase of the differential-mode voltage gain versus frequency from 1*Hz* to 10 *GHz* with 100 points/decade step size.
2. Find the 0 dB magnitude crossover frequency (f_{0dB})
3. Find the phase at f_{0dB}($Phase_{f_{0dB}}$)
4. Calculate the phase margin in degree ($PM = 180 + Phase_{f_{0dB}}$)

Schematic:

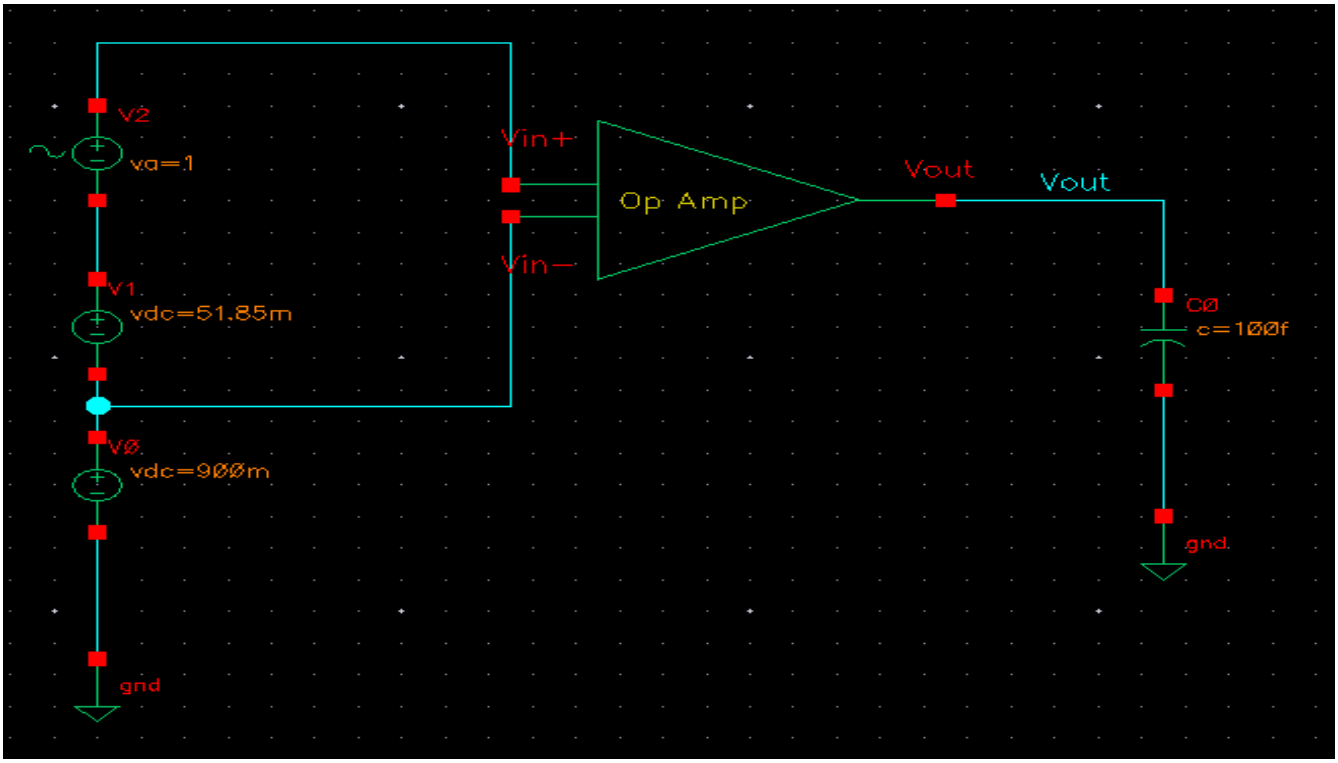

1):Differential mode Voltage gain plot:

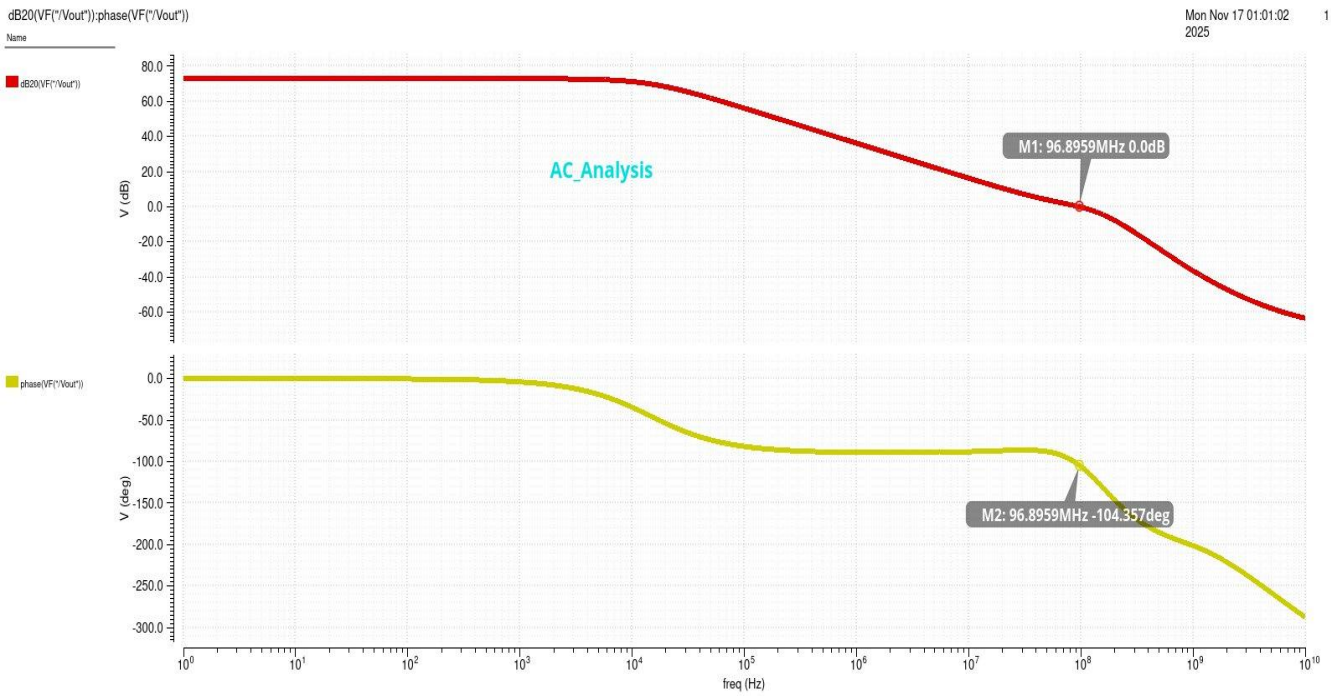

2): 0 dB magnitude crossover frequency ($f0dB$)

96.8959 MHz.

3): Phase at f_{0dB} ($Phase\ f_{0dB}$)

-104.357°

4): Phase margin in degree ($PM = 180 + Phase\ f_{0dB}$)

Phase Margin = 75.643°

==========

Stability analysis

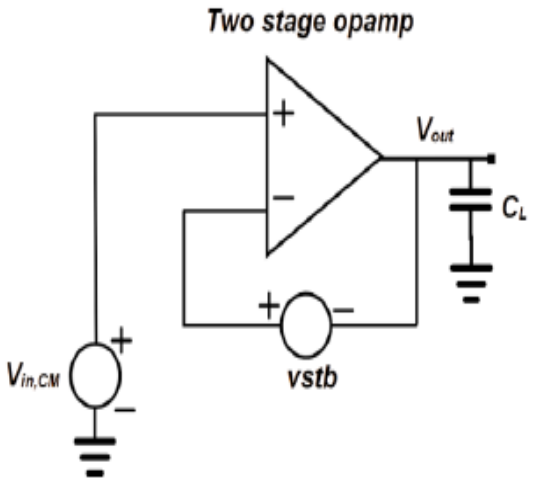

Connect the op-amp in the voltage follower configuration (unity gain feedback) and set the common mode voltage to mid-rail. Use vstb to break the loop in stb analysis as shown in the class.

1. Plot open loop gain and phase
2. Calculate gain and phase margins.

Schematic:

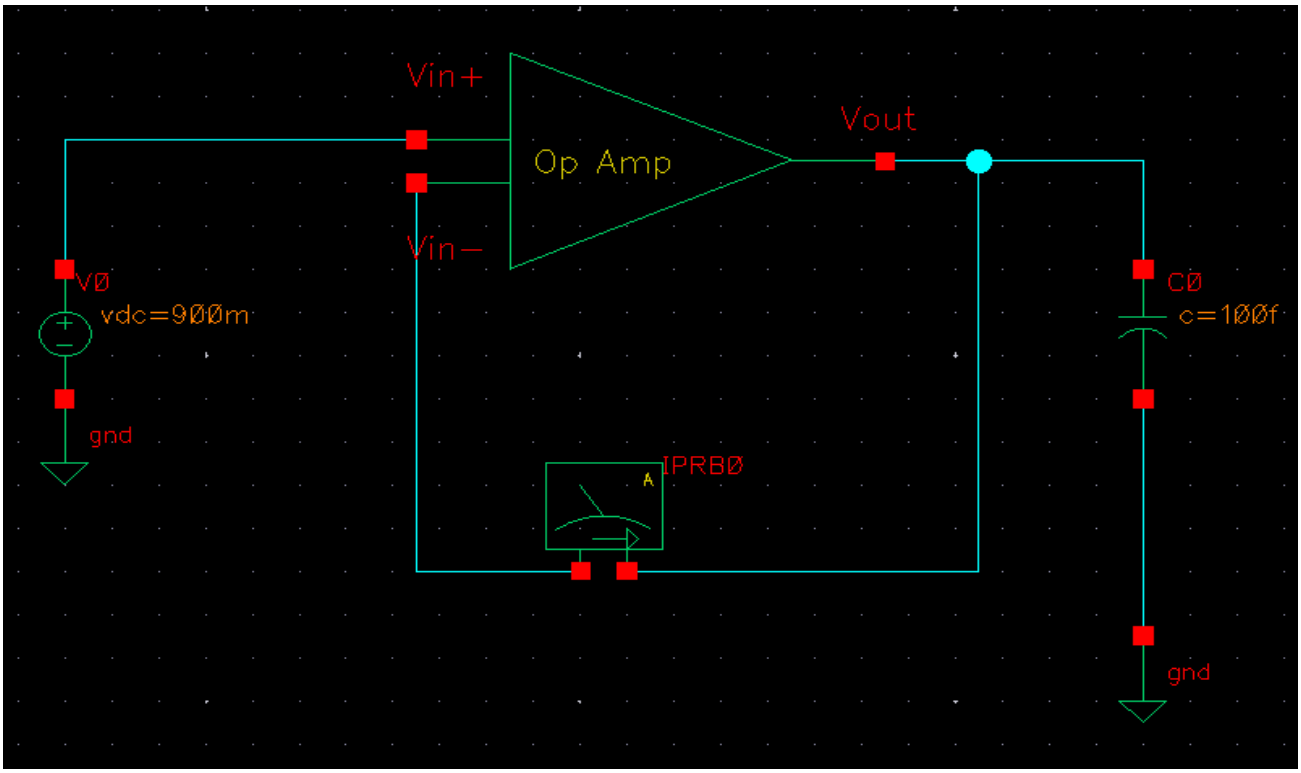

1): Open Loop Gain and Phase Plot:

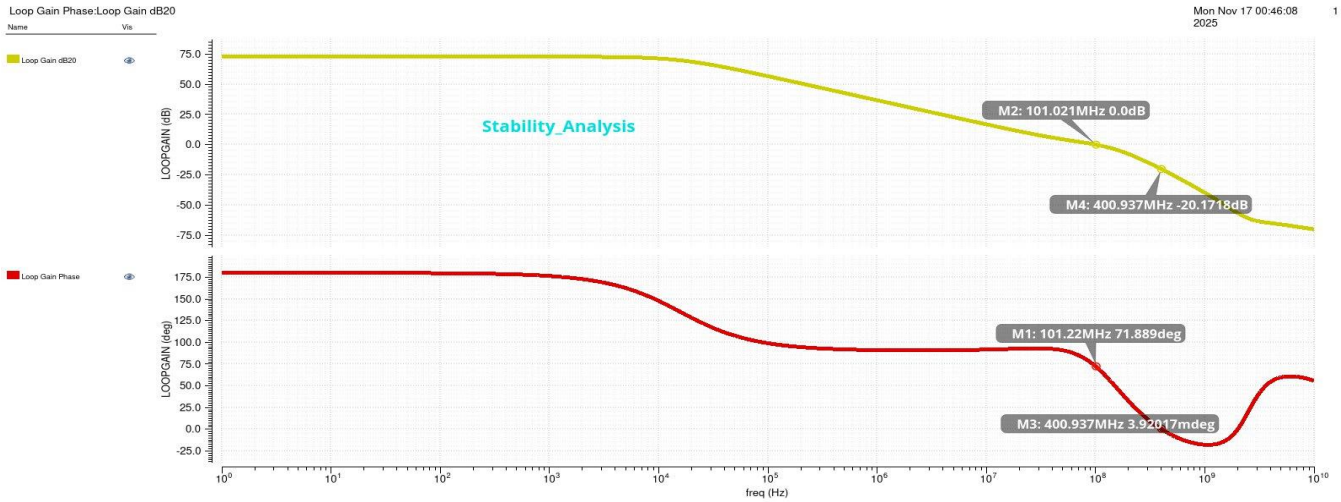

2):

Gain Crossover Frequency = 400.937 MHz

Phase Crossover Frequency= 101.022 MHz

Gain Margin= 20.1728 dB

Phase Margin= 72º

==========

Transient analysis

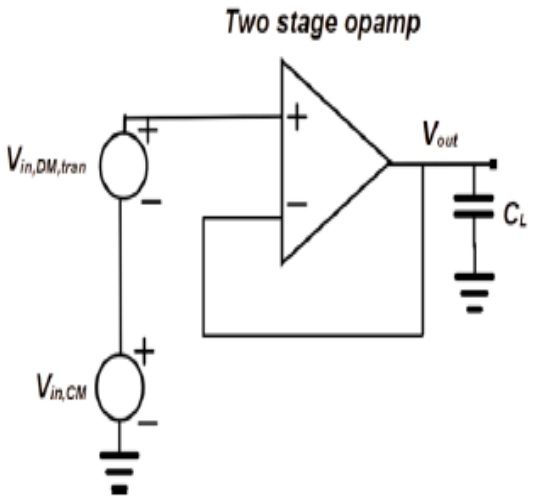

1. Connect the op-amp in the voltage follower configuration (unity gain feedback) and set the common mode voltage to mid-rail. Excite the input (non-invertingterminal) with a (positive and negative) step signal with large (~ V_{DD}./2) amplitude.
2. Find the positive and negative slew rate (slope of the output V/s) from the transient response.

Schematic:

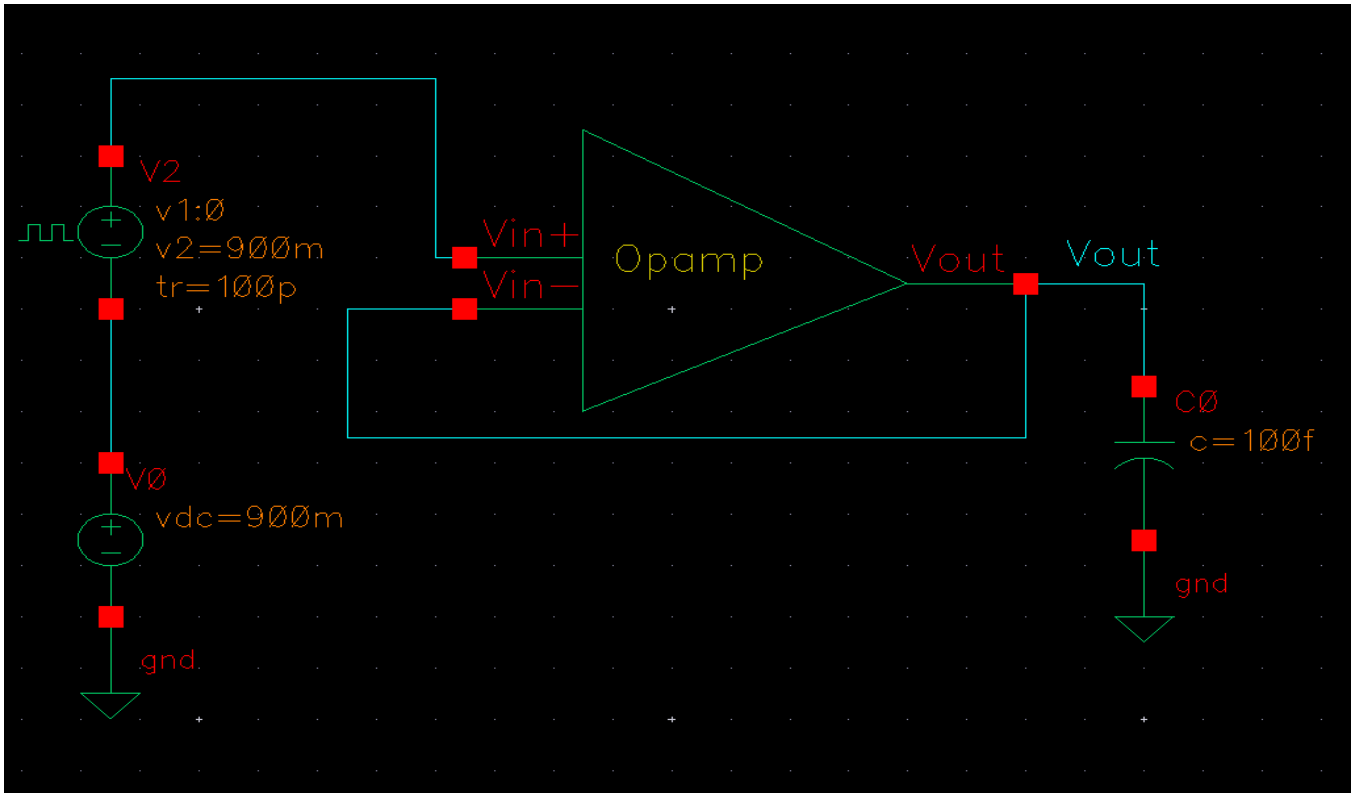

2):

Positive slew rate=46.62 V/µsec

Neagtive slew rate=51.12 V/µsec

==========