ENGINEERING MECHANICS

STATICS AND DYNAMICS

(MU 2017)

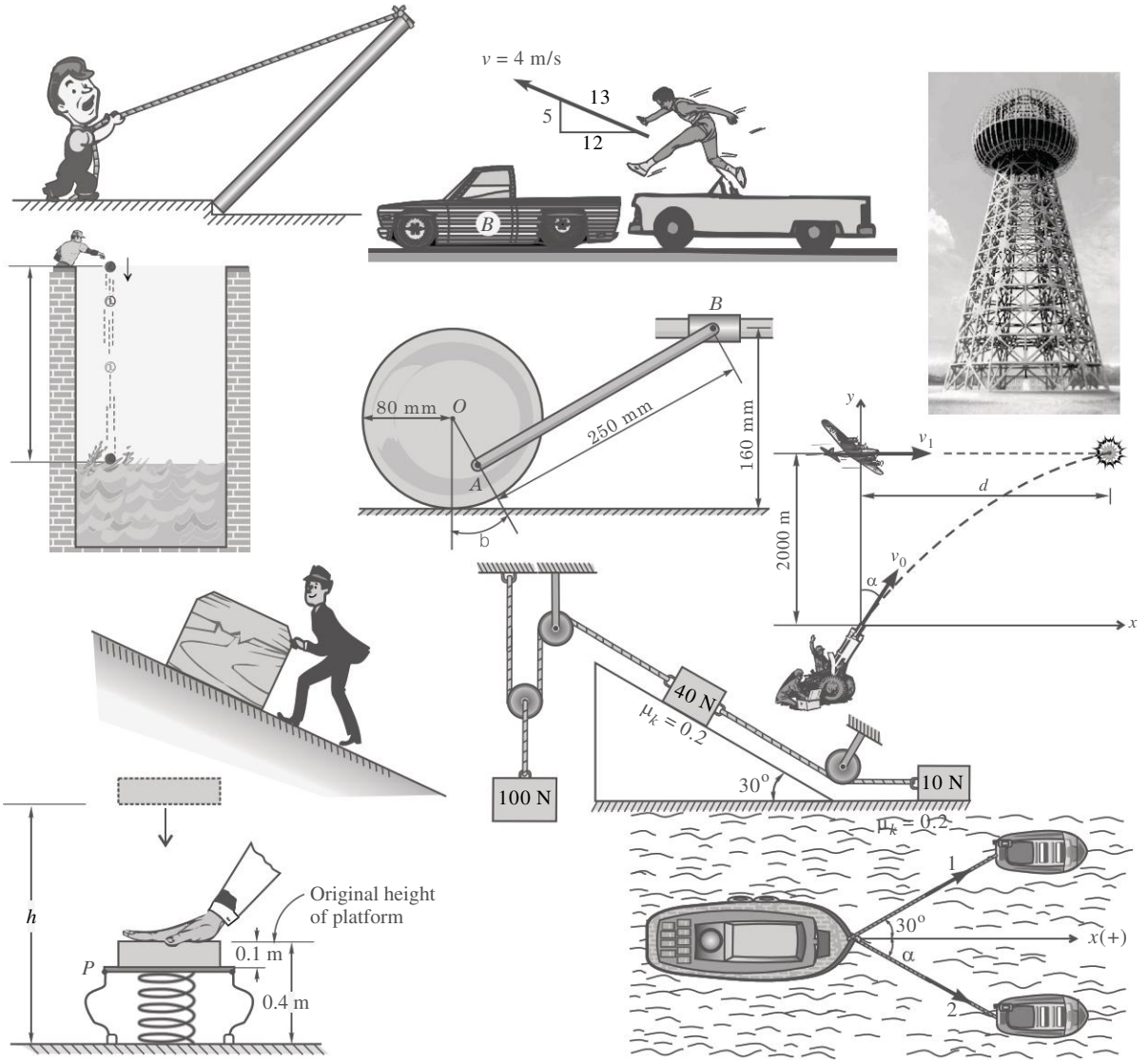

ABOUT THE AUTHOR

Prof. N H Dubey is currently associated with JKB Engineering Institute and a Visiting Professor at various Colleges of Engineering, Mumbai. He obtained his bachelor's degree in Production Engineering and postgraduate in Advertising and Public Relations. He has honed his computer skills at the Garware Institute. He has an industrial experience of one year with Premier Automobile Ltd. As of today, he has more than 27 years of teaching experience and is also associated with the Indian Society for Technical Education, New Delhi.

He is also the author of the following textbooks:

1. Engineering Drawing (Degree)

2. Machine Drawing (Solid Geometry)

3. Engineering Drawing (Diploma)

4. Computer Aided Engineering Drawing

5. Engineering Graphics

6. Technical Drawing Application

7. Question Bank in Engineering Drawing

His text are widely acknowledged by the teachers as well as student community alike.

Numerous students who have studied under his able guidance have not only topped their respective college exams but also achieved enviable position in Industry.

ENGINEERING MECHANICS

STATICS AND DYNAMICS

(MU 2017)

N H Dubey

Professor
JKB Engineering Institute
Mumbai

McGraw Hill Education (India) Private Limited
CHENNAI

McGraw Hill Education Offices

Chennai New York St Louis San Francisco Auckland Bogotá Caracas
Kuala Lumpur Lisbon London Madrid Mexico City Milan Montreal
San Juan Santiago Singapore Sydney Tokyo Toronto

McGraw Hill Education (India) Private Limited

Published by the McGraw Hill Education (India) Private Limited,
444/1, Sri Ekambara Naicker Industrial Estate, Alapakkam, Porur, Chennai 600 116

Engineering Mechanics: Statics and Dynamics

Copyright © 2017, by McGraw Hill Education (India) Limited.
No part of this publication may be reproduced or distributed in any form or by any means, electronic, mechanical, photocopying, recording, or otherwise or stored in a database or retrieval system without the prior written permission of the publishers. The program listing (if any) may be entered, stored and executed in a computer system, but they may not be reproduced for publication.

This edition can be exported from India only by the publishers,
McGraw Hill Education (India) Private Limited.

ISBN (13): 978-93-5260-341-1
ISBN (10): 93-5260-341-9

Managing Director: *Kaushik Bellani*

Director—Products (Higher Education and Professional): *Vibha Mahajan*

Manager—Product Development: *Koyel Ghosh*
Specialist—Product Development: *Sachin Kumar*

Head—Production (Higher Education and Professional): *Satinder S Baveja*
Senior Copy Editor: *Taranpreet Kaur*

Assistant General Manager—Product Management: *Shalini Jha*
Manager—Product Management: *Ritwick Dutta*

General Manager—Producation: *Rajender P Ghansela*
Production Manager: *Reji Kumar*

Information contained in this work has been obtained by McGraw Hill Education (India), from sources believed to be reliable. However, neither McGraw Hill Education (India) nor its authors guarantee the accuracy or completeness of any information published herein, and neither McGraw Hill Education (India) nor its authors shall be responsible for any errors, omissions, or damages arising out of use of this information. This work is published with the understanding that McGraw Hill Education (India) and its authors are supplying information but are not attempting to render engineering or other professional services. If such services are required, the assistance of an appropriate professional should be sought.

Visit us at: www.mheducation.co.in

✦ तू ही निरंकार ✦

This book is dedicated to

Sadguru Mata Savinder Hardev ji Maharaj
of Sant Nirankari Mission
and
My Loving Parents
Late Shri. Hansraj M. Dubey
and
Late Smt. Kamaladevi H. Dubey

CONTENT

Preface xv
Acknowledgment xvi
Roadmap to the Syllabus xvii

1. INTRODUCTION TO MECHANICS ..... *1.1 - 1.45*

1.1 Introduction 1.2
1.2 Application of Engineering Mechanics 1.2
1.3 Classification of Mechanics 1.5
1.4 Basic Concepts 1.6
1.5 Assumptions for Mechanics 1.6
1.6 Laws of Mechanics (Fundamental Principles) 1.8
1.7 Concept of Force 1.9
1.8 Classification of Force System 1.11
1.9 Composition of Forces 1.13
Solved Problems on Composition of Forces by Parallelogram and Triangle Law 1.14
1.10 Resolution of Force 1.16
Solved Problems on Resolution of Force into Oblique Components of Force 1.16
1.10.1 Resolution of Force into Rectangular Components of Force 1.18
Solved Problems on Resolution of Force into Rectangular Components 1.22
1.11 Moment of Force 1.25
Solved Problems on Moment of Force 1.26
1.12 Couple 1.30
1.13 Transfer of Force to the Parallel Position 1.34
Solved Problems on Transfer of Force to Parallel Position 1.35
1.14 SI Units Used in Mechanics 1.37
Summary 1.38
Problems 1.41
Review Questions 1.44
Fill in the Blanks 1.44
Multiple-choice Questions 1.45

2. RESULTANT OF SYSTEM OF COPLANAR FORCES ..... *2.1 - 2.43*

2.1 Introduction 2.2
2.2 Resultant of Concurrent Force System Using Method of Resolution 2.2
Solved Problems 2.3
2.3 Varignon's Theorem 2.17
2.4 Resultant of Parallel Force System 2.18
Solved Problems 2.19
2.5 Resultant of General Force System 2.24
Solved Problems 2.27

Summary 2.35
Problems 2.37
Review Questions 2.42
Fill in the Blanks 2.42
Multiple-choice Questions 2.42

3. EQUILIBRIUM OF SYSTEM OF COPLANAR FORCES ..... *3.1 - 3.66*

3.1 Introduction 3.2
3.2 Equilibrant 3.2
3.3 Types of Equilibria 3.2
3.4 Conditions of Equilibrium for Various Force System 3.3
3.5 Free Body Diagram (F.B.D.) 3.5
3.6 Types of Supports 3.8
3.7 Equilibrium of Two-Force System 3.13
3.8 Equilibrium of Three-Force System 3.14
3.9 Three-Force Triangle Theorem 3.15
3.10 Lami's Theorem 3.16
Solved Problems on Lami's Theorem 3.17
3.11 Types of Beams 3.39
3.12 Types of Load 3.41
Solved Problems on Support Reactions of Beams 3.44
Summary 3.49
Problems 3.52
Review Questions 3.65
Fill in the Blanks 3.65
Multiple-choice Questions 3.65

4. FORCES IN SPACE ..... *4.1 - 4.40*

4.1 Introduction 4.2
4.2 Vector 4.2
Solved Problems on Moment of a Force 4.5
4.3 Resultant of a Concurrent Force System in Space 4.14
4.4 Resultant of a Parallel Force System in Space 4.18
Solved Problems on a Parallel Force System in Space 4.19
4.5 Resultant of a General Force System in Space 4.25
Solved Problems on a General Force System in Space 4.25
Summary 4.31
Problems 4.34
Review Questions 4.39
Fill in the Blanks 4.40
Multiple-choice Questions 4.40

5. CENTRE OF GRAVITY ..... *5.1 - 5.26*

5.1 Introduction 5.2
5.2 Centre of Gravity 5.2
5.2.1 Centre of Gravity of a Flat Plate 5.3
Solved Problems on C.G. 5.7
Summary 5.21
Problems 5.22
Review Questions 5.25
Fill in the Blanks 5.26
Multiple-choice Questions 5.26

6. TRUSSES ..... *7.1 - 7.23*

6.1 Introduction 6.2
6.2 Types of Trusses 6.3
6.2.1 Perfect Truss 6.4
6.2.2 Imperfect Truss 6.5
6.3 Two Force Member Concept 6.6
6.4 Method of Joints 6.6
Solved Problems on Method of Joints 6.10
6.5 Method of Sections (Method of Moments) 6.16
Solved Problems on Method of Sections 6.17
Summary 6.19
Problems 6.20
Review Questions 6.22
Fill in the Blanks 6.23
Multiple-choice Questions 6.23

7. FRICTION ..... *7.1 - 7.47*

7.1 Introduction 7.2
7.2 Types of Friction 7.2
7.3 Mechanism of Friction 7.3
7.4 Laws of Friction 7.4
7.5 Types of Friction Problems 7.5
7.6 Applications of Friction 7.6
Solved Problems - Body Placed on Horizontal Plane 7.6
Summary 7.36
Problems 7.37
Review Questions 7.47
Fill in the Blanks 7.47
Multiple-choice Questions 7.47

8. PRINCIPLE OF VIRTUAL WORK ..... *8.1 - 8.36*

8.1 Introduction 8.2
8.2 Work Done By Force 8.2
8.2.1 Work Done By Couple 8.2
8.2.2 Unit Of Work 8.3
8.3 Virtual Work 8.3
Procedure to Solve a Problem by Coordinate Method 8.4
Solved Problems 8.5
Summary 8.28
Problems 8.29
Review Questions 8.36
Fill in the Blanks 8.36
Multiple-choice Questions 8.36

9. INTRODUCTION TO DYNAMICS ..... *9.1 - 9.4*

9.1 Revision of Mechanics 9.2
9.2 Motion 9.2
9.2.1 Translation 9.3
9.2.2 Rotation 9.3
9.2.3 General Plane Motion 9.4
9.2.4 Analysis of Dynamics 9.4

10. KINEMATICS OF PARTICLES - I ..... *10.1 - 10.82*
[RECTILINEAR MOTION]

10.1 Rectilinear Motion 10.2
10.2 Equations of Motion 10.4
10.3 Sign Convention 10.6
10.4 Motion Curves 10.7
10.4.1 Important Relations of Motion Curve 10.9
Solved Problems Based [Rectilinear Motion with Uniform (Constant) Acceleration and Uniform (Constant) Velocity] 10.10
Solved Problems Based on Rectilinear Motion Under Gravity 10.22
Solved Problems Based on Rectilinear Motion with Variable Acceleration 10.35
Solved Problems Based on Motion Diagram (Graphical Solution) 10.58
Summary 10.72
Problems 10.73
Review Questions 10.81
Fill in the Blanks 10.82
Multiple-choice Questions 10.82

11. KINEMATICS OF PARTICLES - II ..... *11.1 - 11.63*
[CURVILINEAR MOTION]

11.1 Curvilinear Motion 11.2
Solved Problems Based on Curvilinear Motion 11.8
11.2 Projectile Motion 11.21
Solved Problems Based on Projectile Motion 11.24
11.3 Relative Motion 11.42
11.3.1 Relative Motion Between Two Particles 11.42
Solved Problems Based on Relative Motion 11.43
Summary 11.51
Problems 11.52
Review Questions 11.62
Fill in the Blanks 11.62
Multiple-choice Questions 11.62

12. KINEMATICS OF RIGID BODIES ..... *12.1 - 12.51*

12.1 Introduction 12.2
12.2 Types of Motion 12.2
12.2.1 Translation Motion 12.2
12.2.2 Fixed Axis Rotational Motion 12.3
12.3 Relationship Between Rope, Pulley and Block 12.6
12.4 Relationship Between Two Contact Pulleys Rotating without Slipping 12.6
12.5 General Plane Motion 12.7
12.5.1 Link Mechanism 12.8
12.5.2 Rolling of a Body Without Slipping 12.8
12.5.3 How to Locate the ICR 12.8
Solved Problems 12.10
Summary 12.42
Problems 12.43
Review Questions 12.51
Fill in the Blanks 12.51
Multiple-choice Questions 12.51

13. KINETICS OF PARTICLES I ..... *13.1 - 13.54*
[NEWTON'S SECOND LAW/D'ALEMBERTS' PRINCIPLE]

13.1 Introduction to Kinetics 13.2
13.2 Newton's Second Law of Motion 13.2
13.3 D'Alemberts' Principle (Dynamic Equilibrium) 13.4
Solved Problems Based on Rectilinear Motion 13.5

Solved Problems Based on Curvilinear Motion 13.37
Summary 13.48
Problems 13.49
Review Questions 13.54
Fill in the Blanks 13.54
Multiple-choice Questions 13.54

14. KINETICS OF PARTICLES II ***..... 14.1 - 14.42***
[WORK - ENERGY PRINCIPLE]

14.1 Introduction 14.2
14.2 Work Done by a Force 14.2
14.3 Work Done by Weight Force 14.3
14.4 Work Done by Frictional Force 14.3
14.5 Work Done by Spring Force 14.3
14.6 Work - Energy Principle 14.4
Solved Problems 14.6
Summary 14.32
Problems 14.33
Review Questions 14.42
Fill in the Blanks 14.42
Multiple-choice Questions 14.42

15. KINETICS OF PARTICLES III ***..... 15.1 - 15.49***
[IMPULSE - MOMENTUM PRINCIPLE AND IMPACT]

15.1 Introduction 15.2
15.2 Principle of Impulse and Momentum 15.2
15.3 Principle of Conservation Momentum 15.3
15.4 Impact 15.3
15.5 Coefficient of Restitution (e) 15.5
15.5.1 Classification of Impact Based on Coefficient of Restitution 15.6
Solved Problems Based on Impact 15.7
Solved Problems Based on Impulse and Momentum 15.34
Summary 15.41
Problems 15.42
Review Questions 15.49
Fill in the Blanks 15.49
Multiple-choice Questions 15.49

APPENDIX - IMPORTANT FORMULAE AND RESULTS ..... *A.1 - A.7*
ANSWER TO OBJECTIVE TYPE QUESTIONS ..... *A.8 - A.10*
MUMBAI UNIVERSITY PAPER SOLUTIONS ..... *UPS.1 - UPS.93*
REFERENCE BOOKS *R.1*

PREFACE

Engineering Mechanics is the branch of Physics which deals with the study of effect of force system acting on a particle or a rigid body which may be at rest or in motion.

Engineering Mechanics is considered one of the basic subjects for engineering students irrespective of the branches. It develop thinking skills, analytical ability and imaginative skills of the student.

Engineering Mechanics is the basic subject which supports many other subjects like Strength of Material, Theory of Machine, Kinetics of Machine, Dynamics of Machine, Fluid Mechanics, Fluid Machine, Machine Design, Tool Design, etc., to apply the engineering concept for manufacturing of various products and projects such as automobile, aircrafts, electric motors, robots, construction of roadways, railways, bridges, dams, power transmission towers, projectile of missiles, satellites and many more.

Many years of teaching experience and interaction with the students has given me a clear picture to understand the difficulties faced by the students. I have made a dedicated attempt while writing this book to overcome all such types of problems. A sincere effort has been made to develop an interest within the students and to motivate and develop analytical ability. The content of the book is presented very clearly and systematically.

ABOUT THE BOOK

This book caters to the need of first-year engineering students desiring to achieve a firm footage in the subject of Engineering Mechanics. It aims to support the learning of Statics and Dynamics with theoretical material, applications and a sufficient number of solved problems which have been selected from examination question papers and set in a sequential order. This text is a sincere attempt to make the subject simple and easy to understand.

Features

- NEW! Solution of MU examination question papers from 2012 to 2015 tagged within the content
- NEW! Strict adherence to the latest syllabus of University of Mumbai (2016 Regulation)
- NEW! Essential topics such as *Non Concurrent Non Parallel system of forces, Distributed Forces in plane, Forces in Space, Principle of Virtual Work* explained in detail
- Jargon-free theoretical concepts appended with practical applications
- Inclusion of plentiful illustrations including *free body diagrams*
- Student-friendly chapter design including Learning Objectives, Introduction, Section-end Solved Examples, Chapter-end Summary, Numerical Problems, Review Questions, Fill in the Blanks and Multiple Choice Questions
- Exam-oriented pedagogy which is similar to examinations of various universities:
  - Illustrations: 950
  - Solved Problems: 448
  - Exercise Problems: 455
  - Review Questions: 81
  - Fill In the Blanks: 79
  - Multiple Choice Questions: 95 (30+ NEW!)

ACKNOWLEDGEMENT

I am thankful to my colleagues and many other friends who have directly/indirectly helped me in preparing this book. I specially thank my friend, Prof. Manoj Jadhav for the valuable subject interaction.

A sincere thanks to all my engineering students for their co-operation, which has strengthen my passion in teaching for the last twenty four years.

I owe a sincere thanks to McGraw Hill Education (India), for taking deep interest and producing this book in the best possible form.

I am grateful to my wife, Sangeeta, and my sons, Anand and Vishwas, for constant support and cheerful ambience. I acknowledge my deep gratitude to all the members of Dubey family for their warm encouragement.

I express my gratitude to village Manikpur, near Varanasi, that has cradled me in its love and imbibed willpower and passion in me.

FEEDBACK

Constructive suggestions and comments for improvement of the book are most welcome and will be appreciated. The readers can reach at **profnhdubey@yahoo.com, profnhdubey67@gmail.com** for their valuable feedback. Your valuable comments will be greatly acknowledged.

N H Dubey

PUBLISHER'S NOTE

Constructive suggestions and criticism always go a long way in enhancing any endeavour. We request all our readers to email us their valuable comments/views/feedback for the betterment of the book at **info.india@mheducation.com** mentioning the title and author name in the subject line.

Also, please feel free to report any piracy of the book spotted by you.

ROADMAP TO THE SYLLABUS

As per the Latest Revised Syllabus of University of Mumbai

ENGINEERING MECHANICS

(Sub. Code FEC104)

(Common for All Branches of Engineering)

(As per Choice Based Credit and Grading System with Effect from the A. Y. 2016–17)

STATICS

[1]	1.1	System of Coplanar Forces : Resultant of Concurrent Forces, Parallel forces, Non-concurrent Non-parallel System of Forces, Moment of Force About a Point, Couples, Varignon's Theorem. Force Couple System. Distributed Forces in Plane.
	1.2	Centroid for Plane Laminas.

GOTO - Chapters 1, 2 and 5

[2]	2.1	Equilibrium of System of Coplanar Forces : Condition of Equilibrium for Concurrent Forces, Parallel Forces and Non-concurrent Non-parallel General Forces and Couples.
	2.2	Types of Support : Loads, Beams, Determination of Reactions at Supports for Various Types of Loads on Beams.(Excluding problems on internal hinges)
	2.3	Analysis of Plane Trusses : By Using Method of Joints and Method of Sections. (Excluding pin jointed frames)

GOTO - Chapter 2, 3 and 6

[3]	3.1	Forces in Space : Resultant of Non-coplanar Force Systems : Resultant of Concurrent Force System, Parallel Force System and Non-concurrent Non-parallel Force System. Equilibrium of Non-coplanar Force Systems: Equilibrium of Concurrent Force System, Parallel Force System and Non-concurrent Non-parallel Force System.
	3.2	Friction : Introduction to Laws of Friction, Cone of Friction, Equilibrium of Bodies on Inclined Plane, Application to Problems Involving Wedges, Ladders.
	3.3	Principle of Virtual Work : Applications on Equilibrium Mechanisms, Pin Jointed Frames.

GOTO - Chapter 4, 7 and 8

DYNAMICS

[4] 4.1 Kinematics of a Particle : Rectilinear Motion, Velocity and Acceleration in Terms of Rectangular Co-ordinate System, Motion Along Plane Curved Path, Tangential and Normal Component of Acceleration, Motion Curves (a-t, v-t, s-t Curves), Projectile Motion.

GOTO - Chapter 10 and 11

[5] 5.1 Kinematics of a Rigid Body : Introduction to General Plane Motion, Instantaneous Center of Rotation for the Velocity, Velocity Diagrams for Bodies in Plane Motion.

GOTO - Chapters 12

[6] 6.1 Kinetics of a Particle : Force and Acceleration : Introduction to Basic Concepts, D'Alemberts Principle, Equations of Dynamic Equilibrium, Newton's Second Law of Motion.

6.2 Kinetics of a Particle : Work and Energy : Principle of Work and Energy, Law of Conservation of Energy.

6.3 Kinetics of a Particle : Impulse and Momentum : Principle of Linear Impulse and Momentum. Law of Conservation of Momentum. Impact and Collision.

GOTO - Chapters 13, 14 and 15

CHAPTER

1

INTRODUCTION TO MECHANICS

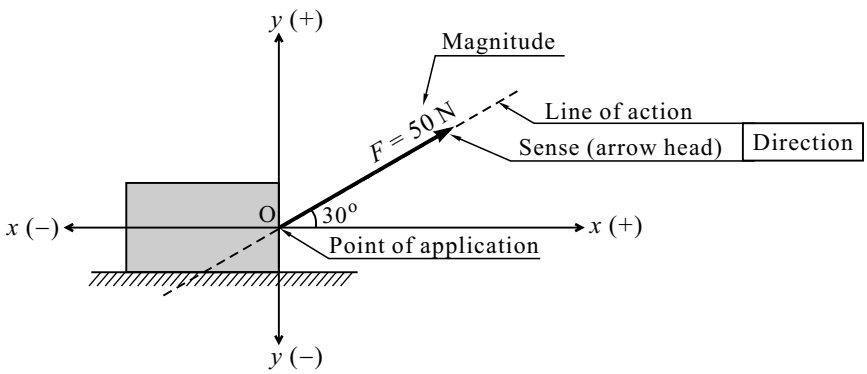

Learning Objectives

After reading this chapter, you will be able to answer the following questions:

- *What is mechanics?*
- *What is meant by statics and dynamics?*
- *What are the fundamental principles of Newton?*
- *How do you define force? What are its effects?*
- *What do you mean by force system?*
- *How do you resolve a force?*
- *What do you mean by moment of force?*
- *What is a couple?*
- *Why is a couple free vector?*
- *How can force be shifted to a parallel new position?*

1.1 INTRODUCTION

- **Science :** It is *the knowledge about the structure and behaviour of natural and physical world based on facts that one can prove. Science is the study of living and non-living things*. There are various branches of science such as Natural science, Domestic science, Earth science, Life science, Political science, Social science, etc. Physics, Chemistry, Mathematics, Biology, etc., are a few sub-branches of science.
- **Physics :** It is *a sub-branch of science which studies the property of matter and energy.* The field of Physics deals with the study of mechanics, thermodynamics, electricity, magnetism, sound, light, nuclear physics, electronics, etc.
- **Mechanics :** It is *the branch of physics which deals with the study of effect of force system acting on a particle or a rigid body which may be at rest or in motion.* The purpose of mechanics is to explain and predict physical phenomena and thus to lay the foundation for engineering application.

1.2 APPLICATIONS OF ENGINEERING MECHANICS

- **Engineering Mechanics :** It is considered as one of the basic subjects for engineering students, irrespective of branches, as it develops the thinking and imaginative skill of students. It supports many other subjects in manufacturing of various products and projects. Some of the applications of engineering mechanics are shown in Figs.1.2-i and ii.
- **Engineering :** *It is the application of scientific knowledge which is used by an engineer to design and manufacture the products that serve the human society*.

  Apart from Gods gifted nature, humans have produced many artificial goods which range from a small pin to a huge multi-storey building. The main role of an engineer is to apply the engineering concepts for manufacturing various products and in undertaking projects such as automobiles, aircrafts, electric motors, robots, television, mobile, satellite, construction of roadways, railways, bridges, dams, power transmission towers, skyscrapers, projectile of missiles, launching of rockets, radar communication structure, trusses, lifting machines like cranes, hoists, screw jacks, elevators, conveyor belts, cargo ships, submarines, etc. Figure 1.2-i illustrates some important applications and products of engineering mechanics.

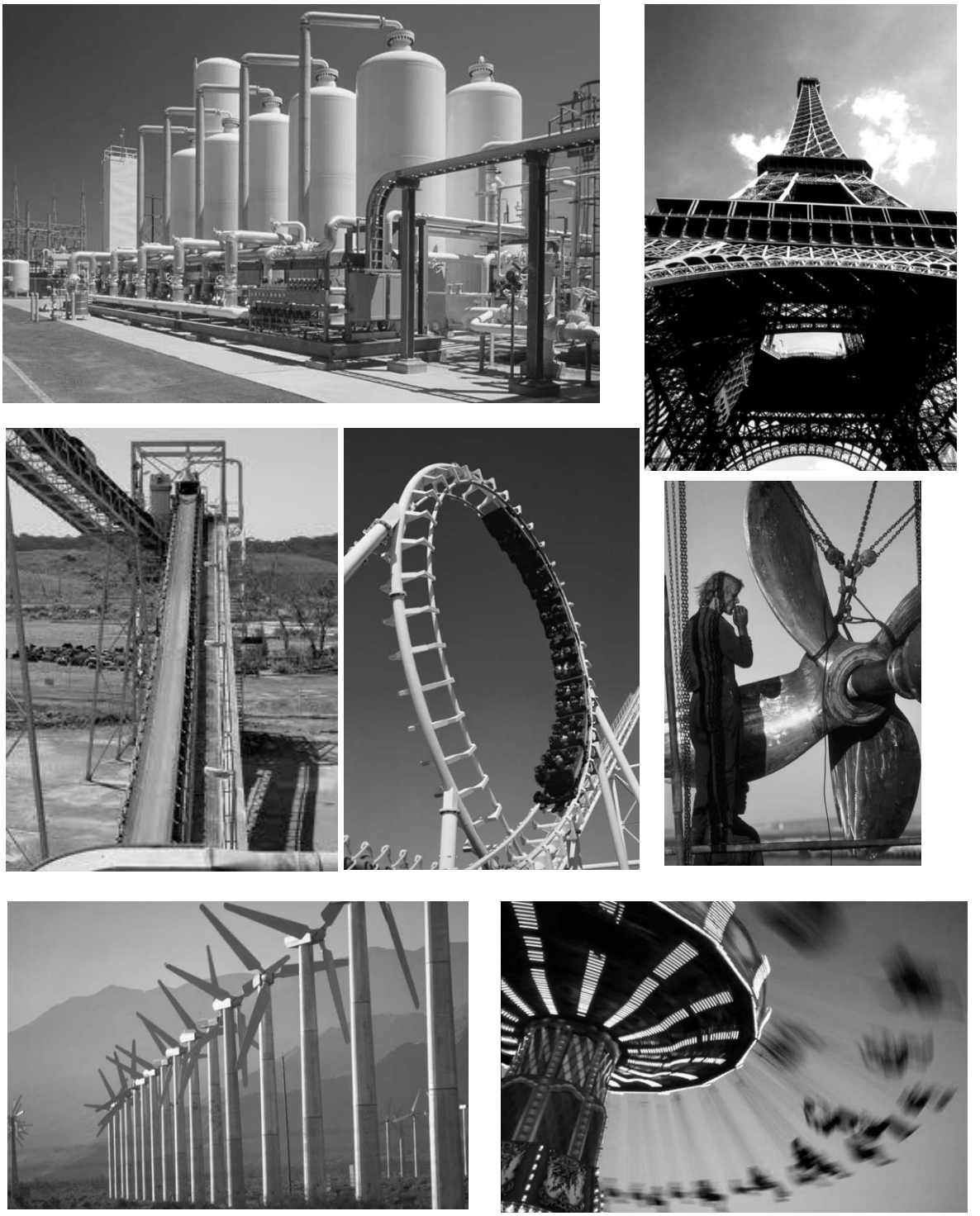

Fig. 1.2-i : Various Applications of Engineering Mechanics

Fig. 1.2-ii : Various Applications of Engineering Mechanics

1.3 CLASSIFICATION OF MECHANICS

Mechanics can be broadly classified into mechanics of rigid bodies and that of non-rigid (deformable bodies).

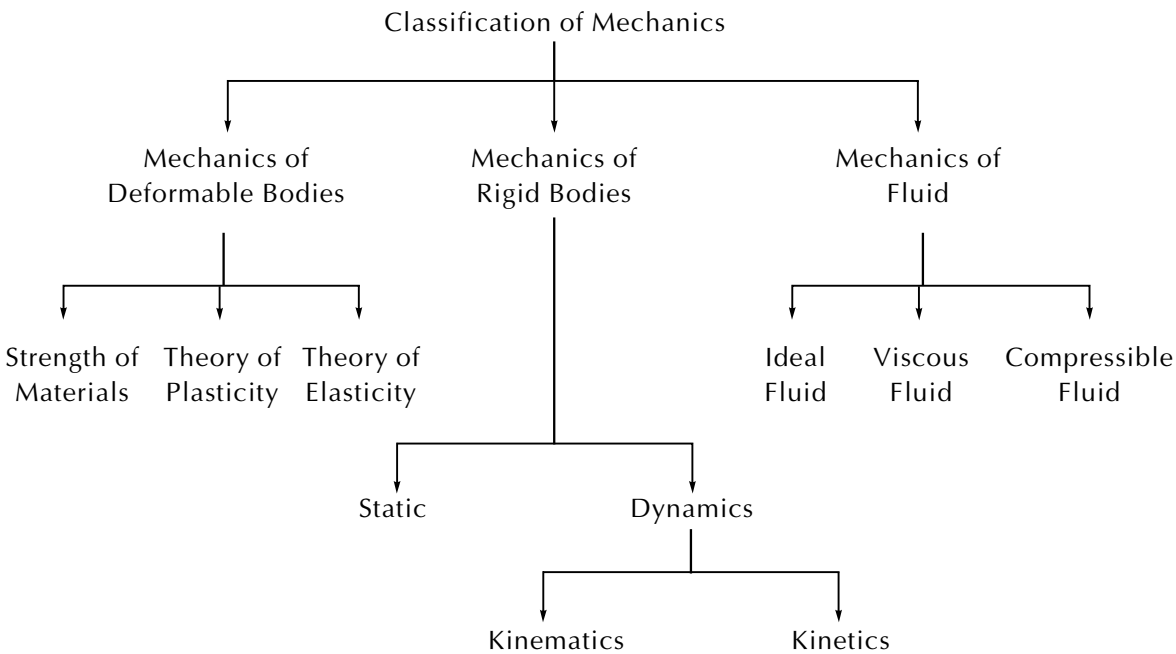

- **Statics :** It is the study of the effect of force system acting on a particle or rigid body which is at rest.
- **Dynamics :** It is the study of the effect of force system acting on a particle or a rigid body which is in motion. It can also be stated as the study of geometry of motion with or without reference to the cause of motion.

  It must be noted that

  1. the study of *geometry of motion* means relationship among displacement, velocity, acceleration and time, and

  2. with reference to *cause of motion* means considering mass and the force causing the motion.

  Dynamics is further classified into kinematics and kinetics.
- **Kinematics :** It is the study of geometry of motion without reference to the cause of motion (i.e. mass and force causing motion are not considered).
- **Kinetics :** It is the study of geometry of motion with reference to the cause of motion (i.e. mass and force causing motion are considered).

1.4 BASIC CONCEPTS

- **Space :** It is *the region which extends in all directions and contains everything in it*. The concept of space is associated with the notion of the position of point P. The position of P can be defined by fundamental quantity (length) measured from certain reference point, called origin, in three given directions. These lengths are known as *coordinates of point P* (x,y,z).
- **Time :** It is *the measure of duration between successive events.* Time is the basic quantity involved in the analysis of dynamics but not in statics.
- **Matter :** It refers to anything that *occupies space and can be perceived by our senses.*
- **Mass :** It is *the quantity of matter contained in a body.* These quantities do not change on account of the position occupied by the body. The force of attraction exerted by the Earth on two different bodies with equal mass will be in same manner. Mass is *the property of a body which measures its resistance to a change of motion*. Its SI unit is kg.
- **Scalar :** A physical quantity which requires only *magnitude* for its complete description is known as *scalar*. For example, distance, area, volume, mass, work, power, energy, time, density, speed, etc. Scalar quantities are added and subtracted by simple arithmetic methods.
- **Vector :** A physical quantity which requires both *magnitude* and *direction* for its complete description is known as *vector*. For example, force, displacement, velocity, acceleration, momentum, moment, couple, torque, impulse, weight, etc.

1.5 IDEALISATION IN MECHANICS

While studying the effect of force system acting on a particle or a rigid body, which may be at rest or in motion, in mechanics some assumptions (idealisations) are made to simplify the problem without affecting the actual results.

- **Particle :** It is a matter having considerable mass but negligible dimension.
  A body whose shape and size is not considered in analysis of a problem and all the forces acting on a given body are assumed to act at a single point is considered to be a particle.

  Meaning of Particle in Engineering Mechanics : While studying problems in engineering mechanics dimensions of a particular body can be neglected and it can be assumed as a particle for simplicity of solution. For example,

  1. An artificial satellite, though large in size, is assumed as a particle while studying its orbital motion around the Earth. this is because, here, the size of satellite is negligible as compared to the Earth and the size of its orbit.

  2. A train moving from one station to another is under observation for kinematic quantity such as displacement, velocity and acceleration w.r.t. time. Here, the size of the train is negligible as compared to its distance between two stations, which may be in kilometres, so the train is treated as a particle. It means the point (train) is moving from one position to another.

- **Rigid Body :** It is a matter having considerable mass as well as dimension.

  Combination of large number of particles forms a *body* and is defined as *the matter limited in all directions and has dimensions*.

  It is defined as *a body in which the particle does not change the relative position whatever large force may be applied.* In other words, *the body which is capable to withstand its shape and size and does not deform under the action of forces is termed as a rigid body.*

  For example, beams and columns of building structures do deform under the action of loads they carry, but the actual deformation that has taken place in structures are negligible and therefore, the body is assumed to be a rigid body.

Note : It is a hypothetical concept. No body is perfectly rigid in the universe. Assumption of a rigid body is made, in most of the cases, when the actual deformation that has taken place in structures are negligible and such assumptions of a rigid body helps for analysis of problem. Therefore, in engineering mechanics we are going to assume all given bodies as rigid bodies.

- **Point Load :** Generally, the load of a body at contact surface is acting over a certain area. But for simplicity and calculation it is assumed to act as a point.

  The constant forces are distributed on a surface area of the body, whereas non-constant forces are distributed over the volume of the body. When the area over which a constant force applied is very small, it may be approximated by a point and the force is said to be concentrated at the point of contact. Such point of contact is termed as *point of application of force*.

  For example, a block kept on the floor having weight W and normal reaction exerted by the floor is represented by concentrated force (Fig.1.5-i).

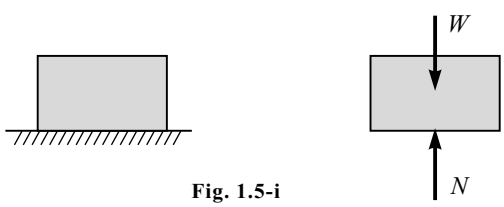

Fig. 1.5-i

A wheel of car in contact with ground having weight W, though shares some surface area at contact, but still the normal reaction exerted by the ground is represented by concentrated force (Fig. 1.5-ii).

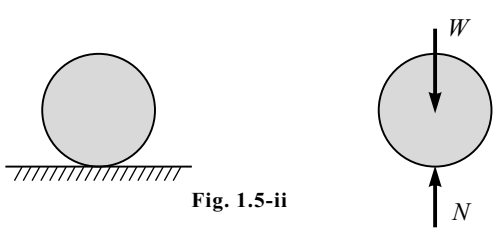

Fig. 1.5-ii

This assumption is suitable because the area of contact is very small as compared to the size of the wheel.

Note : Distributed load [Uniformly Distributed Load (UDL) and Uniformly Varying Load (UVL)] are converted into an equivalent point load.

1.6 LAWS OF MECHANICS (FUNDAMENTAL PRINCIPLES)

The study of mechanics depends upon few fundamental principles which are based on experimental evidence.

1. **Newton's First Law of Motion :** Every body continues in its state of rest or of uniform motion in a straight line unless an external unbalanced force acts on it. Newton's first law contains the principle of the equilibrium of forces, which is the main topic of concern in *statics*.

2. **Newton's Second Law of Motion :** The rate of change of momentum of a body is directly proportional to the force acting on it and takes place in the direction of applied force.

   Thus, $F = \dfrac{mv - mu}{t} = m\dfrac{(v-u)}{t}$

   $\therefore\ F = ma$ where F is the resultant force acting on a body of mass m moving with acceleration a.

   As per Newton's second law, the acceleration of a particle is proportional to the resultant force acting on it and is in the direction of this force ($F = ma$). This law forms the basis for most of the analysis in *dynamics*.

3. **Newton's Third Law of Motion :** To every action, there is an equal and opposite reaction. The forces of action and reaction between interacting bodies are equal in magnitude, opposite in direction and are collinear. It means that forces always occur in pairs of equal and opposite forces.

4. **Newton's Law of Gravitation :** The force of attraction between any two bodies in the universe is directly proportional to the product of their masses and inversely proportional to the square of the distance between them. For example, if m_1 and m_2 are the masses of two bodies and r is the distance between them, then the force of attraction F between them is given by

   $$F \propto \frac{m_1 m_2}{r^2} \qquad \therefore\ F = \frac{G m_1 m_2}{r^2}$$

   where G is the universal gravitational constant.

5. **Principle of Transmissibility of Force :** It states that *the condition of equilibrium or uniform motion of rigid body will remain unchanged if the point of application of a force acting on a rigid body is transmitted to act at any other point along its line of action.*

Fig. 1.6-i

Refer to Fig. 1.6-i. A force F acting on the rigid body at point A can be replaced by the same force F at the point B provided point A and B lies on the same line of action of the force. Though the nature changes as shown from PUSH to PULL but the external effect remains unchanged due to the principle of transmissibility of force.

6. **Law of Parallelogram of Force :** If two forces acting simultaneously on a body at a point are represented in magnitude and direction by two adjacent sides of a parallelogram, then their resultant is represented in magnitude and direction by the diagonal of parallelogram which passes through the point of intersection of the two sides representing the forces. Refer to Fig. 1.6-ii.

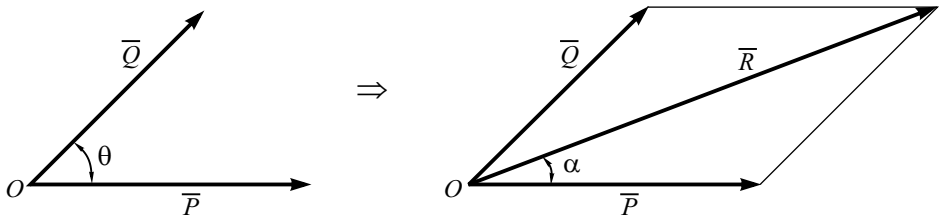

Fig. 1.6-ii

$$R = \sqrt{P^2 + Q^2 + 2\,PQ\cos\theta} \qquad ...(1.1)$$

$$\tan\alpha = \frac{Q\sin\theta}{P + Q\cos\theta} \qquad ...(1.2)$$

1.7 CONCEPT OF FORCE

Every body at rest has a tendency to remain at rest. Similarly, a body in motion has a tendency to remain in motion. This is known as the *property of inertia*. The state of the body changes only if an external agency acts on it.

1. **Force :** An external agency which changes or tends to change the state of rest or of uniform motion of a body upon which it acts is known as *force*.
2. **One Newton Force :** It is *a force required to produce an acceleration of* 1 m/s^2 *in a body of mass* 1 kg.

$$\text{Force} = \text{Mass} \times \text{Acceleration}$$

$$F = m \times a \qquad ...(1.3)$$

$$\therefore\ 1\ \text{N} = 1\ \text{kg} \times 1\ \text{m/s}^2$$

3. **Characteristics of Force**
   - **(a)** Magnitude
   - **(b)** Direction (Line of action and sense)
   - **(c)** Point of application

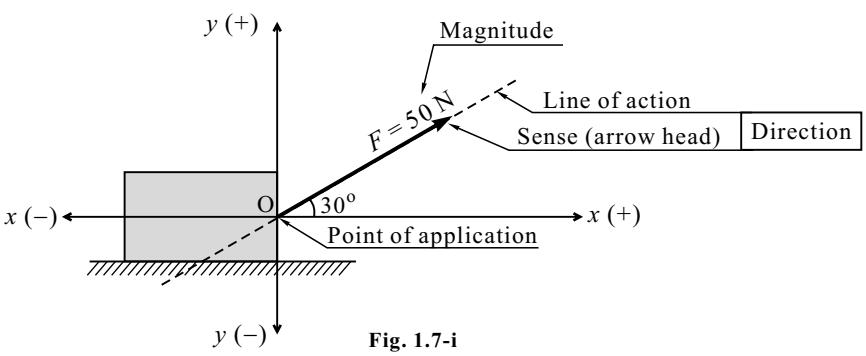

Fig. 1.7-i

Description of Force

(i) A force is a result of the action of one body on another body. It may be due to direct contact between the bodies like striking a target or by remote action like gravitational or magnetic. Thus, force may be contact force or non-contact force.

(ii) Force imparts motion to the body or it can affect the motion of the body on which it acts.

(iii) Force can accelerate the motion if applied in the same direction of motion or it can de-accelerate the motion if applied in opposite direction of motion. It can also stop the motion of body.

(iv) Force may rotate the body.

(v) Force may maintain equilibrium condition of body.

(vi) The action of force may be of a push or pull type. It may produce tension or compression in a straight member (body).

We are going to deal with some special type of forces in mechanics which are as follows:

(i) ***Weight*** **:** *The gravitational force of attraction exerted by the earth on a body is known as the weight of the body*. This force exists when the body is at rest or in motion. Since this attraction is a force, the weight of body is expressed in Newton (N) in SI units.

$$\text{Weight} = \text{Mass} \times \text{Gravitational acceleration}$$

$$W = m \times g \qquad \text{...(1.4)}$$

Note : Though weight changes with latitude and altitude of place for simplicity of calculation purpose the value of $g = 9.81$ m/s^2 is used.

Example

What will be the weight of a body whose mass is 1 kg?

$$W = mg$$

$$\therefore \; W = (1 \text{ kg})(9.81 \text{ m/s}^2)$$

$$\therefore \; W = 9.81 \text{ N}$$

(ii) ***Resultant Force*** **:** It is a single force or a single couple or a single force and couple which can replace the given force system.

(iii) ***Equilibrent Force*** **:** It is a force which is equal in magnitude, opposite in direction and collinear to that of resultant force. It maintains the equilibrium condition of body.

(iv) ***Friction Force*** **:** It is a force which always opposes the relative motion of two bodies and acts tangential at the surface of contact due to roughness of surface and the material in contact.

(v) ***Resistance Force*** **:** It is a force which resists change in its state and acts in the opposite direction to the motion.

(vi) ***Spring Force*** **:** $F = kx$ where k is the spring constant and x is the deformation of spring.

(vii) ***Tensile Force*** **:** If a straight member in equilibrium is subjected to axial pair of pulling force having equal magnitude, opposite direction and same line of action, then tensile force is induced. It is an internal force.

(viii) ***Compressive Force*** **:** If a straight member in equilibrium is subjected to axial pair of pushing forces having equal magnitude, opposite direction and same line of action, then compressive force is induced. It is an internal force.

4. **Graphical Representation of Force :** A force is represented graphically by drawing a *straight line parallel to the line of action of the force*. Taking some suitable scale for the magnitude of the force its *magnitude is represented by the length of this line drawn to scale* as shown in Fig. 1.7-ii. The direction is given by *the angle made by the straight line with reference axis* and represented by means of *an arrow head placed at the end of the line*.

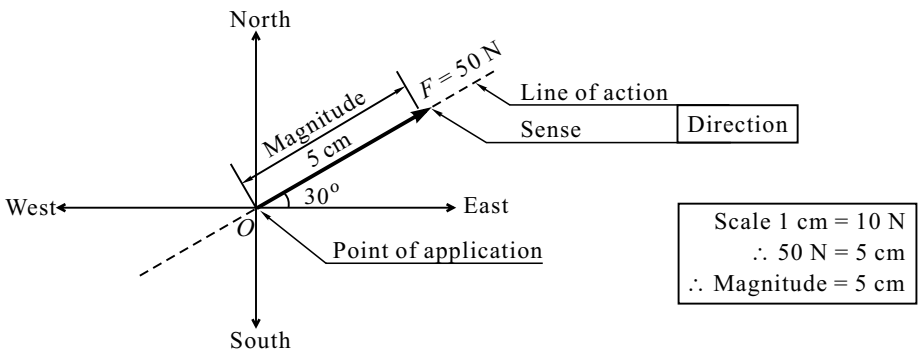

Fig. 1.7-ii

1.8 CLASSIFICATION OF FORCE SYSTEM

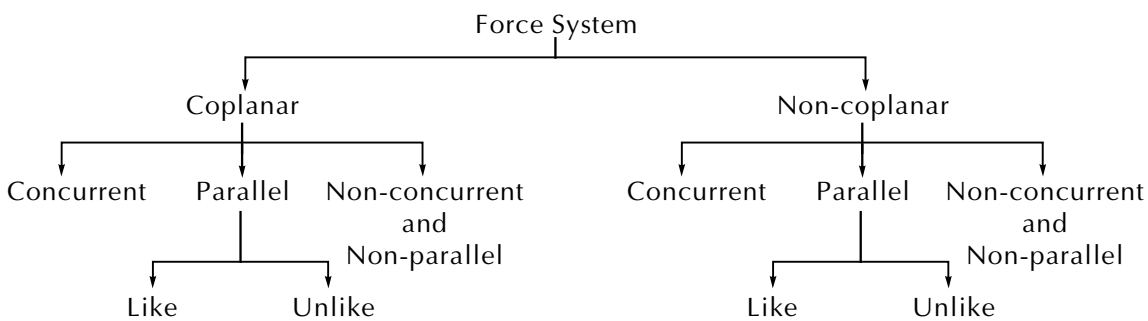

Force System : When the number of forces act simultaneously on a body then they are said to form a *force system*.

Depending upon whether the line of action of all the forces acting on the body lies in the same plane or in different plane, the force system may be classified as follows :

(i) ***Coplanar Force System*** **:** If the line of action of all the forces in the system lies on the same plane then it is called a *coplanar force system*.

(ii) ***Non-coplanar Force System*** **:** If the line of action of all the forces in the system do not lie on the same plane then it is called a *non-coplanar force system*.

These two force systems can be subclassified into three groups:

(a) ***Concurrent Force System*** **:** If the line of action of all the forces in the system passes through single point then it is called a *concurrent force system*.

Coplanar concurrent force — Non-coplanar concurrent force

Fig. 1.8-i

(b) ***Parallel Force System*** **:** If the line of action of all the forces in the system are parallel to each other then it is called a *parallel force system*. Parallel force system can be further subclassified into two groups, *like* and *unlike*.

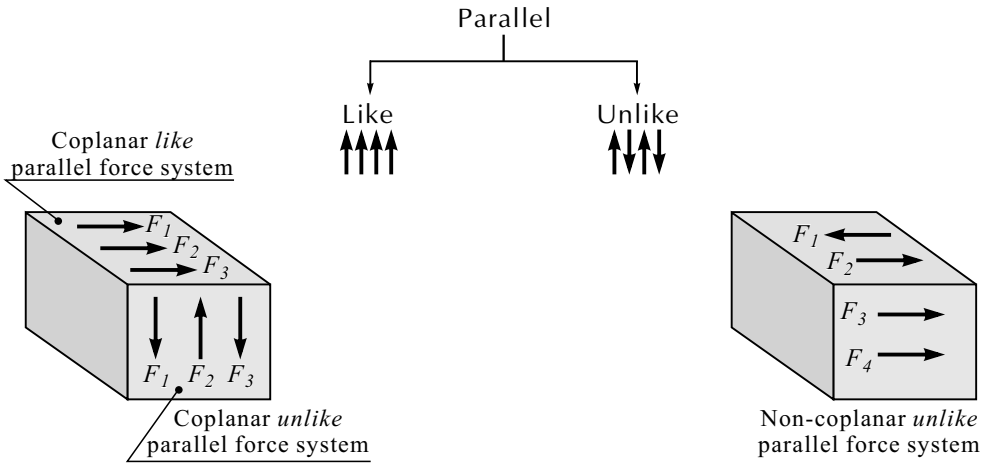

Fig. 1.8-ii

(c) ***Non-concurrent and Non-parallel Force System*** **:** If the lines of action of all the forces in the system are neither concurrent nor parallel then it is known as *non-concurrent and non-parallel force system*.

Coplanar non-concurrent and non-parallel force system — Non-coplanar non-concurrent and non-parallel force system

Fig. 1.8-iii

1.9 COMPOSITION OF FORCES

Forces may be combined (added) to obtain a single force which produces the same effect as the original system of forces. This single force is known as *resultant force*. The process of finding the resultant of forces is called *composition of forces*.

Force is a vector quantity. The method of addition of forces (vectors) is based on the parallelogram law.

Law of Parallelogram of Forces

The resultant of any two non-collinear concurrent forces may be found by this law which states that "*If two forces acting simultaneously on a body at a point are represented in magnitude and direction by two adjacent sides of a parallelogram, then their resultant is represented in magnitude and direction by the diagonal of parallelogram which passes through the point of intersection of the two sides representing the forces*".

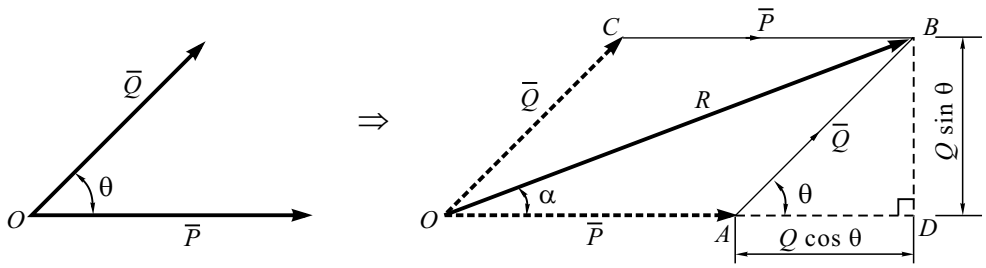

Fig. 1.9-i

Let P and Q be the two concurrent forces having included angle θ acting at and away from point O as shown in Fig. 1.9-i. These are represented by two adjacent sides OA and OC of the parallelogram $OABC$.

Draw a perpendicular from point B on OA extended, meeting at point D. As OC is parallel to AB and $OC = AB = Q$, $OA = P$ and $OB = R$.

In ΔODB,

$$OB^2 = OD^2 + BD^2$$

$$OB^2 = (OA + AD)^2 + BD^2$$

$$R^2 = (P + Q\cos\theta)^2 + (Q\sin\theta)^2$$

$$R^2 = P^2 + 2\,PQ\cos^2\theta + Q^2\cos^2\theta + Q^2\sin^2\theta$$

$$R^2 = P^2 + Q^2 + 2\,PQ\cos\theta$$

Magnitude of resultant $R = \sqrt{P^2 + Q^2 + 2\,PQ\cos\theta}$ ...(1.5)

In ΔOBD : Let α be the angle made by R with P,

$$\tan\alpha = \frac{BD}{OD} = \frac{BD}{OA + AB}$$

$$\tan\alpha = \frac{Q\sin\theta}{P + Q\cos\theta} \qquad ...(1.6)$$

Triangle Law of Force (Corollary of Parallelogram Law)

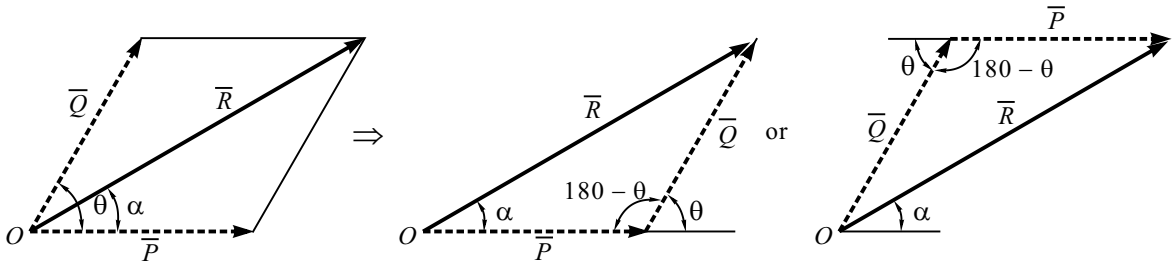

Fig. 1.9-ii

If two forces are represented by their force vectors placed tip to tail; their resultant is the vector directed form the tail of first vector to the tip of the second vector. Refer to Fig. 1.9-ii.

By cosine rule, we have

$$\therefore\ R^2 = P^2 + Q^2 - 2\,PQ\cos(180 - \theta)$$

$$\therefore\ R^2 = P^2 + Q^2 + 2\,PQ\cos\theta$$

$$\therefore\ R = \sqrt{P^2 + Q^2 + 2\,PQ\cos\theta}$$

Solved Problems on Composition of Forces by Parallelogram and Triangle Law

Problem 1

Find the resultant of the given forces.

(i) By Parallelogram Law

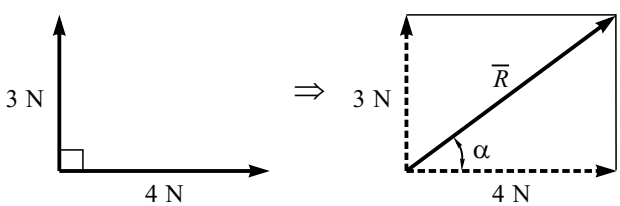

Fig. 1.1(a) : Given

$$\therefore\ R = \sqrt{4^2 + 3^2 + 2 \times 3 \times 4\cos 90^\circ}$$

$$R = 5\text{ N}$$

$$\tan\alpha = \frac{3\sin 90^\circ}{4 + 3\cos 90^\circ}$$

$$\therefore\ \alpha = 36.87^\circ$$

(ii) By Triangle Law

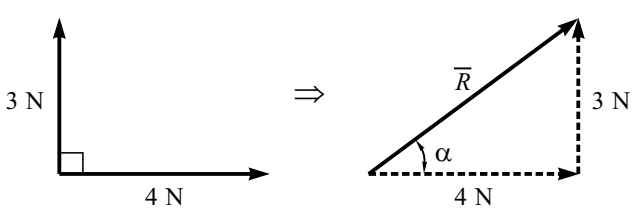

Fig. 1.1(b) : Given

By cosine rule

$$\therefore\ R = \sqrt{4^2 + 3^2 - 2 \times 3 \times 4\cos 90^\circ}$$

$$R = 5\text{ N}$$

By sine rule

$$\frac{R}{\sin 90^\circ} = \frac{3}{\sin\alpha}$$

$$\sin\alpha = \frac{3}{5}$$

$$\therefore\ \alpha = 36.87^\circ$$

Problem 2

Find the resultant of the given forces.

(i) By Parallelogram Law

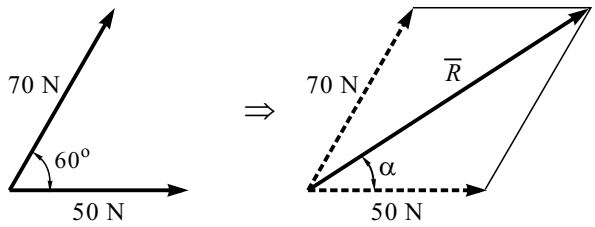

Fig. 1.2(a) : Given

$$R = \sqrt{50^2 + 70^2 + 2 \times 50 \times 70 \cos 60^\circ}$$

$$R = 104.4 \text{ N}$$

$$\tan \alpha = \frac{70 \sin 60^\circ}{50 + 70 \cos 60^\circ}$$

$$\tan \alpha = 0.7132 \qquad \therefore \alpha = 35.5^\circ$$

(ii) By Triangle Law

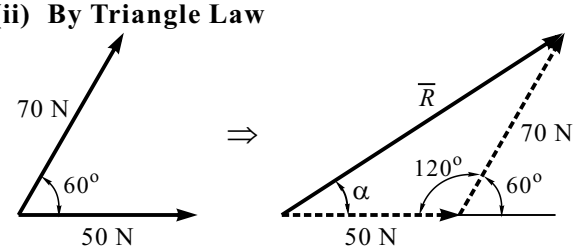

Fig. 1.2(b) : Given

By cosine rule

$$R = \sqrt{50^2 + 70^2 - 2 \times 50 \times 70 \cos 120^\circ}$$

$$R = 104.4 \text{ N}$$

By sine rule

$$\frac{R}{\sin 120^\circ} = \frac{70}{\sin \alpha}$$

$$\sin \alpha = \frac{70 \sin 120^\circ}{104.4} \qquad \therefore \alpha = 35.5^\circ$$

Problem 3

Find the resultant of the given forces.

(i) By Parallelogram Law

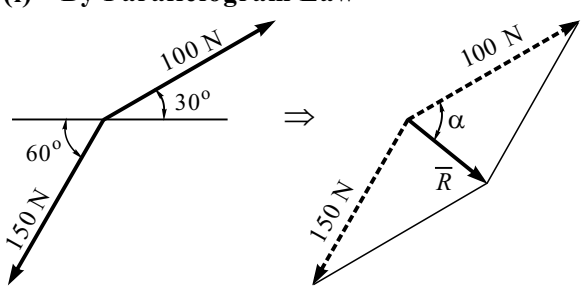

Fig. 1.3(a) : Given

$$R = \sqrt{100^2 + 150^2 + 2 \times 100 \times 150 \cos 150^\circ}$$

$$R = 80.74 \text{ N}$$

$$\tan \alpha = \frac{150 \sin 150^\circ}{100 + 150 \cos 150^\circ}$$

$$\tan \alpha = |-2.51|$$

$$\therefore \alpha = 68.26^\circ$$

(ii) By Triangle Law

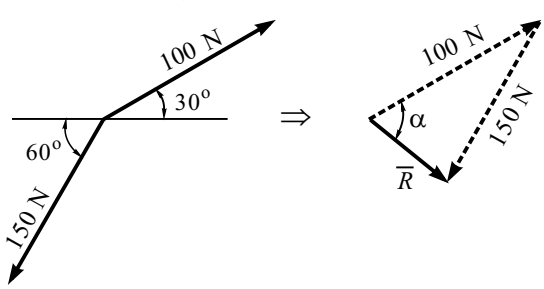

Fig. 1.3(b) : Given

By cosine rule

$$R = \sqrt{100^2 + 150^2 - 2 \times 100 \times 150 \cos 30^\circ}$$

$$R = 80.74 \text{ N}$$

By sine rule

$$\frac{R}{\sin 30^\circ} = \frac{150}{\sin \alpha}$$

$$\sin \alpha = \frac{150 \sin 30^\circ}{80.74} = 0.9289$$

$$\therefore \alpha = 68.26^\circ$$

1.10 RESOLUTION OF FORCE

The process of breaking the force into a number of components which are equivalent to the given forces is called *resolution of force*.

The law of parallelogram shows how to combine two forces into a resultant force whereas resolution of force is an inverse operation in which a given force is replaced by two components which are equivalent to the given force.

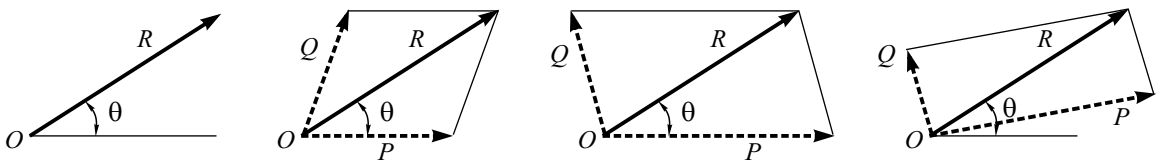

Fig. 1.10-i

Single force R is replaced by two components of force P and Q.

Figure 1.10-i shows that we can have infinite number of pair of oblique components of single force R such that R is the diagonal of various parallelogram.

Note : Even component of force can be further splitted into subcomponents which means resolution of single force can have infinite number of components too.

Solved Problems on Resolution of Force into Oblique Components of Force

Problem 4

Resolve the 100 N force acting a 30° to horizontal into two component one along horizontal and other along 120° to horizontal.

Solution

(i) Method I : By Parallelogram Law

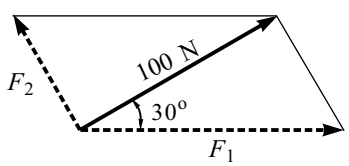

Fig. 1.4(a)

$$100 = \sqrt{F_1^2 + F_2^2 + 2\,F_1F_2 \cos 120^\circ}$$

$$10000 = F_1^2 + F_2^2 - F_1F_2 \qquad \text{..... (I)}$$

$$\tan 30^\circ = \frac{F_2 \sin 120^\circ}{F_1 + F_2 \cos 120^\circ}$$

$$0.5774\,F_1 - 0.2887\,F_2 = 0.866\,F_2$$

$$F_1 = 2\,F_2 \qquad \text{..... (II)}$$

Solving Eqs. (I) and (II)

$F_1 = 115.47$ N (→) $\quad F_2 = 57.76$ N (60°↖)

(ii) Method II : By Triangle Law

By sine rule

$$\frac{100}{\sin 60^\circ} = \frac{F_1}{\sin 90^\circ} = \frac{F_2}{\sin 30^\circ}$$

$F_1 = 115.47$ N (→) $\quad F_2 = 57.76$ N (60°↖)

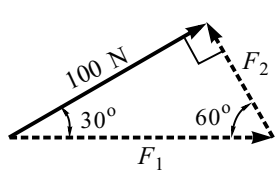

Fig. 1.4(b)

Problem 5

Resolve the 2000 N force into two oblique components; one acting along *AB* and the other acting along *BC*. Refer to Fig. 1.5(a).

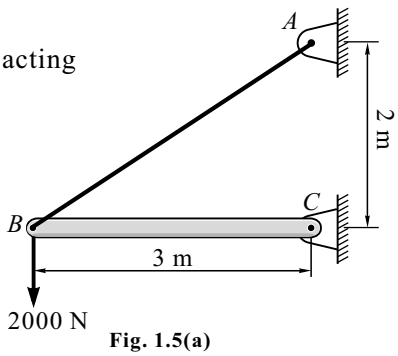

Fig. 1.5(a)

Solution

(i) By triangle law, we have

$$\tan\theta = \frac{2}{3}$$

$$\therefore \theta = 33.69^{\circ}$$

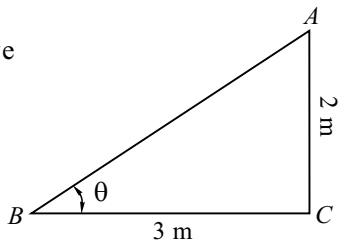

(ii) By sine rule, we have

$$\frac{2000}{\sin 33.69^{\circ}} = \frac{F_{AB}}{\sin 90^{\circ}} = \frac{F_{BC}}{\sin 56.31^{\circ}}$$

$$F_{AB} = 3605.56 \text{ N} \quad (33.69^{\circ}\swarrow)$$

$$F_{BC} = 3000 \text{ N} (\rightarrow)$$

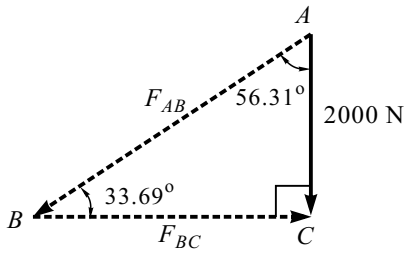

Fig. 1.5(b)

Problem 6

Resolve the force 500 N along *AB* and *CD*. Refer to Fig. 1.6(a).

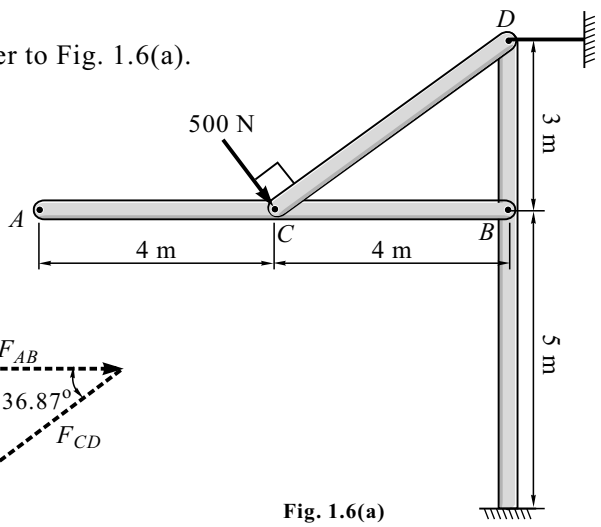

Fig. 1.6(a)

Solution

(i) By triangle law, we have

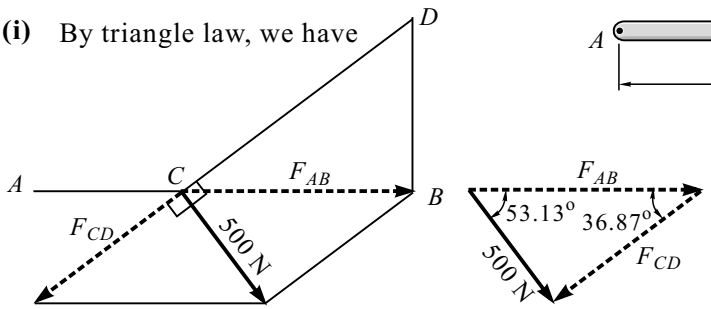

Fig. 1.6(b)

(ii) By sine rule, we have

$$\frac{500}{\sin 36.87^{\circ}} = \frac{F_{AB}}{\sin 90^{\circ}} = \frac{F_{BC}}{\sin 53.13^{\circ}}$$

$$F_{AB} = \frac{500}{\sin 36.87^{\circ}} \qquad F_{CD} = \frac{500 \sin 53.13^{\circ}}{\sin 36.87^{\circ}}$$

$$F_{AB} = 833.33 \text{ N} (\rightarrow) \qquad F_{CD} = 666.66 \text{ N} \quad (36.87^{\circ}\swarrow)$$

Problem 7

Resolve the force R = 60 N into two components F and 80 N, as shown in Fig. 1.7(a). Find the value of F and θ.

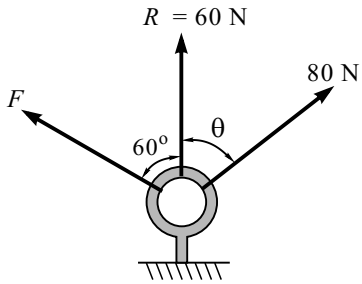

Fig. 1.7(a)

Solution

(i) By triangle law, we have

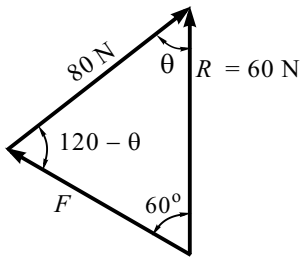

Fig. 1.7(b)

(ii) By sine rule, we have

$$\frac{80}{\sin 60^o} = \frac{F}{\sin \theta} = \frac{60}{\sin (120 - \theta)}$$

$$60 \sin 60^o = 80 \sin (120 - \theta)$$

$$\therefore \; 0.65 = \sin (120 - \theta)$$

$$40.54 = 120 - \theta$$

$$\therefore \; \theta = 79.46^o \quad (\theta \text{ with } 80 \text{ N})$$

$$F = \frac{80 \sin \theta}{\sin 60^o}$$

$$F = 90.82 \text{ N} \quad (F \text{ with } 60^o)$$

1.10.1 Resolution of Force into Rectangular Components of Force

Usually we require rectangular components of force. The process of breaking the force into mutually perpendicular components, which are equivalent to the given force, is called *rectangular components of force*.

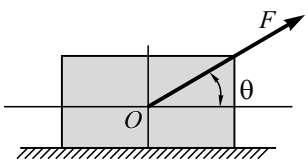

Fig. 1.10.2-i

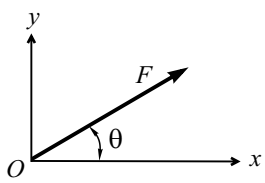

Fig. 1.10.2-ii

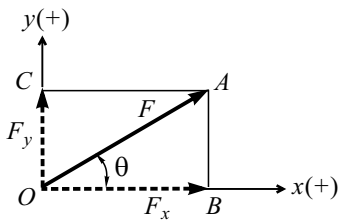

Fig. 1.10.2-iii

Consider a force of magnitude F acting at an angle θ with horizontal (Fig. 1.10.2-i), taking O as origin draw x-axis and y-axis (Fig. 1.10.2-ii). Let the force F be represented by line OA drawn to the scale. Draw perpendicular from point A on the x-axis to mark B and on the y-axis to mark C. OB (F_x) and OC (F_y) are the mutually perpendicular components of force F (Fig. 1.10.2-iii).

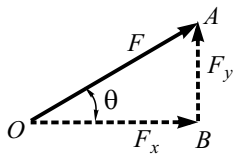

Fig. 1.10.2-iv By Triangle Law of Force

By trigonometry, we have the relation of components F_x and F_y with F and θ.

$$\sin\theta = \frac{F_y}{F} \quad \text{and} \quad \cos\theta = \frac{F_x}{F}$$

$$\therefore\ F_y = F\sin\theta \quad \text{and} \quad F_x = F\cos\theta$$

$$F = \sqrt{F_x^{\,2} + F_y^{\,2}} \text{ and } \theta = \tan^{-1}\left(\frac{F_y}{F_x}\right).$$

Sign Conventions

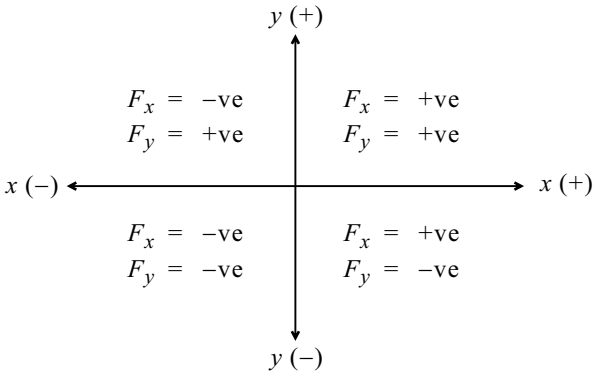

Fig. 1.10.2-v

1. Forces acting horizontally towards right are +ve and those towards left are −ve.
2. Forces acting vertically upward are +ve and those downward are −ve.

Example 1

Resolve the given force F into horizontal and vertical components.

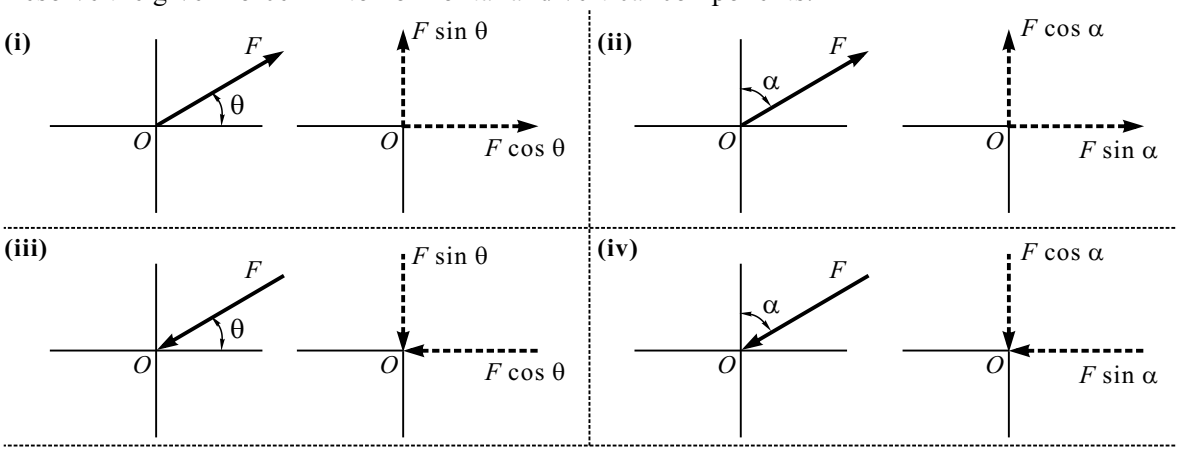

(v)

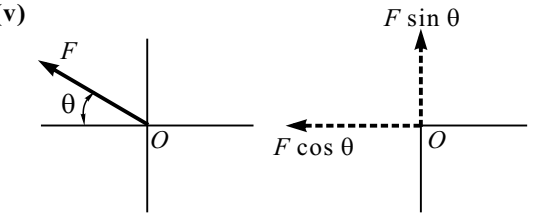

(vi)

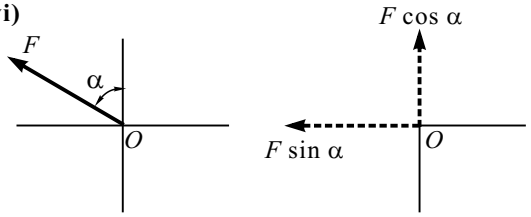

(vii)

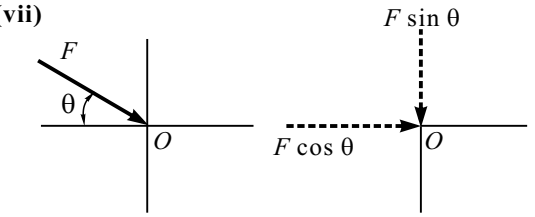

(viii)

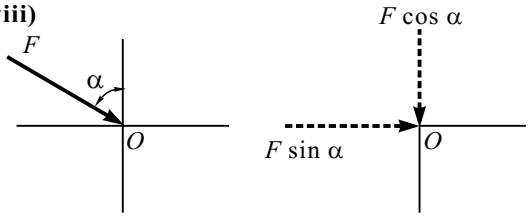

(ix)

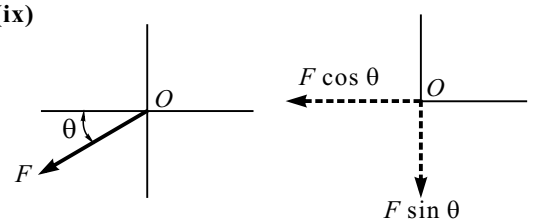

(x)

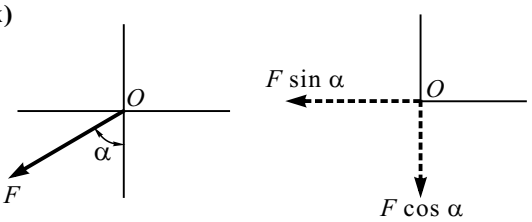

(xi)

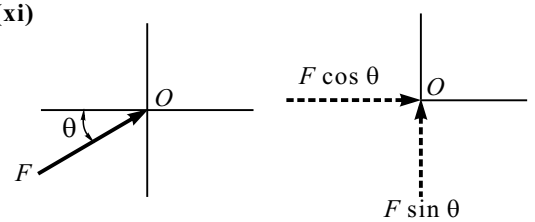

(xii)

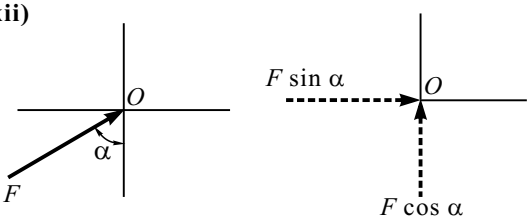

(xiii)

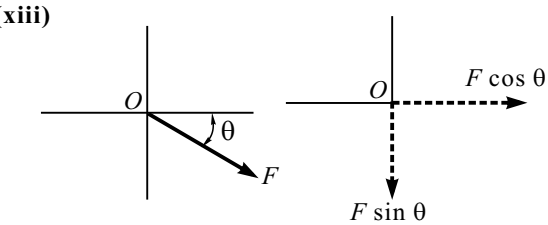

(xiv)

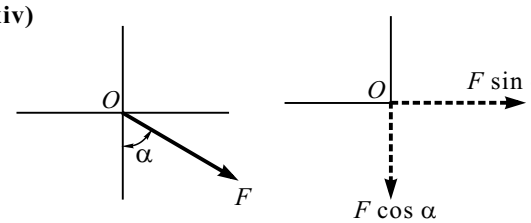

(xiii)

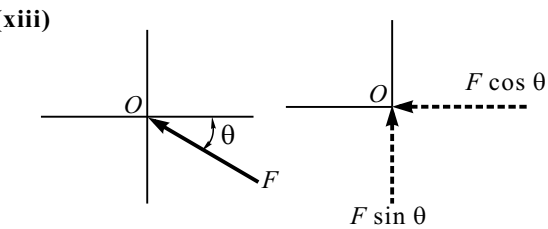

(xiv)

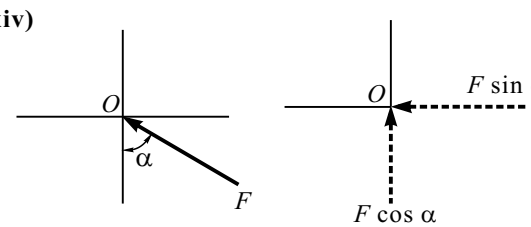

Example 2

The orientation of x-axis and y-axis need not be always horizontal and vertical. Resolve the force P along the x-axis and y-axis which are parallel and perpendicular to the inclined plane.

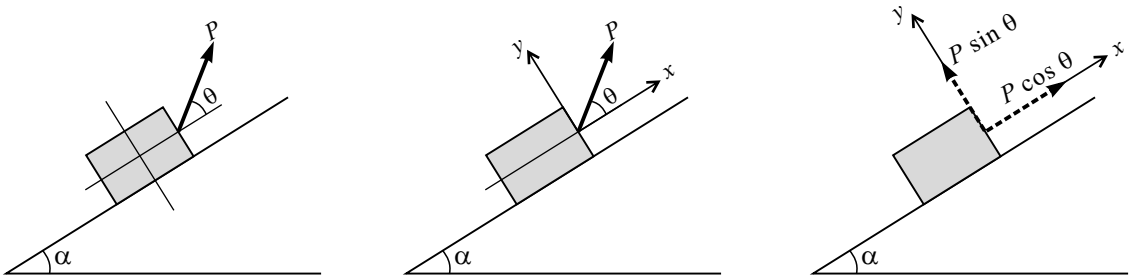

Given **Solution**

Example 3

Resolve the weight W of a block parallel and perpendicular to the inclined plane.

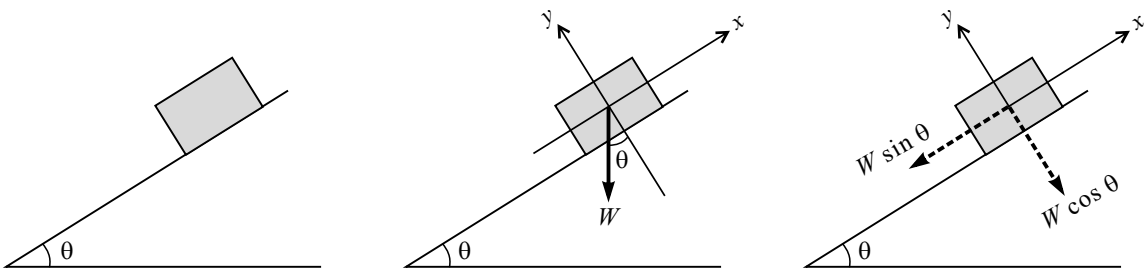

Given **Solution**

Example 4

A simple pendulum bob of mass m is hanging, as shown in the figure here. Resolve the weight of the bob into tangent and normal components.

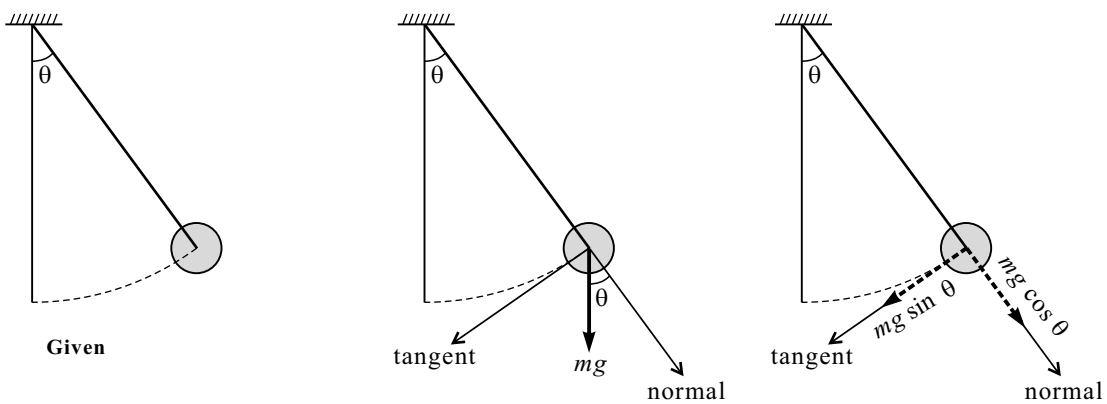

Given **Solution**

Solved Problems on Resolution of Force into Rectangular Components

Problem 8

Resolve the 2500 N force acting vertically on a wedge having inclination 22°, as shown in Fig. 1.8(a) into two components one acting along inclined 22° and the other perpendicular to the inclined.

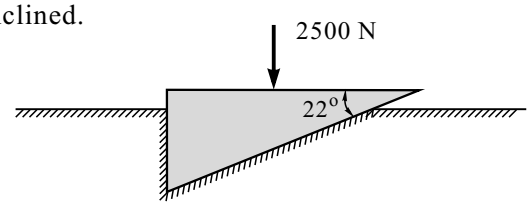

Fig. 1.8(a)

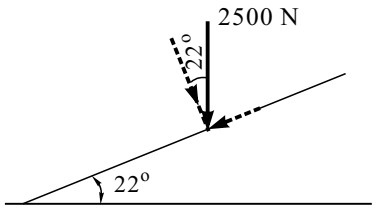

Fig. 1.8(b)

Solution

Component along inclined 22° = 2500 sin 22° = 936.52 N (22°)

Component perpendicular to inclined 22° = 2500 cos 22° = 2318 N (68°)

Problem 9

A force P is acting on a block as shown in Fig. 1.9(a). If the horizontal rectangular component of P is 40 N acting to the left then find the y component of P.

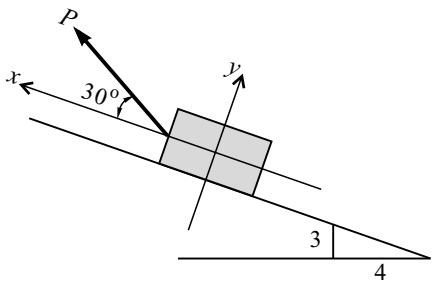

Fig. 1.9(a)

Solution

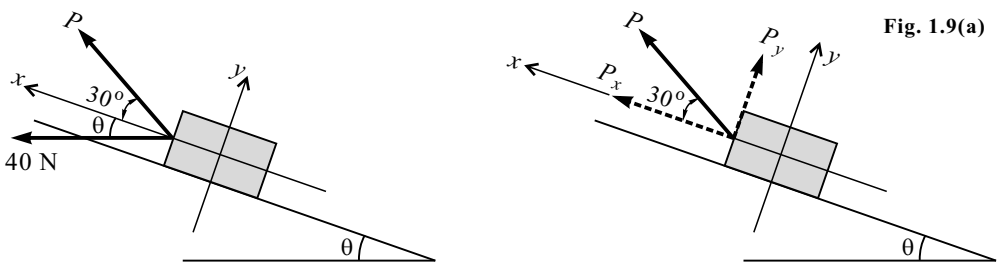

Fig. 1.9(b)

$$\tan\theta = \frac{3}{4}$$

$$\therefore \theta = 36.87^\circ$$

$$40 = P\cos(30 + \theta)$$

$$P = \frac{40}{\cos 66.87^\circ}$$

$$P = 101.82 \text{ N}$$

$$P_y = P\sin 30^\circ$$

$$P_y = 50.91 \text{ N } (53.13^\circ)$$

Problem 10

A block of weight 1000 N kept on an inclined plane is pushed by horizontal force 500 N as shown in Fig. 1.10(a). Find the sum of components of forces along *x-y* axis oriented parallel and perpendicular to the incline.

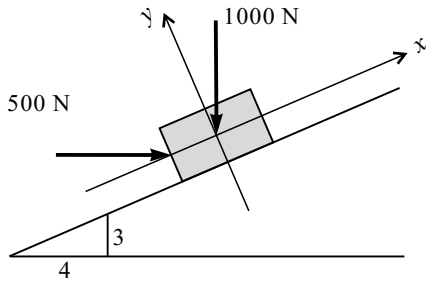

Fig. 1.10(a)

Solution

$$\left[\begin{array}{l} \tan\theta = \dfrac{3}{4} \\ \therefore\ \theta = 36.87^{\circ} \end{array}\right]$$

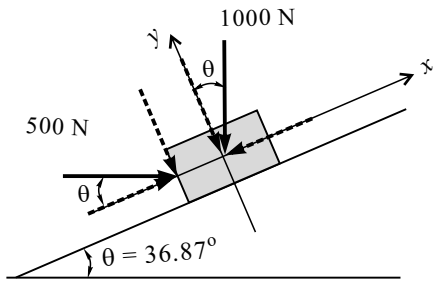

Fig. 1.10(b)

(i) $\Sigma F_x = 500\cos 36.87^{\circ} - 1000\sin 36.87^{\circ} = -200\text{ N} = 200\text{ N}\ (36.87^{\circ})$

(ii) $\Sigma F_y = -500\sin 36.87^{\circ} - 1000\cos 36.87^{\circ} = -1100\text{ N} = 1100\text{ N}\ (53.13^{\circ})$

Problem 11

A force 360 N is acting on a block as shown in Fig. 1.11(a). Find the components of forces along the *x-y* axis which are parallel and perpendicular to the inclined.

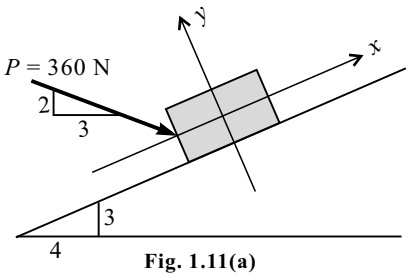

Fig. 1.11(a)

Solution

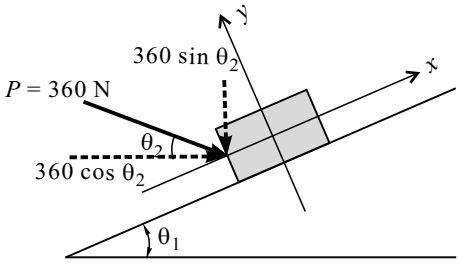

Fig. 1.11(b)

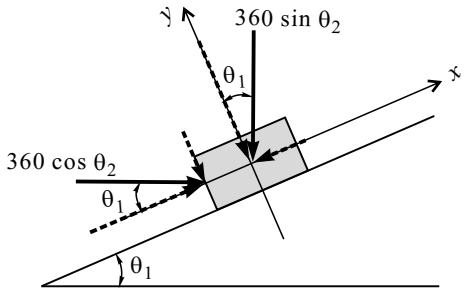

Fig. 1.11(c)

$$\tan\theta_1 = \frac{3}{4} \qquad \therefore\ \theta_1 = 36.87^{\circ}$$

$$\tan\theta_2 = \frac{2}{3} \qquad \therefore\ \theta_2 = 33.69^{\circ}$$

Method I

(i) $\Sigma F_x = (360\cos\theta_2)\cos\theta_1 - (360\sin\theta_2)\sin\theta_1 = 119.82\text{ N}$

$\therefore\ P_x = 119.82\text{ N}\ (36.87^{\circ})$

(ii) $\Sigma F_y = -(360 \cos \theta_2) \sin \theta_1 - (360 \sin \theta_2) \cos \theta_1 = -339.48$ N

$\therefore P_y = 339.48$ N $\left(\searrow 53.13^\circ\right)$

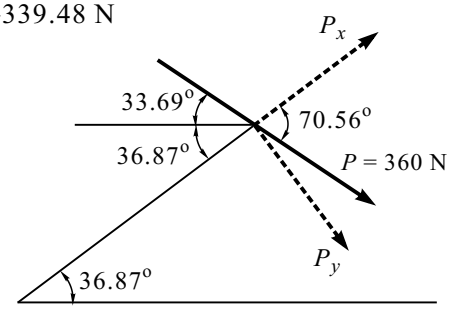

Fig. 1.11(d)

Method II

$P_x = 360 \cos 70.56^\circ$

$\therefore P_x = 119.82$ N $\left(\nearrow 36.87^\circ\right)$

$P_y = 360 \sin 70.56^\circ$

$\therefore P_y = 339.48$ N $\left(\searrow 53.13^\circ\right)$

Problem 12

A block kept on an inclined plane is acted upon by force inclined at 20° with horizontal as shown in Fig. 1.12(a). If P is resolved into components parallel and perpendicular to the inclined and the value of the parallel component is 300 N, compute the value of perpendicular component and of P.

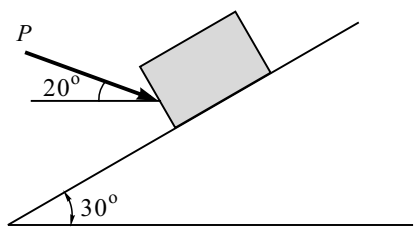

Fig. 1.12(a)

Solution

Method I

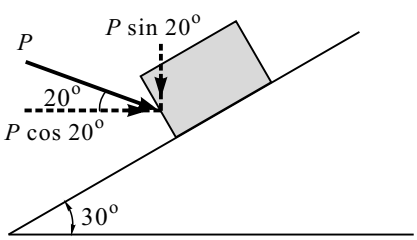

Fig. 1.12(b)

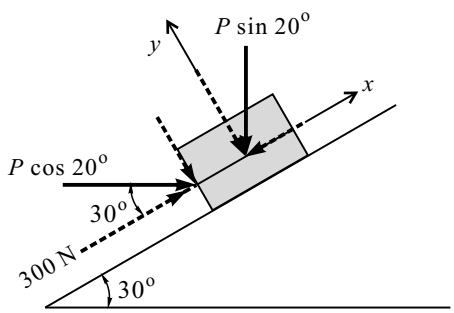

Fig. 1.12(c)

(i) $\Sigma F_x = 300 = (P \cos 20^\circ) \cos 30^\circ - (P \sin 20^\circ) \sin 30^\circ$

$$\therefore P = \frac{300}{\cos 20^\circ \cos 30^\circ - \sin 20^\circ \sin 30^\circ} = 466.7 \text{ N } \left(\searrow 20^\circ\right)$$

(ii) $\Sigma F_y = -P \cos 20^\circ \sin 30^\circ - P \sin 20^\circ \cos 30^\circ = -357.53$ N

$\therefore P_y = 357.53$ N $\left(\searrow 60^\circ\right)$

Method II

$P_x = 300 = P \cos 50^\circ$

$\therefore P = 466.7$ N $\left(\searrow 20^\circ\right)$

$P_y = P \sin 50^\circ$

$\therefore P_y = 357.53$ N $\left(\searrow 60^\circ\right)$

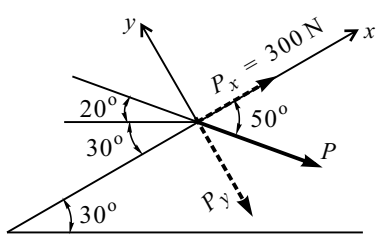

Fig. 1.12(d)

1.11 MOMENT OF FORCE

The rotational effect produced by a force is known as *moment of the force*. In other words, the tendency of a force to rotate a rigid body about an axis is measured by the moment of the force about that axis.

Consider a rigid body which is acted upon by a force F as shown in Fig. 1.11-i. Let an axis perpendicular to the plane of the paper pass through point O. The force F will have a tendency to rotate the body about the axis through O.

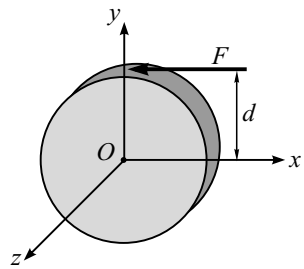

Fig. 1.11-i

The moment of the force about an axis through O is M_O and is given as the product of magnitude of the force F and perpendicular distance d from O to the line of action of the force F.

$$M_O = F \times d \qquad \text{...(1.7)}$$

Here, the point O is called the *moment centre* and d is called the *moment arm*. If F is in Newton and d is in meter then S.I. unit of moment of force is N-m.

It is important to note that the moment will be zero if $d = 0$, i.e., the line of action of the force intersects the axis about which the moment is considered. Thus, force produces zero moment about any axis or reference point which intersect the line of action of the force.

Sign Conventions

The moment of a force has not only magnitude but also a direction. This direction is perpendicular to the plane of the paper. The force will try to rotate the body in anticlockwise or clockwise depending upon the relative position of the force and its axis (Fig. 1.11-ii).

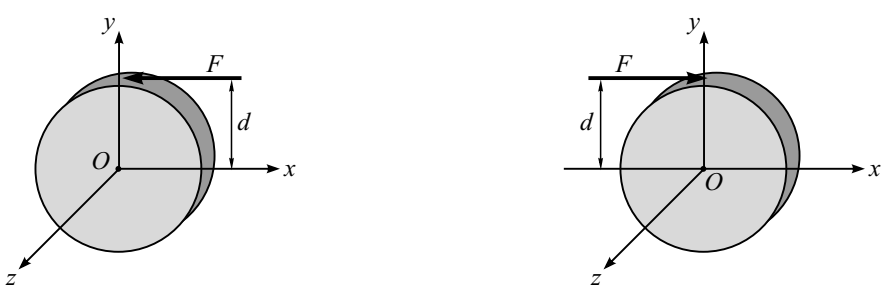

Anticlockwise sense (↺) of rotation Clockwise sense (↻) of rotation

Fig. 1.11-ii

As per the right-hand-thumb rule, we obtain anticlockwise moment as positive and clockwise moment as negative.

Note :
- Moment of force can be added algebraically as scalar quantities with proper sign convention.
- For coplanar force system, moment of force is taken about a point instead of an axis.

Example 1

The door is opened and closed by applying a single force (push or pull). Turning or rotating effect produced is the moment of force.

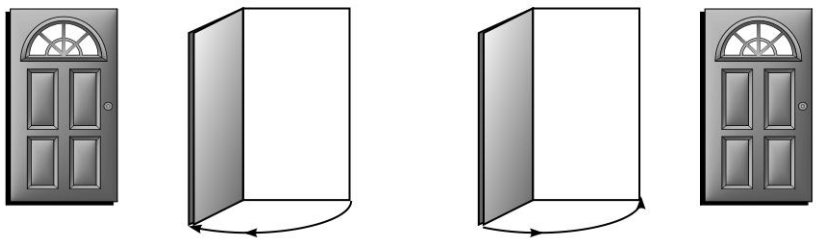

Door Opened (Pull) **Door Closed (Push)**

Example 2

Tightening of nut by a spanner produces the moment of force.

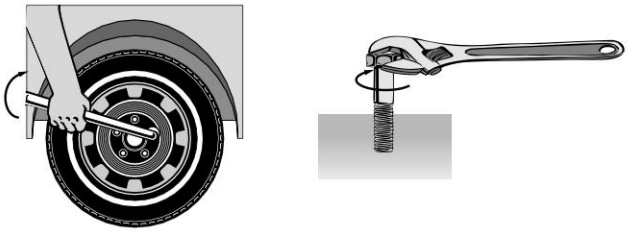

Solved Problems on Moment of Force

Problem 13

Find the moment of the force 50 N about points A, B, C, D and O respectively shown in Fig. 1.13.

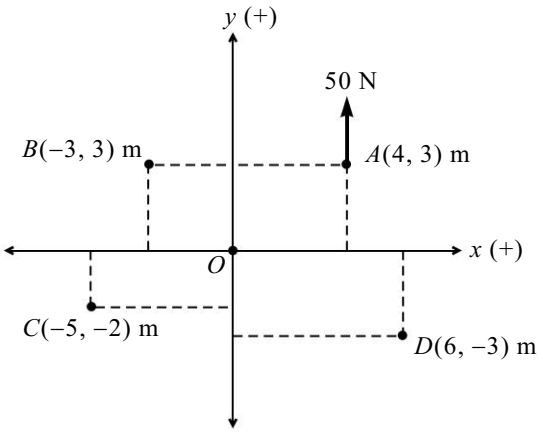

Fig. 1.13

Solution

(i) $M_A = 0$

(ii) $M_B = 50 \times 7 = 350$ N-m (↺)

(iii) $M_C = 50 \times 9 = 450$ N-m (↺)

(iv) $M_D = -(50 \times 2) = 100$ N-m (↻)

(v) $M_O = 50 \times 4 = 200$ N-m (↺)

Problem 14

Find the moment of the 500 N force about the point O, A, B and C respectively shown in Fig. 1.14(a).

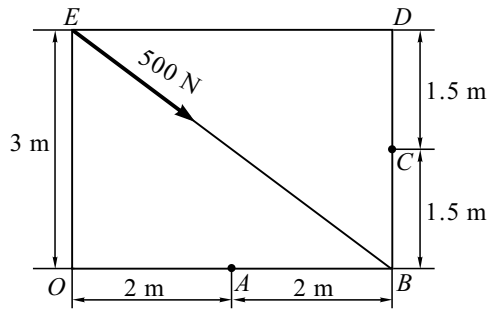

Fig. 1.14(a)

Solution

(i) $M_O = -500 \cos 36.87^o \times 3$

$M_O = -1200$ N-m

$M_O = 1200$ N-m (↻)

(ii) $\Sigma M_A = 500 \sin 36.87^o \times 2 - 500 \cos 36.87^o \times 3$

$\Sigma M_A = -600$ N-m

$\Sigma M_A = 600$ N-m (↻)

(iii) $M_B = 0$

(iv) $\Sigma M_C = -500 \cos 36.87^o \times 1.5 + 500 \sin 36.87^o \times 4$

$\Sigma M_C = 600$ N-m (↺)

(v) $M_D = 500 \sin 36.87^o \times 4$

$M_D = 1200$ N-m (↺)

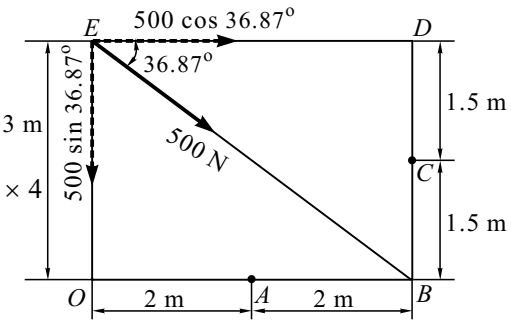

Fig. 1.14(b)

Problem 15

Find the moment of the force 2000 N about the point O shown in Fig. 1.15(a).

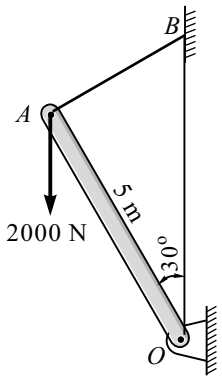

Fig. 1.15(a)

Solution

(i) **Method I**

Refer to Fig. 1.15(c)

$M_O = 2000 \sin 30^o \times 5$

$\therefore M_O = 5000$ N-m (↺)

(ii) **Method II**

Refer to Fig. 1.15(c)

$M_O = 2000 \times 5 \cos 60^o$

$\therefore M_O = 5000$ N-m (↺)

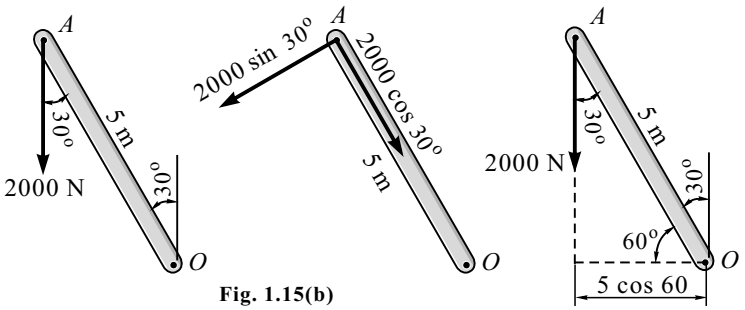

Fig. 1.15(b)

Fig. 1.15(c)

Problem 16

Find the moment of forces shown in Fig. 1.16(a) on lever about the point O .

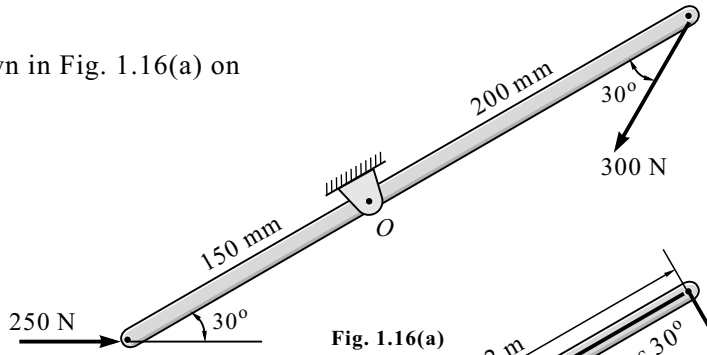

Fig. 1.16(a)

Solution

Refer to Fig. 1.16(b),

$$\Sigma M_O = 250 \times 0.15 \sin 30^\circ - 300 \sin 30^\circ \times 0.35$$

$$\Sigma M_O = -33.75 \text{ N-m}$$

$$\Sigma M_O = 33.75 \text{ N-m } (\circlearrowright)$$

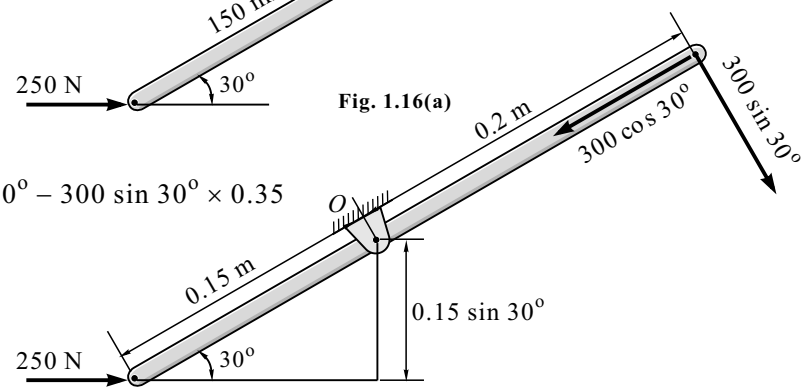

Fig. 1.16(b)

Problem 17

Find the moment of the force 50 N about the point O from Fig. 1.17(a).

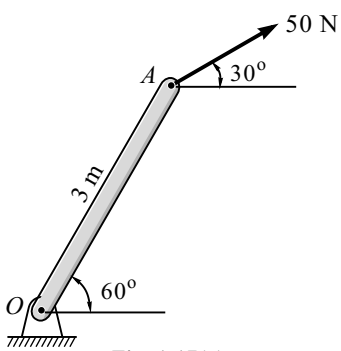

Fig. 1.17(a)

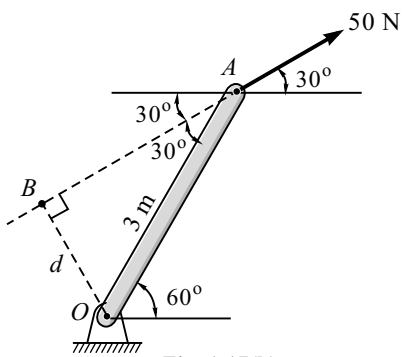

Fig. 1.17(b)

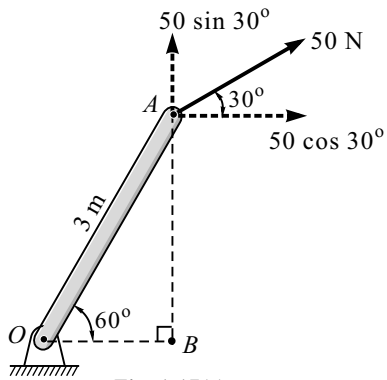

Fig. 1.17(c)

Solution

(i) Method I

Refer to Fig. 1.17(b). By geometry

$d = 3 \sin 30^\circ = 1.5$ m

$\therefore M_O = -(50 \times 1.5) = 75$ N-m $(\circlearrowleft)$

(ii) Method II

Refer to Fig. 1.17(c).

$AB = 3 \sin 60^\circ$ and $OB = 3 \cos 60^\circ$

$\therefore M_O = 50 \sin 30^\circ \times 3 \cos 60^\circ - 50 \cos 30^\circ \times 3 \sin 60^\circ = -75$

$\therefore M_O = 75$ N-m $(\circlearrowleft)$

Problem 18

A 75 N vertical force is applied to the end of a force 3 m long which is attached to a shaft at O as shown in Fig. 1.18(a). Determine

(i) the moment of the 75 N force about O,

(ii) the magnitude of the horizontal force applied at A which creates the same moment about O and

(iii) the smallest force applied at A which creates the same moment about O.

(iv) How far from the shaft at O a 200 N vertical force must act to create the same moment about O ?

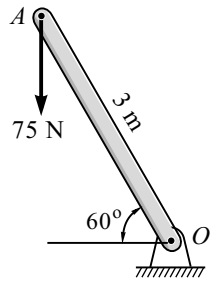

Fig. 1.18(a)

Solution

(i) The perpendicular distance from O to the line of action of the 75 N force is

$OB = 3 \cos 60^\circ = 1.5$ m

The magnitude of moment 75 N force about O [Fig. 1.18(b)] is

$M_O = 75 \times 3 \cos 60^\circ = 75 \times 1.5$

$M_O = 112.5$ N-m (↺)

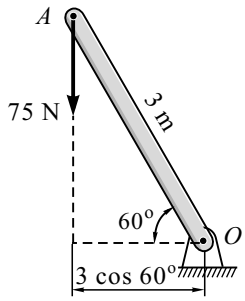

Fig. 1.18(b)

(ii) The perpendicular distance from O to the line of action of the force F is $AB = 3 \sin 60^\circ$.

F should be directed toward left to create anticlockwise moment [Fig. 1.18(c)] about O.

$M_O = F \times d$

$112.5 = F \times 3 \sin 60^\circ$

$\therefore F = 43.3$ N (←)

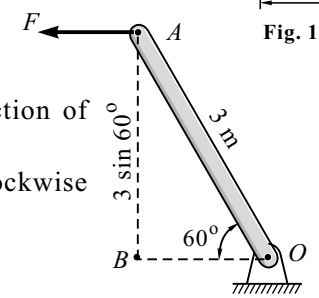

Fig. 1.18(c)

(iii) For the smallest force applied at A which creates the same moment about O, i.e., 112.5 N-m (↺), the perpendicular distance from O to the line of action of force d should be maximum [Fig. 1.18(d)].

Select force perpendicular to lever OA so maximum distance $d = 3$ m

$M_O = F \times d$

$112.5 = F \times 3$

$\therefore F = 37.5$ N (30° ↙)

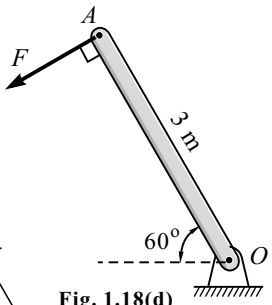

Fig. 1.18(d)

(iv) Let l be the distance at which the force 200 N is acting vertically down [Fig. 1.18(e)].

Perpendicular distance from O to the line of action of the 200 N force is $l \cos 60^\circ$.

$M_O = F \times l \cos 60^\circ$

$112.5 = 200 \times l \cos 60^\circ$

$\therefore l = 1.125$ m

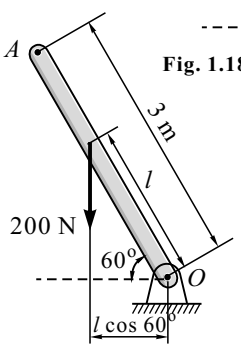

Fig. 1.18(e)

1.12 COUPLE

Two non-collinear parallel forces of equal magnitude and in opposite direction form a *couple*. It is a special case of parallel forces which produces the *rotary effect* on a rigid body.

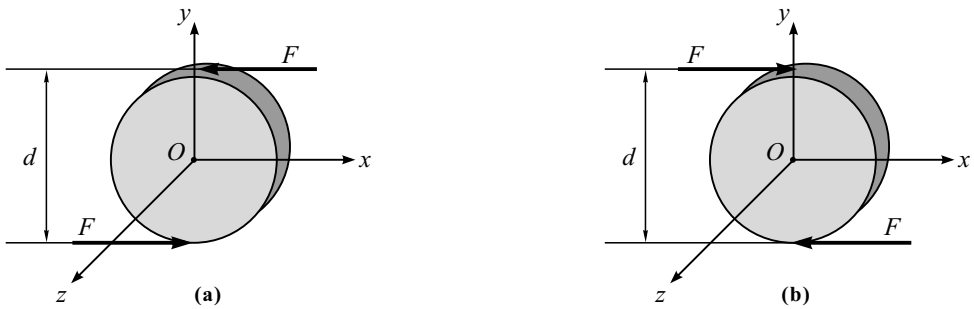

Fig. 1.12-i

Moment of a Couple

The magnitude of rotation known as the *moment of couple* is the product of common magnitude of the two force F and of the perpendicular distance d (arm of couple) between the lines of action.

Refer to Fig. 1.12-i(a) Refer to Fig. 1.12-i(b)

$$M = F \times d \ (\circlearrowright) \qquad M = F \times d \ (\circlearrowleft) \qquad \text{...(1.8)}$$

Sign Convention

The couple has not only a magnitude but also a direction. This direction is perpendicular to the plane of paper. The couple will try to rotate the body in clockwise or anticlockwise which can be identified by simple observation.

As per right-hand-thumb rule, we obtain *anticlockwise sense as +ve and clockwise sense as −ve*.

Properties of a Couple

1. Moment of couple is equal to the product of one of the force and the arm of couple.
2. The tendency of couple is to rotate the body about an axis perpendicular to the plane containing the two parallel forces.
3. The resultant force of a couple system is zero.
4. A couple can only rotate the body but cannot translate the body.
5. Moment of couple can be added algebraically as scalar quantity with proper sign convention.
6. A couple can be replaced by a couple only and not by a single force.
7. A couple is a pure turning moment which is always constant. It may be moved anywhere in its own plane on a body without any change of its effect on the body. Thus, a couple acting on a rigid body is known as a *free vector*.
8. A system of parallel forces whose resultant is a couple can attain equilibrium only by another couple of same magnitude and opposite direction.
9. A couple does not have a moment centre, like moment of force.

Why is a Couple a Free Vector ?

Case (i)

Magnitude of moment of couple M is equal to the product of the common magnitude of the two forces F and of the perpendicular distance between the lines of action d. The sense of couple M is anticlockwise by observation.

$$\text{Moment of couple } M = F \times d \ (\circlearrowleft) \qquad ...(1.9)$$

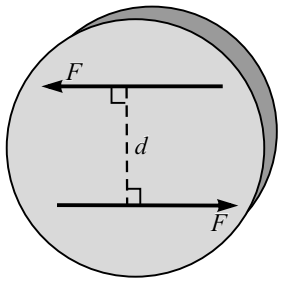

Fig. 1.12-ii(a)

Case (ii)

Take moment of two forces about a point O. As per sign convention, anticlockwise direction of rotation is positive.

From Fig. 1.12-ii(b), we have

$$M = F \times \frac{d}{2} + F \times \frac{d}{2}$$

$$M = F\left(\frac{d}{2} + \frac{d}{2}\right)$$

$$M = F \times d \ (\circlearrowleft) \qquad ...(1.10)$$

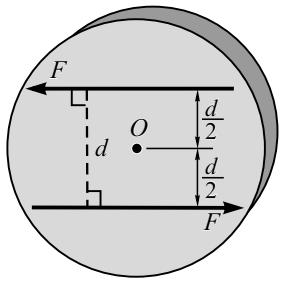

Fig. 1.12-ii(b)

Case (iii)

Take moment of two forces about a point A.

From Fig. 1.12-ii(c), we have

$$M = F \times d_2 - F \times d_1$$

$$M = F\,(d_2 - d_1)$$

$$M = F \times d \ (\circlearrowleft) \qquad ...(1.11)$$

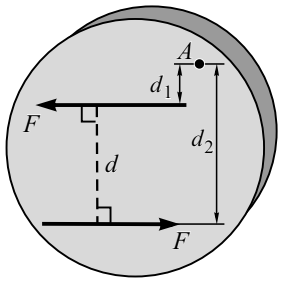

Fig. 1.12-ii(c)

It may be seen that Eqs. (1.9), (1.10) and (1.11) have the same result, which shows that moment of couple is constant and independent of any point.

Therefore, '*couple is a free vector*'.

Example 1

The stearing wheel of a car is the moment of couple.

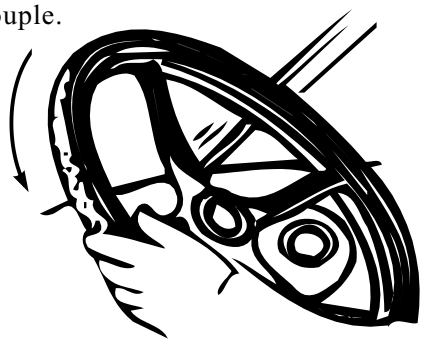

Example 2

Rotation of a key to lock or unlock is the moment of a couple.

Example 3

Opening or closing of a tap is the moment of a couple.

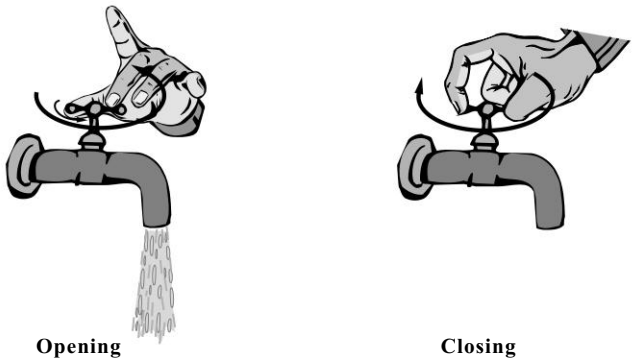

Example 4

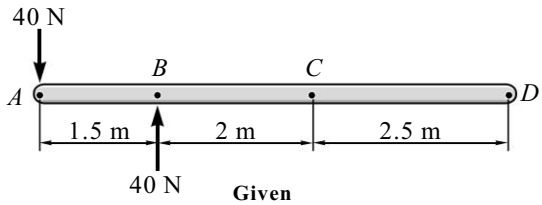

Solution

From the given figure, we have

(i) Moment of couple $M = 40 \times 1.5 = 60$ N-m (↺)

(ii) Moment of forces about the point A

$$M_A = 40 \times 1.5 = 60 \text{ N-m } (\circlearrowleft)$$

(iii) Moment of forces about the point B

$$M_B = 40 \times 1.5 = 60 \text{ N-m } (\circlearrowleft)$$

(iv) Moment of forces about the point C

$$M_C = 40 \times 3.5 - 40 \times 2 = 40(3.5 - 2)$$

$$= 40 \times 1.5 = 60 \text{ N-m } (\circlearrowleft)$$

(v) Moment of force about the point D

$$M_D = 40 \times 6 - 40 \times 4.5 = 40(6 - 4.5)$$

$$= 40 \times 1.5 = 60 \text{ N-m } (\circlearrowleft)$$

From **(i)**, **(ii)**, **(iii)**, **(iv)** and **(v)**,

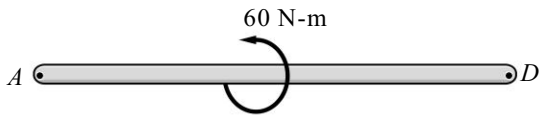

Note : The above example shows that *moment of couple is a constant*. Hence, a couple is treated as free vector which can be represented anywhere on a rigid body.

Equivalent Couples

Example 1

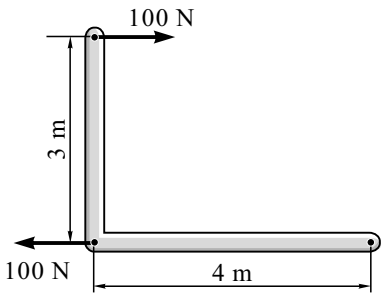

Given

$M = 100 \times 3$

$M = 300$ N-m (↻)

Example 2

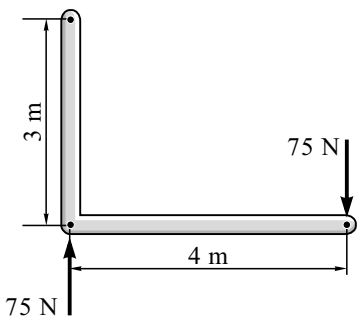

Given

$M = 75 \times 4$

$M = 300$ N-m (↻)

Example 3

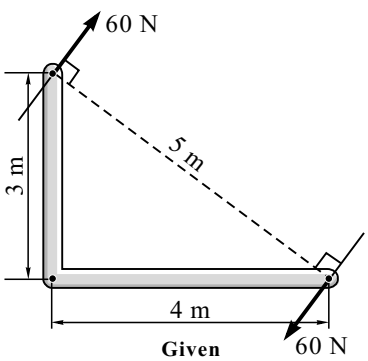

Given

$M = 60 \times 5$

$M = 300$ N-m (↻)

The above three examples show that the moment of a couple is same. Couple acting on a rigid body produces a rotational effect. Each couple in the above example will cause the rigid body to rotate clockwise with a moment equal to 300 N-m. Therefore, the three couples are equivalent.

This discussion shows that it does not matter *where* the two forces forming a couple act, or *what* magnitude and direction they have. The only thing that matters is the moment of couple. Couples with same moment will have the same effect on the rigid body.

Addition of Couples

Example 1

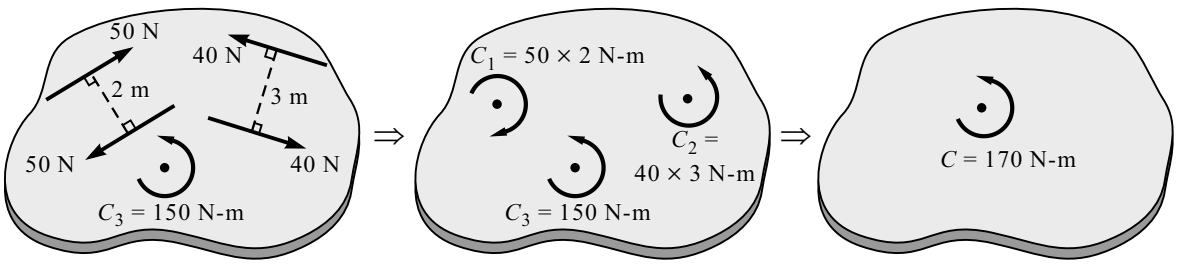

Given

From the given figure, we have

$$C = C_1 + C_2 + C_3$$

i.e., $$C = -100 + 120 + 150$$

$$\therefore\ C = 170 \text{ N-m } (\circlearrowleft)$$

The above example shows that the number of couples acting on a rigid body can be replaced by a single couple by taking their algebraic sum with proper sign convention.

1.13 TRANSFER OF FORCE TO THE PARALLEL POSITION

Resolution of a Force into a Force-Couple System

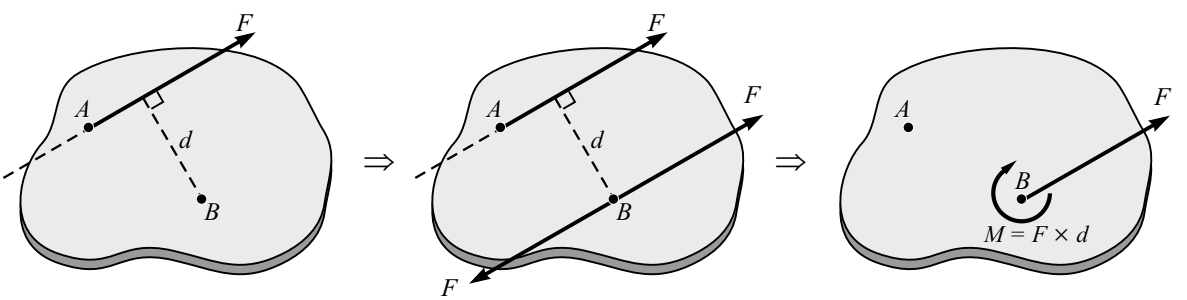

(a) **(b)** **(c)**

Fig. 1.13-i

Refer to Fig. 1.13-i(a). Consider a force acting at point A on a rigid body. This force is to be replaced by a force and couple at the point B.

Refer to Fig. 1.13-i(b). Apply two forces equal in magnitude and opposite in direction parallel to force F at point B. This addition of forces does not change the original effect on rigid body. Observing carefully we see, out of three forces two forces are acting in opposite direction at A and B form a couple.

Moment of couple $M = F \times d$ ($\circlearrowright$).

Refer to Fig. 1.13-i(c). Thus, to shift a force to a new parallel position, a couple is required to be added to the system. Here we can see that moment of couple (M) is equal to moment of force about point B [Refer to Fig. 1.13-i(a), $M_B = F \times d$ ($\circlearrowright$)].

Replacement of a Force Couple System into a Force

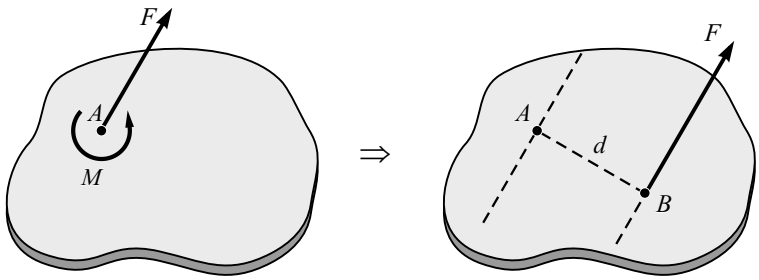

(a) **(b)**

Fig. 1.13-ii

It is exactly the reverse procedure to resolution of a force into a force couple system. This is done by moving the force F to a new parallel line of action at a distance d from its original line of action such that

$$d = \frac{M}{F} \qquad \text{...(1.12)}$$

so that the moment due to this force about A is same as that before, i.e., M.

Solved Problems on Transfer of Force to Parallel Position

Problem 19

Resolve the force $F = 900$ N acting at B into a couple and a force at O. Refer to Fig. 1.19(a).

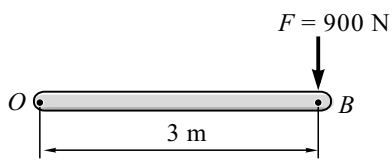

Fig. 1.19(a)

Solution

When the force is shifted from the point B to O it is shifted as it is along with couple of moment

$$M = F \times d = 900 \times 3$$

$$M = 2700 \text{ N-m } (\circlearrowleft)$$

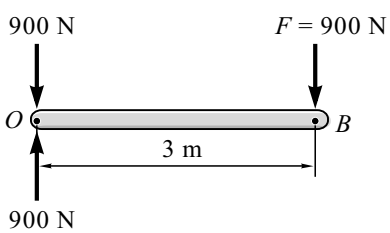

Fig. 1.19(b)

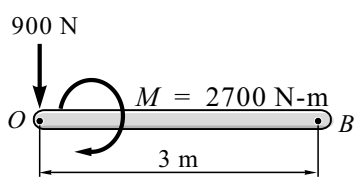

Fig. 1.19(c)

Problem 20

Replace the force 600 N from the point A by equivalent force couple at B. Refer to Fig. 1.20(a).

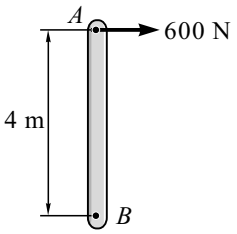

Fig. 1.20(a)

Solution

Refer to Figs. 1.20(b) and (c).

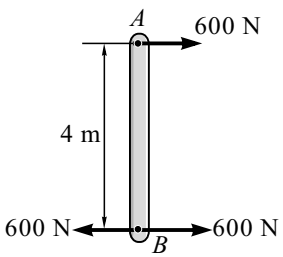

Fig. 1.20(b)

⇒

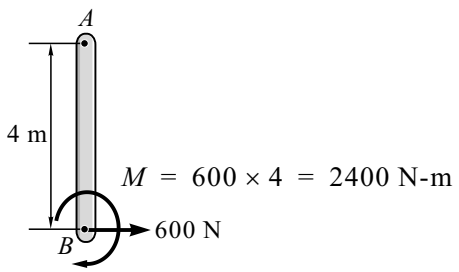

Fig. 1.20(c)

The force of 600 N acting at point A can be replaced at B by a force 600 N as it is (i.e., Horizontal) and a couple of moment

$$M = 600 \times 4 = 2400 \text{ N-m } (\circlearrowright)$$

Problem 21

Replace the force 3000 N from the point A by equivalent force couple at B. Refer to Fig. 1.21(a).

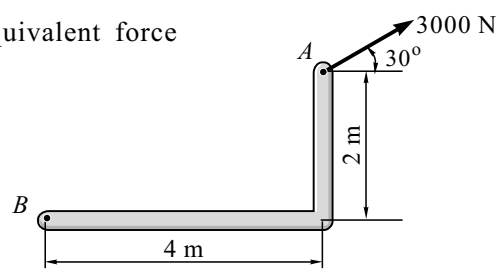

Fig. 1.21(a)

Solution

Refer to Fig. 1.21(b).

Couple = Moment of forces about B

$$\Sigma M_B = 3000 \sin 30^\circ \times 4 - 3000 \cos 30^\circ \times 2$$

$$\Sigma M_B = 803.85 \text{ N-m } (\circlearrowleft)$$

$$\text{Couple} = 803.85 \text{ N-m } (\circlearrowleft)$$

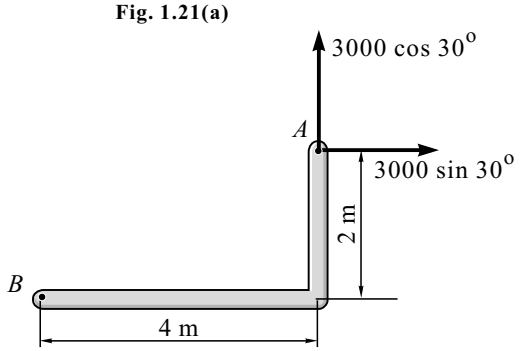

Fig. 1.21(b)

Equivalent force couple at B is shown in Fig. 1.21(c).

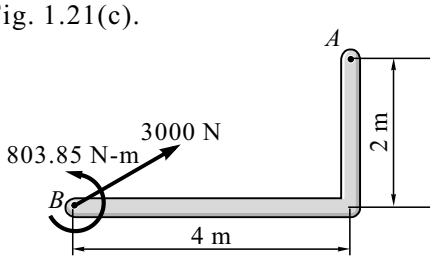

Fig. 1.21(c)

1.14 SI UNITS USED IN MECHANICS

Sr.	Quantity	Unit	SI Symbol
	(Base Units)		
1.	Length	meter (or *metre*)	m
2.	Mass	kilogram	kg
3.	Time	second	s
	(Derived Units)		
4.	Acceleration, linear	metre/second^2	m/s^2
5.	Acceleration, angular	radian/second^2	rad/s^2
6.	Area	metre^2	m^2
7.	Density	kilogram/metre^3	kg/m^3
8.	Force	newton	N (= kg•m/s^2)
9.	Frequency	hertz	Hz (= 1/s)
10.	Impulse, linear	newton-second	N•s
11.	Impulse, angular	newton-metre-second	N•m•s
12.	Moment of force	newton-metre	N•m
13.	Moment of inertia, area	metre^4	m^4
14.	Moment of inertia, mass	kilogram-metre^2	kg•m^2
15.	Momentum, linear	kilogram-metre/second	kg•m/s (= N•s)
16.	Momentum, angular	kilogram-metre^2/second	kg•m^2/s (= N•m•s)
17.	Power	watt	W (= J/s = N•m/s)
18.	Pressure, stress	pascal	Pa (= N.m/m^2)
19.	Product of inertia, area	metre^4	m^4
20.	Product of inertia, mass	kilogram-metre^2	kg•m^2
21.	Spring constant	newton/metre	N/m
22.	Velocity, linear	metre/second	m/s
23.	Velocity, angular	radian/second	rad/s
24.	Volume	metre^3	m^3
25.	Work, energy	joule	J (= N•m)
	(Supplementary and Other Acceptable Units)		
26.	Distance (navigation)	nautical mile	(= 1.852 km)
27.	Mass	ton (metric)	t (= 1000 kg)
28.	Plane angle	degrees (decimal) / radian	^{o} / -
29.	Speed	knot	(= 1.852 km/h)
30.	Time	minute / hour / day	min / h / d

SUMMARY

- **Mechanics :** It is the branch of physics which deals with the study of effect of force system acting on a particle or a rigid body which may be at rest or in motion.
- **Statics :** It is the study of effect of force system acting on a particle or rigid body which is at rest.
- **Dynamics :** It is the study of effect of force system acting on a particle or a rigid body which is in motion. Dynamics is the study of geometry of motion with or without reference to the cause of motion.
- **Kinematics :** It is the study of geometry of motion without reference to the cause of motion (i.e., mass and the force causing motion are not considered).
- **Kinetics :** It is the study of geometry of motion with reference to the cause of motion (i.e., mass and the force causing motion are considered)
- **Space :** It is the region which extends in all directions and contains everything in it.
- **Time :** It is measure of duration between successive event. Time is the basic quantity involved in the analysis of dynamics but not in statics.
- **Matter :** It is that which occupies space and can be perceived by our senses.
- **Mass :** It is the quantity of matter contained in a body.
- **Scalar :** A physical quantity which requires only magnitude for its complete description is known as scalar.
- **Vector :** A physical quantity which requires both magnitude and direction for its complete description is known as vector.
- **Particle :** It is a matter having considerable mass but negligible dimension. A body whose shape and size is not considered in analysis of problem and all the forces acting on a given body is assumed to act at the single point is considered to be a particle.
- **Rigid Body :** It is a matter having considerable mass as well as dimension. In other words, the body which is capable to withstand its shape and size and does not deform under the action of forces is termed as rigid body.
- **Newton's First Law of Motion :** Every body continues in its state of rest or of uniform motion in a straight line unless an external unbalanced force acts on it.
  Newton's first law contains the principle of the equilibrium of forces, which is the main topic of concern in Statics.
- **Newton's Second Law of Motion :** The acceleration of a particle is proportional to the resultant force acting on it and is in the direction of this force ($F = ma$). This law forms the basis for most of the analysis in dynamics.
- **Newton's Third Law of Motion :** To every action, there is an equal and opposite reaction.
  The forces of action and reaction between interacting bodies are equal in magnitude, opposite in direction and collinear. It means that forces always occur in pairs of equal and opposite forces.

- **Principle of Transmissibility of Force :** It states that the condition of equilibrium or uniform motion of rigid body will remain unchanged if the point of applications of a force acting on the rigid body is transmitted to act at any other point along its line of action.

PUSH PULL

- **Force :** An external agency which changes or tends to change the state of rest or of uniform motion of a body upon which it acts is known as force.
- **Characteristics of Force : (i)** Magnitude **(ii)** Direction (Line of action and sense) **(iii)** Point of application.
- **Weight :** The gravitational force of attraction exerted by the earth on a body is known as the weight of the body. This force exists whether the body is at rest or in motion. Since this attraction is a force, the weight of body should be expressed in Newton (N) in SI units.

$$\text{Weight} = \text{Mass} \times \text{Gravitational acceleration}$$
$$W = m \times g$$

Though weight changes with latitude and altitude of place for simplicity of calculation purpose the value of $g = 9.81$ m/s^2 is used.

- **Classification of Force**

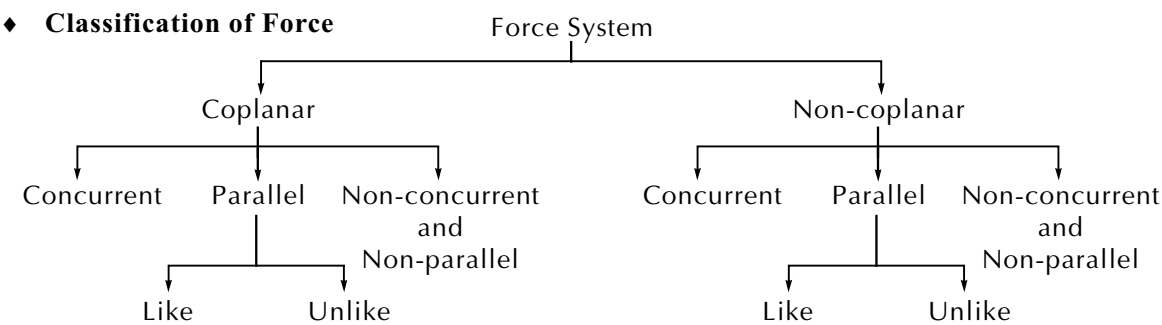

- **Composition of Forces :** Forces may be combined (added) to obtain a single force which produces same effect as the original system of forces. This single force is called a resultant force. The process of finding the resultant of forces is called composition of forces.
- **Resolution of Force :** The process of breaking the force into number of component which are equivalent to the given force is called resolution of force.
- **Resolution of Force into Rectangular Components of Force :** Usually we require rectangular components of force. The process of breaking the force into mutually perpendicular components which are equivalent to the given force is called rectangular components of a force.

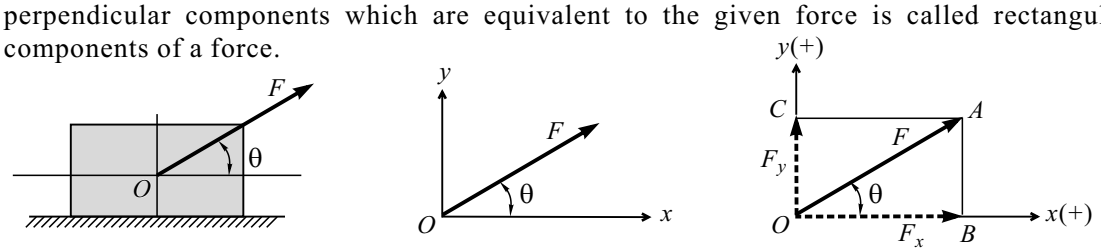

Sign Conventions : (i) Forces acting horizontally towards right are +ve and left are –ve.
(ii) Forces acting vertically upward are +ve and downward are –ve.

- **Moment of the Force :** The rotational effect produced by force is known as moment of the force.

  The moment of the force about an axis through O is M_O and is given as the product of magnitude of the force F and perpendicular distance d from O to the line of action of the force F.

$$M_O = F \times d$$

Sign Conventions : As per the right-hand-thumb rule, we obtain anticlockwise moment as positive and clockwise moment as negative.

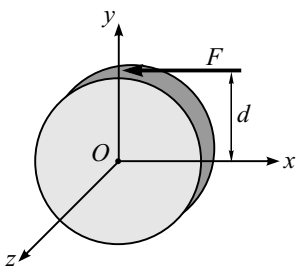

Anticlockwise sense (↺) of rotation

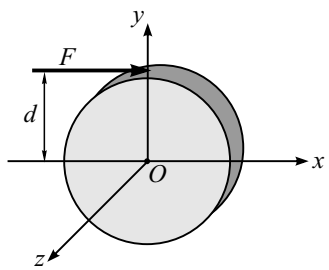

Clockwise sense (↻) of rotation

- **Couple :** Two non-collinear parallel forces of equal magnitude and in opposite direction forms a couple.

- **Moment of Couple :** The magnitude of rotation known as the moment of couple is the product of common magnitude of the two force F and of the perpendicular distance d (arm of couple) between the lines of action.

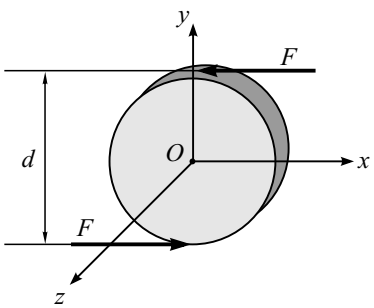

$M = F \times d$ (↻)

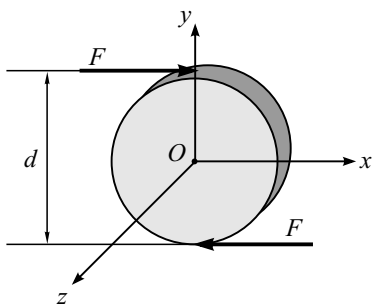

$M = F \times d$ (↺)

Sign Conventions : As per the right-hand-thumb rule, we obtain anticlockwise sense as +ve and clockwise sense is –ve.

EXERCISES

[I] Problems

1. Determine the algebraic sum of force components in x and y direction as shown in Fig. 1.E1 with proper sign convention.

[***Ans.*** $\Sigma F_x = 189.87$ N ($\leftarrow$) and
$\Sigma F_y = 59.29$ N ($\downarrow$)]

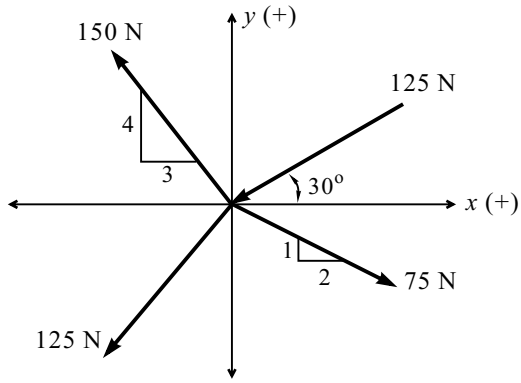

Fig. 1.E1

2. The block, having mass 10 kg is placed on inclined plane, is subjected to horizontal and vertical forces as shown in Fig. 1.E2. Find the algebraic sum of component of forces along x and y axis such that x-axis is parallel and y-axis is perpendicular to the inclined.

[***Ans.*** $\Sigma F_x = 101{,}14$ N ($\angle 36.87^\circ$) and
$\Sigma F_y = 198.48$ N ($\angle 53.13^\circ$)]

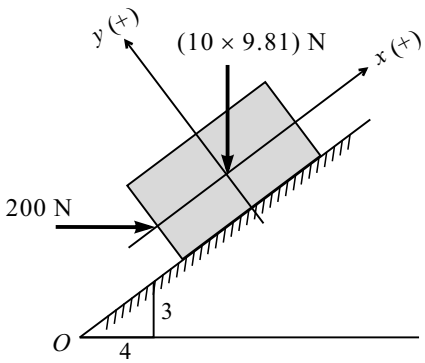

Fig. 1.E2

3. The vertical component of force F in Fig. 1.E3 is 200 N upward through O. Find the force F and its horizontal component.

[***Ans.*** $F = 230.94$ N (60°) and
$F_x = 115.47$ N ($\leftarrow$)]

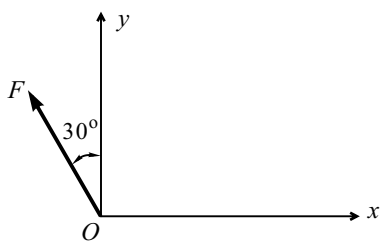

Fig. 1.E3

4. A 150 N force is acting vertically down through the point B, shown in Fig. 1.E4. Resolve 150 N force into oblique components, one acting along AB and other acting along BC.

[***Ans.*** $F_{BC} = 75$ N (30°) and
$F_{AB} = 64.95$ N ($\rightarrow$)]

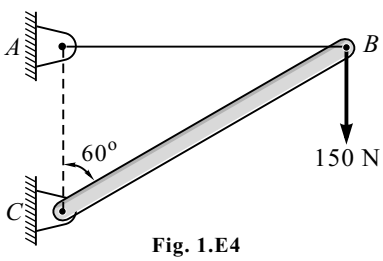

Fig. 1.E4

5. Determine the moment about O of the force F = 75 N acting along the sides of polygons shown in Fig. 1.E5 having length of side 5 cm.

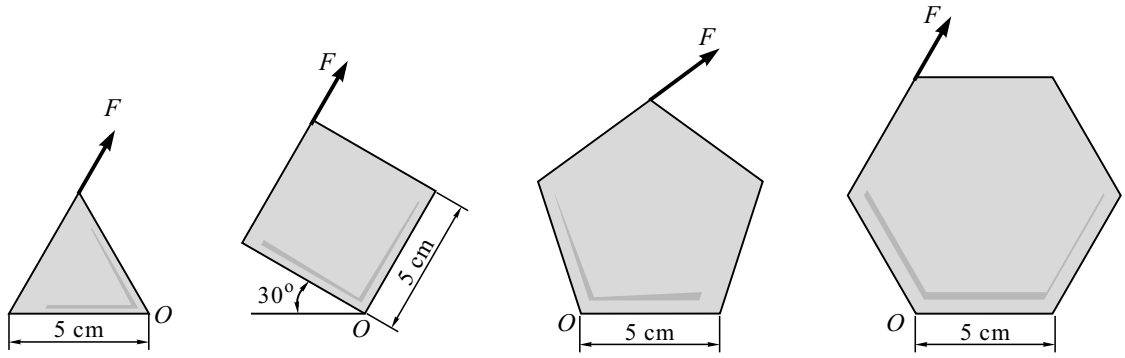

(a) Equilateral Δ (b) Square (c) Pentagon (d) Hexagon

Fig. 1.E5

[***Ans.*** (a) M_O = 324.75 N-cm (b) M_O = 324.75 N-cm (c) M_O = 357 N-cm (d) M_O = 324.75 N-cm]

6. Determine the algebraic sum of moment of four forces acting on circular disc w.r.t. centre O shown in Fig. 1.E6. Radius of circle is 3 cm.

[***Ans.*** 90 N-cm (↺)]

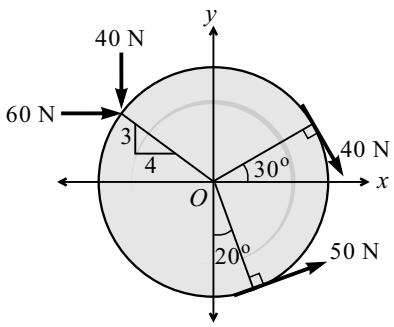

Fig. 1.E6

7. Determine the total moment about O for the given force system (Fig. 1.E7).

[***Ans.*** 1781.44 N-m (↺)]

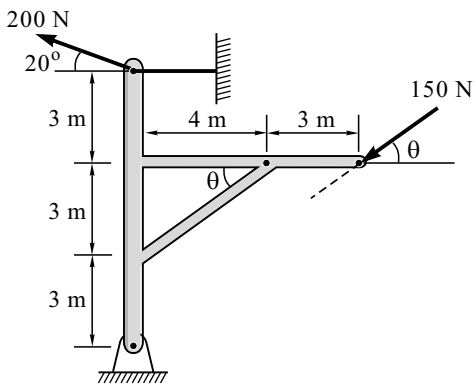

Fig. 1.E7

8. Find the sum of moment about centre O of the force and couple acting on the rectangle plate, as shown in Fig. 1.E8.

[***Ans.*** $M_O = 29.01$ N-m (↻)]

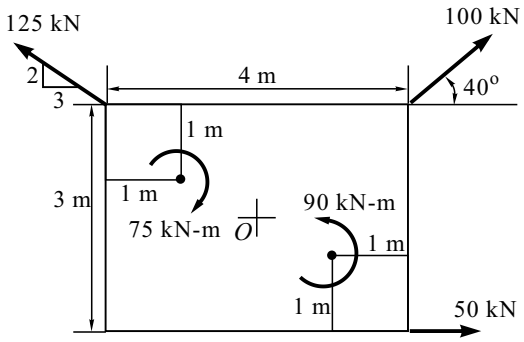

Fig. 1.E8

9. A square plate is subjected by two forces, as shown in Fig. 1.E9. Determine the moment of the couple.

[***Ans.*** $M = 614.71$ kN-m (↻)]

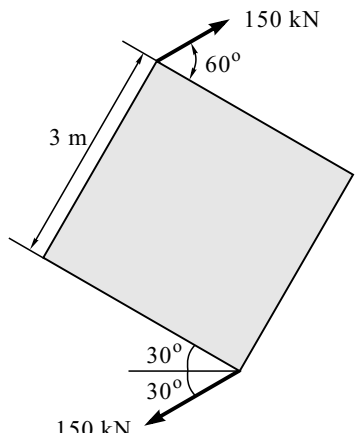

Fig. 1.E9

10. Replace the force 180 N by an equivalent force couple system at A (Fig. 1.E10).

[***Ans.*** At A

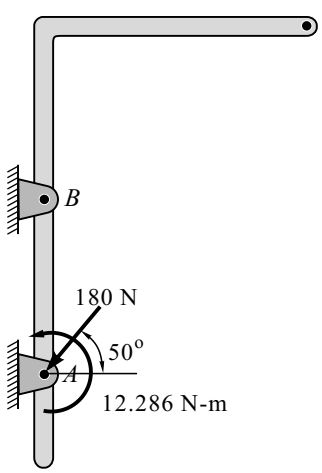

]

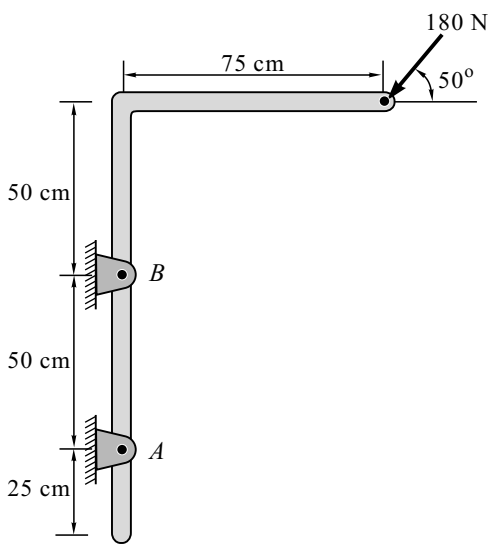

Fig. 1.E10

[II] Review Questions

1. Write the SI units of the following terms :

(a) Length **(b)** Mass **(c)** Time **(d)** Force
(e) Area **(f)** Volume **(g)** Work **(h)** Power
(i) Energy **(j)** Displacement **(k)** Velocity **(l)** Speed
(m) Acceleration **(n)** Moment of force

2. Group the above quantities in vector and scalar.

3. Explain the following terms in brief :

(a) Mechanics **(b)** Statics **(c)** Dynamics **(d)** Kinematics
(e) Kinetics **(f)** Particle **(g)** Rigid body

4. State the following laws :

(a) Newton's first law of motion **(b)** Newton's second law of motion
(c) Newton's third law of motion **(d)** Newton's law of gravitation
(e) Law of parallelogram of force **(f)** Principle of transmisibility of force

5. What is force ? State its description.

6. Classify the force system.

7. What is meant by ?
(a) Resolution of force ?
(b) Composition of force ?
(c) Moment of force ?
(d) Moment of couple ?

[III] Fill in the Blanks

1. _____ is the region which extends in all directions and contains everything in it.

2. _____ is measure of duration between successive event.

3. _____ is the quantity of matter contained in a body.

4. A physical quantity which requires only magnitude for its complete description is known as _____.

5. _____ is a matter having considerable mass but negligible dimension.

[IV] Multiple-choice Questions

Select the appropriate answer from the given options.

1. Mechanics is the branch of _____.

(a) Physics **(b)** Chemistry **(c)** Biology **(d)** Sociology

2. Mechanics of rigid body is the study of _____.

(a) strength of material **(b)** theory of plasticity

(c) theory of elasticity **(d)** statics and dynamics

3. Study of effect of force system acting on particle or rigid body at rest is called _____.

(a) Dynamics **(b)** Kinematics **(c)** Statics **(d)** Kinetics

4. Study of geometry of motion with reference to the cause of motion means _____.

(a) Statics **(b)** Kinematics **(c)** Kinetics **(d)** Strength of material

5. The relation $F = ma$ is based on _____.

(a) Newton's first law **(b)** Newton's second law **(c)** Newton's third law **(d)** D'Alembert principle

6. Any object whose dimension if not involved in analysis then it is assumed as _____.

(a) rigid body **(b)** deformable body **(c)** plastic body **(d)** particle

7. Principle of transmisibility of force if used _____ effect remains unchanged.

(a) internal **(b)** external **(c)** internal and external **(d)** None of these

8. The process of splitting the force into components having same effect is called _____.

(a) composition of force **(b)** vector addition of force

(c) resolution of force **(d)** decomposition of force

9. A turning effect produced by force about a point is called _____.

(a) moment of couple **(b)** moment of torque **(c)** moment of force **(d)** moment of inertia

10. Couple is a _____ vector.

(a) sliding **(b)** fixed **(c)** null **(d)** free

CHAPTER

2

RESULTANT OF SYSTEM OF COPLANAR FORCES

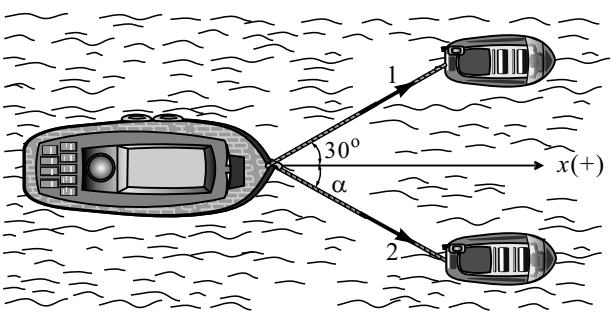

Learning Objectives

After reading this chapter, you will be able to answer the following questions:

- *What is a resultant?*
- *What is meant by equilibrant?*
- *How do you find the resultant of a concurrent force system?*
- *What is Varignon's theorem?*
- *How can we find the resultant of a parallel and a general force system?*

2.1 INTRODUCTION

Resultant force is *a single force which replaces the given force system having the same effect.*

In this chapter, we shall learn to find the resultant of coplanar force system for

1. Concurrent force system,
2. Parallel force system and
3. General force system.

The process of finding the resultant of any number of forces is called the *composition of forces*.

Equilibrant is *a single force* which brings the system to *equilibrium*, thus *equilibrant* is *equal in magnitude*, *opposite in direction* and *collinear to resultant force*.

2.2 RESULTANT OF CONCURRENT FORCE SYSTEM USING METHOD OF RESOLUTION

If the number of forces is more than two then its resultant can be found out conveniently by the *method of resolution*.

Procedure

Step 1 : Find $R_x = \Sigma F_x$

Resolve all the forces along the horizontal x-axis and take the algebraic sum of force components considering proper sign convention (+ve →).

Step 2 : Find $R_y = \Sigma F_y$

Resolve all the forces along the vertical y-axis and take the algebraic sum of force components considering proper sign convention (+ve ↑).

Step 3 : Find R

Magnitude of resultant force is given by $R = \sqrt{(\Sigma F_x)^2 + (\Sigma F_y)^2}$

Step 4 : Find θ

Inclination of the line of action of resultant force with horizontal x-axis is given by

$$\tan\theta = \left|\frac{\Sigma F_y}{\Sigma F_x}\right| \quad \therefore \quad \theta = \tan^{-1}\left(\frac{\Sigma F_y}{\Sigma F_x}\right)$$

Note : Use only positive value of ΣF_x and ΣF_y for finding θ with horizontal x-axis so θ will be always an acute angle (less than 90°).

Step 5 : Position of resultant

Resultant may lie in any of the four quadrants depending on the signs of ΣF_x and ΣF_y

(i) ΣF_x (+ve) and ΣF_y (+ve) Ist Quadrant

(ii) ΣF_x (–ve) and ΣF_y (+ve) IInd Quadrant

(iii) ΣF_x (–ve) and ΣF_y (–ve) IIIrd Quadrant

(iv) ΣF_x (+ve) and ΣF_y (–ve) IVth Quadrant

The point of application of the resultant for concurrent force system is the point of concurrency.

Note :
- If resultant is horizontal then $\Sigma F_y = 0$ and $\Sigma F_x = R$.
- If resultant is vertical then $\Sigma F_x = 0$ and $\Sigma F_y = R$.
- If resultant is zero then $\Sigma F_x = 0$ and $\Sigma F_y = 0$.

Hint : For finding resultant of two concurrent forces, one can prefer parallelogram law or triangle law as discussed in previous chapter.

Solved Problems

Problem 1

Two forces of 400 N and 600 N act at an angle of 60° to each other. Determine the resultant in magnitude and direction if **(i)** the forces have same sense, and **(ii)** the forces have different senses.

Solution

Case (i) : Forces have same senses

Method I : Parallelogram Law

Let both forces be pull forces.

Magnitude of resultant R is given by

$$R = \sqrt{P^2 + Q^2 + 2\,PQ\cos\theta}$$

$$R = \sqrt{(400)^2 + (600)^2 + 2 \times 400 \times 600 \cos 60^\circ}$$

$$R = 871.78 \text{ N}$$

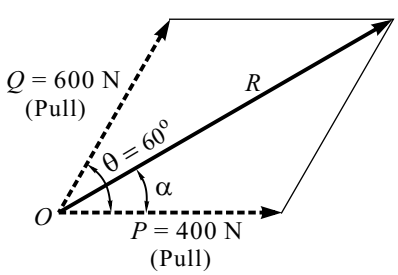

Fig. 2.1(a)

Direction of the resultant

$$\tan\alpha = \frac{Q\sin\theta}{P + Q\cos\theta}$$

$$\tan\alpha = \frac{600\sin 60^\circ}{400 + 600\cos 60^\circ} = 0.742$$

$$\therefore\ \alpha = \tan^{-1}(0.742) = 36.59^\circ$$

Method II : Triangle Law

By cosine rule,

$$R = \sqrt{(400)^2 + (600)^2 - 2 \times 400 \times 600 \cos 120^o}$$

$$R = 871.78 \text{ N}$$

By sine rule

$$\frac{600}{\sin \theta} = \frac{871.78}{\sin 120^o}$$

$$\theta = 36.59^o$$

$\therefore$ resultant $R = 871.78$ N $\left(\measuredangle 36.59^o\right)$

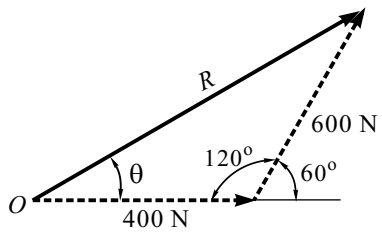

Fig. 2.1(b)

Method III : Resolution of Force

$$\Sigma F_x = 400 + 600 \cos 60^o = 700 \text{ N } (\rightarrow)$$

$$\Sigma F_y = 600 \sin 60^o = 519.62 \text{ N } (\uparrow)$$

Magnitude of the resultant R

$$R = \sqrt{(\Sigma F_x)^2 + (\Sigma F_y)^2}$$

$$R = \sqrt{(700)^2 + (519.62)^2}$$

$$R = 871.78 \text{ N}$$

Inclination of the resultant θ

$$\tan \theta = \frac{\Sigma F_y}{\Sigma F_x} \Rightarrow \theta = \tan^{-1}\left(\frac{519.62}{700}\right)$$

$$\theta = 36.59^o$$

$\therefore$ resultant $R = 871.78$ N $\left(\measuredangle 36.59^o\right)$

Case (ii) : When both forces have different senses

Method I : Parallelogram Law

Let P be a pull force and Q be push force.

Convert Q as a pull force by extending its line of action.
($\because$ Principle of transmissibility of force)

$$\theta = 180^o - 60^o = 120^o$$

Magnitude of the resultant

$$R = \sqrt{P^2 + Q^2 + 2\,PQ \cos \theta}$$

$$R = \sqrt{400^2 + 600^2 + 2 \times 400 \times 600 \cos 120^o}$$

$\therefore$ $R = 529.15$ N

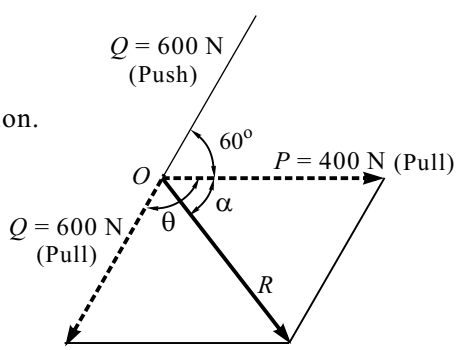

Fig. 2.1(c)

Direction of the resultant

$$\tan \alpha = \frac{Q \sin \theta}{P + Q \cos \theta} = \frac{600 \sin 120^o}{400 + 600 \cos 120^o} = 5.196$$

$$\therefore \alpha = \tan^{-1}(5.196) = 79.11^o$$

Method II : Triangle Law

By cosine rule,

$$R = \sqrt{(400)^2 + (600)^2 - 2 \times 400 \times 600 \cos 60^o}$$

$$R = 529.15 \text{ N}$$

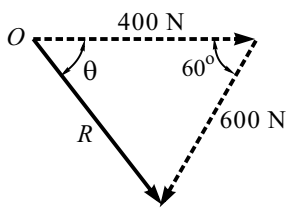

Fig. 2.1(d)

By sine rule,

$$\frac{600}{\sin \theta} = \frac{529.15}{\sin 60^o}$$

$$\sin \theta = 6.982$$

$$\theta = 79.11^o$$

$\therefore$ resultant $R = 529.15$ N $\left(\searrow 79.11^o\right)$

Method III : Resolution of Force

$$\Sigma F_x = 400 - 600 \cos 60^o$$

$$\Sigma F_x = 100 \text{ N } (\rightarrow)$$

$$\Sigma F_y = -600 \sin 60^o = -519.62$$

$$\Sigma F_y = 519.62 \text{ N } (\downarrow)$$

Magnitude of the resultant R

$$R = \sqrt{(\Sigma F_x)^2 + (\Sigma F_y)^2}$$

$$R = \sqrt{(100)^2 + (519.62)^2}$$

$$R = 529.15 \text{ N}$$

Inclination of the resultant θ

$$\tan \theta = \frac{\Sigma F_y}{\Sigma F_x}$$

$$\theta = \tan^{-1}\left(\frac{519.62}{100}\right)$$

$$\theta = 79.11^o$$

$\therefore$ resultant $R = 529.15$ N $\left(\searrow 79.11^o\right)$

Problem 2

A car is pulled by means of two ropes as shown in Fig. 2.2(a). The tension in one rope is P = 2.6 kN. If the resultant of two forces applied at O is directed along the x-axis of the car. Find the tension in the other rope and magnitude of the resultant.

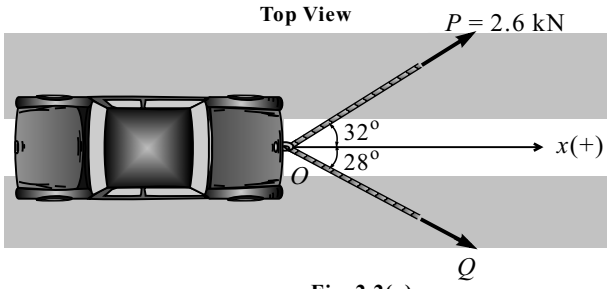

Fig. 2.2(a)

Solution

(i) Method I : Parallelogram Law

By parallelogram law, we have

$$\tan 28^\circ = \frac{2.6 \sin 60^\circ}{Q + 2.6 \cos 60^\circ}$$

$$Q \tan 28^\circ + 2.6 \cos 60^\circ \times \tan 28^\circ = 2.6 \sin 60^\circ$$

$$\therefore \; Q = 2.934 \text{ kN}$$

$$R = \sqrt{(2.6)^2 + (2.934)^2 + 2 \times 2.6 \times 2.934 \cos 60^\circ}$$

$$\therefore \; R = 4.8 \text{ kN } (\rightarrow)$$

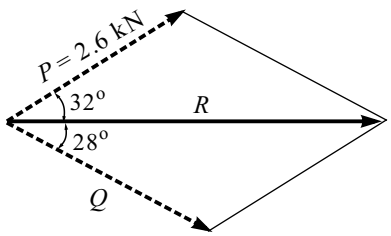

Fig. 2.2(b)

(ii) Method II : Triangle Law

By sine rule,

$$\frac{2.6}{\sin 28^\circ} = \frac{Q}{\sin 32^\circ} = \frac{R}{\sin 120^\circ}$$

$$Q = \frac{2.6 \sin 32^\circ}{\sin 28^\circ} \qquad R = \frac{2.6 \sin 120^\circ}{\sin 28^\circ}$$

$$\therefore \; Q = 2.934 \text{ kN } (\searrow 28^\circ) \text{ and } R = 4.796 \text{ kN } (\rightarrow)$$

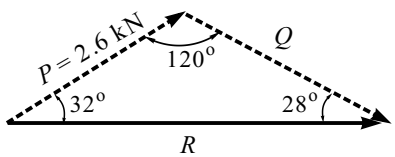

Fig. 2.2(c)

(iii) Method III : Resolution of Force

$\because$ resultant is horizontal,

$$\Sigma F_y = 0$$

$$2.6 \sin 32^\circ - Q \sin 28^\circ = 0$$

$$Q = 2.934 \text{ kN } (\searrow 28^\circ)$$

$\because$ resultant is horizontal,

$$R = \Sigma F_x$$

$$R = 2.6 \cos 32^\circ + 2.934 \cos 28^\circ$$

$$\therefore \; R = 4.796 \text{ kN } (\rightarrow)$$

Problem 3

Find the magnitude of forces F_1 and F_2 if they act at right angle and their resultant is $\sqrt{34}$ N. If they act at an angle 60°, their resultant is 7 N.

Solution

(i) By parallelogram law, we have

Resultant $R = \sqrt{F_1^2 + F_2^2 + 2\,F_1F_2 \cos\theta}$

$$\sqrt{34} = \sqrt{F_1^2 + F_2^2 + 2\,F_1F_2 \cos 90^o}$$

$$34 = F_1^2 + F_2^2 \qquad \text{... (I)}$$

$$7 = \sqrt{F_1^2 + F_2^2 + 2\,F_1F_2 \cos 60^o}$$

$$49 = F_1^2 + F_2^2 + 2\,F_1F_2 \cos 60^o \qquad \text{... (II)}$$

(ii) Putting the value of Eq. (I) in Eq. (II),

$$49 = 34 + 2\,F_1F_2 \cos 60^o$$

$$49 = 34 + F_1F_2$$

$$F_1F_2 = 15$$

$$\therefore \quad F_1 = \frac{15}{F_2} \qquad \text{... (III)}$$

Putting the value in Eq. (I), we get

$$34 = \left(\frac{15}{F_2}\right)^2 + F_2^2$$

$$34F_2^2 = F_2^4 + 225$$

$$F_2^4 - 34F_2^2 + 225 = 0$$

Solving the quadratic equation, we get

$F_2 = 5$ N and $F_2 = 3$ N

From Eq. (III), we get

If $F_2 = 5$ N then $F_1 = 3$ N

If $F_2 = 3$ N then $F_1 = 5$ N

Problem 4

To move a boat uniformly across the river at a given speed, a resultant force R = 520 N is required. Two men are pulling it with force P and Q by means of ropes. The ropes make an angle of 30° and 40° respectively with the sides of the river as shown in Fig. 2.4 . **(i)** Determine the force P and Q, **(ii)** If $\theta_1 = 30^o$, find the value of θ_2 such that the force in the rope Q is minimum. What is the minimum force Q?

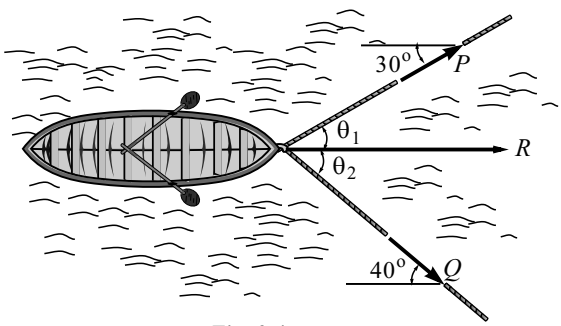

Fig. 2.4

Solution

(i) $R_x = \Sigma F_x$

$520 = P \cos 30^o + Q \cos 40^o$

$520 = 0.866\, P + 0.766\, Q$ ... (I)

$\Sigma F_y = 0$

$0 = P \sin 30^o - Q \sin 40^o$

$0 = 0.5\, P - 0.6428\, Q$ ... (II)

Solving Eqs. (I) and (II), we get

$\therefore\ P = 355.7$ N and $Q = 276.68$ N

(ii) For the force Q to be minimum, forces P and Q should be perpendicular to each other.

$\theta_1 + \theta_2 = 90^o$ ($\theta_1 = 30^o$ given)

$\therefore\ \theta_2 = 60^o$

$R_x = \Sigma F_x$

$520 = P \cos 30^o + Q_{min} \cos 60^o$

$520 = 0.866\, P + 0.5\, Q_{min}$ ... (III)

$\Sigma F_y = 0$

$0 = P \sin 30^o - Q_{min} \sin 60^o$

$0 = 0.5\, P - 0.866\, Q_{min}$ ... (IV)

Solving Eqs.(III) and (IV), we get

$\therefore\ Q_{min} = 260$ N

Problem 5

An eye bolt is being pulled from the ground by three forces as shown in Fig. 2.5(a). Determine the equilibrant on the eye bolt which resists to come out.

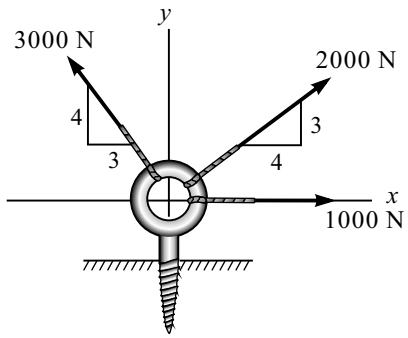

Fig. 2.5(a)

Note : The direction of force is defined by its slope.

Solution

(i)

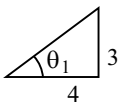

$\tan\theta_1 = \frac{3}{4} \quad \therefore\ \theta_1 = 36.87^o$

(ii)

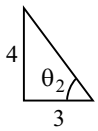

$\tan\theta_2 = \frac{4}{3} \quad \therefore\ \theta_2 = 53.13^o$

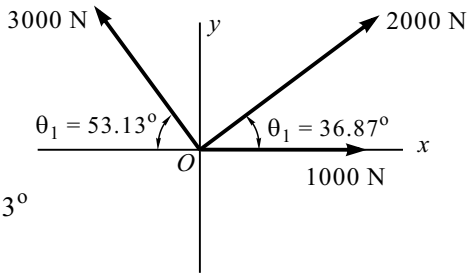

Fig. 2.5(b)

(iii) $\Sigma F_x = 1000 + 2000 \cos 36.87^o - 3000 \cos 53.13^o$

$\therefore\ \Sigma F_x = 799.99 \approx 800 \text{ N } (\rightarrow)$

(iv) $\Sigma F_y = 2000 \sin 36.87^o + 3000 \sin 53.13^o$

$\therefore\ \Sigma F_y = 3600 \text{ N } (\uparrow)$

(v) Magnitude of the resultant R

$R = \sqrt{(800)^2 + (3600)^2}$

$\therefore\ R = 3687.82 \text{ N}$

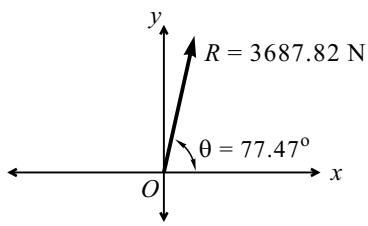

Fig. 2.5(c)

(vi) Inclination of the resultant θ

$\theta = \tan^{-1}\left(\frac{3600}{800}\right)$

$\therefore\ \theta = 77.47^o$

(vii) Position of the resultant [refer to Fig. 2.5(c)]

$\because \Sigma F_x$ is +ve $(\rightarrow)$ and ΣF_y is +ve $(\uparrow)$

$\therefore$ resultant force R lies in Ist quadrant.

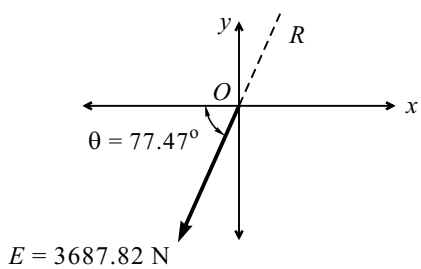

Fig. 2.5(d)

(viii) Since the equilibrant is equal in magnitude, opposite in direction and collinear to that of resultant force.

$\therefore$ equilibrant E lies in the IIIrd quadrant. [refer to Fig. 2.5(d)]

Problem 6

Forces of 7 kN, 10 kN, 10 kN and 3 kN, respectively act at one of the angular points of a regular pentagon towards the other four point taken in order. Find their resultant completely.

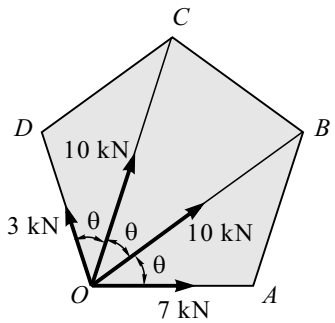

Fig. 2.6(a)

Solution

A regular pentagon is a polygon having five sides of equal length. The point of intersection of two sides is called an angular point.
Therefore, a pentagon has five angular points.
Refer to Fig. 2.6(a).

Included angles of any regular polygon

$$= 180^o - \frac{360^o}{\text{Number of sides}}$$

For a pentagon, the included angle

$$= 180^o - \frac{360^o}{5} = 108^o$$

$$\therefore \ \theta = \frac{108^o}{3} = 36^o$$

Represent the concurrent forces as shown in Fig. 2.6(b).

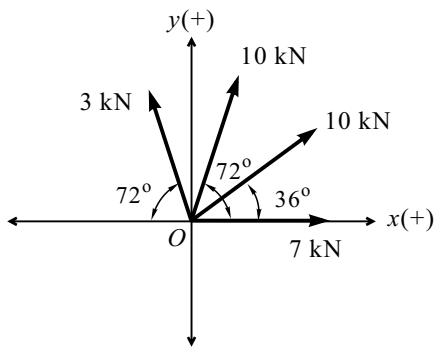

Fig. 2.6(b)

(i) $\Sigma F_x = 7 + 10 \cos 36^o + 10 \cos 72^o - 3 \cos 72^o$

$\Sigma F_x = 17.25 \text{ kN } (\rightarrow)$

(ii) $\Sigma F_y = 10 \sin 36^o + 10 \sin 72^o + 3 \sin 72^o$

$\Sigma F_y = 18.24 \text{ kN } (\uparrow)$

(iii) Magnitude of the resultant R

$$R = \sqrt{(\Sigma F_x)^2 + (\Sigma F_y)^2}$$

$$R = \sqrt{(17.25)^2 + (18.24)^2}$$

$$\therefore R = 25.10 \text{ kN}$$

(iv) Inclination of the resultant θ

$$\theta = \tan^{-1}\left(\frac{\Sigma F_y}{\Sigma F_x}\right) \Rightarrow \theta = \tan^{-1}\left(\frac{18.24}{17.25}\right)$$

$$\therefore \theta = 46.59^o$$

(v) Position of the resultant is shown in Fig. 2.6(c).

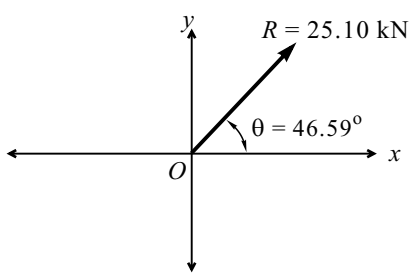

Fig. 2.6(c)

Problem 7

The top end of a vertical boot is connected by two cables having tension T_1 = 500 N and T_2 = 1500 N as shown in Fig. 2.7(a). The third cable AB is used as a guy wire. Determine the tension in cable AB if resultant of the three concurrent forces acting at A is vertical. Also find the resultant.

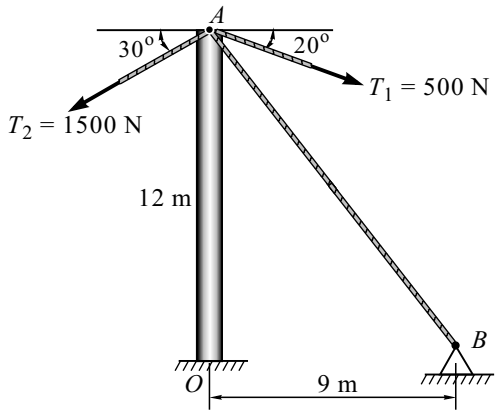

Fig. 2.7(a)

Solution

Figure 2.7(b) shows the concurrent force system. The tension in cable AB (T_3) will try to exert a pull at A.

It is given that the resultant of the force system is vertical. It means that algebraic sum of all the force component in horizontal x-axis direction must be zero.

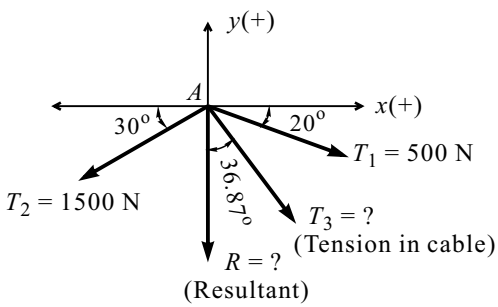

Fig. 2.7(b)

(i) $\Sigma F_x = 0$

$$500 \cos 20^o - 1500 \cos 30^o + T_3 \sin 36.87^o = 0$$

$$\therefore T_3 = 1381.98 \text{ N}$$

(ii) $\because$ resultant is vertical,

$$R = \Sigma F_y$$

$$R = -500 \sin 20^o - 1500 \sin 30^o - 1381.98 \cos 36.87^o$$

$$R = -2026.59 \text{ N}$$

$$\therefore R = 2026.59 \text{ N } (\downarrow)$$

Problem 8

Determine the magnitude and direction of forces F_1 and F_2, shown in Fig. 2.8 when the resultant of the given force system is found to be 800 N along the positive x-axis.

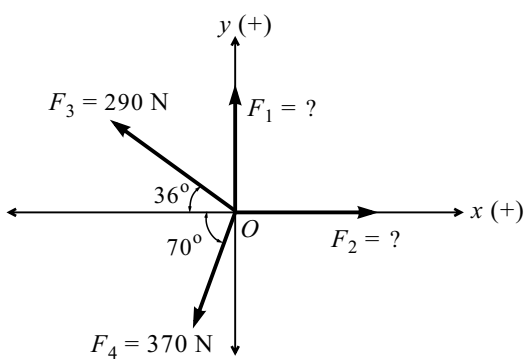

Fig. 2.8

Solution

(i) $\Sigma F_x = 800$

$$F_2 - 290 \cos 36^o - 370 \cos 70^o = 800$$

$$\therefore F_2 = 1161.2 \text{ N } (\rightarrow)$$

(ii) $\Sigma F_y = 0$

$$F_1 + 290 \sin 36^o - 370 \sin 70^o = 0$$

$$\therefore F_1 = 177.23 \text{ N } (\uparrow)$$

Problem 9

A force R = 25 kN acting at O has three components F_A, F_B and F_C as shown in Fig. 2.9(a). If F_C = 20 kN, find F_A and F_B.

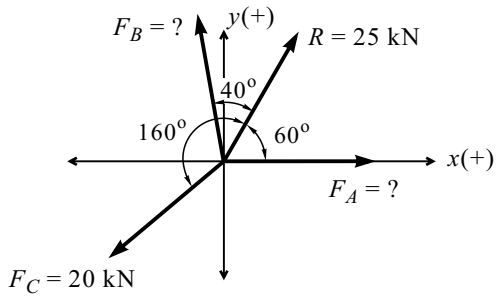

Fig. 2.9(a)

Solution

Refer to Fig. 2.9(b).

(i) To find F_B

$R_y = \Sigma F_y$

$25 \sin 60^\circ = F_B \sin 80^\circ - 20 \sin 40^\circ$

$\therefore F_B = 35.04$ kN

(ii) To find F_A

$R_x = \Sigma F_x$

$25 \cos 60^\circ = F_A - 35.04 \cos 80^\circ - 20 \cos 40^\circ$

$\therefore F_A = 33.91$ kN

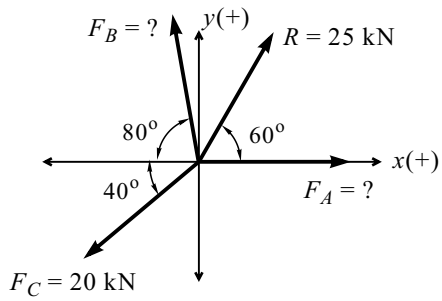

Fig. 2.9(b)

Problem 10

Find the force F_4 completely so as to give the resultant of the system of forces as shown in Fig. 2.10(a).

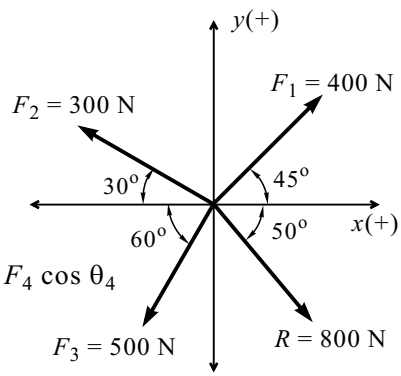

Fig. 2.10(a)

Solution

Assume F_4 in Ist quadrant making angle θ_4 with x-axis.

(i) $R_x = \Sigma F_x$

$800 \cos 50^\circ = 400 \cos 45^\circ - 300 \cos 30^\circ - 500 \cos 60^\circ + F_4 \cos \theta_4$

$\therefore F_4 \cos \theta_4 = 741.19$ N $(\rightarrow)$ ... (I)

(ii) $R_y = \Sigma F_y$

$-800 \sin 50^\circ = 400 \sin 45^\circ + 300 \sin 30^\circ - 500 \sin 60^\circ + F_4 \sin \theta_4$

$F_4 \sin \theta_4 = -612.66$ N

$\therefore F_4 \sin \theta_4 = 612.66$ N $(\downarrow)$ ... (II)

(iii) Dividing Eq. (II) by Eq. (I),

$$\therefore \tan \theta_4 = \frac{612.66}{741.19} \Rightarrow \theta_4 = 39.58^\circ$$

(iv) From Eq. (I), we get

$$F_4 = \frac{741.19}{\cos 39.58^\circ} \quad \therefore F_4 = 961.67 \text{ N}$$

(v) Position of F_4 [Refer to Fig. 2.10(b)].

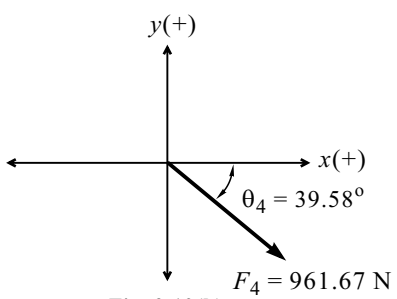

Fig. 2.10(b)

Problem 11

The striker of a carom board lying on the board is being pulled by four players as shown in Fig. 2.11(a). The players are sitting exactly at the centre of the four sides. Determine the resultant of forces in magnitude and direction.

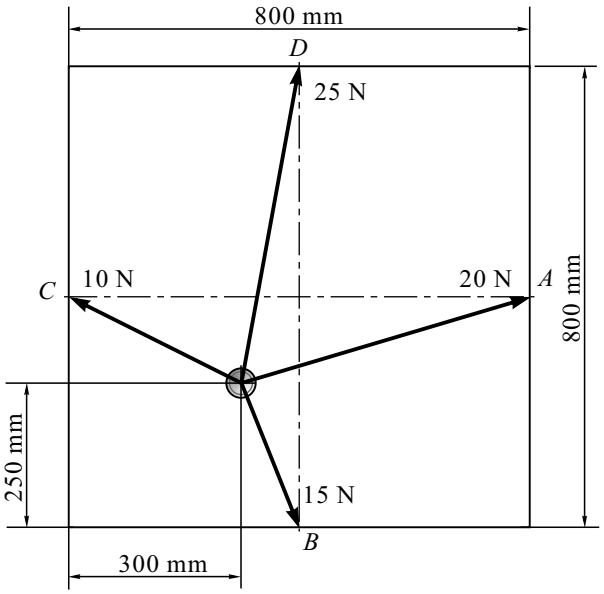

Fig. 2.11(a)

Solution

(i) $\tan\theta_1 = \dfrac{150}{500} \quad \therefore \theta_1 = 16.7^o$

$\tan\theta_2 = \dfrac{550}{100} \quad \therefore \theta_2 = 79.7^o$

$\tan\theta_3 = \dfrac{150}{300} \quad \therefore \theta_2 = 26.56^o$

$\tan\theta_4 = \dfrac{250}{100} \quad \therefore \theta_2 = 68.2^o$

(ii) $\Sigma F_x = 20\cos\theta_1 + 25\cos\theta_2 - 10\cos\theta_3 + 15\cos\theta_4$

$\Sigma F_x = 20.25 \text{ N } (\rightarrow)$

(iii) $\Sigma F_y = 20\sin\theta_1 + 25\sin\theta_2 + 10\sin\theta_3 - 15\sin\theta_4$

$\therefore \Sigma F_y = 20.89 \text{ N } (\uparrow)$

(iv) $R = \sqrt{(20.25)^2 + (20.89)^2}$

$\therefore R = 29.09 \text{ N}$

(v) $\theta = \tan^{-1}\left(\dfrac{20.89}{20.25}\right)$

$\therefore \theta = 45.89^o$

(vi) Position of the resultant R is shown in Fig. 2.11(c).

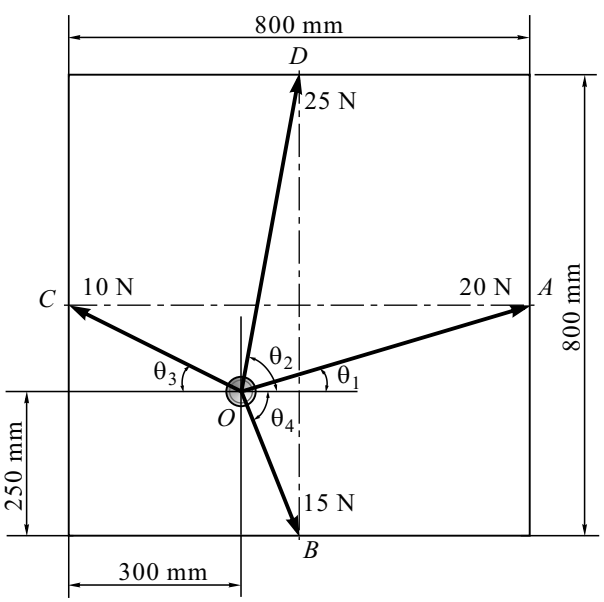

Fig. 2.11(b)

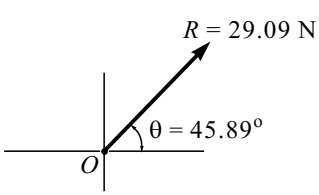

Fig. 2.11(c)

Problem 12

Determine the resultant of the three forces originating at the point (3, –3) and passing through the point indicated: 126 N through (8, 6), 183 N through (2, –5) and 269 N through (–6, 3).

Solution

To find θ_1, θ_2 and θ_3.

$$\tan\theta = \left|\frac{y_2 - y_1}{x_2 - x_1}\right| \quad \text{(slope)}$$

$$\theta_1 = \tan^{-1}\left|\frac{9}{5}\right| \quad \therefore \theta_1 = 60.95^\circ$$

$$\theta_2 = \tan^{-1}\left|\frac{-2}{-1}\right| \quad \therefore \theta_2 = 63.44^\circ$$

$$\theta_3 = \tan^{-1}\left|\frac{6}{-9}\right| \quad \therefore \theta_3 = 33.69^\circ$$

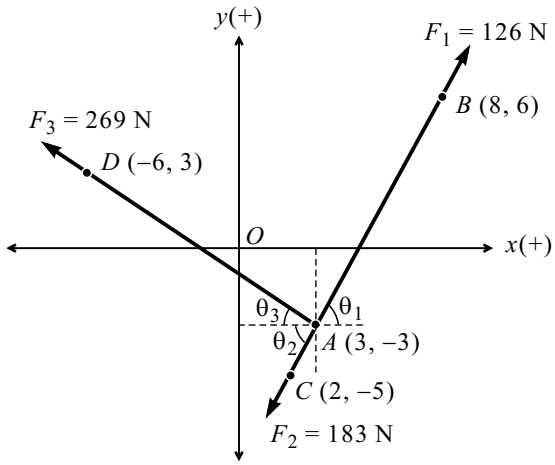

Fig. 2.12(a)

(i) $\Sigma F_x = 126\cos 60.95^\circ - 183\cos 63.44^\circ - 269\cos 33.69^\circ$

$\Sigma F_x = -244.47$ N

$\therefore \Sigma F_x = 244.47$ N (←)

(ii) $\Sigma F_y = 126\sin 60.95^\circ - 183\sin 63.44^\circ + 269\sin 33.69^\circ$

$\Sigma F_y = 95.68$ N (↑)

(iii) Magnitude of the resultant R

$$R = \sqrt{(244.47)^2 + (95.68)^2}$$

$\therefore R = 262.53$ N

(iv) Inclination of the resultant θ

$$\theta = \tan^{-1}\left(\frac{95.68}{244.47}\right)$$

$\therefore \theta = 21.37^\circ$

(v) Position of the resultant w.r.t. point A is as shown in Fig. 2.12(b).

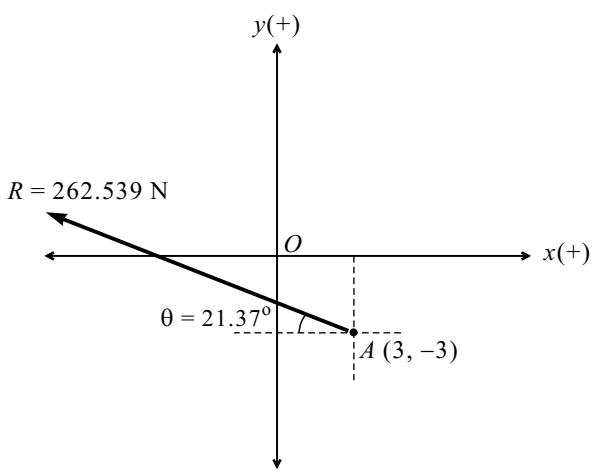

Fig. 2.12(b)

Problem 13

A body is acted upon by forces as given below. Find the resultant of these forces.

(i) 50 N acting due East

(ii) 100 N 50° North of East

(iii) 75 N 20° West of North

(iv) 120 N acting 30° South of West

(v) 90 N acting 25° West of South

(vi) 80 N acting 40° South of East

All forces are acting from the point *O*.

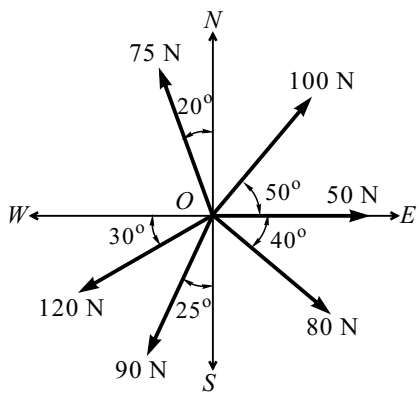

Fig. 2.13(a)

Solution

Draw the sketch of all forces acting at the point *O*.

Show geographical axis North (*N*), South (*S*), East (*E*) and West (*W*). [Refer to Fig. 2.13(a)]

(50° North of East means measure an angle of 50° from East toward North. Similar guideline is to be followed for all forces.)

(i) $\Sigma F_x = 50 + 100 \cos 50^\circ - 75 \sin 20^\circ - 120 \cos 30^\circ - 90 \sin 25^\circ + 80 \cos 40^\circ$

$\therefore \Sigma F_x = 7.95 \text{ N } (\rightarrow)$

(ii) $\Sigma F_y = 100 \sin 50^\circ + 75 \cos 20^\circ - 120 \sin 30^\circ - 90 \cos 25^\circ - 80 \sin 40^\circ$

$\Sigma F_y = -45.91 \text{ N}$

$\therefore \Sigma F_y = 45.91 \text{ N } (\downarrow)$

(iii) $R = \sqrt{(7.95)^2 + (45.91)^2}$

$R = 46.59 \text{ N}$

(iv) $\theta = \tan^{-1}\left(\frac{45.91}{7.95}\right)$

$\therefore \theta = 80.18^\circ$

(v) Position of the resultant w.r.t. the point *O* is as shown in Fig. 2.13(b).

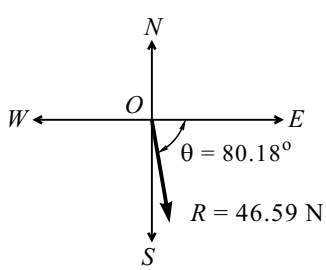

Fig. 2.13(b)

Problem 14

For the system shown, determine

(i) the required value of α if resultant of three forces is to be vertical, and

(ii) the corresponding magnitude of the resultant.

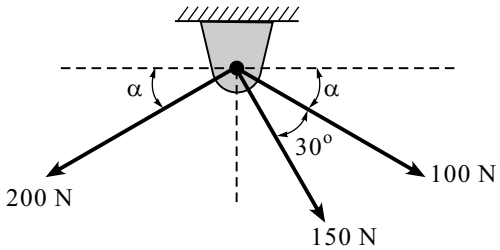

Fig. 2.14

Solution

(i) Since the resultant is vertical,

$$\Sigma F_x = 0$$

$$100 \cos \alpha + 150 \cos (\alpha + 30) - 200 \cos \alpha = 0$$

$$150(\cos \alpha \cos 30^o - \sin \alpha \sin 30^o) - 100 \cos \alpha = 0$$

$$130 \cos \alpha - 75 \sin \alpha - 100 \cos \alpha = 0$$

$$30 \cos \alpha - 75 \sin \alpha = 0$$

$$75 \sin \alpha = 30 \cos \alpha$$

$$\frac{\sin \alpha}{\cos \alpha} = \frac{30}{75} = \tan \alpha$$

$$\therefore \alpha = 21.8^o$$

(ii) ∵ resultant is vertical,

$$R = \Sigma F_y$$

$$R = -100 \sin \alpha - 150 \sin (\alpha + 30) - 200 \sin \alpha = 0$$

$$R = -100 \sin 21.8^o - 150 \sin (21.8 + 30)^o - 200 \sin 21.8^o = 0$$

$$R = -229.29 \text{ N}$$

$$\therefore R = 229.29 \text{ N } (\downarrow)$$

2.3 VARIGNON'S THEOREM

It states that *the moment of resultant of all the forces in a plane about any point is equal to the algebraic sum of moment of all the forces about the same point.*

Case : The moment of force in a plane about any point is equal to the sum of the moments of components of the force about the same point.

$$R \times d = P \times d_1 + Q \times d_2$$

Proof : Consider a force R acting at a point O. Say P and Q are the resolved components of force R (as shown in Fig. 2.3-i). Let R, P and Q form an angle θ, θ_1, θ_2 respectively with the x-axis.

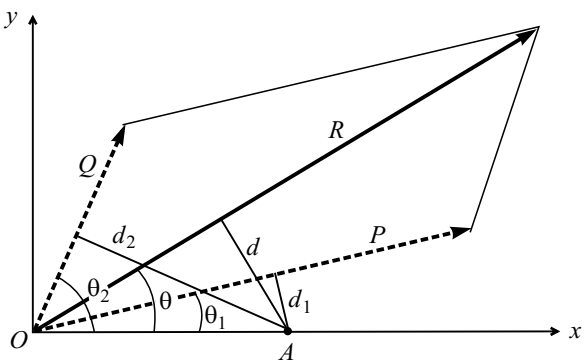

Fig. 2.3-i

The moment of R about an arbitrary point A is $R \times d$ where d is the perpendicular distance from A to the line of action of R. Similarly, the moment of P and Q about point A are $P \times d_1 + Q \times d_2$ respectively, where d_1 and d_2 are perpendicular distances from A to the line of action of P and Q respectively.

Since R is the resultant of P and Q, it follows that the sum $P_y + Q_y$ of the y component of two forces P and Q is equal to the y component R_y of their resultant R.

$$\text{i.e., } R_y = P_y + Q_y$$

$$R_y = R \sin\theta, \quad P_y = P \sin\theta_1 \quad \text{and} \quad Q_y = Q \sin\theta_2$$

$$\therefore R \sin\theta = P \sin\theta_1 + Q \sin\theta_2$$

Multiplying both sides by the length OA,

$$R \times OA \sin\theta = P \times OA \sin\theta_1 + Q \times OA \sin\theta_2$$

$$\text{But } OA \sin\theta = d, \; OA \sin\theta_1 = d_1 \text{ and } OA \sin\theta_2 = d_2$$

$$\therefore R \times d = P \times d_1 + Q \times d_2$$

Hence proved.

Note : Varignon's theorem is used for determining the *position of the resultant of a parallel and general force system.*

2.4 RESULTANT OF A PARALLEL FORCE SYSTEM

Procedure

Step 1 : Find resultant $R = \Sigma F$

Take the algebraic sum of all the parallel forces considering proper sign convention (+ve↑ / –ve ↓).

Step 2 : Find ΣM_O

Take the algebraic sum moment of forces about a point (say O) considering proper sign convention (+ve ↺ / –ve ↻).

Step 3 : Apply Varignon's theorem

$\Sigma M_O = R \times d$ (where d is the perpendicular distance between line of action of R and reference point O).

Step 4 : Position of resultant w.r.t. point O

Resultant may lie to the right or left of the reference point O at a distance d, depending on the sign of ΣF and ΣM_O.

(i) $\Sigma F \uparrow$ and ΣM_O (+ve ↺)

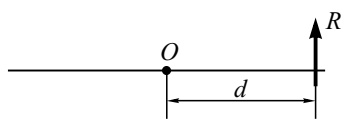

(ii) $\Sigma F \downarrow$ and ΣM_O (+ve ↺)

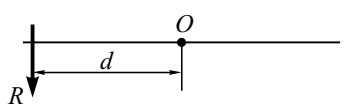

(iii) $\Sigma F \uparrow$ and ΣM_O (–ve ↻)

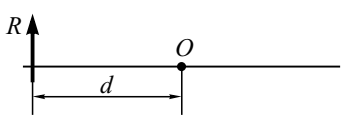

(iv) $\Sigma F \downarrow$ and ΣM_O (–ve ↻)

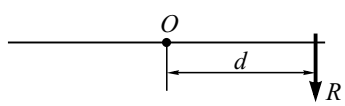

Note : Resultant of a parallel force system may be

- only a single resultant force R (translational motion),
- only a single resultant couple M (rotational motion), or
- both a single resultant force R and a single resultant couple M (translational and rotational motion together).

Solved Problems

Problem 15

Find the resultant of the following force system and also find the equivalent force and couple at point A of the same force system shown in Fig. 2.15(a).

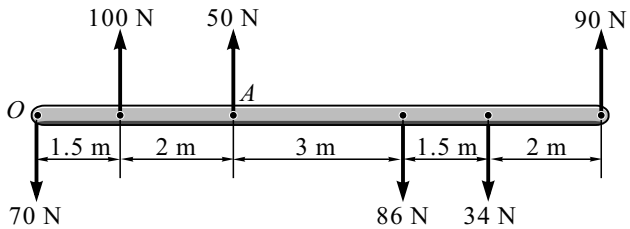

Fig. 2.15(a)

Solution

Case (i)

(i) $R = \Sigma F = -70 + 100 + 50 - 86 - 34 + 90$

$\therefore R = 50 \text{ N } (\uparrow)$

(ii) $\Sigma M_O = 100 \times 1.5 + 50 \times 3.5 - 86 \times 6.5 - 34 \times 8 + 90 \times 10$

$\therefore \Sigma M_O = 394 \text{ N-m } (\circlearrowleft)$

(iii) Applying Varignon's theorem, we have

$\Sigma M_O = R \times d$

$\therefore d = \dfrac{\Sigma M_O}{R} = \dfrac{394}{50}$

$\therefore d = 7.88 \text{ m}$

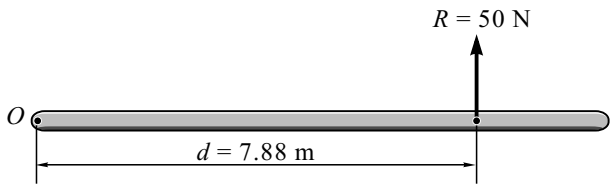

Fig. 2.15(b)

(v) Position of the resultant w.r.t. point O is as shown in Fig. 2.15(b).

Case (ii)

(i) $R = \Sigma F = -70 + 100 + 50 - 86 - 34 + 90$

$\therefore R = 50 \text{ N } (\uparrow)$

(ii) $\Sigma M_A = 70 \times 3.5 - 100 \times 2 - 86 \times 3 - 34 \times 4.5 + 90 \times 6.5$

$\therefore \Sigma M_A = 219 \text{ N-m } (\circlearrowleft)$

(iii) Equivalent force and couple at point A of the force system is a single force $R = 50$ N $(\uparrow)$ and a couple $C = \Sigma M_A = 219$ N-m $(\circlearrowleft)$ shown in Fig. 2.15(c).

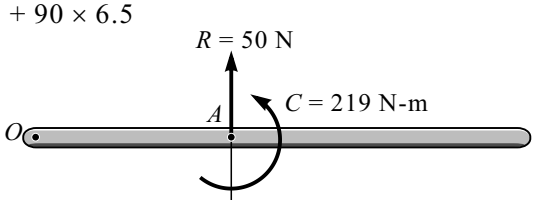

Fig. 2.15(c)

Case (ii) : Alternate Method

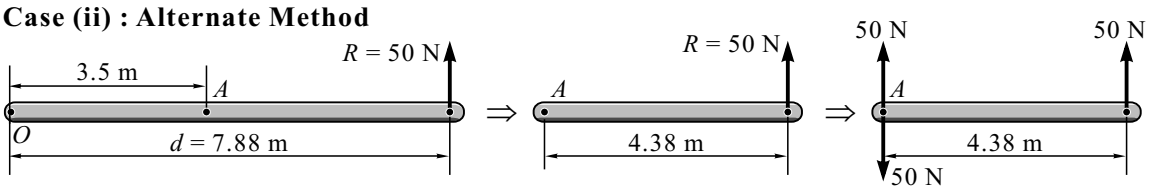

(From Case I) **Fig. 2.15(d)**

$\therefore$ Equivalent force and couple at point A = ($C = 50 \times 4.38 = 219$ N-m)

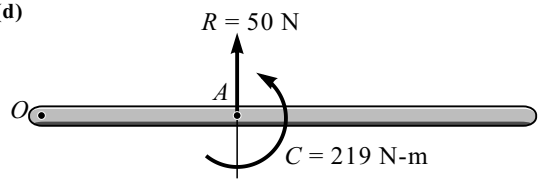

Fig. 2.15(e)

Problem 16

Replace the force system acting on a bar as shown in Fig. 2.16(a) by a single force.

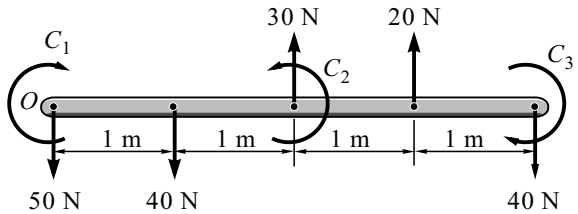

Fig. 2.16(a)

C_1 = 85 N-m
C_2 = 65 N-m
C_3 = 90 N-m

Solution

(i) $R = \Sigma F = -50 - 40 + 30 + 20 - 40$

$R = -80$ N

$R = 80$ N (↓)

(ii) $\Sigma M_O = -40 \times 1 + 30 \times 2 + 20 \times 3 - 40 \times 4 - 85 + 65 - 90$

$\Sigma M_O = -190$ N-m

$\therefore \Sigma M_O = 190$ N-m (↺)

(iii) Applying Varignon's theorem

$\Sigma M_O = R \times d$

$d = \dfrac{\Sigma M_O}{R} = \dfrac{190}{80}$

$\therefore d = 2.375$ m

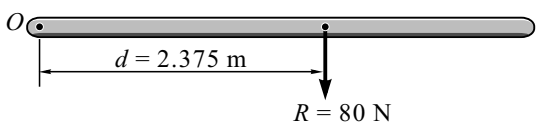

Fig. 2.16(b)

(iv) Position of resultant w.r.t. point O is shown in Fig. 2.16(b).

Problem 17

Find the resultant of given active forces [Fig. 2.17(a)] w.r.t. point B.

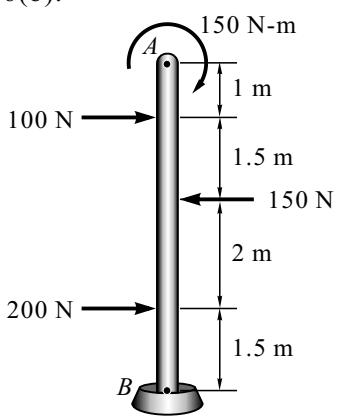

Fig. 2.17(a)

Solution

(i) $R = \Sigma F = 100 - 150 + 200$

$\therefore R = 150$ N (→)

(ii) $\Sigma M_B = -150 - 100 \times 5 + 150 \times 3.5 - 200 \times 1.5$

$\Sigma M_B = -425$ N-m

$\therefore \Sigma M_B = 425$ N-m (↻)

(iii) By Varignon's theorem, we have

$\Sigma M_B = R \times h$

$h = \dfrac{425}{150}$

$\therefore h = 2.83$ m

(iv) Position of resultant w.r.t. point B is as shown in Fig. 2.17(b).

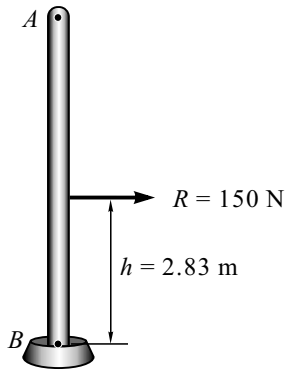

Fig. 2.17(b)

Problem 18

Find the resultant of the force system shown in Fig. 2.18.

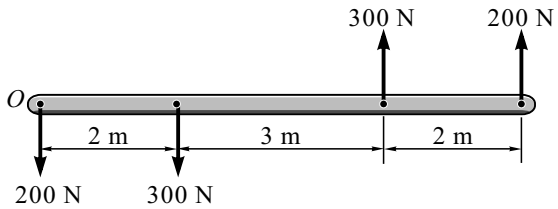

Fig. 2.18

Solution

(i) $R = \Sigma F = -200 - 300 + 300 + 200$

$R = 0$

$\therefore$ the resultant force $R = 0$

$\because$ the resultant force is zero, the resultant may be a couple.

(ii) To find the value of the couple, take moments of all forces about point O.

$\Sigma M_O = -300 \times 2 + 300 \times 5 + 200 \times 7$

$\therefore \Sigma M_O = 2300$ N-m (↺)

(iii) Here, the resultant of the given force system is a couple of 2300 N-m (↺) and resultant force is zero.

Problem 19

Resolve the force $F = 900$ N acting at B as shown in Fig. 2.19(a) into parallel component at O and A.

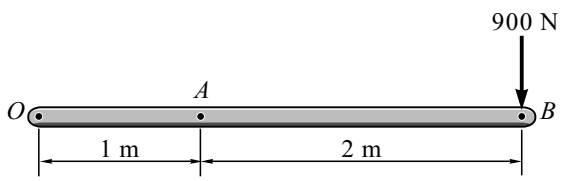

Fig. 2.19(a)

Solution

(i) Assume F_1 and F_2 as the parallel component of forces acting vertical at O and A respectively as shown in Fig. 2.19(b).

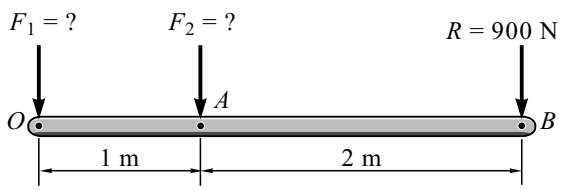

Fig. 2.19(b)

(ii) Taking moment about O and applying Varignon's theorem, we have

$-900 \times 3 = F_1 \times 0 - F_2 \times 1$

$\therefore F_2 = 2700$ N(↓)

(iii) Taking moment about A and applying Varignon's theorem, we have

$-900 \times 2 = F_1 \times 1 + F_2 \times 0$

$F_1 = -1800$ N (–ve sign indicates wrong assumed direction)

$\therefore F_1 = 1800$ N (↑)

(iv) Position of F_1 and F_2 is as shown in Fig. 2.19(c).

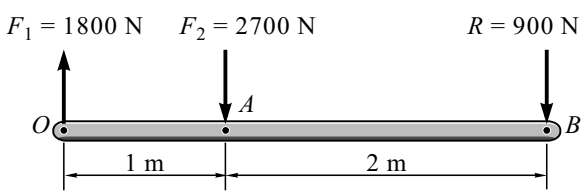

Fig. 2.19(c)

Problem 20

Find the resultant of active forces only shown in Fig. 2.20(a) and show its position w.r.t. point A.

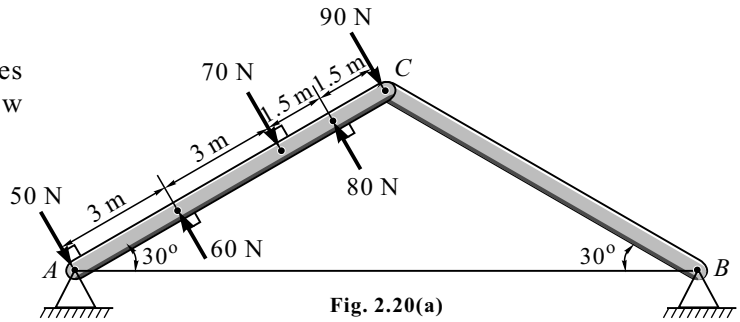

Fig. 2.20(a)

Solution

(i) $R = -50 + 60 - 70 + 80 - 90$

$R = -70$

$\therefore R = 70 \text{ N } (\searrow 60^\circ)$

(ii) $\Sigma M_A = 60 \times 3 - 70 \times 6 + 80 \times 7.5 - 90 \times 9$

$\Sigma M_A = -450 \text{ N-m}$

$\Sigma M_A = 450 \text{ N-m}(\circlearrowright)$

(iii) By Varignon's theorem, we have

$\Sigma M_A = R \times d$

$d = \dfrac{\Sigma M_A}{d} = \dfrac{450}{70}$

$\therefore d = 6.429 \text{ m}$

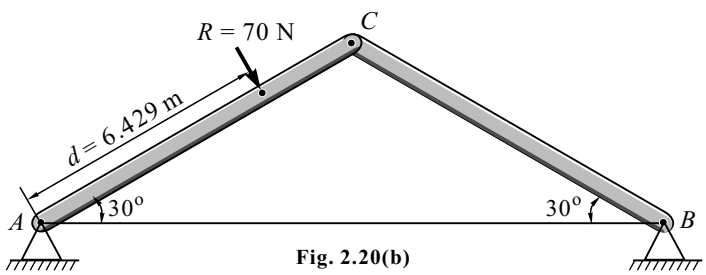

Fig. 2.20(b)

(iv) Position of resultant w.r.t. point A is as shown in Fig. 2.20(b).

Problem 21

A part roof truss is acted by wind and other forces as shown in Fig. 2.21(a). All the forces form a parallel force system and are perpendicular to portion AB of the truss. Find the resultant of the force and its location w.r.t. hinge A.

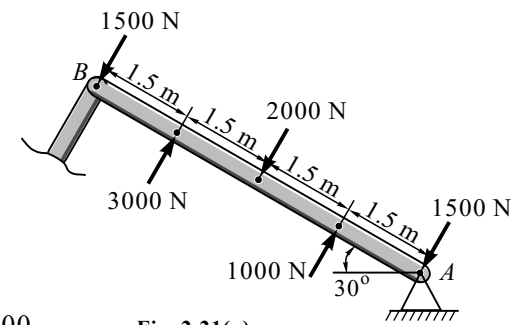

Fig. 2.21(a)

Solution

(i) $R = \Sigma F = -1500 + 1000 - 2000 + 3000 - 1500$

$R = -1000$

$\therefore R = 1000 \text{ N } (\swarrow 60^\circ)$

(ii) $\Sigma M_A = 1500 \times 6 - 3000 \times 4.5 + 2000 \times 3 - 1000 \times 1.5$

$\therefore \Sigma M_A = 0$

(iii) By Varignon's theorem, we have

$$\Sigma M_A = R \times d$$

$$\therefore d = 0$$

(iv) Position of resultant R = 1000 N, acting at hinge A is as shown in Fig. 2.21(b).

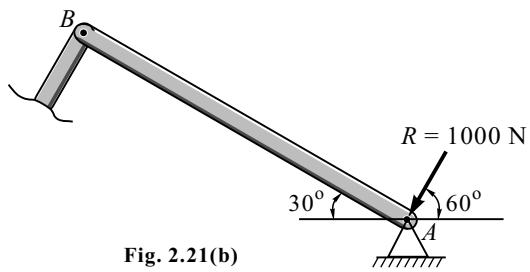

Fig. 2.21(b)

Problem 22

Determine the resultant of the parallel force shown in Fig. 2.22(a) and locate it w.r.t. O, if its radius is 1 m.

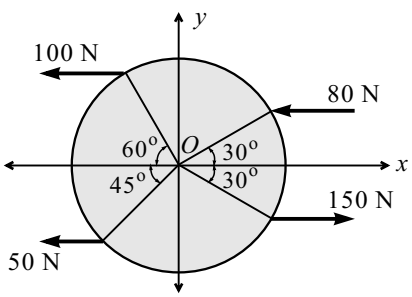

Fig. 2.22(a)

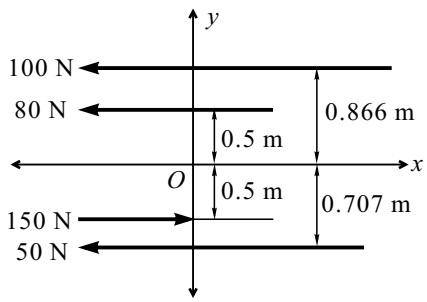

Fig. 2.22(b)

Solution

(i) Magnitude of the resultant R

$$R = -100 - 80 + 150 - 50$$

$$\therefore R = -80 \text{ N} = 80 \text{ N } (\leftarrow)$$

(ii) $\Sigma M_O = 100 \times 0.866 + 80 \times 0.5 + 150 \times 0.5 - 50 \times 0.707$

$$\therefore \Sigma M_O = 166.25 \text{ N-m } (\circlearrowleft)$$

(iii) Applying Varignon's theorem,

$$d = \frac{\Sigma M_O}{R} = \frac{166.25}{80}$$

$$\therefore d = 2.078 \text{ m}$$

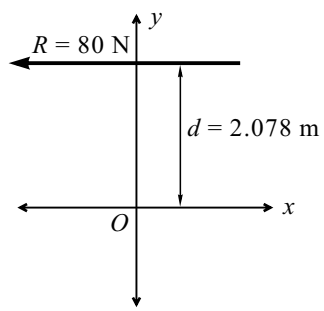

Fig. 2.22(c)

(iv) Position of resultant w.r.t origin O is as shown in Fig. 2.22(c).

2.5 RESULTANT OF NON-CONCURRENT NON-PARALLEL GENERAL FORCE SYSTEM

Procedure

Step 1 : Find ΣF_x

Resolve all the forces along the horizontal x-axis and take the algebraic sum of force components considering proper sign convention (+ve →).

Step 2 : Find ΣF_y

Resolve all the forces along the vertical y-axis and take the algebraic sum of force components considering proper sign convention (+ve ↑).

Step 3 : Find R

Magnitude of resultant is given by

$$R = \sqrt{(\Sigma F_x)^2 + (\Sigma F_y)^2}$$

Step 4 : Find θ

Inclination of the line of action of resultant force with horizontal x-axis is given by

$$\tan\theta = \left|\frac{\Sigma F_y}{\Sigma F_x}\right| \quad \therefore \quad \theta = \tan^{-1}\left(\frac{\Sigma F_y}{\Sigma F_x}\right)$$

Note : Use only positive value of ΣF_x and ΣF_y to find θ with horizontal x-axis so θ will be always an acute angle.

Step 5 : ΣM_O

Take the algebraic sum of moment of force about a point (say O) considering proper sign conventions (+ve ↺ / –ve ↻)

Step 6 : Applying Varignon's theorem

$\Sigma M_O = R \times d$ (where d is the perpendicular distance between the line of action of R and reference point O)

or

$\Sigma M_O = \Sigma F_y \times x$ (where x is the distance between point O and the intersection of line of action of resultant R with x-axis)

or

$\Sigma M_O = \Sigma F_x \times y$ (where y is the distance between point O and the intersection of line of action of resultant R with y-axis)

Step 7 : Position of resultant w.r.t. point O

Depending on the sign of ΣF_x and ΣF_y and ΣM_O, any one possible position of R among the eight may arise.

(i) ΣF_x $(\rightarrow)$

ΣF_y $(\uparrow)$

ΣM_O $(\circlearrowleft)$

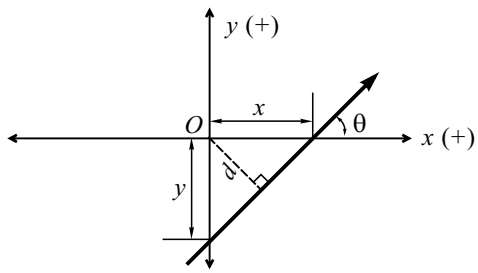

(ii) ΣF_x $(\rightarrow)$

ΣF_y $(\uparrow)$

ΣM_O $(\circlearrowright)$

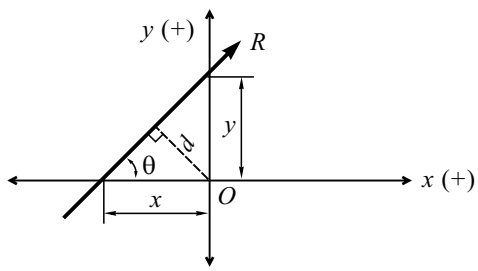

(iii) ΣF_x $(\leftarrow)$

ΣF_y $(\uparrow)$

ΣM_O $(\circlearrowleft)$

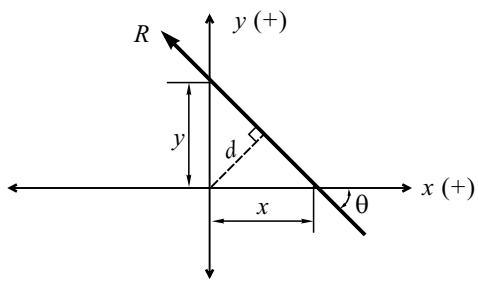

(iv) ΣF_x $(\leftarrow)$

ΣF_y $(\uparrow)$

ΣM_O $(\circlearrowright)$

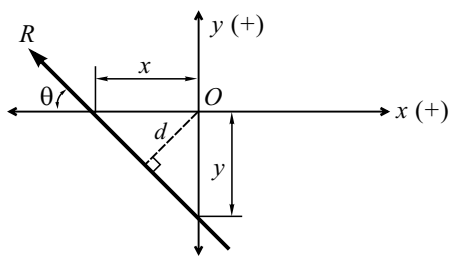

(v) ΣF_x $(\leftarrow)$

ΣF_y $(\downarrow)$

ΣM_O $(\circlearrowleft)$

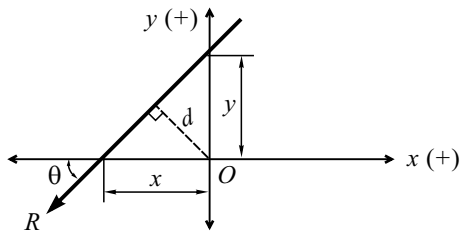

(vi) ΣF_x $(\leftarrow)$

ΣF_y $(\downarrow)$

ΣM_O $(\circlearrowright)$

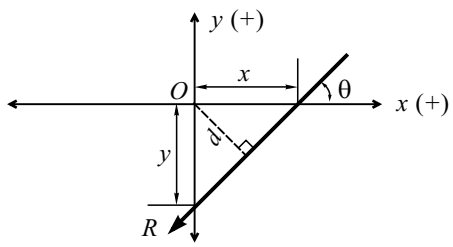

(vii) ΣF_x $(\rightarrow)$

ΣF_y $(\downarrow)$

ΣM_O $(\circlearrowleft)$

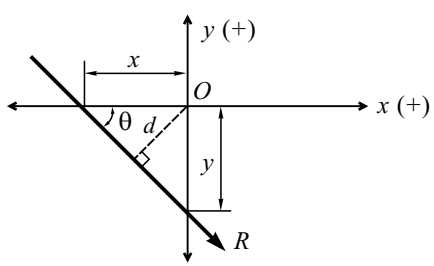

(viii) ΣF_x $(\rightarrow)$

ΣF_y $(\downarrow)$

ΣM_O $(\circlearrowright)$

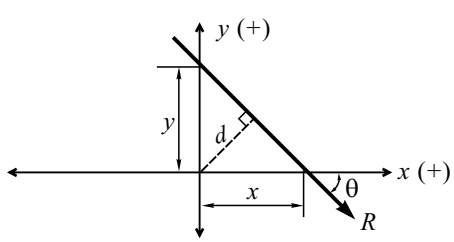

Note : It is very easy to select the correct position of R among the eight by following the guidelines:

- First observe the direction of ΣF_x and ΣF_y which gives the reference position of R in any of the quadrant passing through origin.
- Since ΣM_O is not zero, it means resultant R should not pass through O. So R is suppose to be at some distance d from O.
- Observe the direction of ΣM_O and shift R on the required side to satisfy the direction of rotation of ΣM_O.

Solved Problems

Problem 23

Replace the system of forces and couple shown in Fig. 2.23(a) by a single force couple system at A.

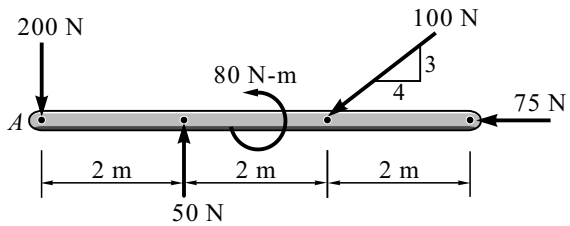

Fig. 2.23(a)

Solution

(i) $\Sigma F_x = -100 \cos 36.87^o - 75$

$\Sigma F_x = -155$ N

$\therefore \Sigma F_x = 155$ N $(\leftarrow)$

(ii) $\Sigma F_y = -200 + 50 - 100 \sin 36.87^o$

$\Sigma F_y = -210$ N

$\therefore \Sigma F_y = 210$ N $(\downarrow)$

(iii) Magnitude of the resultant R

$$R = \sqrt{(155)^2 + (210)^2}$$

$R = 261$ N

(iv) Inclination of the resultant θ

$$\theta = \tan^{-1}\left(\frac{210}{155}\right)$$

$\therefore \theta = 53.57^o$

(v) $\Sigma M_A = 50 \times 2 + 80 - 100 \sin 36.87^o \times 4$

$\Sigma M_A = -60$ N-m

$\therefore \Sigma M_A = 60$ N-m $(\circlearrowleft)$

(vi) The resultant of the force system is in the form of a single force and couple as shown in Fig. 2.23(b) at A.

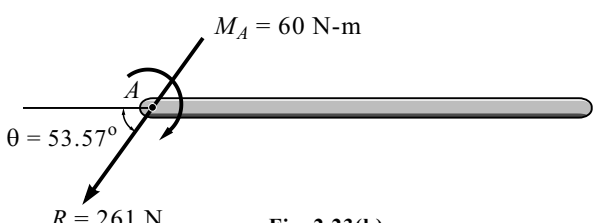

Fig. 2.23(b)

Problem 24

Replace the force system shown in Fig. 2.24(a) by a single force.

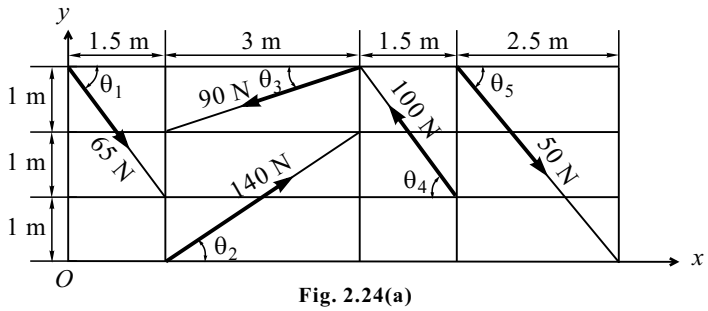

Fig. 2.24(a)

Solution

(i) $\tan\theta_1 = \dfrac{2}{1.5} \quad \therefore\ \theta_1 = 53.13^\circ$ $\qquad \tan\theta_4 = \dfrac{2}{1.5} \quad \therefore\ \theta_1 = 53.13^\circ$

$\tan\theta_2 = \dfrac{2}{3} \quad \therefore\ \theta_2 = 33.69^\circ$ $\qquad \tan\theta_5 = \dfrac{3}{2.5} \quad \therefore\ \theta_5 = 50.19^\circ$

$\tan\theta_3 = \dfrac{1}{3} \quad \therefore\ \theta_3 = 18.44^\circ$

(ii) $\Sigma F_x = 65\cos 53.13^\circ + 140\cos 33.69^\circ - 90\cos 18.44^\circ - 100\cos 53.13^\circ + 50\cos 50.19^\circ$

$\therefore\ \Sigma F_x = 42.12\ \text{N}\ (\rightarrow)$

(iii) $\Sigma F_y = -65\sin 53.13^\circ + 140\sin 33.69^\circ - 90\sin 18.44^\circ + 100\sin 53.13^\circ - 50\sin 50.19^\circ$

$\therefore\ \Sigma F_y = 38.78\ \text{N}\ (\uparrow)$

(iv) $R = \sqrt{(42.12)^2 + (38.78)^2}$

$\therefore\ R = 57.25\ \text{N}$

(v) $\theta = \tan^{-1}\left(\dfrac{38.78}{42.12}\right)$

$\therefore\ \theta = 42.64^\circ$

(vi) $\Sigma M_O = -65\cos 53.13^\circ \times 3 + 140\sin 33.69^\circ \times 1.5 + 90\cos 18.44^\circ \times 3 - 90\sin 18.44^\circ \times 4.5$
$+ 100\cos 53.13^\circ \times 1 + 100\sin 53.13^\circ \times 6 - 50\cos 50.19^\circ \times 3 - 50\sin 50.19^\circ \times 6$

$\therefore\ \Sigma M_O = 341.03\ \text{N-m}\ (\circlearrowleft)$

(vii) By Varignon's theorem,

$$x = \frac{\Sigma M_O}{\Sigma F_y} = \frac{341.03}{38.78}$$

$\therefore\ x = 8.79\ \text{m}$

(viii) Position of resultant w.r.t. O is as shown in Fig. 2.24(b).

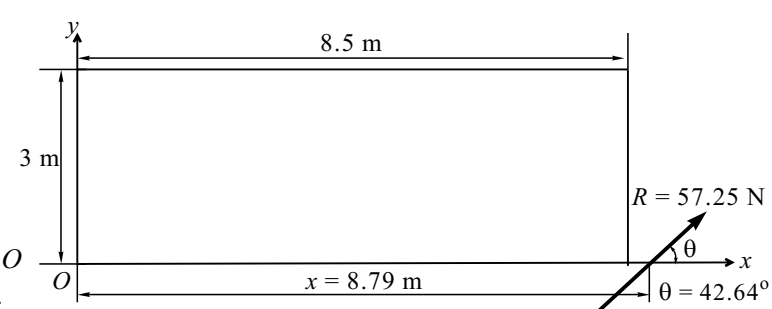

Fig. 2.24(b)

Problem 25

(i) Find the resultant of the force system shown in Fig. 2.25(a).

(ii) Replace the given force and couple by a single force and couple system at A.

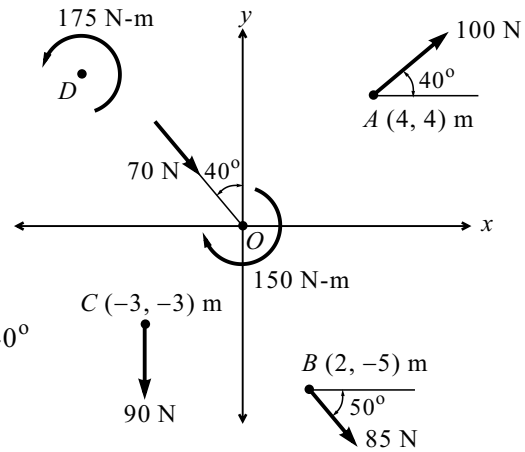

Fig. 2.25(a)

Solution

(i)

(a) $\Sigma F_x = 100 \cos 40^o + 85 \cos 50^o + 70 \sin 40^o$

$\therefore \Sigma F_x = 176.24 \text{ N } (\rightarrow)$

(b) $\Sigma F_y = 100 \sin 40^o - 85 \sin 50^o - 90 - 70 \cos 40^o$

$\Sigma F_y = -144.46 \text{ N}$

$\therefore \Sigma F_y = 144.46 \text{ N } (\downarrow)$

(c) Magnitude of the resultant R

$$R = \sqrt{(176.24)^2 + (144.46)^2}$$

$\therefore R = 227.88 \text{ N}$

(d) Inclination of the resultant θ

$$\theta = \tan^{-1}\left(\frac{144.46}{176.24}\right)$$

$\therefore \theta = 39.34^o$

(e) $\Sigma M_O = -100 \cos 40^o \times 40 + 100 \sin 40^o \times 4 + 85 \cos 50^o \times 5$
$- 85 \sin 50^o \times 2 + 90 \times 3 + 175 - 150$

$\Sigma M_O = 2369.10 \text{ N-m } (\circlearrowright)$

(f) Applying Varignon's theorem, we have

$\Sigma M_O = R \times d$

$$d = \frac{2369.10}{227.88}$$

$\therefore d = 10.4 \text{ m}$

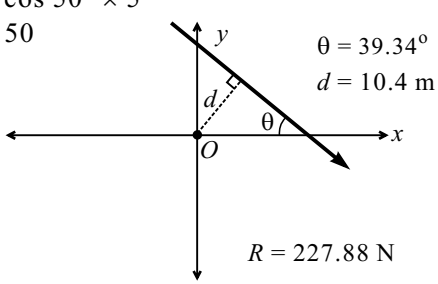

Fig. 2.25(b)

(g) Position of resultant R w.r.t. O is as shown in Fig. 2.25(b).

(ii)

Results **(a)** to **(d)** as above in **(i)**

(h) $\Sigma M_A = 85 \cos 50^o \times 9 + 85 \sin 50^o \times 2 + 90 \times 7$
$+ 70 \sin 40^o \times 4 + 70 \cos 40^o \times 4 + 175 - 150$

$\therefore \Sigma M_A = 1671.43 \text{ N-m } (\circlearrowleft)$

(i) Resultant of given force system of point A is a force and couple as shown in Fig. 2.25(c).

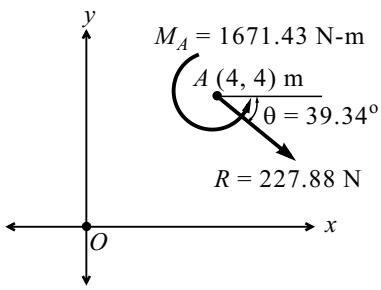

Fig. 2.25(c)

Problem 26

Find the resultant of the force system shown in Fig. 2.26(a).

Given : Radius = 2.5 m

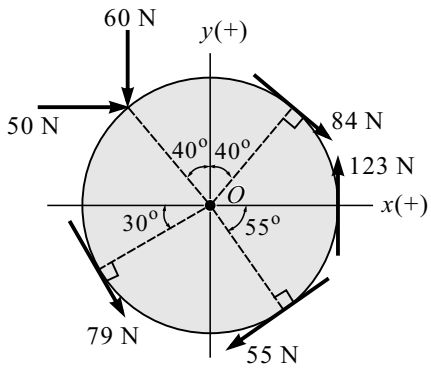

Fig. 2.26(a)

Solution

Refer to Fig. 2.26(b).

(i) $\Sigma F_x = 84 \cos 40^\circ - 55 \cos 35^\circ + 79 \cos 60^\circ + 50$

$\therefore \Sigma F_x = 108.79 \text{ N } (\rightarrow)$

(ii) $\Sigma F_y = -84 \sin 40^\circ - 55 \sin 35^\circ - 79 \sin 60^\circ + 123 - 60$

$\Sigma F_y = -90.96 \text{ N}$

$\therefore \Sigma F_y = 90.96 \text{ N } (\downarrow)$

(iii) $R = \sqrt{(108.79)^2 + (90.96)^2}$

$\therefore R = 141.80 \text{ N}$

(iv) $\theta = \tan^{-1}\left(\dfrac{90.96}{108.79}\right)$

$\therefore \theta = 39.89^\circ$

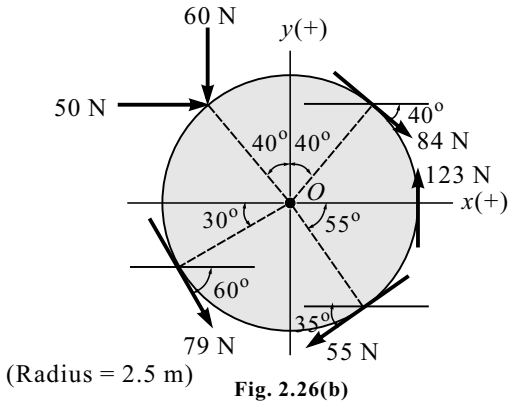

Fig. 2.26(b)

(v) $\Sigma M_O = -84 \times 2.5 + 123 \times 2.5 - 55 \times 2.5 + 79 \times 2.5$
$- 50 \times 2.5 \cos 40^\circ + 60 \times 2.5 \sin 40^\circ$

$\therefore \Sigma M_O = 158.16 \text{ N-m } (\circlearrowleft)$

(vi) By Varignon's theorem,

$\Sigma M_O = R \times d$

$d = \dfrac{158.16}{141.80}$

$\therefore d = 1.12 \text{ m}$

(vii) Position of resultant R is as shown in Fig. 2.26(c).

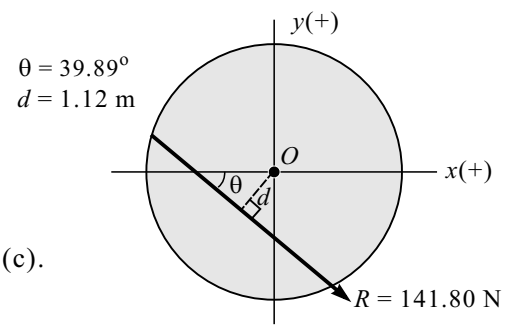

Fig. 2.26(c)

Problem 27

A triangular plate ABC is subjected to four coplanar forces as shown in Fig. 2.27(a). Find the resultant completely and locate its position with respect to point A.

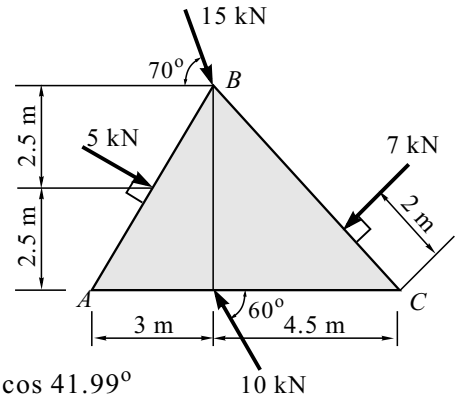

Fig. 2.27(a)

Solution

Refer to Fig. 2.27(b) for geometrical angles.

(i) $\Sigma F_x = 5 \cos 30.96^\circ + 15 \cos 70^\circ - 10 \cos 60^\circ - 7 \cos 41.99^\circ$

$\therefore \Sigma F_x = -0.78 \text{ kN} = 0.78 \text{ kN } (\leftarrow)$

(ii) $\Sigma F_y = -5 \sin 30.96^\circ - 15 \sin 70^\circ + 10 \sin 60^\circ - 7 \sin 41.99^\circ$

$\therefore \Sigma F_y = -12.69 \text{ kN} = 12.69 \text{ kN } (\downarrow)$

(iii) Resultant R

$$R = \sqrt{(\Sigma F_x)^2 + (\Sigma F_y)^2}$$

$$R = \sqrt{(0.78)^2 + (12.69)^2}$$

$\therefore R = 12.71 \text{ kN}$

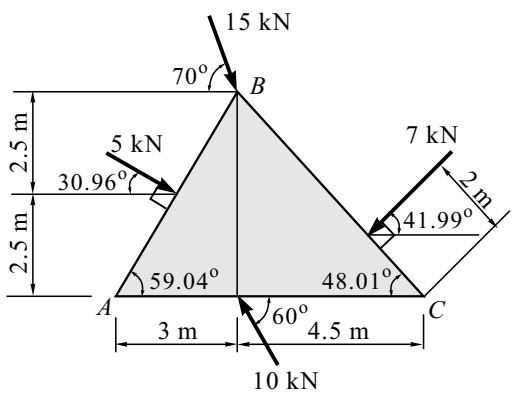

Fig. 2.27(b)

(iv) Direction of the resultant

$$\theta = \tan^{-1}\left(\frac{\Sigma F_y}{\Sigma F_x}\right)$$

$$\theta = \tan^{-1}\left(\frac{12.69}{0.78}\right)$$

$\therefore \theta = 86.48^\circ$

(v) $\Sigma M_A = -5 \cos 30.96^\circ \times 2.5 - 5 \sin 30.96^\circ \times 1.5 - 15 \cos 70^\circ \times 5 - 15 \sin 70^\circ \times 3$
$+ 10 \sin 60^\circ \times 3 + 7 \cos 41.99^\circ \times 2 \sin 48.01^\circ - 7 \sin 41.99^\circ \times (7.5 - 2 \cos 48.01^\circ)$

$\Sigma M_A = -77.66 \text{ kN-m}$

$\therefore \Sigma M_A = 77.66 \text{ kN-m } (\circlearrowright)$

(vi) By Varignon's theorem, we have

$$x = \frac{\Sigma M_A}{\Sigma F_y} = \frac{77.66}{12.69}$$

$\therefore x = 6.12 \text{ m}$

(vii) Position of resultant w.r.t. A is as shown in Fig. 2.27(c).

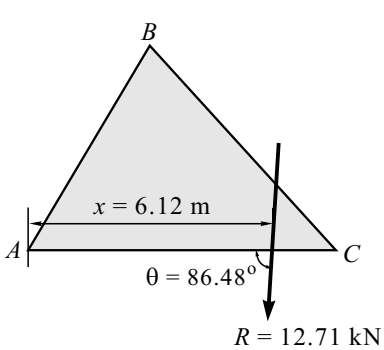

Fig. 2.27(c)

Problem 28

Find the resultant of a coplanar forces system given in Fig. 2.28(a) and the same on AB with due consideration to the applied moment.

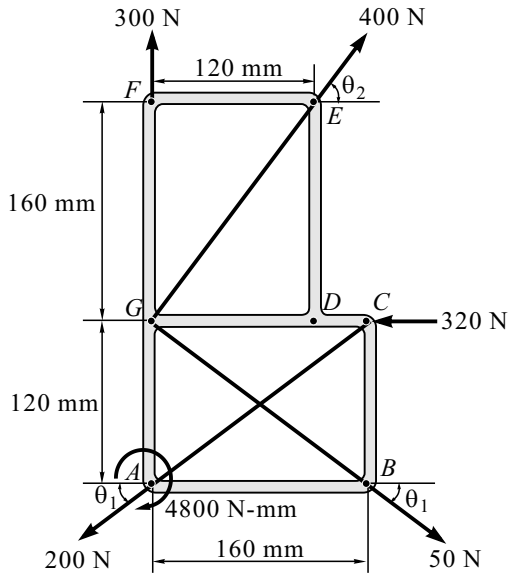

Fig. 2.28(a)

Solution

(i) $\tan\theta_1 = \dfrac{1200}{1600} \quad \therefore \theta_1 = 36.87^\circ$

$\tan\theta_2 = \dfrac{1600}{1200} \quad \therefore \theta_2 = 53.13^\circ$

$\sin\theta_1 = 0.6 \;;\; \sin\theta_2 = 0.8$

$\cos\theta_1 = 0.8 \;;\; \cos\theta_2 = 0.6$

(ii) $\Sigma F_x = -200 \times 0.8 + 50 \times 0.8 - 320 + 400 \times 0.6$

$\Sigma F_x = -200$ N

$\therefore \Sigma F_x = 200$ N $(\leftarrow)$

(iii) $\Sigma F_y = -200 \times 0.6 - 50 \times 0.6 + 400 \times 0.8 + 300$

$\therefore \Sigma F_y = 470$ N $(\uparrow)$

(iv) $R = \sqrt{(200)^2 + (470)^2}$

$\therefore R = 510.78$ N

(v) $\theta = \tan^{-1}\left(\dfrac{470}{200}\right)$

$\therefore \theta = 66.95^\circ$

(vi) $\Sigma M_A = -4800 - 50 \times 0.6 \times 160 + 320 \times 120 - 400 \times 0.6 \times 280 + 400 \times 0.8 \times 120$

$\therefore \Sigma M_A = 0$

(vii) Applying Varignon's theorem,

$\Sigma M_A = R \times d$

$d = \dfrac{\Sigma M_A}{R} = \dfrac{0}{510.78}$

$\therefore d = 0$

(viii) Position of resultant is as shown in Fig. 2.28(b).

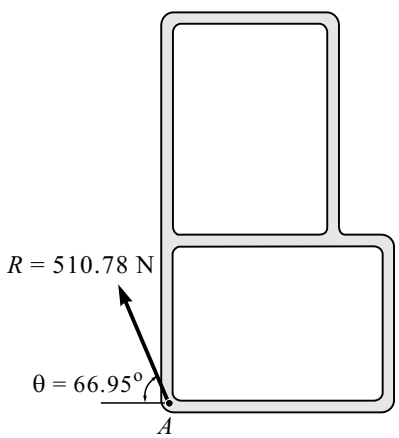

Fig. 2.28(b)

Problem 29

A fixed square board *EFGH* carries two pulleys *A* and *B* which carry loads of 20 N and 40 N respectively with the help of cables fixed at point *K* and *J* as shown in Fig. 2.29(a). The diameter of each pulley is 400 mm. With reference to *xy*-axis, the coordinates of centre of pulleys are *A*(1, 4) m and *B*(4, 1) m. Find **(i)** magnitude of resultant force on the board, and **(ii)** position *x*-axis intercept, *y*-axis intercept of the resultant force.

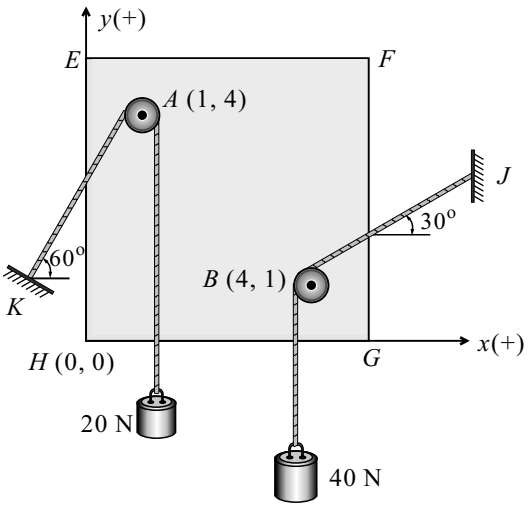

Fig. 2.29(a)

Solution

(i) $\Sigma F_x = -20 \cos 60^\circ + 40 \cos 30^\circ$

$\therefore \Sigma F_x = 24.64 \text{ N } (\rightarrow)$

(ii) $\Sigma F_y = -20 - 20 \sin 60^\circ - 40 + 40 \sin 30^\circ$

$\therefore \Sigma F_y = -57.32 \text{ N} = 57.32 \text{ N } (\downarrow)$

(iii) Magnitude of the resultant *R*

$$R = \sqrt{(24.64)^2 + (57.32)^2}$$

$\therefore R = 62.39 \text{ N}$

(iv) Inclination of the resultant θ

$$\theta = \tan^{-1}\left(\frac{57.32}{24.64}\right)$$

$\therefore \theta = 66.74^\circ$

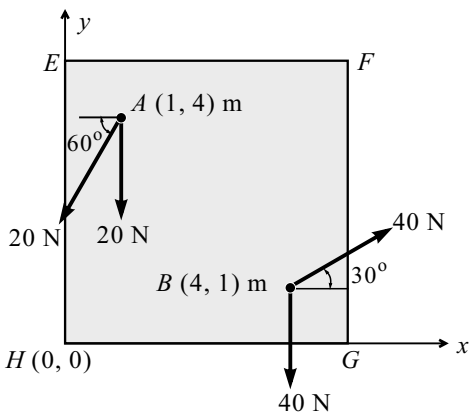

Fig. 2.29(b)

(v) $\Sigma M_H = -20 \times 1 + 20 \cos 60^\circ \times 4 - 20 \sin 60^\circ \times 1 - 40 \times 4 - 40 \cos 30^\circ \times 1 + 40 \sin 30^\circ \times 4$

$\Sigma M_H = -111.96 \text{ N-m}$

$\therefore \Sigma M_H = 111.96 \text{ N-m } (\circlearrowleft)$

(vi) By Varignon's theorem, we have

$$x = \frac{\Sigma M_H}{\Sigma F_y} = \frac{111.96}{57.32}$$

$\therefore x = 1.95 \text{ m}$

$$y = \frac{\Sigma M_H}{\Sigma F_x} = \frac{111.96}{24.64}$$

$\therefore y = 4.54 \text{ m}$

(vii) Position of resultant w.r.t. point *H* (0, 0) is as shown in Fig. 2.29(c).

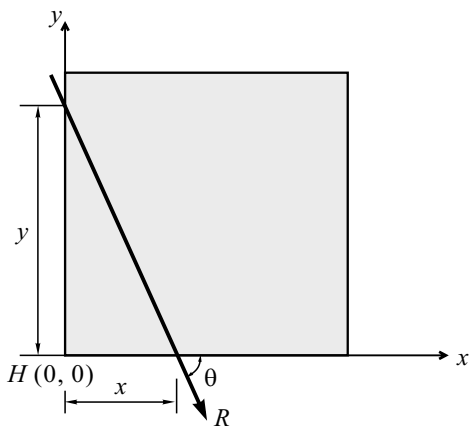

Fig. 2.29(c)

Problem 30

Three forces P, Q, and L are acting on an equilateral triangular plate ABC as shown in Fig. 2.30(a). The resultant of 100 N is known to pass vertically up from point B. Find the magnitudes of the three forces such that the moment of the three forces about B is zero. Points E, F, G are the centres of the sides of the triangular plate.

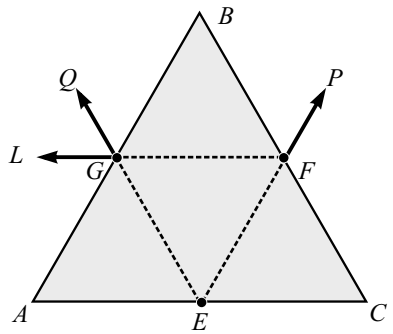

Fig. 2.30(a)

Solution

(i) Refer to Fig. 2.30(b), we have

$\cos 30 = \frac{x}{a} \quad \therefore x = a \cos 30^o$

$\cos 30 = \frac{y}{a} \quad \therefore y = a \cos 30^o$

If $R = 100$ N $(\uparrow)$ then $\Sigma F_x = 0$, $\Sigma F_y = 100$ N $(\uparrow)$

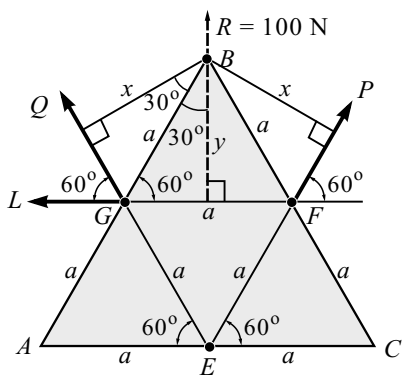

Fig. 2.30(b)

(ii) Applying resolution and composition, we get

$\Sigma F_x = P \cos 60^o - Q \cos 60^o - L$

$0 = P \cos 60^o - Q \cos 60^o - L$

$P \cos 60^o - Q \cos 60^o = L$ ...(I)

$\Sigma F_y = P \sin 60^o + Q \sin 60^o$

$100 = P \sin 60^o + Q \sin 60^o$ ...(II)

Given data $\Sigma M_B = 0$

$\Sigma M_B = P\,(a \cos 30^o) - Q\,(a \cos 30^o) - L\,(a \cos 30^o)$

$0 = (P - Q - L)(a \cos 30^o)$

$(P - Q - R) = 0$

$\therefore P - Q = L$ ...(III)

(iii) Substitute L in Eq. (I), we get

$P \cos 60^o - Q \cos 60^o = P - Q$

$0.5\,P - 0.5\,Q = P - Q$

$\therefore P = Q$

When $P = Q$, then $L = 0$. From Eq. (II), we get

$100 = P \sin 60^o + P \sin 60^o$

$P = 57.74$ N $\Rightarrow Q = 57.74$ N

$\therefore P = Q = 57.74$ N , $L = 0$

SUMMARY

- **Resultant :** A single force which replaces the given force system having the same effect.
- **Equilibrant :** It is a single force which brings the system to equilibrium. Thus, equilibrant is equal in magnitude, opposite in direction and collinear to resultant force.
- **Resultant of Concurrent Force System Using Law of Parallelograms :** If two forces acting simultaneously on a body at a point are represented in magnitude and direction by the two adjacent sides of a parallelogram, then their resultant is represented in magnitude and direction by the diagonal of parallelogram which passes through the point of intersection of the two sides representing the forces.

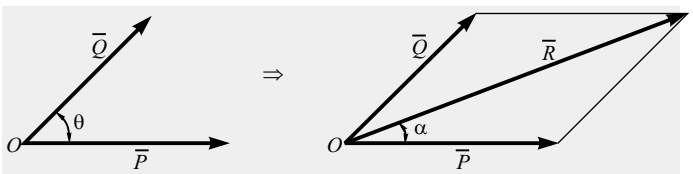

$$R = \sqrt{P^2 + Q^2 + 2\,PQ\cos\theta} \quad \text{and} \quad \tan\alpha = \frac{Q\sin\theta}{P + Q\cos\theta}$$

- **Resultant of Concurrent Force System Using Triangle Law :** If two forces are represented by their force vector placed tip to tail; their resultant is the vector directed form the tail of first vector to the tip of the second vector.

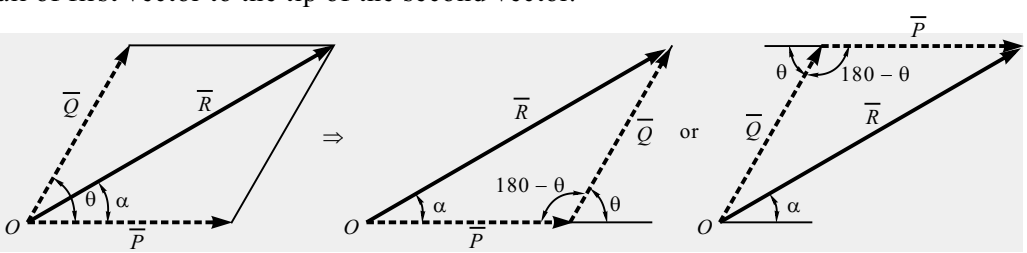

By cosine rule, we have

$$R^2 = P^2 + Q^2 - 2\,PQ\cos(180 - \theta) = P^2 + Q^2 + 2\,PQ\cos\theta$$

$$\therefore\ R = \sqrt{P^2 + Q^2 + 2\,PQ\cos\theta}$$

- **Resultant of Concurrent Force System Using Method of Resolution**

(i) $R_x = \Sigma F_x$ (+ve → / -ve ←) **(ii)** $R_y = \Sigma F_y$ (+ve ↑ / –ve ↓).

(iii) $R = \sqrt{(\Sigma F_x)^2 + (\Sigma F_y)^2}$ **(iv)** $\tan\theta = \left|\dfrac{\Sigma F_y}{\Sigma F_x}\right|$

(v) Position of R

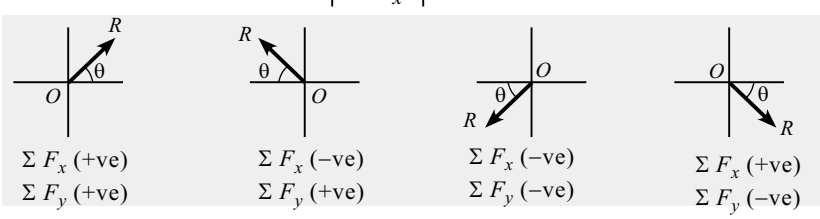

- **Resultant of Parallel Force System**

(i) $R = \Sigma F$ (+ve↑ / –ve ↓)

(ii) ΣM_O (+ve ↺ / –ve ↻)

(iii) Apply Varignon's theorem

$\Sigma M_O = R \times d$

(iv) Position of R

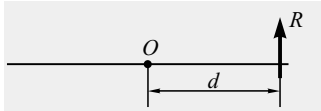

ΣF ↑ and ΣM_O (+ve ↺)

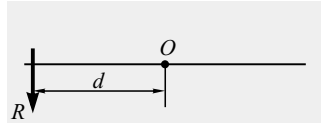

ΣF ↓ and ΣM_O (+ve ↺)

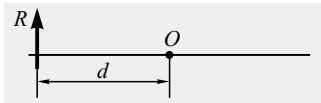

ΣF ↑ and ΣM_O (–ve ↻)

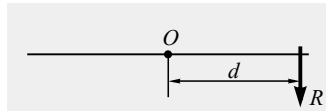

ΣF ↓ and ΣM_O (–ve ↻)

- **Resultant of General Force System**

(i) ΣF_x (+ve → / –ve ←) **(ii)** ΣF_y (+ve ↑ / –ve ↓)

(iii) $R = \sqrt{(\Sigma F_x)^2 + (\Sigma F_y)^2}$ **(iv)** $\tan\theta = \left|\dfrac{\Sigma F_y}{\Sigma F_x}\right|$

(v) Find ΣM_O (+ve ↺ / –ve ↻)

(vi) Applying Varignon's theorem

$\Sigma M_O = R \times d$ OR $\Sigma M_O = \Sigma F_y \times x$ OR $\Sigma M_O = \Sigma F_x \times y$

(vii) Position of R

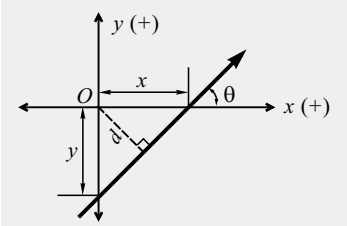

ΣF_x (→); ΣF_y (↑); ΣM_O (↺)

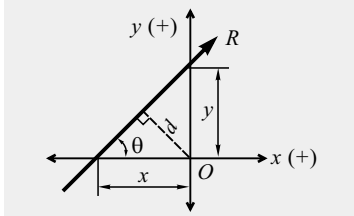

ΣF_x (→); ΣF_y (↑); ΣM_O (↻)

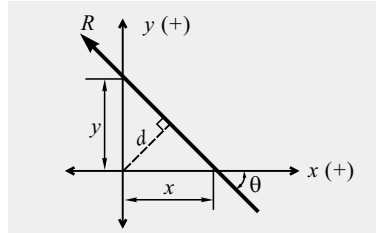

ΣF_x (←); ΣF_y (↑); ΣM_O (↺)

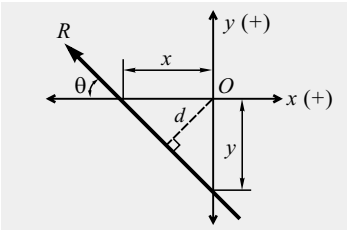

ΣF_x (←); ΣF_y (↑); ΣM_O (↻)

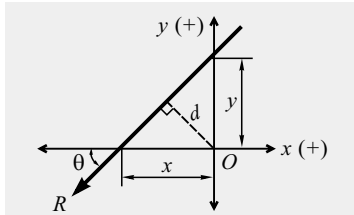

ΣF_x (←); ΣF_y (↓); ΣM_O (↺)

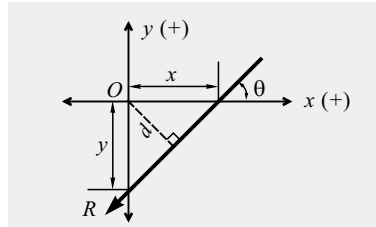

ΣF_x (←); ΣF_y (↓); ΣM_O (↻)

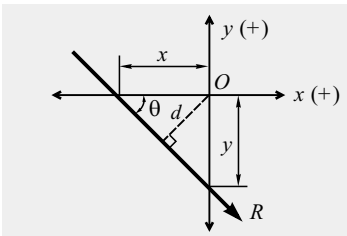

ΣF_x (→); ΣF_y (↓); ΣM_O (↺)

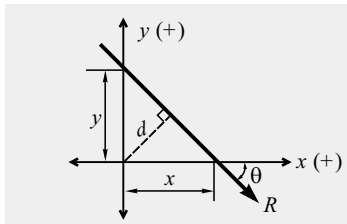

ΣF_x (→); ΣF_y (↓); ΣM_O (↻)

EXERCISES

[I] Problems

1. Find the resultant of the given force system as shown in Fig. 2.E1.

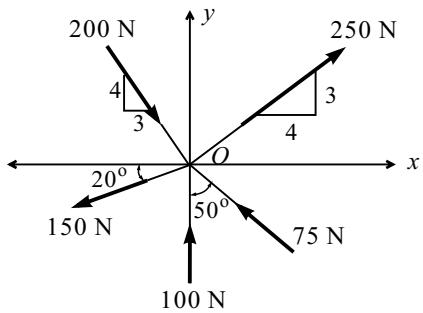

Fig. 2.E1

2. Find the fourth force (F_4) completely so as to give the resultant of the system of force as shown in Fig. 2.E2.

[***Ans.*** 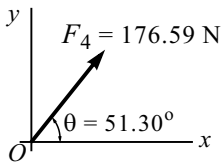

]

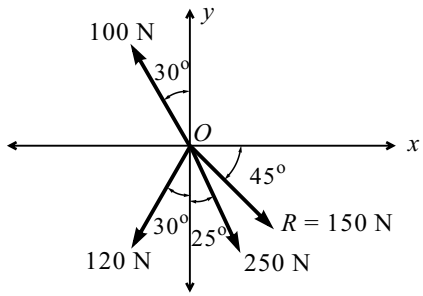

Fig. 2.E2

3. Find the resultant of the force acting on a particle P shown in Fig. 2.E3.

[***Ans.*** $R = 500.09$ N (θ) and $\theta = 88.8^\circ$]

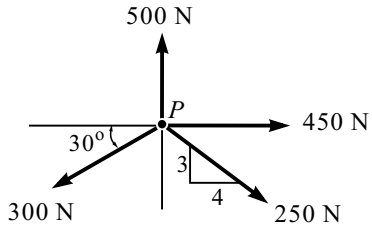

Fig. 2.E3

4. The resultant of the three pulls applied through the three chains attached to the bracket is θ as shown in Fig. 2.E4. Determine the magnitude and angle of the resultant.

[***Ans.*** $R = 623.24$ N and $\theta = 75.4^\circ$]

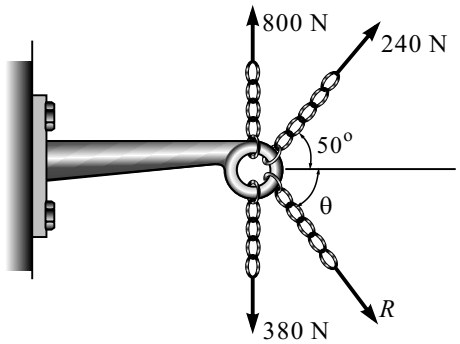

Fig. 2.E4

5. Four forces act on an eye bolt as shown in Fig. 2.E5.
Find the magnitude and angle of the resultant.

[***Ans.*** $R = 286$ N and $\theta = 88.81^{\circ}$]

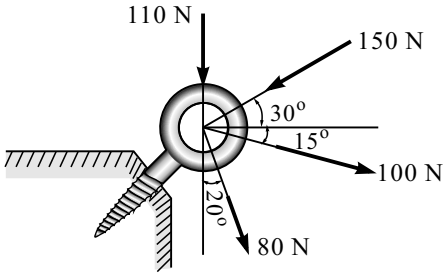

Fig. 2.E5

6. A gusset plate of roof truss is subjected to forces as shown in Fig. 2.E6.
Determine the magnitude of the resultant force and its orientation measured counter clockwise from the positive x-axis.

[***Ans.*** $R = 34.14$ N and $\theta = 180^{\circ}\,42'$]

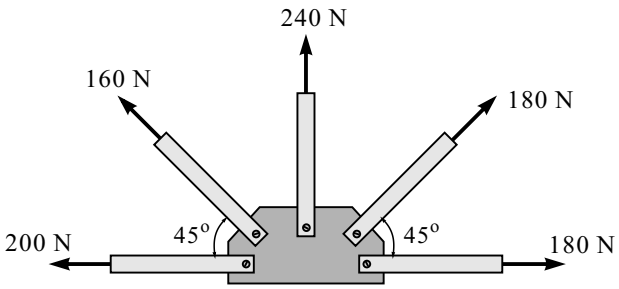

Fig. 2.E6

7. A force R = 25 kN acting at O has three components F_A, F_B and F_C as shown in Fig. 2.E7 if F_C = 20 kN, find F_A and F_B.

[***Ans.*** F_A = 33.91 kN and
F_B = 35.04 kN]

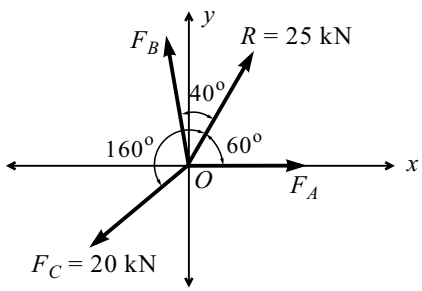

Fig. 2.E7

8. Three forces acting at a point are shown in Fig. 2.E8. The direction of the 300 N forces my vary but the angle between them is always 40°. Determine the value of θ for which the resultant of the three forces is directed parallel to x-x along the inclined. Find the result.

[***Ans.*** θ = 6.35° and R = 938.25 N $(\measuredangle 30^{\circ})$]

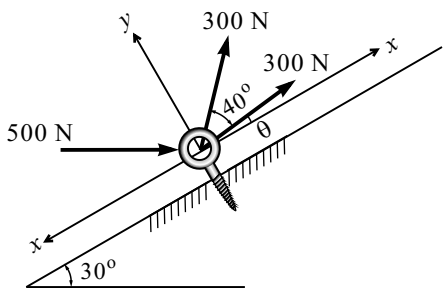

Fig. 2.E8

9. A car is made to move by applying resultant force R = 2000 N along the x-axis. This resultant is developed due to two pulling forces F_1 and F_2 on two ropes as shown in Fig. 2.E9. Determine the tension in individual ropes.

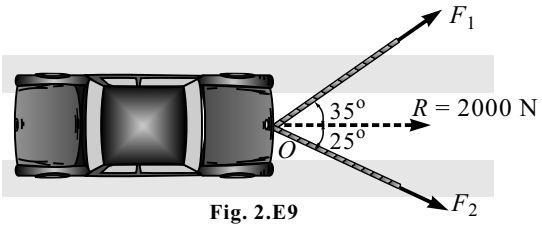

Fig. 2.E9

10. Two locomotives on opposite banks of a canal pull a vessel moving parallel to the banks by means of two horizontal ropes. The tension in these ropes are 2000 N and 2400 N while the angle between them is 60°. Find the resultant pull on the vessel and the angle between each of the ropes and the sides of the canal.

[***Ans.*** $\theta = 33^\circ$, $\alpha = 27^\circ$ and R = 3815.75 N (→)]

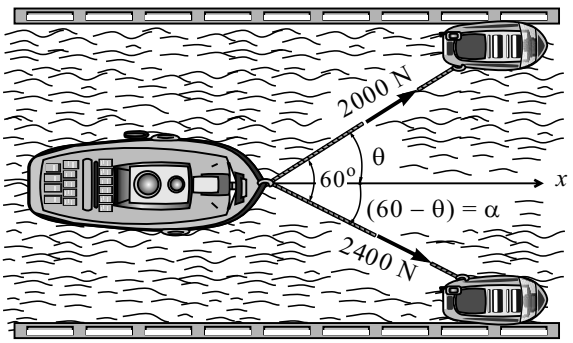

Fig. 2.E10

11. The resultant of four vertical forces is a couple of 300 N-m counterclockwise. Three of the forces are shown in Fig. 2.E11. Determine the fourth.

[***Ans.*** 33 N at 4.47 m to the right of O]

Fig. 2.E11

12. Find the resultant of the system of parallel forces shown in Fig. 2.E12 at point A.

[***Ans.***

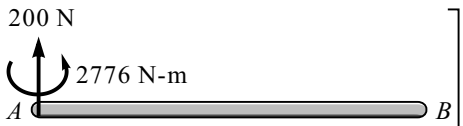

]

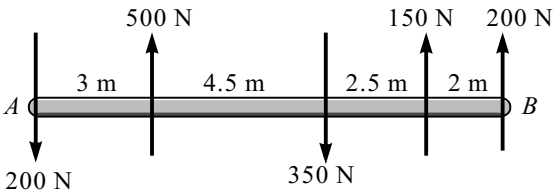

Fig. 2.E12

13. The resultant of the three forces shown in Fig. 2.E13 and other two forces P and Q acting at A and B is a couple of magnitude 120 kN-m clockwise. Determine the forces P and Q.

[***Ans.*** At A force P = 29 kN (↑) and at B force Q = 16 kN (↓)]

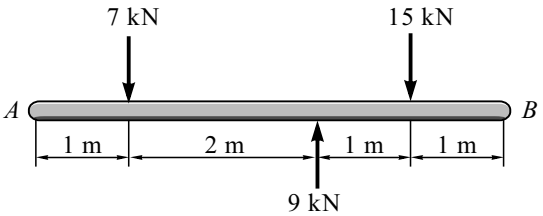

Fig. 2.E13

14. The parallel force system of five forces of 12 kN, 15 kN, 24 kN, 30 kN and 20 kN is shown in Fig. 2.E14. Reduce to the force and a couple at point P.

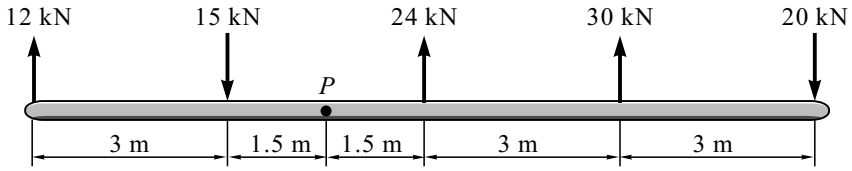

Fig. 2.E14

[***Ans.*** 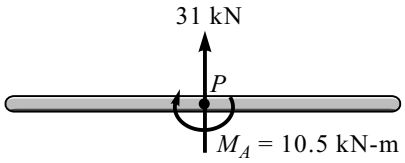

]

15. A 150 × 300 mm plate is subjected to four loads as shown in Fig. 2.E15. Find the resultant of the four loads and the two points at which the line of action of the resultant intersects the edges of the plate.

[***Ans.*** R = 224 N (θ), θ = 26.6°, 35 mm to the right of A and 132.7 mm below C]

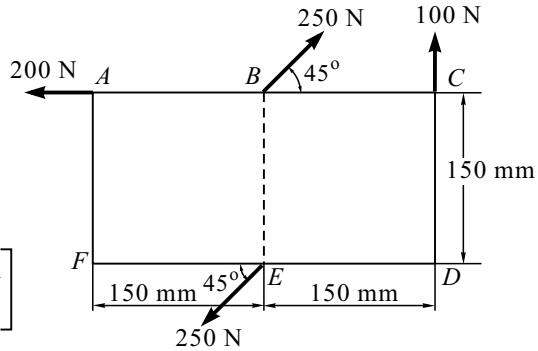

Fig. 2.E15

16. Determine the resultant of the non-concurrent non-parallel system of forces. F is in Newton and the coordinates are in metres.

F	20	30	50	10
θ_x	45°	120°	190°	270°
Point of application	(1,3)	(4,–5)	(5,2)	(–2,–5)

[***Ans.*** R = 54.5 N (θ), θ = 23.2° and intersection on x-axis = 3.52 m]

17. Determine completely the resultant of the four forces shown in Fig. 2.E17. Each force makes a 15° angle with the vertical except the 2000 N which is vertical.

[***Ans.*** R = 6830 N (↓) and at 16.79 m to the right of A]

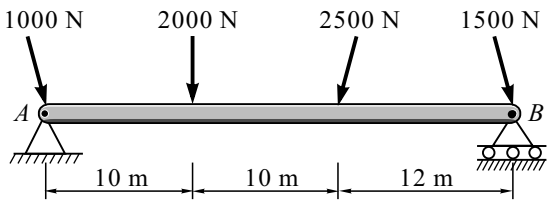

Fig. 2.E17

18. Solve for the resultant of the six loads on the truss shown in Fig. 2.E18. Three loads are vertical. The wind loads are perpendicular to the side. The truss is symmetrical.

[***Ans.*** $R = 10.65$ kN $(\searrow\theta)$, $\theta = 79.2^o$ and intersection on $AB = 15.41$ m to the right of A]

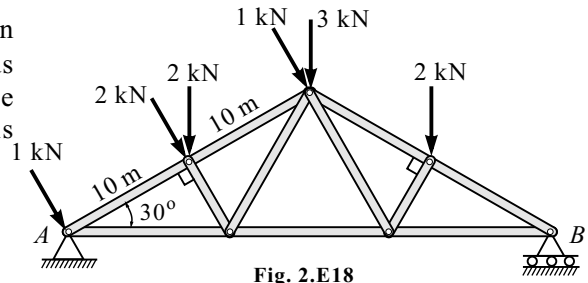

Fig. 2.E18

19. Determine the resultant of the forces acting on the bell crank shown in Fig. 2.E19.

[***Ans.*** $R = 1109$ N $(\theta\swarrow)$, $\theta = 79.6^o$ and intersection on $AO = 157.1$ mm to the left of O]

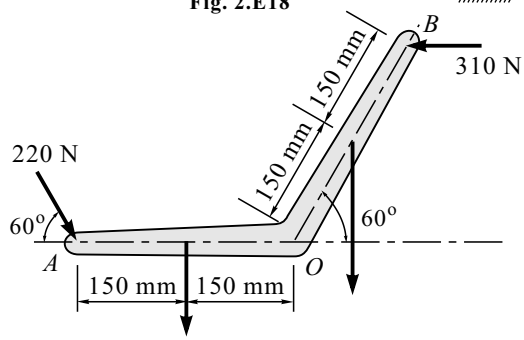

Fig. 2.E19

20. Determine the resultant of the force system in Fig. 2.E20 and locate it with respect to point A.

[***Ans.*** $R = 305$ N $(\searrow\theta)$, $\theta = 31.6^o$ and distance from A to the line of action of R is 249 mm]

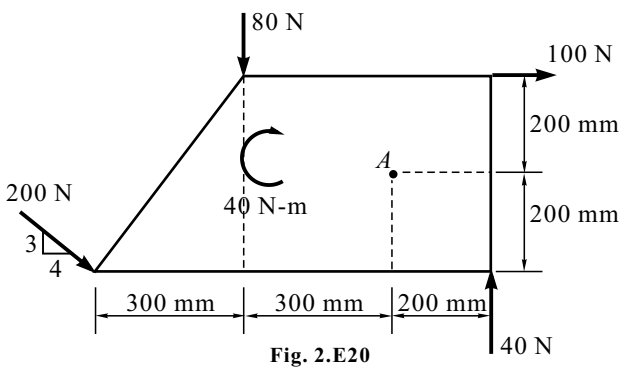

Fig. 2.E20

21. The 200 N force is the resultant of the couple and three forces, two of which are shown in Fig. 2.E21. Determine the third force and locate it with respect to point O.

[***Ans.*** $F = 269$ N $(\theta\nwarrow)$, $\theta = 48^o$ and distance from O to the line of action of F is 4.24 m]

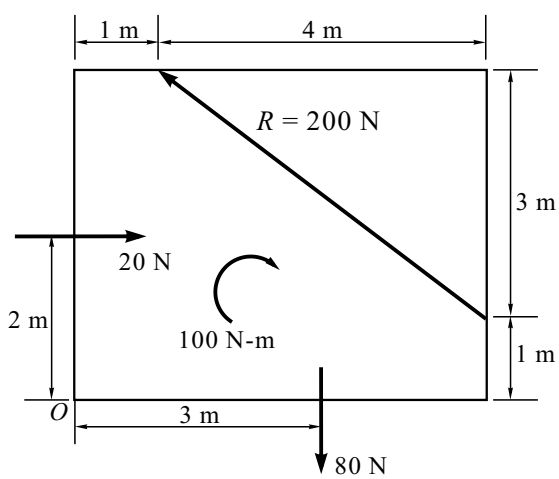

Fig. 2.E21

[II] Review Questions

1. What is a resultant?

2. What is meant by equilibrant?

3. State and prove **(a)** Varignon's theorem, and **(b)** Law of Parallelogram of Forces.

4 Justify, why Triangle Law of Forces is a corollary of Parallelogram Law of Forces?

5. The resultant of a system of parallel forces is zero. What does it signify?

6. Describe the procedure to find the

(a) resultant of concurrent force system

(b) resultant of parallel force system

(c) resultant of general force system

[III] Fill in the Blanks

1. _____ and _____ are equal in magnitude, opposite in direction and collinear in action.

2. Coplanar parallel forces are further subgrouped into _____ parallel forces and _____ parallel forces.

3. As per the right-hand-thumb rule sign convention anticlockwise moment is taken as _____ and clockwise moment is taken as _____.

4. If the resultant of number of parallel forces is not zero, then the system can be reduced to a _____ force.

5. If the resultant of number of parallel forces is zero, then the system may have a resultant _____ or may be in _____.

[IV] Multiple-choice Questions

Select the appropriate answer from the given options.

1. A single force which replaces the given force system having same effect is called _____.

(a) equilibrant **(b)** resultant **(c)** resistant **(d)** equivalent

2. Concurrent force system means _____.

(a) many forces passing through single point

(b) many forces passing through many points

(c) single force passing through single point

(d) None of the above

3. Force is completely defined by its _____.

(a) magnitude **(b)** direction **(c)** point of application **(d)** all of these

4. In a concurrent force system, if resultant is horizontal then _____.

(a) $\Sigma F_x = 0$ **(b)** $\Sigma F_y = 0$ **(c)** $\Sigma M = 0$ **(d)** $R = 0$

5. For finding resultant of two concurrent forces, one can use _____.

(a) Lami's theorem **(b)** Varignon's theorem **(c)** parallelogram law **(d)** Newton's law

6. "The moment of resultant of all the forces in a plane about any point is equal to the algebraic sum of moment of all the forces about the same point", is called the _____.

(a) Parallelogram law **(b)** Triangle law **(c)** Lami's theorem **(d)** Varignon's theorem

7. Position of resultant force in a parallel force system can be determined by _____.

(a) Varignon's theorem **(b)** Lami's theorem **(c)** Newton's law **(d)** Polygon law

8. If the resultant of a parallel force system is both a single resultant force (R) and a single resultant couple (M) then the system is said to perform _____.

(a) translation motion **(b)** rotational motion **(c)** plane motion **(d)** None of these

9. For finding resultant of a general force system, we use _____ equation(s).

(a) one **(b)** two **(c)** three **(d)** four

CHAPTER

3

EQUILIBRIUM OF A SYSTEM OF COPLANAR FORCES

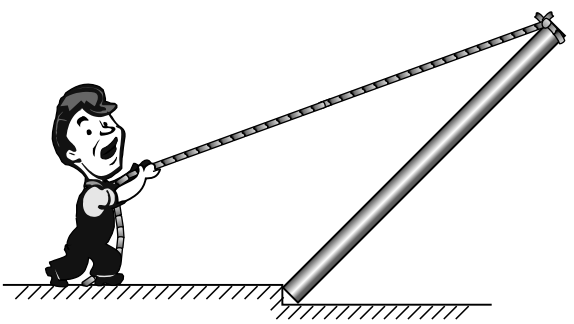

Learning Objectives

After reading this chapter, you will be able to answer the following questions:

- *What is meant by equilibrium condition of a body?*
- *What is a free body diagram and what is its importance?*
- *What are the different types of supports?*
- *What are the different types of loads?*
- *What do you mean by the concept of two-force member?*
- *What is meant by the concept of three-force member?*
- *What is Lami's Theorem and what are its limitations?*

3.1 INTRODUCTION

In the previous chapter, we have discussed the different types of force systems (i.e., *concurrent*, *parallel* and *general*) which were easily identified and their resultants were calculated. In this chapter, we shall discuss the *equilibrium analysis of engineering problem* for which we must originate the force system.

Here, we shall introduce the *free body diagram* which is perhaps the most important physical concept in this text. This is always the initial step in solving a problem and often the most critical step. The matter of this chapter is very important for dealing with the subject. Here, we shall discuss many basic concepts, such as *two-force body*, *three-force body*, *Lami's Theorem*, *types of supports*, *types of loads*, *analysis of simple body*, *analysis of composite bodies*, *frames,* etc.

3.2 EQUILIBRANT

A *force* which is *equal, opposite* and *collinear to the resultant of a concurrent force system* is known as the *equilibrant of the concurrent force system*.

Equilibrant is the force which, when applied to a body acted by the concurrent force system, keeps the body in equilibrium.

A *single force* which brings the *system to equilibrium*, the equilibrant is *equal in magnitude*, *opposite in direction* and *collinear to resultant force*.

The force that cancels the effect of the force system acting on the body is also known as *equilibrant*.

3.3 TYPES OF EQUILIBRIA

1. Stable Equilibrium

A body is said to be in stable equilibrium if

- it is initially in a state of static equilibrium, and
- on giving a slight displacement an additional force is set up which tends to restore the original position of the body.

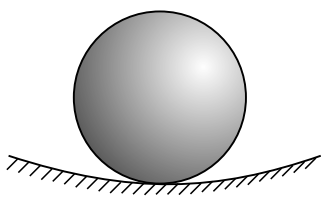

Fig. 3.3-i

2. Unstable Equilibrium

A body is said to be in unstable equilibrium if

- it is initially in a state of static equilibrium,
- an additional force is set up on slight displacement which tends to push it away from the original position of the body, and
- it does not return back to its original position after being slightly displaced by a force.

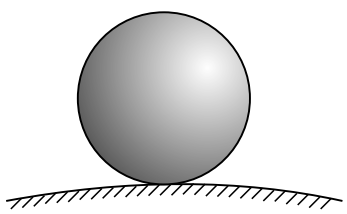

Fig. 3.3-ii

3. Neutral Equilibrium

A body is said to be in neutral equilibrium if

- it is initially in a state of static equilibrium,
- no additional force is set up on slight displacement from initial position, and
- it occupies a new position and remains in static equilibrium in this new position.

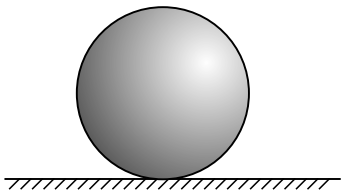

Fig. 3.3-iii

3.4 CONDITIONS OF EQUILIBRIUM FOR VARIOUS FORCE SYSTEMS

A body is said to be in equilibrium when it is at rest or continues to be in uniform motion. According to Newton's first law of motion, *the body remains at rest or moves with uniform velocity if the resultant force acting on body is zero.*

In Chapter 2, resultant of concurrent force system, resultant of parallel force system and resultant of general force system were determined by obtaining the sum of the forces of the system $R = \Sigma F_x$ and the sum of the moments of the forces with respect to point $M_R = \Sigma M$.

When all these sums are zero for any force system its resultant is zero and the body on which the system acts is in equilibrium.

In simple words, when *the resultant of force system acting on a body is zero, the body is in equilibrium.*

Thus, the resultant force R and resultant moment (couple) M_R both are zero, and we have the equilibrium equations

$$R = \Sigma F = 0 \quad \text{and} \quad M_R = \Sigma M = 0 \qquad \text{...(3.1)}$$

Categories of Equilibrium

1. Equilibrium of Collinear Force System : If forces are collinear then only one axis contains all the forces. Therefore, only one force equation in the direction of the force is required.

$$\Sigma F_x = 0$$

Example

$$\Sigma F_x = 0$$

$$F_1 - F_2 + F_3 = 0$$

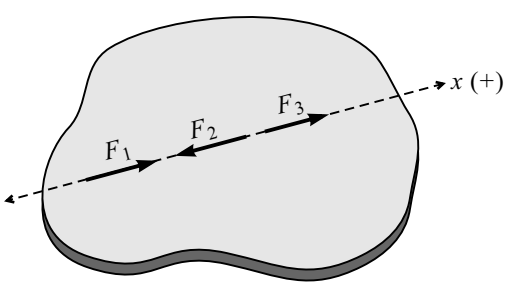

Fig. 3.4-i

2. **Equilibrium of Concurrent Force System :** If all the forces in coplanar force system are concurrent then the following sets of equations can be used:

(a) $\Sigma F_x = 0$

$\Sigma F_y = 0$

Example

$$\Sigma F_x = 0$$

$$F_1 \cos\theta_1 - F_2 \cos\theta_2 - F_3 \sin\theta_3 = 0$$

$$\Sigma F_y = 0$$

$$F_1 \sin\theta_1 + F_2 \sin\theta_2 - F_3 \cos\theta_3 = 0$$

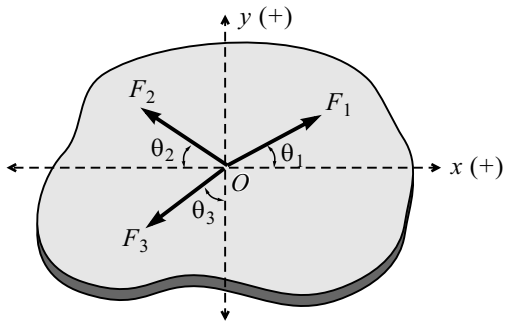

Fig. 3.4-ii

(b) $\Sigma F_x = 0$

$\Sigma M_A = 0$ (point A should not lie on y-axis)

(c) $\Sigma F_y = 0$

$\Sigma M_A = 0$ (point A should not lie on x-axis)

3. **Equilibrium of Parallel Force System :** If all the forces in coplanar force system are parallel then the following sets of equations can be used:

(a) $\Sigma F = 0$

$\Sigma M = 0$

Example

$$\Sigma F_x = 0$$

$$-F_1 - F_2 + F_3 = 0$$

$$\Sigma M_O = 0$$

$$F_1 \times d_1 - F_2 \times d_2 - F_3 \times d_3 = 0$$

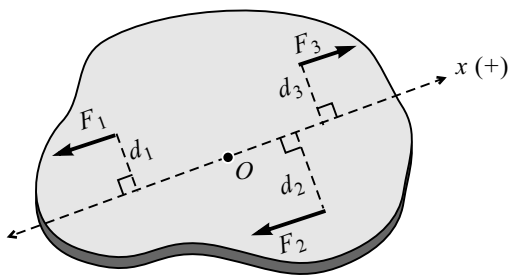

Fig. 3.4-iii

(b) $\Sigma M_O = 0$

$\Sigma M_A = 0$ (line OA should not be parallel to the force system)

4. **Equilibrium of General Force System :** If all the forces and couples acting in a plane form general force system then the following sets of equations can be used:

(a) $\Sigma F_x = 0$

$\Sigma F_y = 0$

$\Sigma M = 0$

Example

$$\Sigma F_x = 0$$

$$F_1 \cos\theta_1 - F_2 \sin\theta_2 - F_3 \cos\theta_3 = 0$$

$$\Sigma F_y = 0$$

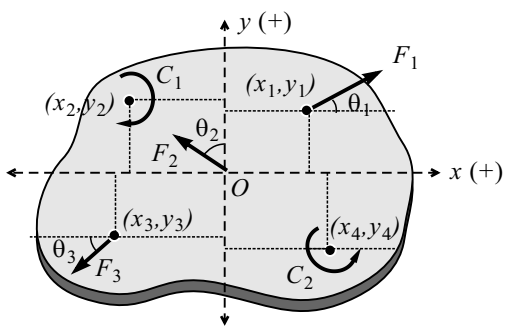

Fig. 3.4-iv

$$F_1 \sin\theta_1 + F_2 \cos\theta_2 - F_3 \sin\theta_3 = 0$$

$$\Sigma M_O = 0$$

$$-F_1 \cos\theta_1 \times y_1 + F_1 \sin\theta_1 \times x_1 - F_3 \cos\theta_3 \times y_3 + F_3 \sin\theta_3 \times x_3 - C_1 + C_2 = 0$$

(b) $\Sigma F_x = 0$

$\Sigma M_O = 0$

$\Sigma M_A = 0$ (line OA should not be perpendicular to the x-axis)

(c) $\Sigma M_O = 0$

$\Sigma M_A = 0$

$\Sigma M_A = 0$ (point O, A and B should not be collinear)

3.5 FREE BODY DIAGRAM (F.B.D.)

*The **Free Body Diagram (F.B.D.)** is a sketch of the body showing all active and reactive forces that acts on it after removing all supports with consideration of geometrical angles and distance given.*

To investigate the equilibrium of a body, we remove the supports and replace them by the reactions which they exert on the body.

The first step in equilibrium analysis is to identify all the forces that act on the body, which is represented by a free body diagram. Therefore, the free body diagram is the most important step in the solution of problems in mechanics.

Importance of F.B.D.

1. The sketch of F.B.D. is the key step that translates a physical problem into a form that can be analysed mathematically.
2. The F.B.D. is the sketch of a body, a portion of a body or two or more connected bodies completely isolated or free from all other bodies, showing the force exerted by all other bodies on the one being considered.
3. F.B.D. represents all active (applied) forces and reactive (reactions) forces. Forces acting on the body that are not provided by the supports are called *active force* (weight of the body and applied forces). *Reactive forces* are those that are exerted on a body by the supports to which it is attached.
4. F.B.D. helps in identifying known and unknown forces acting on a body.
5. F.B.D. helps in identifying which type of force system is acting on the body so by applying appropriate condition of equilibrium, the required unknowns are calculated.

Procedure for Drawing F.B.D.

1. Draw a neat sketch of the body assuming that all supports are removed.
2. F.B.D. may consist of an entire assembled structure or any combination or part of it.
3. Show all the relevant dimensions and angles on the sketch.
4. Show all the active forces on corresponding point of application and insert their magnitude and direction, if known.
5. Show all the reactive forces due to each support.

6. The F.B.D. should be legible and neatly drawn and of sufficient size to show dimensions, since this may be needed in computation of moments of forces.
7. If the sense of reaction is unknown, it should be assumed. The solution will determine the correct sense. A positive result indicates that the assumed sense is correct, whereas a negative result means the assumed sense was incorrect, so the correct sense is opposite to the assumed sense.
8. Use principle of transmissibility wherever convenient.

Example 1

A sphere having weight W is resting on the horizontal floor. It is free to move along the horizontal plane but cannot move vertically downward. A sphere exerts a vertical push against the horizontal surface at the point of contact A. As per Newton's third law, action and reaction are equal and opposite. In F.B.D., we remove the supporting horizontal plane and replace it by reactive force R_A. Weight W is the active force.

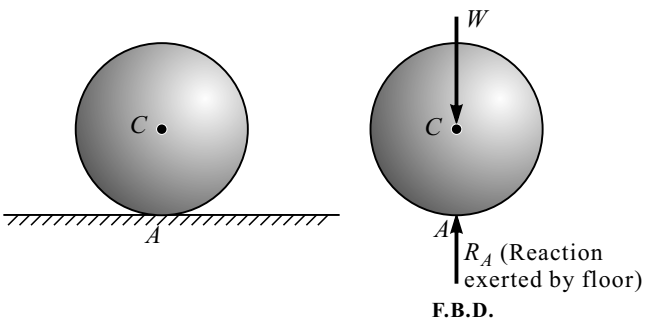

Note : In this chapter all contact surface are assumed to be a frictionless. Therefore, no F.B.D. is represented with frictional force.

Example 2

A sphere having weight W is freely suspended by string connected to ceiling. Here, sphere can be swing as pendulum but cannot move vertically down as attached by string, thus the sphere exerts a downward pull on the end of the supporting string. In F.B.D., we remove the string and replace it by reactive force, i.e., the tension T in the string. Weight W is the active force.

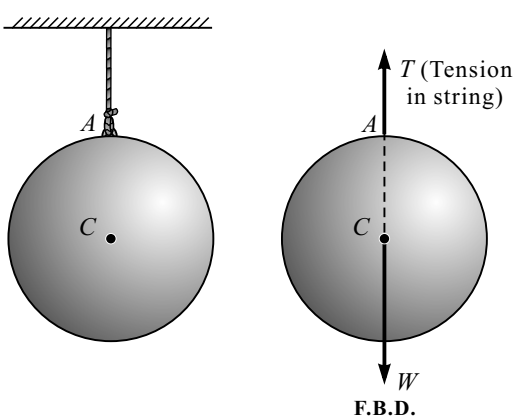

Example 3

A sphere having weight W is suspended by a string but rest against the vertical wall. Here, the sphere is constrained to move downward by string and towards left due to vertical wall. The sphere not only pulls down on string BC but also pushes to the left against the vertical wall at A. In F.B.D. we remove string and vertical wall and replace by tension T and reaction R_A. Weight W is the active force.

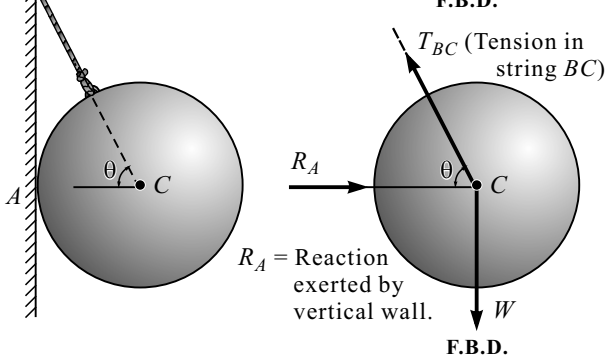

Example 4

Ladder having weight W resting against the smooth horizontal floor and smooth vertical wall. In F.B.D. the vertical wall and horizontal floor are removed and reaction R_A and R_B are shown as the reactive forces and weight W is the active force of ladder.

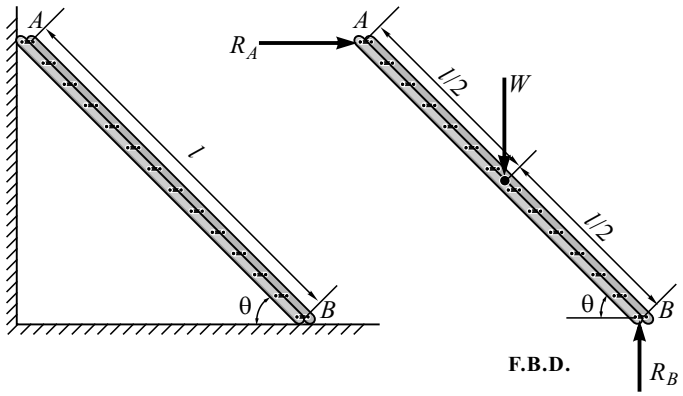

Example 5

Ladder having weight W resting against the rough horizontal floor and smooth vertical wall. R_A is reactive force exerted by vertical wall and R_B is the reactive force exerted by horizontal floor on ladder. F is the reactive frictional force between horizontal floor and ladder, weight W is the active force of ladder.

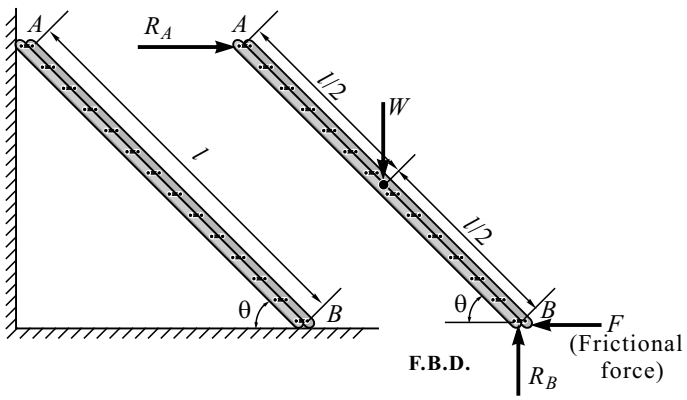

Example 6

A block of m kg mass is suspended by ropes as shown in the figure.

$T_{AB} \Rightarrow$ Tension in rope AB

$T_{BC} \Rightarrow$ Tension in rope BC

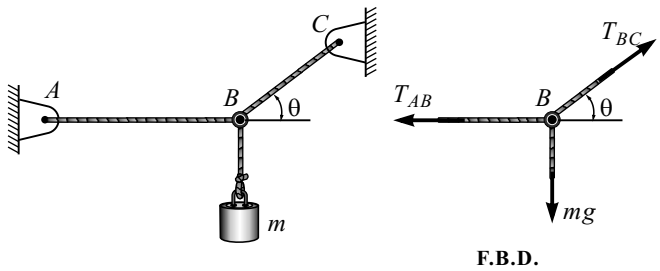

Example 7

A cylinder of weight W is supported on a smooth horizontal plane by a cord AC and pulled by applied force P as shown in the figure.

$T_{AC} \Rightarrow$ Tension in cord AC

$R_B \Rightarrow$ Reaction exerted by the floor on cylinder at B

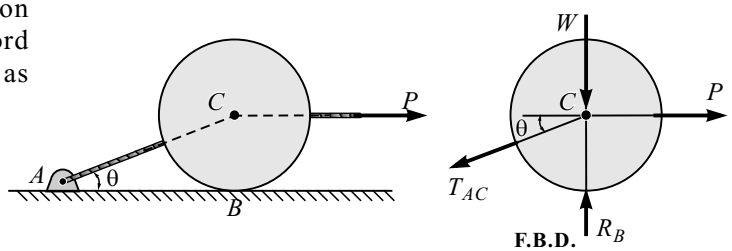

Note : String, rope, cord, cable, wire, thread, chain always experiences tension which is shown by drawing an arrow away from joint or body in F.B.D.

3.6 TYPES OF SUPPORTS

While drawing F.B.D., the most important step to master is the determination of the support reactions. The structure in the field may be of various types such as beam, truss, frame, levers ladder, etc. They are supported with specific arrangements.

Generally, the support offers reactions. Different types of supports and its reactions are classified as following :

1. **Smooth Surface Contact :** When a body is in contact with a smooth (frictionless) surface at only one point, the reaction is a force normal to the surface, acting at the point of contact.

(i)

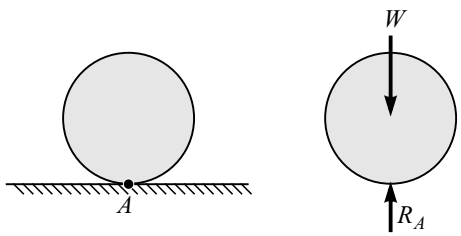

Fig. 3.6(1)-i

(ii)

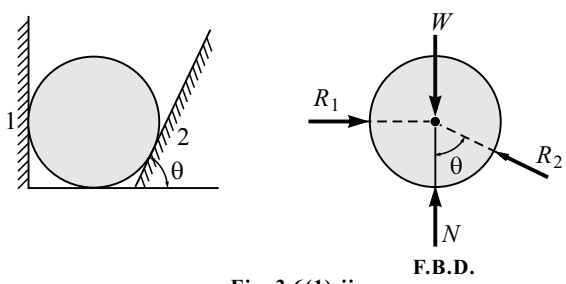

Fig. 3.6(1)-ii

(iii)

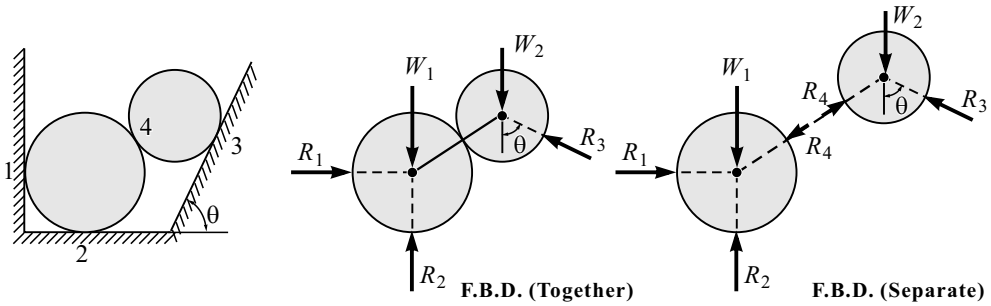

Fig. 3.6(1)-iii

(iv)

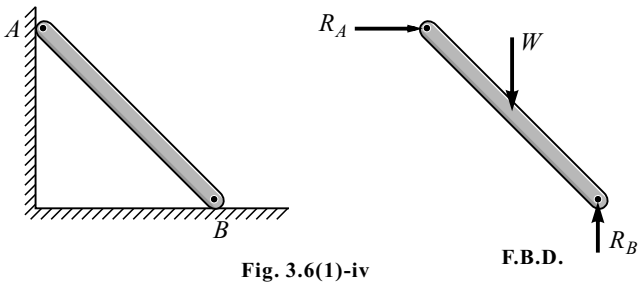

Fig. 3.6(1)-iv

2. **Roller Support :** A roller support is equivalent to a frictionless surface. It can only exert a force that is perpendicular to the supporting surface. The magnitude of the force is then the only unknown force introduced in a F.B.D. when the support is removed. The roller support is free to roll along the surface on which it rests. Since the linear displacement in normal direction to surface of roller is restricted, it offers a reaction in normal direction to surface of roller. For example, a sliding door slides smoothly with the help of a roller support, whereas a conveyer belt can move smoothly on roller support.

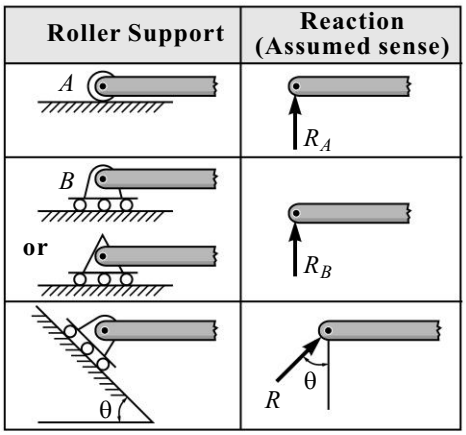

Fig. 3.6(2)

3. **Hinge (Pin) Support :** The hinge support allows free rotation about the pin end but it does not allows linear displacement of that end. Since linear displacements are restricted in horizontal and vertical directions, the reaction offered at hinge support (say R_A at θ) is resolved into two components, i.e., H_A and V_A. The direction of these two components are uncertain. Therefore, they are initially assumed in F.B.D.

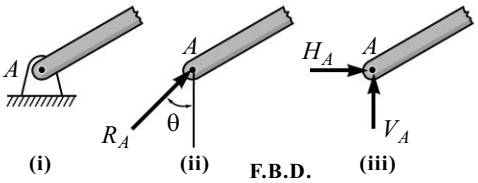

Fig. 3.6(3)

A pin is a cylinder that is slightly smaller than the hole into which it is inserted [refer to Fig. 3.6(3)-i]. Neglecting friction, the pin can only exert a force that is normal to the contact surface (say at point A) shown as R_A [refer to Fig. 3.6(3)-ii]. A pin support thus introduces two unknown, the magnitude of R_A and the angle θ that specifies the direction of R_A. This reaction R_A at θ can be resolved into two components, i.e., horizontal components (H_A) and vertical component (V_A). One should identify the figures given in Fig. 3.6(3)-iv as pin support.

For example, opening and closing of a door is possible by hinges. Same principle applies in the opening and closing of a suitcase or a laptop too.

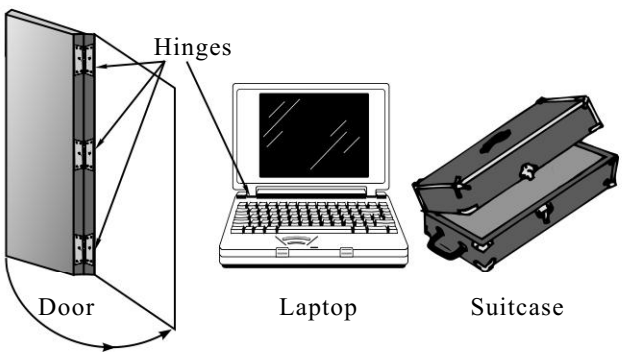

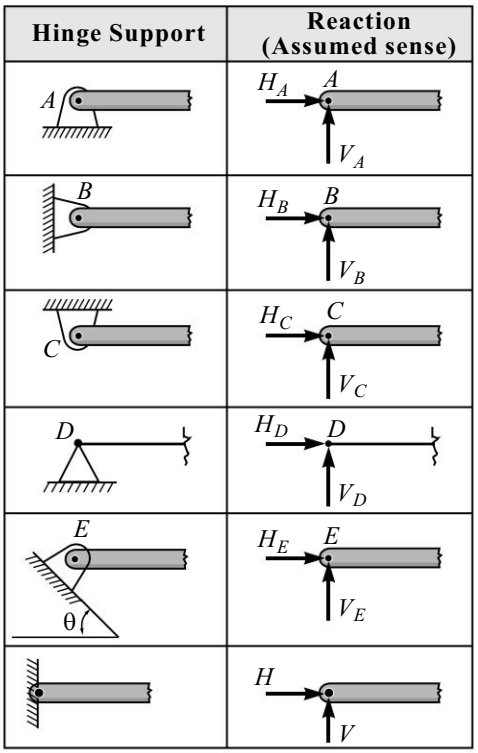

Fig. 3.6(3)-iv

4. **Fixed (Built in) Support :** When the end of a beam is fixed (built in) then that support is said to be fixed support. A fixed support neither allows linear displacement nor rotation of a beam. Due to these restrictions, the components reaction offered at fixed supports are horizontal component H_A, vertical component V_A and couple component M_A. These components are shown in assumed direction. Refer to Fig. 3.6(4).

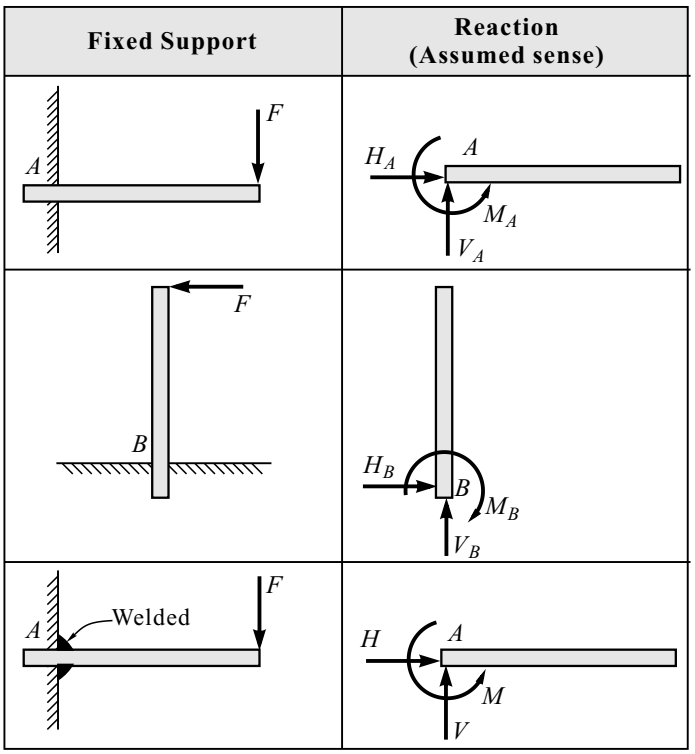

Fig. 3.6(4)

5. **Freely Sliding Guide :** A collar or slider which is free to move along smooth guides can support a force normal to the guide only.

   For example, a slider is free to move along a horizontal slot, whereas a collar is free to move along a vertical rod (guide).

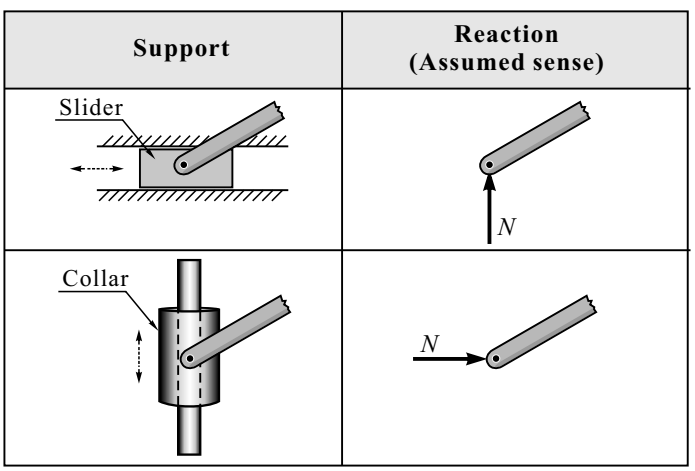

Fig. 3.6(5)

6. **Gravitational Attraction :** The resultant of gravitational attraction on all elements of a body of mass m is the weight $W = mg$ and acts towards the earth through the centre of mass G.

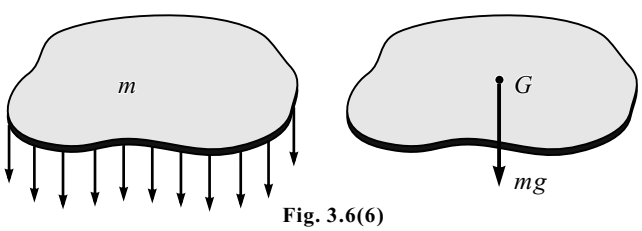

Fig. 3.6(6)

7. **Spring Force :** Spring force is given by the relation $F = kx$, where k is the spring constant and x is the deformation of the spring. Deformation may be due to tension if spring is stretched and compression if compressed.

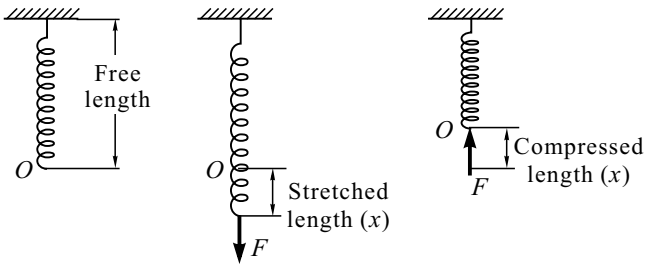

Fig. 3.6(7)

8. **Inextensible String, Cable, Belt Rope, Cord, Chain or Wire :** The force developed in rope is always a tension away from the body in the direction of rope. When one end of a rope is connected to a body then the rope is not to be considered as a part of the system and it is replaced by tension in F.B.D. as shown in Fig. 3.6(8).

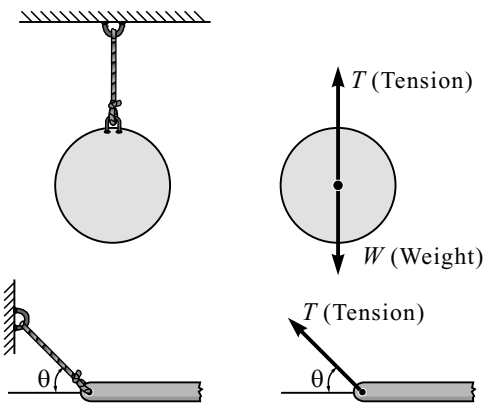

Fig. 3.6(8)

9. **Rope and Frictionless Pulley Arrangement :** When a rope is passing over a frictionless pulley then the tension on both sides of the rope is same as shown in Figs. 3.6(9)-i, ii and iii.

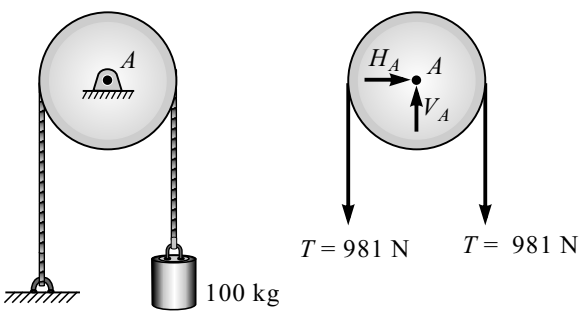

Fig. 3.6(9)-i

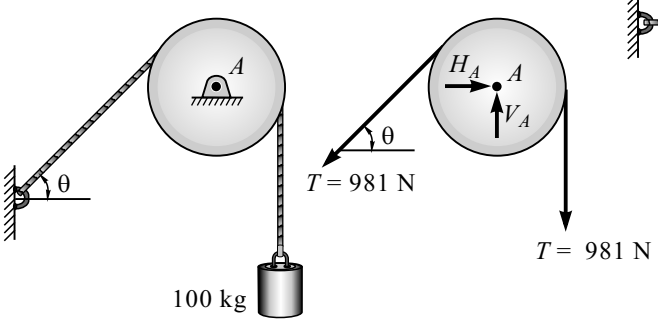

Fig. 3.6(9)-ii

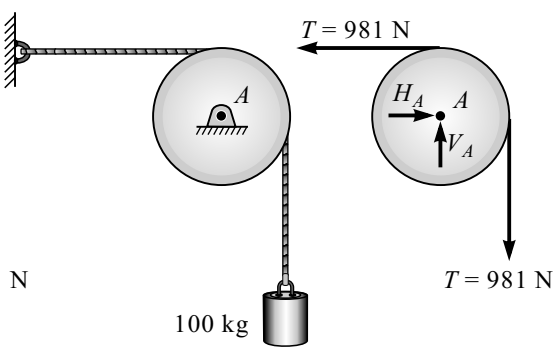

Fig. 3.6(9)-iii

10. Transfer of Tension of Rope on Frictionless Pulley from Circumference to the Centre of Pulley : For a frictionless pulley, tension on both sides of the rope is equal. Therefore, in F.B.D. of pulley, the tension on two sides can be shown at the centre of pulley.

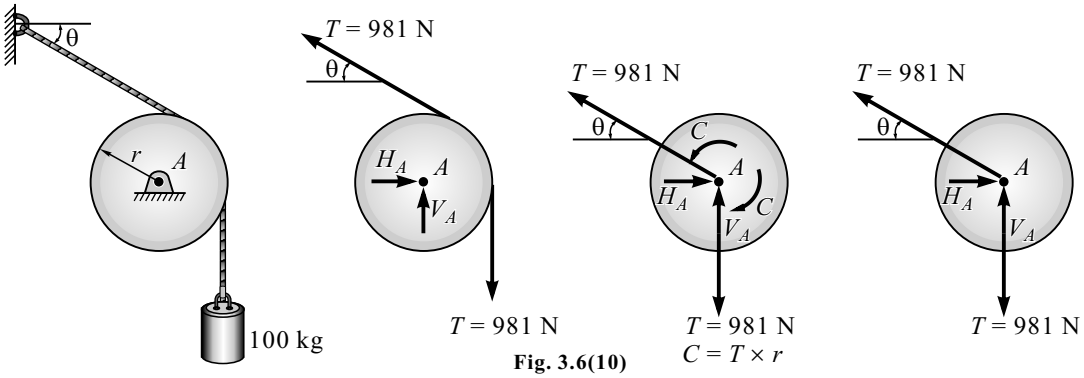

Fig. 3.6(10)

***Reason* :** We know that the force can be transferred from one point to the other on the same rigid body by moving at the new point with parallel line of action and adding a couple whose magnitude is equal to the moment of force about new transferred point, here it is centre A. Since both the forces (tension of rope) are tangential to the circle, they are at perpendicular distance, equal to radius of pulley. So the two forces of same magnitude when transferred to centre A, also carry a couple of equal magnitude $C = T \times r$ but opposite in sense. Hence, they cancel each other.

11. Straight Rod Supported by Knife Edge (Fulcrum) :

A straight rod having weight W rests against a horizontal smooth surface and knife edge support at B. It is an exceptional case where the reaction exerted by knife edge is normal to straight rod.

In the given example, A is the smooth surface and we know reaction R_A will be perpendicular to the smooth surface. Here our emphasis is on the knife edge support which is at B and it exerts the normal reaction R_B perpendicular to the straight rod.

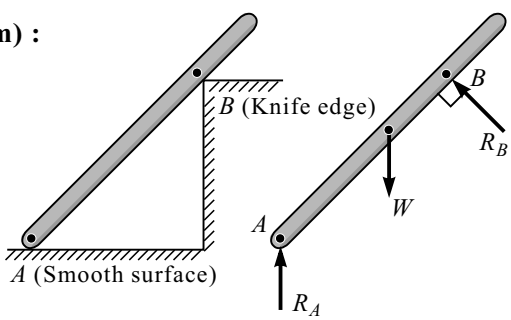

Fig. 3.6(11)

12. Rigid Body Supported by Knife Edge : A cylinder having weight W resting against a rectangular block is pulled by force P which is just enough to roll the cylinder over the rectangular block. Since the cylinder is just about to roll over the rectangular block, the reaction at contact B will become zero. The cylinder is subjected to two active forces, i.e., self-weight W and applied force P and one reactive force R due to knife edge support by rectangular block. We know by three-force principle, three non-parallel forces must form concurrent force system for equilibrium condition. Therefore W, P and R must pass through the point of concurrency as shown in Fig. 3.6(12).

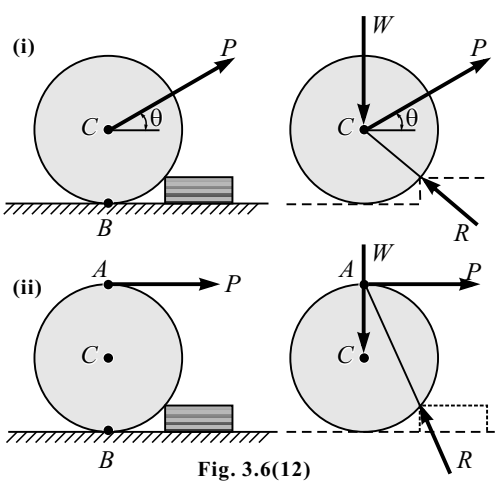

Fig. 3.6(12)

3.7 EQUILIBRIUM OF TWO-FORCE SYSTEM

Two-Force Principle

If a body is in equilibrium and is acted upon by only two forces then these two forces must be equal in magnitude, opposite in direction and collinear.

Proof

Consider a corner of a plate acted upon by two forces F_1 and F_2 at the end A and B as shown in Fig. 3.7-i.

Fig. 3.7-i

If the plate is to be in equilibrium, one of the equation of equilibrium, i.e., $\Sigma M = 0$ must be satisfied. Let us take moment at A. As F_1 is acting at A its moment will be zero, but for the moment of F_2 to be zero, the line of action of F_2 must pass through A as shown in Fig. 3.7-ii.

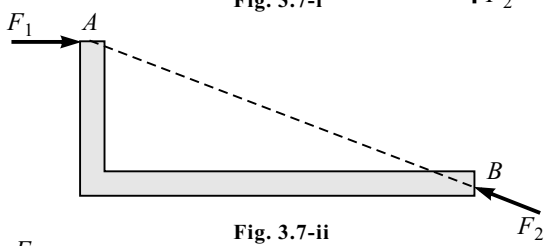

Fig. 3.7-ii

Now second equation of equilibrium, i.e., $\Sigma F = 0$ must also be satisfied. It is possible if and only if the force F_1 and F_2 are equal in magnitude, opposite in direction and collinear as shown in Fig. 3.7-iii.

Hence, proved.

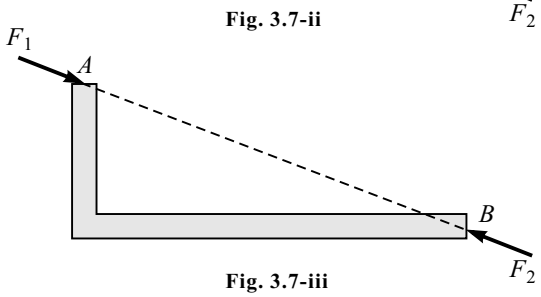

Fig. 3.7-iii

Special Case of Two-force Member

If a member (body) is a straight rod and subjected to two forces (pulling or pushing) having equal magnitude, opposite direction and collinear action, then the member is either in tension (pulling forces) or in compression (pushing forces).

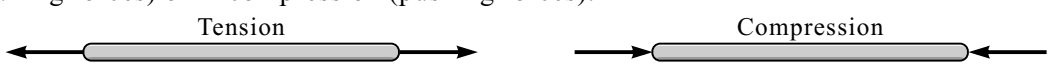

Fig. 3.7-iv

Tension is represented by an arrow drawn away from joint or body whereas compression is represented by an arrow drawn towards the joint or body.

How to identify two-force member (body) in given structure?

1. The member must be connected to other bodies at its extreme end by frictionless pins.
2. No external force or couple must act in between its end joints.
3. Self-weight of member must be negligible.

Why identify the two-force member in a given structure?

1. Identification of two-force member is important because it helps in simplifying the solution to great extent.
2. There is no need of drawing F.B.D. of a two-force member separately. It can be replaced by two equal and opposite forces (assumed sense) having line of action along the end joints.

3.8 EQUILIBRIUM OF A THREE-FORCE SYSTEM

If a body is in equilibrium and subjected to three coplanar forces then the force system acting on the body should be either concurrent or parallel force system.

Three-Force Principle

If a body is in equilibrium and subjected to three non-parallel coplanar forces then it must be concurrent.

Proof

1. Let three non-parallel coplanar forces F_1, F_2 and F_3 act on a body at points A, B and C respectively as shown in Fig. 3.8-i.

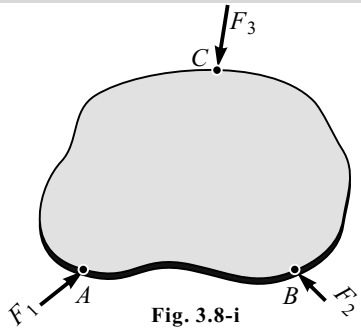

Fig. 3.8-i

2. Transmit the forces F_1 and F_2 along their line of action at the intersection point say O. Replace these two forces by their resultant, say R, which will act through point O as shown in Fig. 3.8-ii.

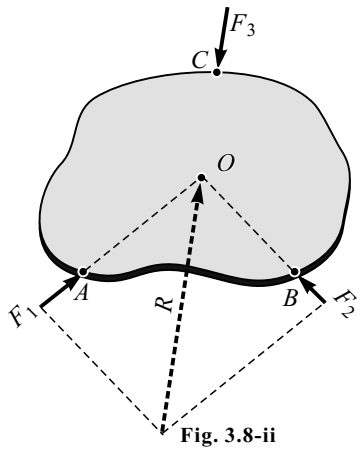

Fig. 3.8-ii

3. Now only two forces are acting on a body, i.e., R and F_3, shown in Fig. 3.8-iii. We know if a body is in equilibrium and subjected to only two forces then these two forces must be equal in magnitude, opposite in direction and collinear.

Therefore, the force F_3 must also pass through the point O.

If the body is in equilibrium under the action of three non-parallel force, then the above method often simplifies the solution.

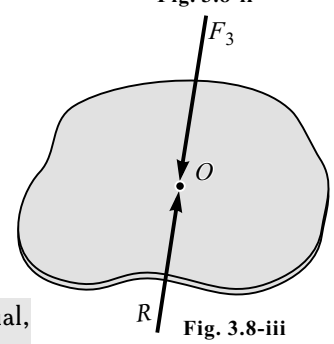

Fig. 3.8-iii

Note : In a three-force system, the resultant of any two forces becomes equal, opposite and collinear with the third force to attain the equilibrium.

Example

Determine the tension in cords AB and BC for equilibrium of 20 kg block shown in the given figure.

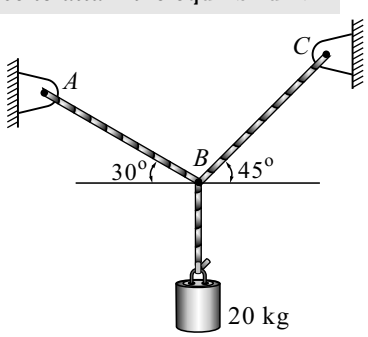

Given

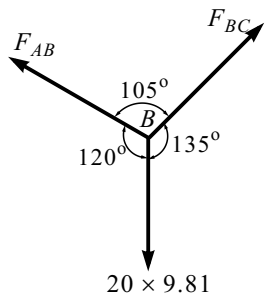

F.B.D. of point *B*

Solution

(i) Consider the F.B.D. of Point B.

(ii) By Lami's theorem, we have

$$\frac{20 \times 9.81}{\sin 105^\circ} = \frac{F_{AB}}{\sin 135^\circ} = \frac{F_{BC}}{\sin 120^\circ}$$

$\therefore F_{AB} = 143.6$ N $\quad \therefore F_{BC} = 175.91$ N

3.9 THREE-FORCE TRIANGLE THEOREM

Three non-parallel forces can be in equilibrium only when they lie in one plane, intersect in one point and their free vectors build a closed triangle.

In other words, if three concurrent forces are in equilibrium then the arrangement of these three forces in tip to tail fashion will form a closed triangle.

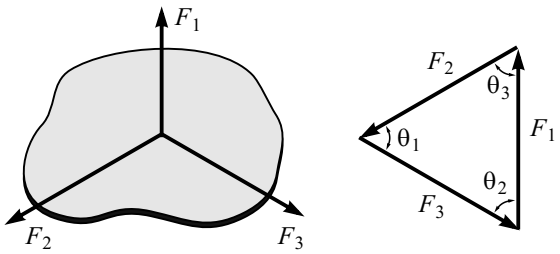

Fig. 3.9

Referring to the force triangle shown in Fig. 3.9, we can use sine rule to solve the problem.

i.e., $\dfrac{F_1}{\sin\theta_1} = \dfrac{F_2}{\sin\theta_2} = \dfrac{F_3}{\sin\theta_3}$

Note : If the body is in equilibrium under the action of three non-parallel forces, the above method often simplifies the solution rather than using the equilibrium equations.

Example

Determine the tension in cords *AB* and *BC* for equilibrium of a 20 kg block shown in the given figure.

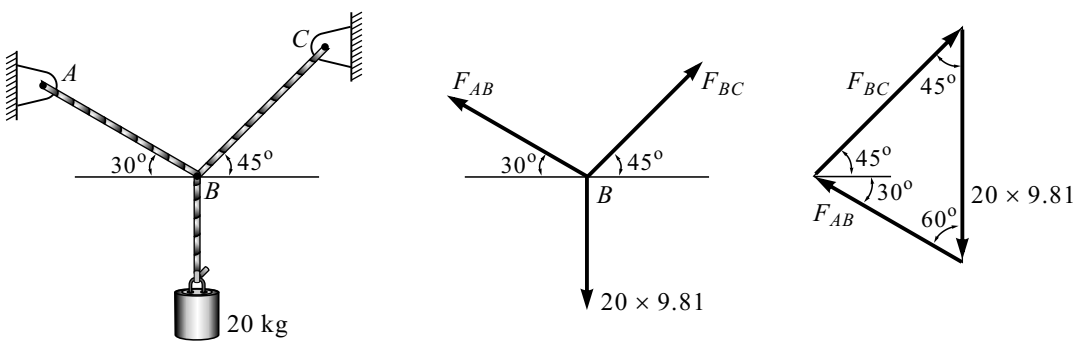

Given **F.B.D. of point *B*** **Force Triangle**

Solution

Draw the force triangle as shown in the figure.

By sine rule,

$$\frac{20 \times 9.81}{\sin 75^\circ} = \frac{F_{AB}}{\sin 45^\circ} = \frac{F_{BC}}{\sin 60^\circ}$$

$\therefore F_{AB} = 143.63$ N

$\therefore F_{BC} = 175.91$ N

3.10 LAMI'S THEOREM

If three concurrent coplanar forces acting on a body having same nature (i.e., pulling or pushing) are in equilibrium, then each force is proportional to the sine of angle included between the other two forces.

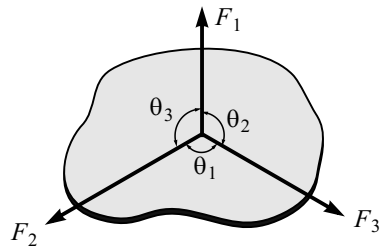

Fig. 3.10-i

By Lami's theorem, we have

$$\frac{F_1}{\sin\theta_1} = \frac{F_2}{\sin\theta_2} = \frac{F_3}{\sin\theta_3}$$

Proof

By three-force triangle theorem, we get a closed triangle. Refer to Fig. 3.10-ii.

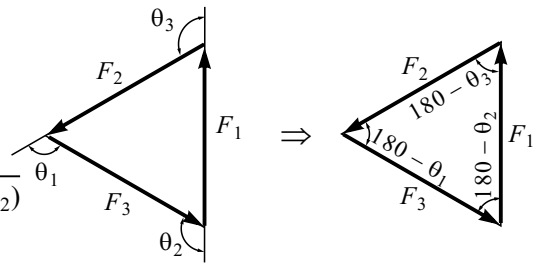

Fig. 3.10-ii

By sine rule, we have

$$\frac{F_1}{\sin(180^o - \theta_1)} = \frac{F_2}{\sin(180^o - \theta_2)} = \frac{F_2}{\sin(180^o - \theta_2)}$$

$$\therefore \frac{F_1}{\sin\theta_1} = \frac{F_2}{\sin\theta_2} = \frac{F_3}{\sin\theta_3}$$

Hence, proved.

Limitations of Lami's Theorem

1. It is applicable to three non-parallel coplanar concurrent forces only.
2. Nature of three forces must be same (i.e., pulling or pushing)

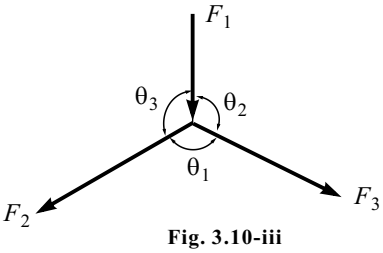

Fig. 3.10-iii

In Fig. 3.10-iii, F_2 and F_3 forces are pulling forces but F_1 is pushing force. By principle of transmissibility, one can transmit F_1 on other side of point of concurrency to make three forces of same nature (i.e., pulling) and can apply Lami's theorem with due consideration of geometrical change in angles.

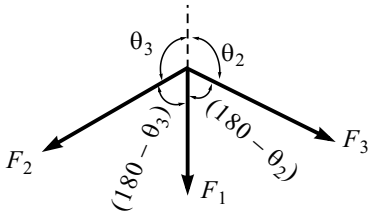

Fig. 3.10-iv

Easy Alternative Vector Approach

Since force is a vector quantity, negative sign if placed, indicates opposite sense. So, one can prefer to change the force F_1 by introducing negative sign and then applying Lami's theorem as shown in Fig. 3.10-v.

$$\frac{-F_1}{\sin\theta_1} = \frac{F_2}{\sin\theta_2} = \frac{F_3}{\sin\theta_3}$$

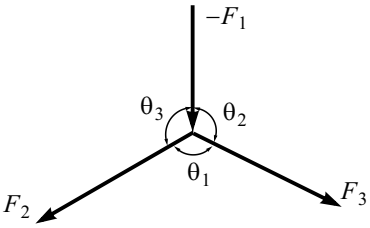

Fig. 3.10-v

Solved Problems on Lami's Theorem

Problem 1

Find the tension in each rope in Fig. 3.1(a).

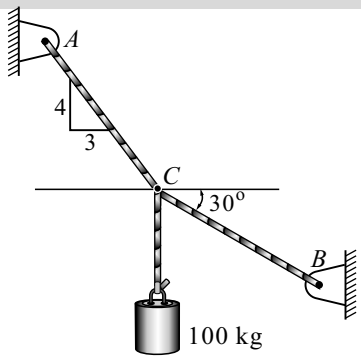

Fig. 3.1(a)

Solution

(i) Consider the F.B.D. of point C.

(ii) By Lami's theorem,

$$\frac{981}{\sin 156.87^\circ} = \frac{T_{AC}}{\sin 60^\circ} = \frac{T_{BC}}{\sin 143.13^\circ}$$

$T_{AC} = 2162.76$ N

$T_{BC} = 1498.41$ N

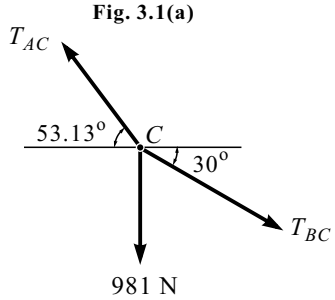

Fig. 3.1(b) : F.B.D.

Problem 2

Block $P = 5$ kg and block Q of m kg mass is suspended through the chord is in the equilibrium position as shown in Fig. 3.2(a). Determine the mass of block Q.

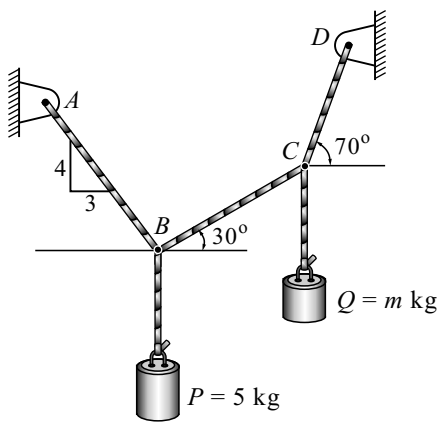

Fig. 3.2(a)

Solution

(i) Consider the F.B.D. of point B.

(ii) By Lami's theorem,

$$\frac{5 \times 9.81}{\sin 96.87^\circ} = \frac{T_{AB}}{\sin 120^\circ} = \frac{T_{BC}}{\sin 143.13^\circ}$$

$\therefore T_{AB} = 42.79$ N

$T_{BC} = 29.64$ N

(iii) Consider the F.B.D. of point C.

(iv) By Lami's theorem,

$$\frac{m \times 9.81}{\sin 140^\circ} = \frac{29.64}{\sin 160^\circ}$$

$\therefore m = 5.678$ kg

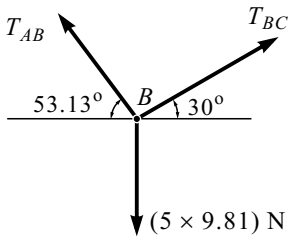

Fig. 3.2(b) : F.B.D. of B

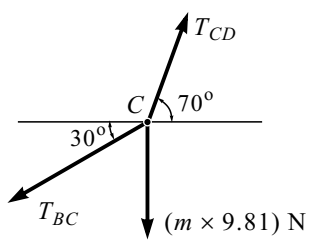

Fig. 3.2(c) : F.B.D. of C

Problem 3

Find force transmitted by cable *BC* shown in Fig. 3.3(a). *E* is a frictionless pulley, where *B* and *D* are weightless rings.

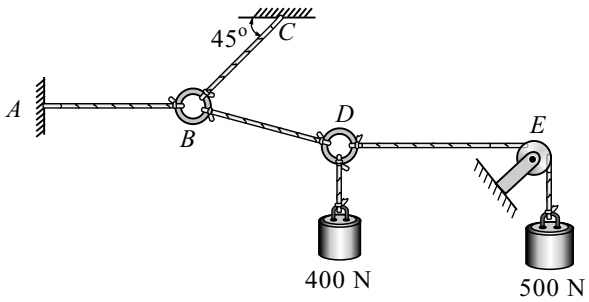

Fig. 3.3(a)

Solution

Let T_{BA} be the tension in the string *BA*

and T_{BC} be the tension in the string *BC*.

(i) Consider the F.B.D. of portion *BD*.

From equilibrium condition,

$\Sigma F_y = 0$

$T_{BC} \sin 45^\circ = 400$

$\therefore T_{BC} = 565.69 \text{ N} \quad (\measuredangle 45^\circ)$

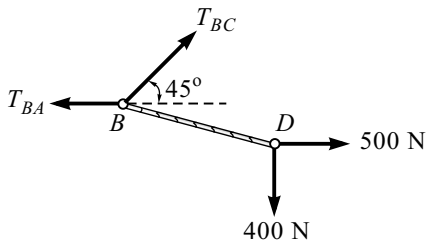

Fig. 3.3(b) : F.B.D. of String BD

Problem 4

Two ropes are tied together at *B* as shown in Fig. 3.4(a). If the maximum permissible tension in each rope is 3000 N, what is the maximum force *P* that can be applied?

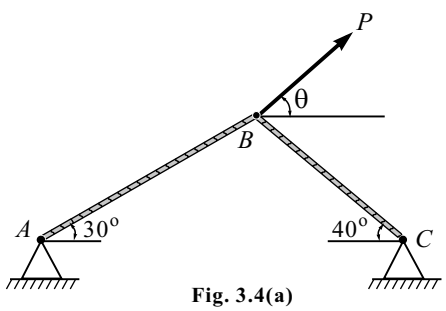

Fig. 3.4(a)

Solution

(i) Consider the F.B.D. of point *B*.

(ii) $\Sigma F_y = 0$

$P \sin\theta - 3000 \sin 30^\circ - 3000 \sin 40^\circ = 0$

$P \sin\theta = 3428.36 \quad \text{...(I)}$

(iii) $\Sigma F_x = 0$

$P \cos\theta + 3000 \cos 40^\circ - 3000 \cos 30^\circ = 0$

$P \cos\theta = 299.94 \quad \text{...(II)}$

Dividing Eq. (I) by Eq. (II), we get

$\theta = 85^\circ$

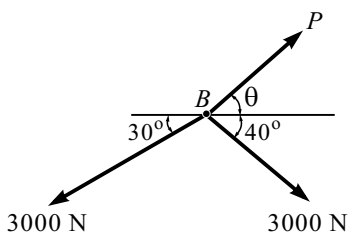

Fig. 3.4(b)

(iv) From Eq. (I), we get

$$P = \frac{3428.36}{\sin 85^\circ}$$

$P = 3441.46 \text{ N} \quad (\measuredangle 85^\circ)$

Problem 5

A frame ABC is pin joint at B and external 1000 N force is applied horizontally as shown in Fig. 3.5(a). Determine the force exerted in bar AB and BC.

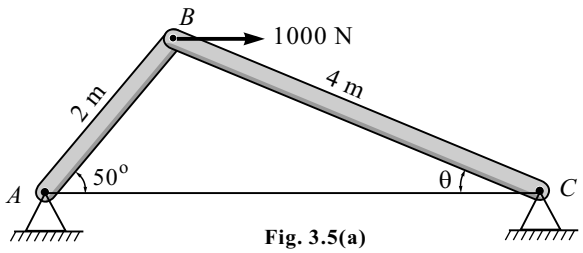

Fig. 3.5(a)

Solution

(i) By sine rule in ΔABC, we have

$$\frac{2}{\sin \theta^o} = \frac{4}{\sin 50^o} \quad \therefore \theta = 22.52^o$$

(ii) Consider the F.B.D. of joint B.

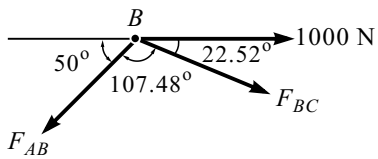

Fig. 3.5(b) : F.B.D. of B

(iii) By Lami's theorem, we have

$$\frac{1000}{\sin 107.48^o} = \frac{F_{AB}}{\sin 22.52^o} = \frac{F_{BC}}{\sin 230^o}$$

$F_{AB} = 401.55$ N (Tension)

$F_{BC} = -803.13$ N (–ve sign indicates wrong assumed direction)

$F_{BC} = 803.13$ N (compression)

Problem 6

A circular roller of 1000 N weight and 20 cm radius hangs by a tie rod AB = 40 cm and rests against a smooth vertical wall at C as shown in Fig. 3.6(a). Determine the tension in the rod and reaction at point C.

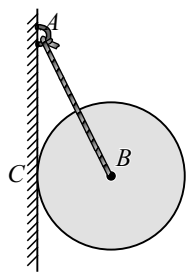

Fig. 3.6(a)

Solution

(i) Draw the F.B.D. of the roller

$$\cos \theta = \frac{20}{40}$$

$\therefore \theta = 60^o$

(ii) By Lami's theorem, we have

$$\frac{1000}{\sin 120^o} = \frac{T_{AB}}{\sin 90^o} = \frac{R_C}{\sin 150^o}$$

$\therefore T_{AB} = 1154.7$ N $(60^o \nwarrow)$

$\therefore R_C = 577.35$ N $(\rightarrow)$

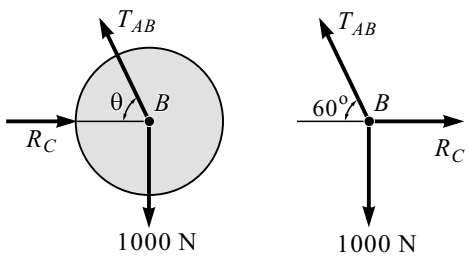

Fig. 3.6(b)

Problem 7

A roller of weight W = 1000 N rests on a smooth inclined plane. It is kept from rolling down the plane by string AC as shown in Fig. 3.7(a). Find the tension in the string and reaction at the point of contact D.

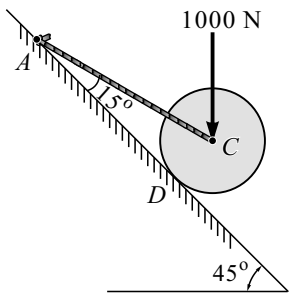

Fig. 3.7(a)

Solution

(i) Draw the F.B.D. of the roller.

(ii) By Lami's theorem,

$$\frac{1000}{\sin 75^\circ} = \frac{R_D}{\sin 60^\circ} = \frac{-T_{AC}}{\sin 225^\circ}$$

$\therefore R_D = 896.58$ N $(\measuredangle 45^\circ)$

$\therefore T_{AC} = 732$ N

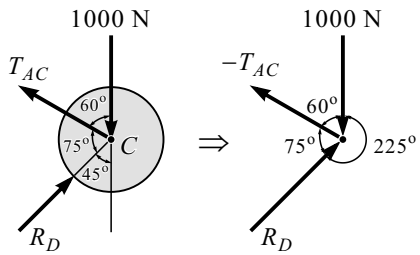

Fig. 3.7(b)

Problem 8

A cylinder of 50 kg mass is resting on a smooth surface which are inclined at 30° and 60° to horizontal as shown in Fig. 3.8(a). Determine the reaction at contact A and B.

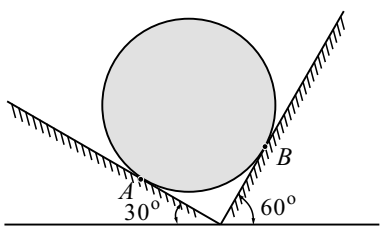

Fig. 3.8(a)

Solution

(i) Consider the F.B.D. of the cylinder.

(ii) By Lami's theorem, we have

$$\frac{50 \times 9.81}{\sin 90^\circ} = \frac{R_A}{\sin 120^\circ} = \frac{R_B}{\sin 150^\circ}$$

$R_A = 424.79$ N

$R_B = 245.25$ N

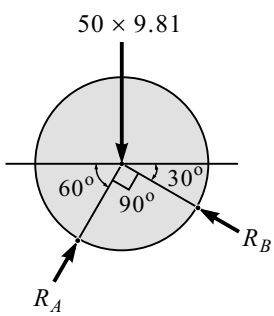

Fig. 3.8(b) : F.B.D. of Cylinder

Problem 9

Determine the horizontal distance x of which a 5 m long inextensible string holding a roller of weight 3 kN can be pulled before the string breaks. The string can withstand a maximum force of 6 kN as shown in Fig. 3.9(a). Determine also the required force F.

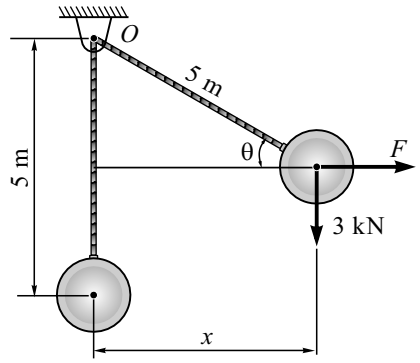

Fig. 3.9(b)

Solution

(i) Consider the F.B.D. of the roller shown in Fig. 3.9(b).

(ii) By Lami's theorem,

$$\frac{3}{\sin(180^o - \theta)} = \frac{6}{\sin 90^o} = \frac{F}{\sin(90^o + \theta)}$$

$$\frac{3 \times \sin 90^o}{6} = \sin(180^o - \theta)$$

$$0.5 = \sin(180^o - \theta) \quad \therefore \theta = 30^o$$

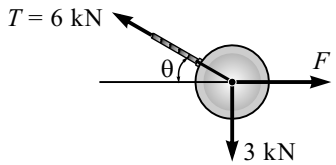

Fig. 3.9(b) : F.B.D. of Roller

(iii) $$\frac{F}{\sin(90 + \theta)} = \frac{6}{\sin 90^o}$$

$$F = \frac{6 \sin 120^o}{\sin 90^o} \quad \therefore F = 5.196 \text{ kN}$$

$$x = 5 \cos 30^o \quad \therefore x = 4.33 \text{ m}$$

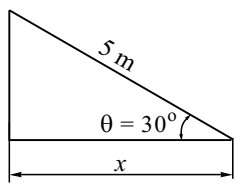

Fig. 3.9(c)

Problem 10

The 30 kg collar may slide on frictionless vertical rod and is connected to a 34 kg counterweight. Find the value of h for which the system is in equilibrium.

Refer to Fig. 3.10(a) for details.

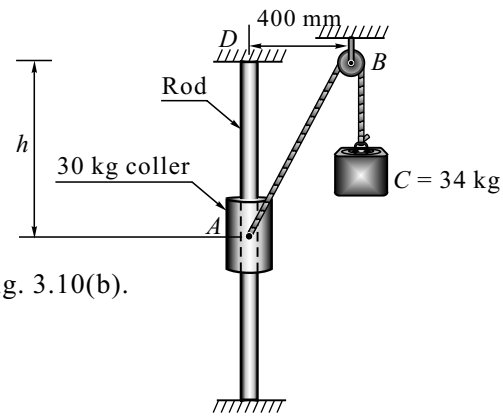

Fig. 3.10(a)

Solution

(i) Consider the F.B.D. of the collar shown in Fig. 3.10(b).

(ii) By Lami's theorem,

$$\frac{T}{\sin 90^o} = \frac{30 \times 9.81}{\sin(180^o - \theta)}$$

$$\sin\theta = \frac{30 \times 9.81}{34 \times 9.81} \times \sin 90^o$$

$$\therefore \theta = 61.93^o$$

(iii) Refer to Fig. 3.10(c).

$$\tan 61.93^o = \frac{h}{400}$$

$$h = 750 \text{ mm}$$

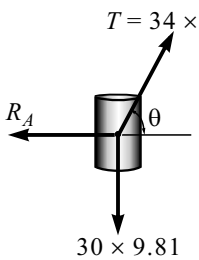

Fig. 3.10(b) : F.B.D. of Collar

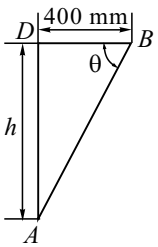

Fig. 3.10(c)

Problem 11

Determine the force P applied at 30° to the horizontal just necessary to start a roller having 50 cm radius over a 12 cm high obstruction, if the roller is of 100 kg mass, shown in Fig. 3.11(a). Also find the magnitude and direction of P when it is minimum.

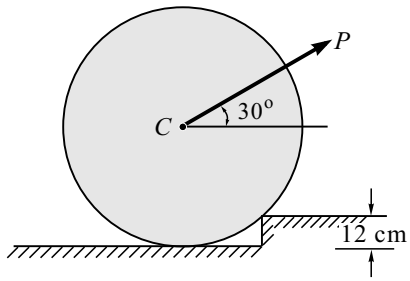

Fig. 3.11(a)

Solution

(i) Consider the F.B.D. of the roller.

As per the given condition, P is just sufficient to start the roller. At this instant, the roller will not have any pressure on the horizontal surface. Therefore, the surface will not offer any reaction. We can identify this body is subjected to three forces viz. 100×9.81, P and R. Since $100 \times 9.81$and P are passing through C therefore the third force, i.e., the reaction R must also pass through the same point C as per three force principle.

Let us draw concurrent forces for simplicity, refer to Fig. 3.11(b).

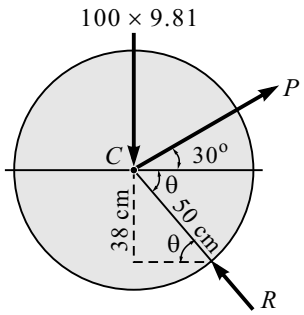

Fig. 3.11(b) : F.B.D. of Roller

$$\sin\theta = \frac{38}{50} \quad \therefore \theta = 49.46^o$$

(ii) Before applying Lami's theorem, we should overcome its limitation, i.e., nature of three forces must be same. Here P is directed away from point C. Since we know that force is a vector quantity, by placing negative sign we can satisfy the Lami's theorem requirement. Now nature of three forces is pushing towards point C.

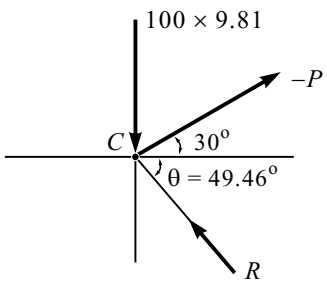

Fig. 3.11(c)

(iii) By Lami's theorem,

$$\frac{981}{\sin 79.46^o} = \frac{-P}{\sin 220.54^o}$$

$$P = \frac{-981 \times \sin 220.54^o}{\sin 79.46^o}$$

$$\therefore P = 648.57 \text{ N}$$

(iv) **Method I :** To find P_{min}

By Lami's theorem,

$$\frac{-P_{min}}{\sin 220.54^o} = \frac{981}{\sin(\alpha + 49.46^o)}$$

$$P_{min} = \frac{-981 \times \sin 220.54^o}{\sin(\alpha + 49.46^o)} \quad \text{... (I)}$$

For P_{min} the denominator should be maximum, i.e.,

$$\sin(\alpha + 49.46^o) = 1$$

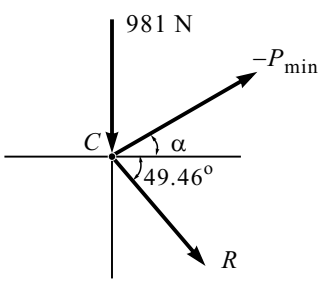

Fig. 3.11(d)

$\therefore\ \alpha + 49.46 = 90 \qquad \therefore\ \alpha = 40.54^o$

From Eq. (I)

$$P_{min} = \frac{-981 \times \sin 220.54^o}{\sin (40.54^o + 49.46^o)}$$

$\therefore\ P_{min} = 637.63$ N $(\angle\alpha)$

(iv) Method II : To find P_{min}

To start the roller over the obstruction, P should balance the anticlockwise moment of W about point A with an equal clockwise moment.

The maximum distance between the point A and line of action of P is AC. Therefore, to create a given moment about A, the force P will be minimum when it acts at right angle to AC as shown in Fig. 3.11(e). Then the P_{min} will make an angle $\alpha = 40.54^o$.

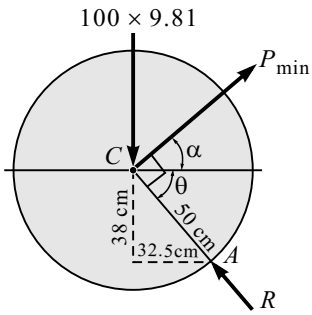

Fig. 3.11(e) : F.B.D. of Roller

$\alpha + \theta = 90^o$; $\alpha + 49.49^o = 90^o \therefore\ \alpha = 40.54^o$

$\Sigma M_A = 0$

$100 \times 9.81 \times 32.5 - P_{min} \times 50 = 0$

$\therefore\ P_{min} = 637.63$ N $(\angle\alpha)$

Problem 12

Two identical rollers each of mass 50 kg are supported by an inclined plane and a vertical wall as shown in Fig. 3.12(a). Assuming smooth surfaces, find the reactions induced at the point of support A, B and C.

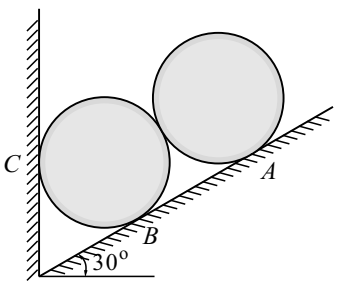

Fig. 3.12(a)

Solution

(i) Consider F.B.D. of both rollers together and let R be the radius of rollers.

(ii) $\Sigma M_O = 0$

$R_A \times 2R - 50 \times 9.81 \cos 30^o \times 2R = 0$

$R_A = 424.79$ N $(60^o\angle)$

(iii) $\Sigma F_y = 0$

$R_B \cos 30^o + R_A \cos 30^o - 50 \times 9.81 - 50 \times 9.81 = 0$

$R_B = 707.97$ N $(60^o\angle)$

(iv) $\Sigma F_x = 0$

$R_C - R_A \sin 30^o - R_B \sin 30^o = 0$

$R_C = 424.79 \sin 30^o + 707.97 \sin 30^o$

$R_C = 566.38$ N $(\rightarrow)$

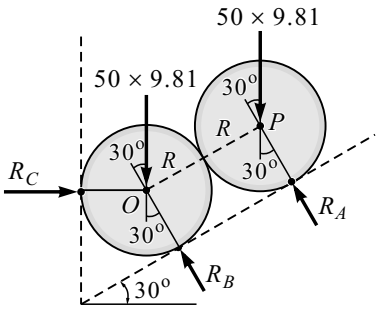

Fig. 3.12(b)

Problem 13

A uniform wheel of 60 cm diameter and weighing 1000 N rests against a 15 cm high rectangular block lying on a horizontal plane as shown in Fig. 3.13(a). It is to be pulled over the block by a horizontal force P applied to the end of a string wound round the circumference of the wheel. Find the force P when the wheel is just about to roll over the block.

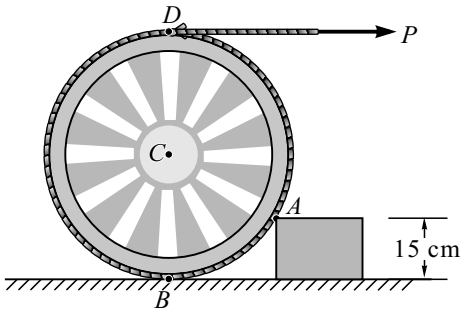

Fig. 3.13(a)

Solution

Since the wheel is just about to roll over the rectangular block the reaction at contact B will become zero. The wheel is subjected to two active forces, i.e., 1000 N self-weight and horizontal applied force P and one reactive force due to knife edge support by rectangular block. Therefore, by three force principle, all three forces must be concurrent and should pass through point D.

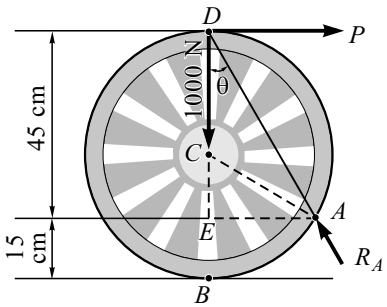

Fig. 3.13(b)

(i) Draw the F.B.D. of wheel corresponding to above discussion. Refer to Fig. 3.13(b).

In $\Delta\, ACE$

$$AE = \sqrt{AC^2 - CE^2} = \sqrt{30^2 - 15^2}$$

$$AE = 25.98 \text{ cm}$$

$$\therefore \tan\theta = \frac{AE}{DE} = \frac{25.98}{45} \quad \therefore \theta = 30^o$$

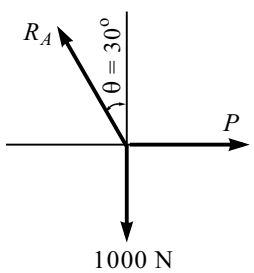

Fig. 3.13(c)

(ii) By Lami's theorem, we have

$$\frac{1000}{\sin 120^o} = \frac{P}{\sin 150^o}$$

$$\therefore P = 577.35 \text{ N}$$

Problem 14

Two cylinders each of 100 mm diameter and each weighing 200 N are placed as shown in Fig. 3.14(a). Assuming that all the contact surfaces are smooth, find the reactions at A, B and C.

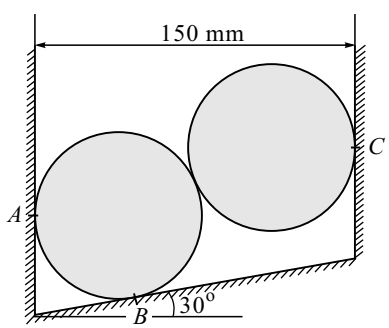

Fig. 3.14(a)

Solution

Note : Assuming the base line inclined at 30° to horizontal.

(i) Consider the F.B.D. of both the rollers together as shown in Fig. 3.14(b).

(ii) From the F.B.D. of lower cylinder.

$\Sigma F_y = 0$

$R_B \cos 30^\circ - 200 - R \sin 60^\circ = 0$

$R_B = 461.89$ N $(60^\circ \nwarrow)$

$\Sigma F_x = 0$

$R_A - R \cos 60^\circ - R_B \sin 30^\circ = 0$

$R_A = 346.42$ N $(\rightarrow)$

(iii) From the F.B.D. of upper cylinder.

By Lami's theorem,

$$\frac{200}{\sin 120^\circ} = \frac{R_C}{\sin 150^\circ} = \frac{R}{\sin 90^\circ}$$

$R_C = 115.47$ N $(\leftarrow)$

$R = 230.94$ N $(\nearrow 60^\circ)$

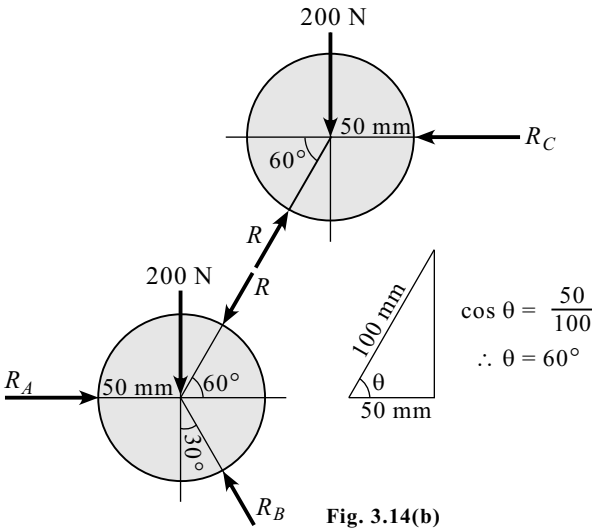

Fig. 3.14(b)

Problem 15

Two spheres A and B are resting in a smooth through as shown in Fig. 3.15(a). Draw the free body diagrams of A and B showing all the forces acting on them, both in magnitude and direction. Radii of spheres A and B are 250 mm and 200 mm, respectively.

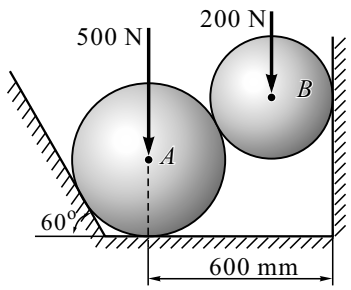

Fig. 3.15(a)

Solution

(i) From Fig. 3.15(b). $AB = 450$ mm and $AC = 400$ mm

$$\cos\theta = \frac{AC}{AB} = \frac{400}{450} \qquad \therefore \theta = 27.27^\circ$$

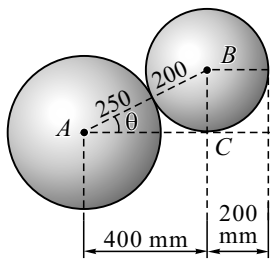

Fig. 3.15(b)

(ii) Consider the F.B.D. of sphere B [Fig. 3.15(c)]

By Lami's theorem,

$$\frac{200}{\sin 152.73^\circ} = \frac{R_1}{\sin 117.27^\circ} = \frac{R_2}{\sin 90^\circ}$$

$\therefore R_1 = 388$ N $(\leftarrow)$ and

$R_2 = 436.51$ N $(\nearrow 27.27^\circ)$

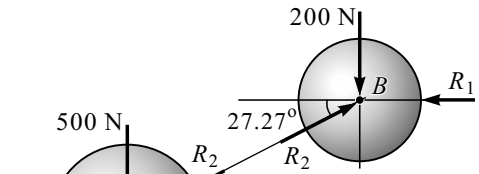

Fig. 3.15(c)

(iii) Consider the F.B.D. of sphere A [Fig. 3.15(d)]

$\Sigma F_x = 0$

$R_4 \cos 30^\circ - 436.51 \cos 27.27^\circ = 0$

$R_4 = 448$ N $(\nearrow 30^\circ)$

$\Sigma F_y = 0$

$-500 + R_3 - 436.51 \sin 27.27^\circ + 448 \sin 30^\circ = 0$

$R_3 = 476$ N $(\uparrow)$

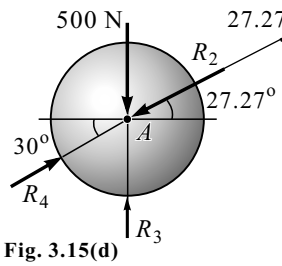

Fig. 3.15(d)

Problem 16

Two spheres A and B of 1000 N and 750 N weight, respectively are kept as shown in the Fig. 3.16(a). Determine the reactions at all contact points 1, 2, 3 and 4. Radius of A = 400 mm and Radius of B = 300 mm.

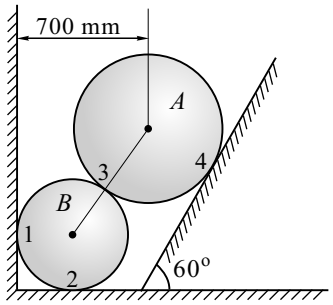

Fig. 3.16(a)

Solution

(i) Consider the F.B.D. of sphere A [Fig. 3.16(b)]

By Lami's theorem, we have

$$\frac{1000}{\sin(180 - 30 - 55.15)^\circ} = \frac{R_3}{\sin(90 + 30)^\circ} = \frac{R_4}{\sin(90 + 55.15)^\circ}$$

$R_3 = 869.14$ N $(\angle 55.15^\circ)$

$R_4 = 573.48$ N $(30^\circ \angle)$

(ii) Consider the F.B.D. of sphere B

$\Sigma F_x = 0$

$R_1 - R_3 \cos 55.15^\circ = 0$

$R_1 = 496.65$ N $(\rightarrow)$

$\Sigma F_y = 0$

$R_2 - 750 - R_3 \sin 55.15^\circ = 0$

$R_2 = 1463.26$ N $(\uparrow)$

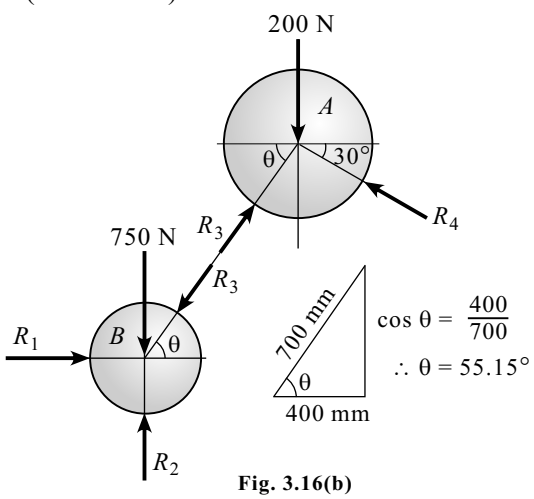

Fig. 3.16(b)

Problem 17

A right-circular cylinder of 40 cm diameter, open at both ends, rests on a smooth horizontal plane. Inside the cylinder, there are two sphere having weights and radii as given. Find the minimum weight of the cylinder for which it will not tip over.

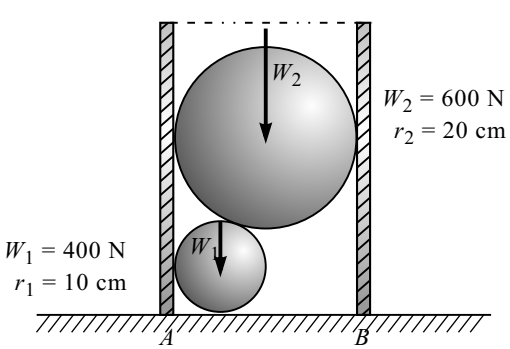

Fig. 3.17(a)

Solution

(i) Consider the F.B.D. of both the spheres together

Let P and Q be the centre points of the spheres.

$PQ = 30$ cm

$30^2 = 10^2 + h^2$

$h = 28.28$ cm

$\Sigma M_P = 0$

$R_2 \times h - W_2 \times 10 = 0$

$R_2 = \dfrac{600 \times 10}{28.28}$

$\therefore R_2 = 212.16 \text{ N } (\leftarrow)$

$\Sigma F_x = 0$

$R_1 - R_2 = 0$

$\therefore R_1 = 212.16 \text{ N } (\rightarrow)$

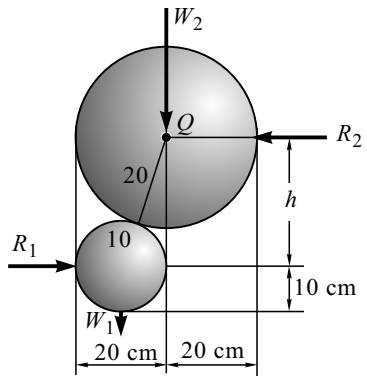

Fig. 3.17(b) : F.B.D. of Both the Spheres Together

(ii) Consider the F.B.D. of the cylinder

If the weight of the cylinder is negligible, the cylinder will tip about point B.

So, to avoid tipping W_{minimum} is required.

$\Sigma M_B = 0$

$W \times 20 + 212.16 \times 10 - 212.16 \times 38.28 = 0$

$W = 300 \text{ N } (\downarrow)$

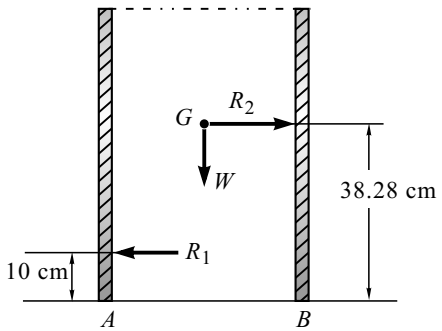

Fig. 3.17(c) : F.B.D. of Cylinder

Problem 18

Determine the reactions at points of contact 1, 2 and 3. Assume smooth surfaces.

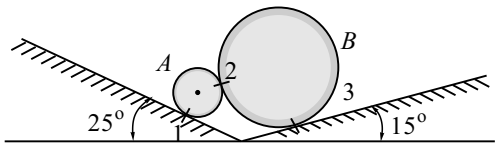

$W_A = 1$ kg $r_A = 1$ cm,

$W_B = 4$ kg $r_B = 4$ cm.

Fig. 3.18(a)

Solution

(i) Consider the F.B.D. of both the cylinders together

$\Sigma F_x = 0$

$R_1 \cos 65^\circ - R_3 \cos 75^\circ = 0$

$\therefore R_1 = 0.6124\, R_3$

$\Sigma F_y = 0$

$R_1 \sin 65^\circ + R_3 \sin 75^\circ + 1 \times 9.81 + 4 \times 9.81 = 0$

$0.6124\, R_3 \sin 65^\circ + R_3 \sin 75^\circ + 5 \times 9.81 = 0$

$R_3 = 32.216 \text{ N } (\measuredangle 75^\circ)$ and $R_1 = 19.729 \text{ N } (\measuredangle 65^\circ)$

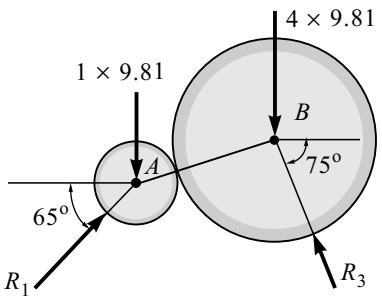

Fig. 3.18(b) : F.B.D. of A and B Together as a Single Body

(ii) Consider the F.B.D. of 1 kg cylinder A

$\Sigma F_y = 0$

$19.729 \sin 65^\circ - 1 \times 9.81 - R_2 \sin \alpha = 0$

$R_2 \sin \alpha = 8.071$ .....(I)

$\Sigma F_x = 0$

$19.729 \cos 65^o - R_2 \cos \alpha = 0$

$R_2 \cos \alpha = 8.338$ .....(II)

Dividing Eq.(I) by Eq. (II), we get

$\alpha = 44.07^o$

From Eq. (I), we get

$R_2 = 11.604$ N $(\measuredangle 44.07^o)$

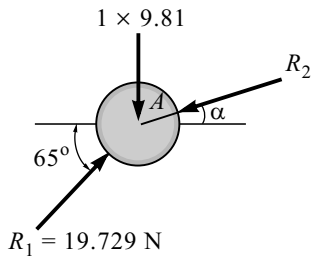

Fig. 3.18(c) : F.B.D. of *A*

Problem 19

Three identical tubes of 8 kN weights each are placed as shown in Fig. 3.19(a). Determine the forces exerted by the tubes on the smooth walls and floor.

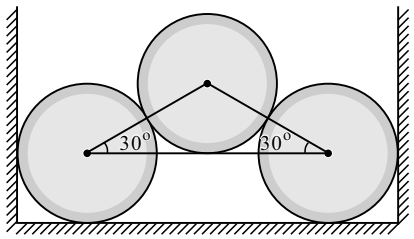

Fig. 3.19(a)

Solution

(i) Consider the F.B.D. of upper tube shown in Fig. 3.19(b). Since tubes are identical and placed symmetrically, reactions R at contact will be same.

(ii) By Lami's theorem,

$$\frac{8}{\sin 120^o} = \frac{R}{\sin 120^o} \quad \therefore R = 8 \text{ kN}$$

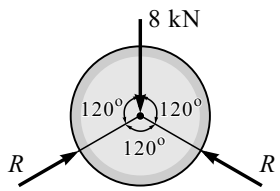

Fig. 3.19(b)

(iii) Consider the F.B.D. of any lower tube (say left) Fig. 3.19(c).

(iv) By Lami's theorem,

$$\frac{8}{\sin 90^o} = \frac{R_W}{\sin 120^o} = \frac{R_F}{\sin 150^o}$$

(v) $R_W = 6.928$ kN (Force exerted by the tubes on the smooth wall)

$R_F = 4$ kN (Force exerted by the tubes on the smooth floor)

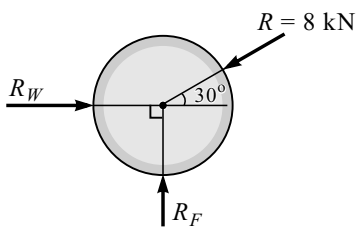

Fig. 3.19(c)

Problem 20

Two smooth circular cylinders of weight W = 500 N each and radius r = 150 mm are connected at their centre by a string of length l = 400 mm and rest upon a horizontal plane supporting above them a third cylinder of 1000 N weight and radius r = 150 mm as shown in Fig. 3.20(a). Find the tension in the string and pressure at the point of contact D and E.

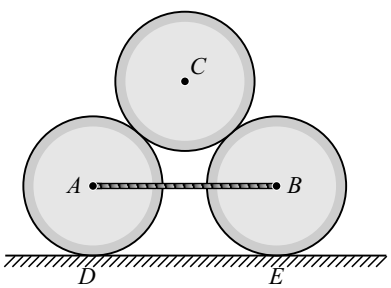

Fig. 3.20(a)

Solution

(i) Consider the $\Delta\ ABC$ and simplify its geometric length and angle as shown in Fig. 3.20(b).

$$\cos\theta = \frac{200}{300} \qquad \therefore\ \theta = 48.19^{\circ}$$

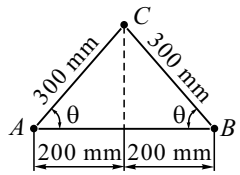

Fig. 3.20(b)

(ii) Draw the F.B.D. of the upper cylinder C [Fig. 3.20(c)].

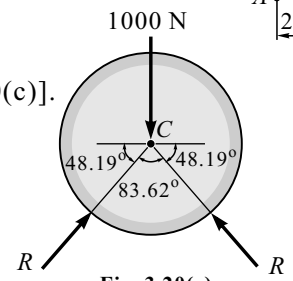

Fig. 3.20(c)

(iii) By Lami's theorem,

$$\frac{1000}{\sin 83.62^{\circ}} = \frac{R}{\sin 138.19^{\circ}}$$

$$\therefore\ R = 670.82 \text{ N}$$

(iv) Draw the F.B.D. of the lower cylinder A as shown in Fig. 3.20(d).

$\Sigma F_x = 0$

$T - 670.82 \cos 48.19^{\circ} = 0$

$T = 447.21$ N

$\Sigma F_y = 0$

$R_D - 500 - 670.82 \sin 48.19^{\circ} = 0$

$R_D = 1000$ N

$R_D = R_E = 1000$ N (Since the loading is symmetric, therefore, reaction will be equal.)

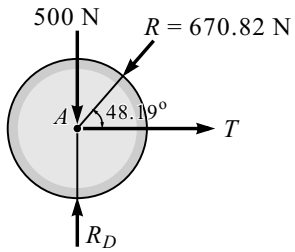

Fig. 3.20(d)

Problem 21

Three cylinders are piled up in a rectangular channel as shown in Fig. 3.21(a). Determine the reactions at point 6 between the cylinder A and the vertical wall of the channel.

(Cylinder A : radius = 4 cm, m = 15 kg,
Cylinder B : radius = 6 cm, m = 40 kg,
Cylinder C : radius = 5 cm, m = 20 kg).

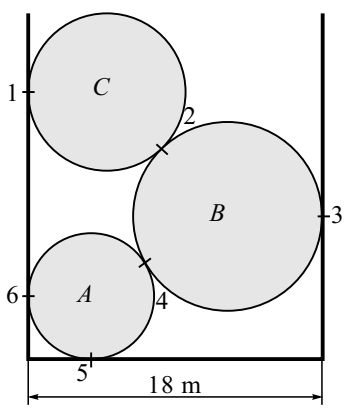

Fig. 3.21(a)

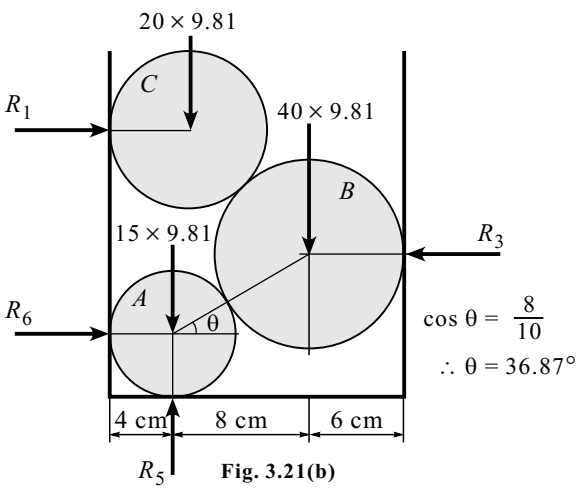

Fig. 3.21(b)

Solution

(i) Consider F.B.D. of entire system as shown in Fig. 3.21(b).

$\Sigma F_y = 0$

$R_5 - 20 \times 9.81 - 40 \times 9.81 - 15 \times 9.81 = 0$

$R_5 = 735.75$ N

(ii) Consider the F.B.D. of cylinder A [Refer to Fig. 3.21(c)].

$\Sigma F_y = 0$

$735.75 - 15 \times 9.81 - R_4 \sin 36.87^o = 0$

$R_4 = 981$ N

$\Sigma F_x = 0$

$R_6 - R_4 \cos 36.87^o = 0$

$R_6 = 784.8$ N $(\rightarrow)$

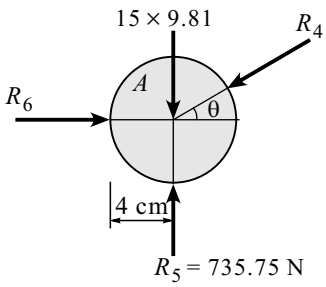

Fig. 3.21(c)

Problem 22

Three identical spheres P, Q, R of weight W are arranged on smooth inclined surface as shown in Fig. 3.22(a). Determine the angle a which will prevent the arrangement from collapsing.

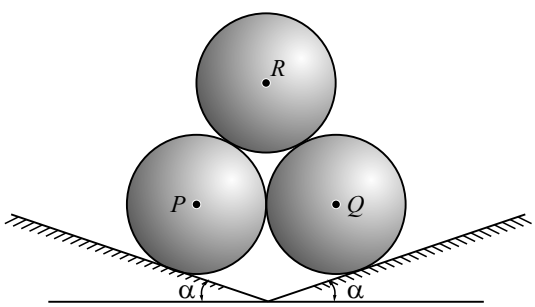

Fig. 3.22(a)

Solution

(i) Consider the F.B.D. of upper sphere R.

Since spheres are identical therefore due to symmetry, reaction at contact point will be same R.

Δ PQR is forming equilateral triangle. Thus, included angle between reactions R is 60°.

By Lami's theorem,

$$\frac{W}{\sin 60^o} = \frac{R}{\sin 150^o} \quad \therefore R = 0.577\, W$$

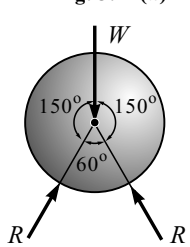

Fig. 3.22(b) : F.B.D. of Sphere *R*

(ii) Consider the F.B.D. of any one lower sphere (say P)

The reaction at contact between two lower spheres will be zero because at the required angle α the arrangement is about to collapse.

$\therefore R_2 = 0$

$\Sigma F_x = 0$

$R_1 \sin \alpha = 0.577\, W \cos 60^o$ .....(I)

$\Sigma F_y = 0$

$R_1 \cos \alpha = W + 0.577\, W \sin 60^o$

Dividing Eq. (I) by Eq. (II),

$$\tan \alpha = \frac{0.577\, W \cos 60^o}{W + 0.577\, W \sin 60^o} \quad \therefore \alpha = 10.89^o$$

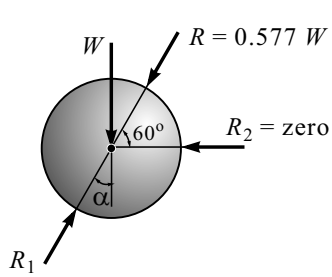

Fig. 3.22(c) : F.B.D. of Sphere *P*

Problem 23

A mass raises a 10 kg joist of 4 m length by pulling on a rope. Find the tension in the rope and reaction at A. Refer Fig. 3.23(a).

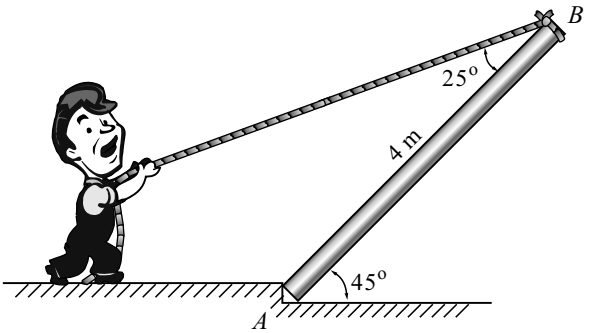

Fig. 3.23(a)

Solution

Method I

(i) Consider the F.B.D. of the joist.

By three-force principle in equilibrium R_A, T and 10×9.81 N must pass through a common point say D.

In $\Delta\, BCD$, by sine rule

$$\frac{CD}{\sin 25^\circ} = \frac{2}{\sin 110^\circ}$$

$$CD = 0.9 \text{ m}$$

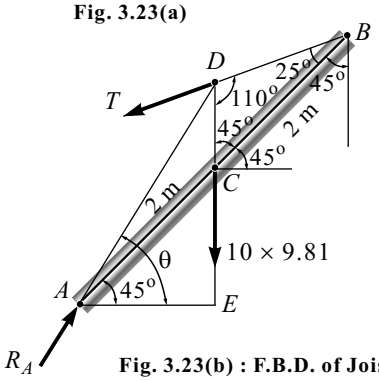

Fig. 3.23(b) : F.B.D. of Joist

(ii) In $\Delta\, AEC$,

$$AE = CE = \sqrt{2}$$

$$\tan\theta = \frac{DE}{AE} = \frac{CD + CE}{AE}$$

$$\tan\theta = \frac{0.9 + \sqrt{2}}{\sqrt{2}} \qquad \therefore\ \theta = 58.57^\circ$$

(iii) Consider three concurrent forces at point D.

By Lami's theorem, we have

$$\frac{98.1}{\sin 141.43^\circ} = \frac{T}{\sin 148.57^\circ} = \frac{R_A}{\sin 70^\circ}$$

$$T = 82.05 \text{ N}$$

$$R_A = 147.86 \text{ N} \quad \left(\measuredangle\theta = 58.57^\circ\right)$$

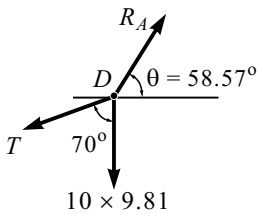

Fig. 3.23(c)

Method II

(i) $\Sigma M_A = 0$

$$T \sin 25^\circ \times 4 - 10 \times 9.81 \times 2 \cos 45^\circ = 0 \ \therefore\ T = 82.07 \text{ N}$$

(ii) $\Sigma F_x = 0$

$$H_A - T \cos 20^\circ = 0 \ \therefore\ H_A = 77.12 \text{ N}$$

(iii) $\Sigma F_y = 0$

$$V_A - 10 \times 9.81 - T \sin 20^\circ = 0 \ \therefore\ V_A = 126.17 \text{ N}$$

(iv) $\tan\theta = \dfrac{V_A}{H_A} = \dfrac{126.17}{77.12} \quad \therefore\ \theta = 58.57^\circ$

(v) $R_A = \sqrt{H_A^2 + V_A^2} = \sqrt{77.12^2 + 126.17^2}$

$$R_A = 147.87 \text{ N} \quad \left(\measuredangle\theta = 58.57\right)$$

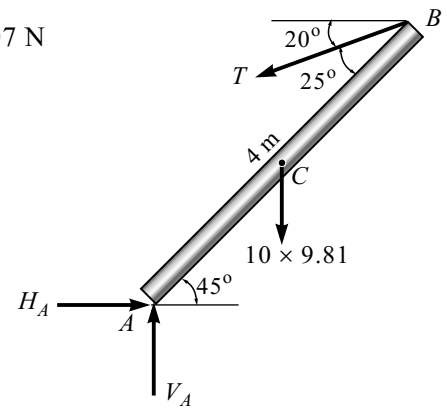

Fig. 3.23(d) : F.B.D. of Joist

Problem 24

A lever AB is hinged at C and attached to a control cable at A as shown in Fig. 3.24(a). If the lever is subjected to a 75 N vertical force at B, determine the tension in the cable and reaction at C.

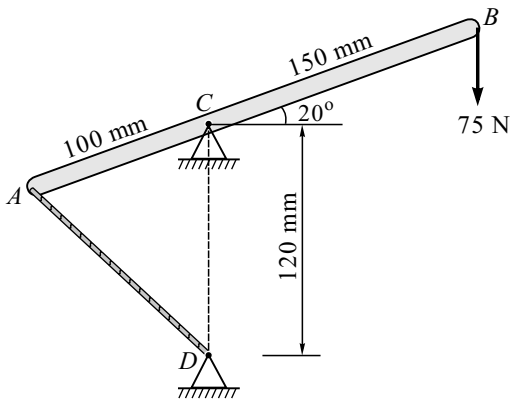

Fig. 3.24(a)

Solution

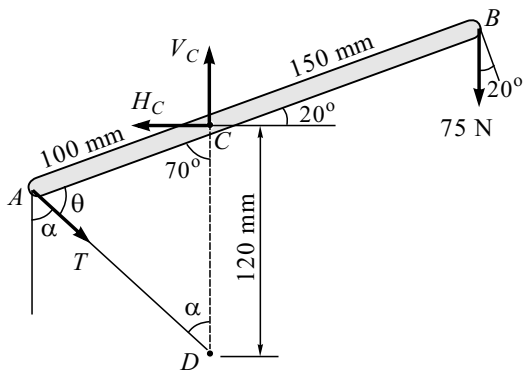

Fig. 3.24(b)

(i) Consider the F.B.D. of Lever AB in Fig. 3.24(b).

(ii) In ΔACD, by cosine rule,

$$AD = \sqrt{100^2 + 120^2 - 2 \times 100 \times 120 \cos 70^\circ}$$

$$AD = 127.25 \text{ mm}$$

By sine rule,

$$\frac{127.25}{\sin 70^\circ} = \frac{120}{\sin \theta} \qquad \therefore \ \theta = 62.39^\circ$$

$$\alpha = 180 - 70 - \theta \qquad \therefore \ \alpha = 47.61^\circ$$

(iii) $\Sigma M_C = 0$

$$T \sin 62.39^\circ \times 100 - 75 \cos 20^\circ \times 150 = 0$$

$$T = 119.3 \text{ N}$$

(iv) $\Sigma F_x = 0$

$$-H_C + 119.3 \sin 47.61^\circ = 0$$

$$H_C = 88.11 \text{ N } (\leftarrow)$$

(v) $\Sigma F_y = 0$

$$V_C - 75 - 119.3 \cos 47.61^\circ = 0$$

$$V_C = 155.43 \text{ N } (\uparrow)$$

Problem 25

Find the distance x, measured along AB at which a horizontal force of 600 N should be applied to hold the uniform bar AB in the position as shown in Fig. 3.25(a). AB weights 1400 N and measures 1000 mm. The incline and the floor are smooth.

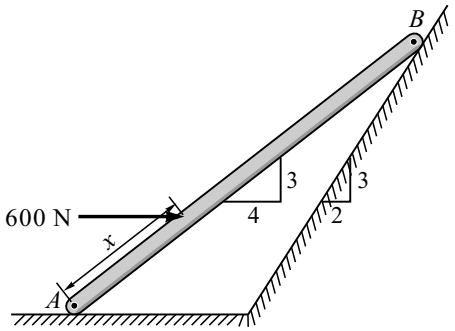

Fig. 3.25(a)

Solution

(i) Consider the F.B.D. of rod AB [Fig. 3.25(b)].

From the geometry,

$\tan\theta = \frac{2}{3}$ $\quad\therefore\ \theta = 33.69^o$

$\tan\beta = \frac{3}{4}$ $\quad\therefore\ \beta = 36.87^o$

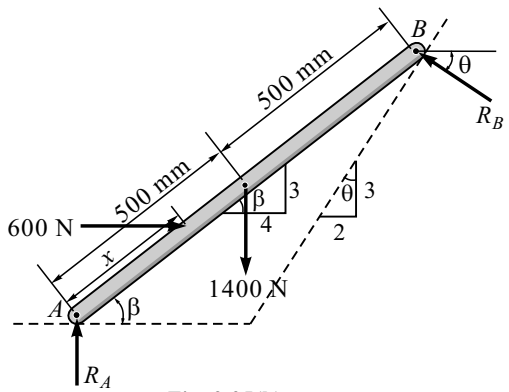

Fig. 3.25(b)

(ii) $\Sigma F_x = 0$

$600 - R_B \cos 33.69^o = 0 \quad \therefore R_B = 721.11$ N

(iii) $\Sigma M_A = 0$

$-600 \times x \sin 36.87^o - 1400 \times 500 \times \cos 36.87^o + 721.11 \cos 33.69^o \times 1000 \sin 36.87^o + 721.11 \sin 33.69^o \times 1000 \cos 36.87^o = 0$

$\therefore\ x = 333.33$ mm

Problem 26

Neglecting the friction and the radius of the pulley shown in Fig. 3.26(a), determine the tension in the cable ADB and reaction at C.

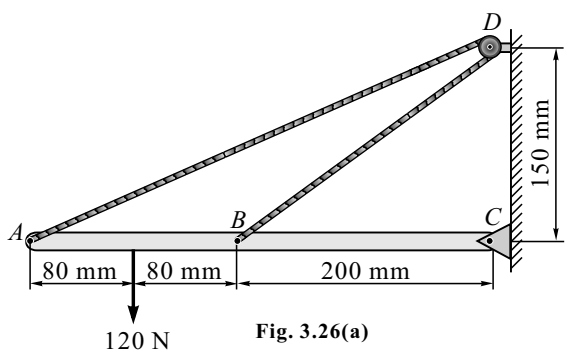

Fig. 3.26(a)

Solution

(i) Consider the F.B.D. of Bar AC in Fig. 3.26(b).

(ii) $\Sigma M_C = 0$

$120 \times 280 - T \sin 22.62^o \times 360 - T \sin 36.87^o \times 200 = 0$

$T = 130$ N

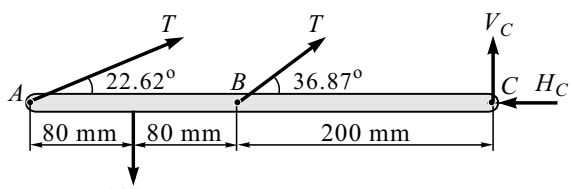

Fig. 3.26(b)

(iii) $\Sigma F_x = 0$

$T \cos 22.62^o + T \cos 36.87^o - H_C = 0$

$H_C = 224$ N $(\leftarrow)$

(iv) $\Sigma F_y = 0$

$T \sin 22.62^o + T \sin 36.87^o + V_C - 120 = 0$

$V_C = -8$ N (Wrong assumed direction)

$V_C = 8$ N $(\downarrow)$

Problem 27

A uniform beam AB hinged at A is kept horizontal by supporting and setting a 50 kN weight with the help of a string tied at B and passing over a smooth peg at C, as shown in Fig. 3.27(a). The beam weight is 25 kN. Find the reaction at A and C.

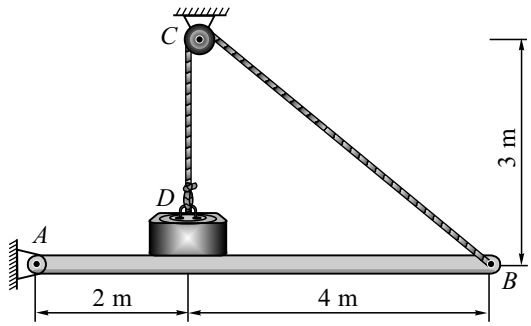

Fig. 3.27(a)

Solution

(i) Consider the F.B.D. of block D. [Fig. 3.27(b)]

$\Sigma F_y = 0$

$R + T - 50 = 0$

$\therefore R = 50 - T$

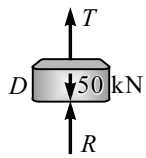

Fig. 3.27(b)

(ii) Consider the F.B.D. of beam AB. [Fig. 3.27(c)]

$\Sigma M_A = 0$

$-(50 - T)2 - 25 \times 3 + T \sin 36.87^\circ \times 6 = 0$

$\therefore T = 31.25$ kN

$\Sigma F_x = 0$

$H_A - 31.25 \cos 36.87^\circ = 0$

$\therefore H_A = 25$ kN $(\rightarrow)$

$\Sigma F_y = 0$

$V_A - (50 - T) - 25 + T \sin 36.87^\circ = 0$

$\therefore V_A = 25$ kN $(\uparrow)$

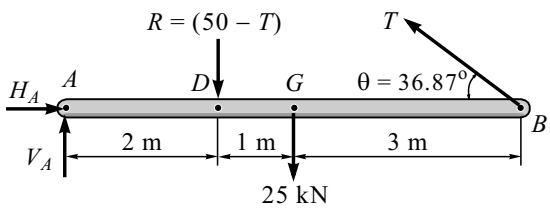

Fig. 3.27(c)

(iii) Consider the F.B.D. of peg C. [Fig. 3.27(d)]

$\Sigma F_x = 0$

$31.25 \cos 36.87^\circ - H_C = 0$

$\therefore H_C = 25$ kN $(\leftarrow)$

$\Sigma F_y = 0$

$V_C - 31.25 - 31.25 \sin 36.87^\circ = 0$

$\therefore V_C = 50$ kN $(\uparrow)$

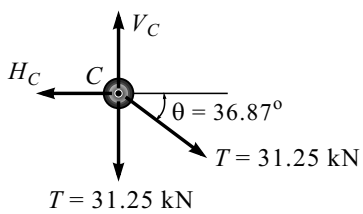

Fig. 3.27(d)

Problem 28

Two cylinders, having weight W_A = 2000 N and W_B = 1000 N are resting on smooth inclined planes having inclination 60° and 45° with the horizontal respectively as shown in Fig. 3.28(a). They are connected by a weightless bar AB with hinge connections. The bar AB makes 15° angle with the horizontal. Find the magnitude of the force P required to hold the system in equilibrium.

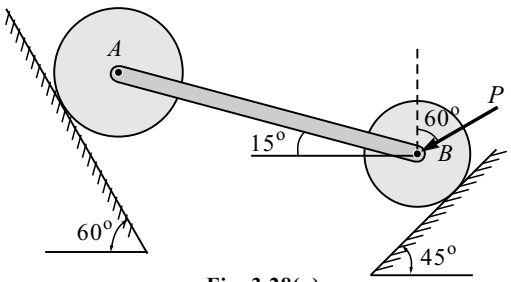

Fig. 3.28(a)

Solution

(i) In a given system of rigid bodies (two cylinders and one bar), the bar AB is connected at its extreme ends by frictionless pin. So, we can identify bar AB is a two-force member which can be indicated by F_{AB}.

(ii) Consider the F.B.D. of cylinder W_A = 2000 [Fig. 3.28(b)].

By Lami's theorem,

$$\frac{2000}{\sin 135^\circ} = \frac{F_{AB}}{\sin 120^\circ} \quad \therefore \; F_{AB} = 2449.49 \text{ N}$$

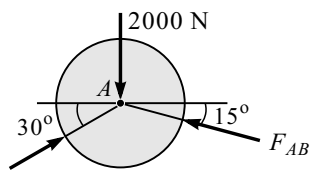

Fig. 3.28(b)

(iii) Consider the F.B.D. of cylinder W_B = 1000 N [Fig. 3.28(c)].

$\Sigma F_x = 0$

$2449.49 \cos 15^\circ - R \cos 45^\circ - P \sin 60^\circ = 0$

$R \cos 45^\circ = 2449.49 \cos 15^\circ - P \sin 60^\circ$ ... (I)

$\Sigma F_y = 0$

$R \cos 45^\circ - P \cos 60^\circ - 2449.49 \sin 15^\circ - 1000 = 0$

$R \cos 45^\circ = P \cos 60^\circ + 2449.49 \sin 15^\circ + 1000$... (II)

Now, solving Eqs. (I) and (II), we get

$P = 535.9$ N

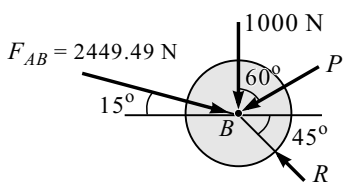

Fig. 3.28(c)

Problem 29

Find the support reactions at A, B, C for the rigid link DEF supported by the cylinders at D and F. The link is loaded by a single force of 20 kN as shown in the Fig. 3.29(a). Neglect friction and self-weight of link and cylinders. Take diameters of cylinders as 200 mm and $DE = EF$ = 300 mm.

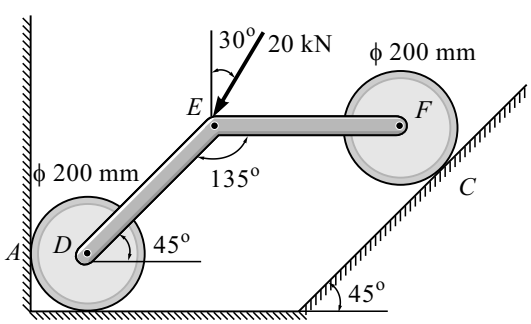

Fig. 3.29(a)

Solution

(i) Consider the F.B.D. of the entire system [Fig. 3.29(b)].

$\Sigma M_D = 0$

$20 \sin 30^\circ \times 300 \sin 45^\circ - 20 \cos 30^\circ \times 300 \cos 45^\circ$
$+ R_C \cos 45^\circ \times 300 \sin 45^\circ + R_C \sin 45^\circ \times (300 \cos 45^\circ + 300) = 0$

$R_C = 3.03$ kN $(45^\circ \nwarrow)$

(ii) $\Sigma F_x = 0$

$R_A - 20 \sin 30^o - 3.03 \cos 45^o = 0$

$R_A = 12.14 \text{ kN } (\rightarrow)$

$\Sigma F_y = 0$

$R_B - 20 \cos 30^o + 3.03 \sin 45^o = 0$

$R_B = 15.18 \text{ kN } (\uparrow)$

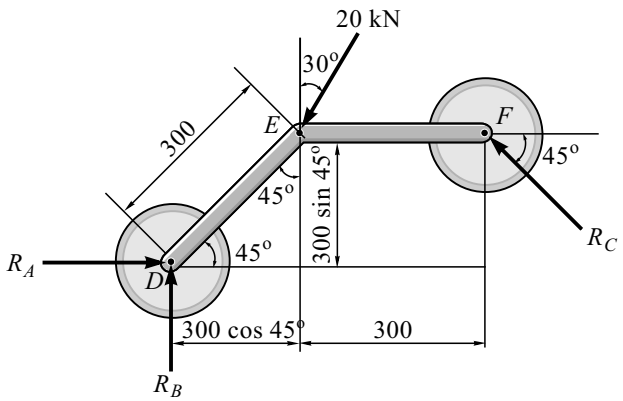

3.29(b) : F.B.D. of Entire System
{All dimensions are in mm}

Problem 30

Two balls D and E of weights P and Q can slide freely along the frictionless bars AC and BC. The balls are connected by an inextensible string DE as shown in Fig. 3.30(a). Find the value of the angle θ defining the position of equilibrium.

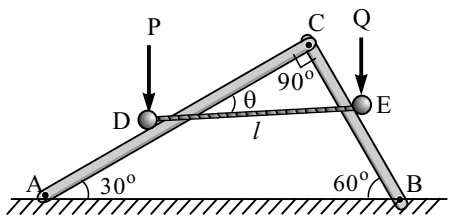

Fig. 3.30(a)

Solution

(i) Draw perpendicular from D and E to inclined AC and BC respectively and mark O as there intersection.

Take the components of P and Q as shown in Fig. 3.30(b).

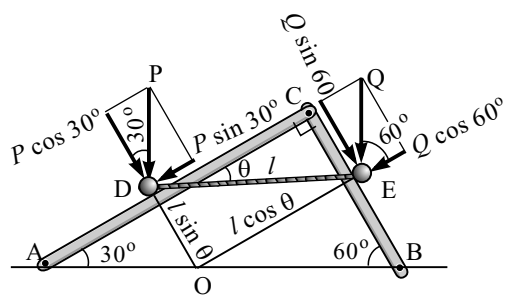

Fig. 3.30(b) : Geometrical Angles and Distances

(ii) $\Sigma M_O = 0$

$P \sin 30^o \times l \sin \theta - Q \sin 60^o \times l \cos \theta = 0$

$P \sin 30^o \times l \sin \theta = Q \sin 60^o \times l \cos \theta$

$$\frac{\sin \theta}{\cos \theta} = \frac{Q}{P} \frac{\sin 60^o}{\sin 30^o}$$

$$\tan \theta = \frac{Q}{P}\sqrt{3}$$

$$\theta = \tan^{-1}\left(\frac{Q}{P}\sqrt{3}\right)$$

Problem 31

A bar AB pinned at A carries a load $W = 5$ kN. The cord attached at B is passing through frictionless pulley as shown in Fig. 3.31(a). Find the compression in the bar AB and also the limiting value of the tension in cord when bar approaches the vertical position.

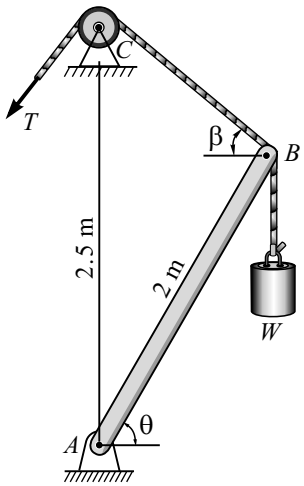

Fig. 3.31(a)

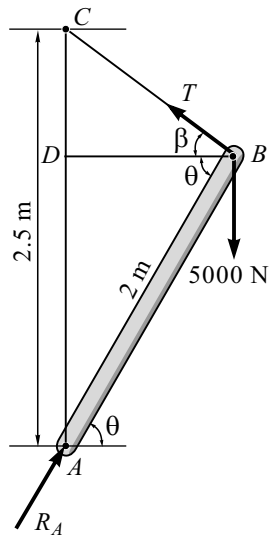

Fig. 3.31(b) : F.B.D. of Bar AB

Solution

(i) F.B.D. of bar AB is shown in Fig. 3.31(b).

(ii) $\Sigma F_y = 0$

$R_A \sin\theta + T \sin\beta - 5000 = 0$

$T \sin\beta = 5000 - R_A \sin\theta$ ...(I)

(iii) $\Sigma F_x = 0$

$R_A \cos\theta - T \cos\beta = 0$

$T \cos\beta = R_A \cos\theta$ ...(II)

(iv) Dividing Eq. (I) by Eq. (II), we get

$$\tan\beta = \frac{5000 - R_A \sin\theta}{R_A \cos\theta} \quad ...(III)$$

(v) By the geometrical configuration

$$\tan\beta = \frac{CD}{BD} = \frac{AC - AD}{BD} \quad ...(IV)$$

(vi) From Eqs. (III) and (IV), we get

$$\frac{2.5 - 2\sin\theta}{2\cos\theta} = \frac{5000 - R_A \sin\theta}{R_A \cos\theta}$$

$$2.5\, R_A - 2\, R_A \sin\theta = 10000 - 2\, R_A \sin\theta$$

$$R_A = \frac{10000}{2.5} \quad \therefore R_A = 4000 \text{ N}$$

While obtaining R_A in the above expression, the inclination of bar AB is not influencing the solution. So we concluded that reaction at A remains 4000 N for all values of θ as shown in Fig. 3.31(c).

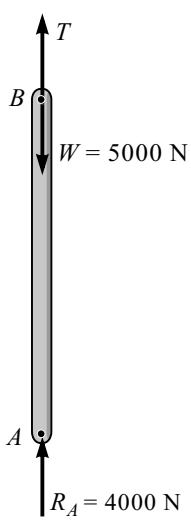

Fig. 3.31(c)

(vii) Consider the F.B.D. of bar AB in vertical position.

By equilibrium condition

$\Sigma F_y = 0 \Rightarrow R_A + T - 5000 = 0$

$T = 5000 - 4000$

$\therefore T = 1000$ N

Problem 32

A uniform rod AB of length $3R$ and weight W rest inside a hemispherical bowl of radius R as shown in Fig. 3.32(a). Neglecting friction, determine angle θ corresponding to equilibrium.

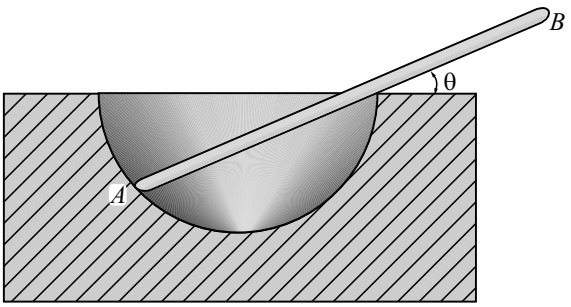

Fig. 3.32(a)

Solution

(i) Refer to the F.B.D. of rod AB shown in Fig. 3.32(b).

The one active force is the weight of rod W acting vertically down through the centre of gravity of rod AB and two reactive forces reaction R_A acting along the normal to hemisphere at A and passing through centre O and reaction R_D acting along the normal to the rod AB at D (knife edge support).

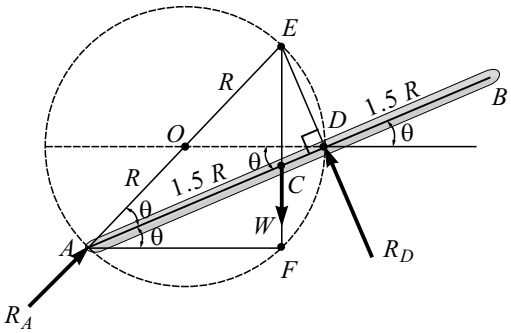

Fig. 3.32(b) : F.B.D. of Rod *AB*

(ii) By three-force principle in equilibrium these three forces must pass through a common point (say E). This point E must lie on the circle as shown because $\angle ADE = 90^o$ (Angle subtended by a diameter at any point lying on the circumference of the circle is a right angle).

(iii) By the geometry of the figure,

$\angle\theta = \angle ODA = \angle OAD = \angle DAF$

In $\Delta\, EAF$ and $\Delta\, CAF$

$EA = 2\,R$ and $CA = 1.5\,R$

$\angle EAF = 2\theta$ and $\angle CAF = \theta$

$AF = 2\,R\cos 2\theta$ and $AF = 1.5\,R\cos\theta$

(iv) $2\,R\cos 2\theta = 1.5\,R\cos\theta$

$2\cos 2\theta = 1.5\cos\theta$

$2(2\cos^2\theta - 1) = 1.5\cos\theta$

$4\cos^2\theta - 1.5\cos\theta - 2 = 0$

Solving the quadratic equation, we get $\theta = 23.2^o$

Problem 33

Two bodies weighting 150 N and 200 N respectively rest on a cylinder and are connected by a rope as shown in Fig. 3.33(a). Find the reaction of cylinder on the bodies, the tension in rope and angle θ. Assume all surfaces to be smooth.

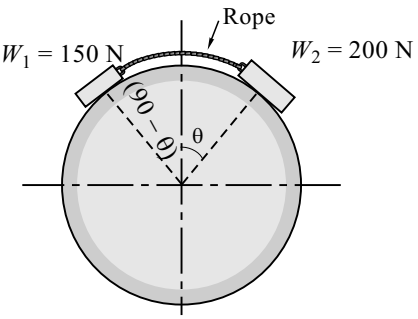

Fig. 3.33(a)

Solution

(i) Consider the F.B.D. of W_1 = 150 N

Applying Lami's theorem,

$$\frac{150}{\sin 90^o} = \frac{T}{\sin (90 + \theta)^o} = \frac{R_1}{\sin (180 - \theta)^o}$$

$$T = 150 \sin (90 + \theta)^o \qquad \text{..... (I)}$$

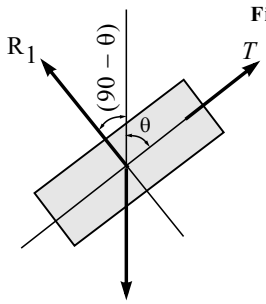

W_1 = 150 N

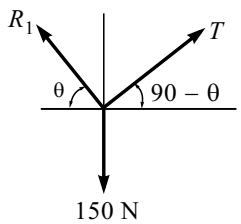

Fig. 3.33(b) : F.B.D. of 150 N

(ii) Consider the F.B.D. of W_2 = 200 N

$$\frac{200}{\sin 90^o} = \frac{T}{\sin (180 - \theta)^o} = \frac{R_2}{\sin (90 + \theta)^o}$$

$$T = 200 \sin (180 - \theta)^o \qquad \text{..... (II)}$$

(iii) From Eqs. (I) and (II), we get

$$150 \sin (90 + \theta)^o = 200 \sin (180 - \theta)^o$$

$$150 \cos \theta = 200 \sin \theta$$

$$\tan \theta = \frac{150}{200} \qquad \therefore \ \theta = 36.87^o$$

From Eq. (I), we get

$$T = 120 \text{ N}$$

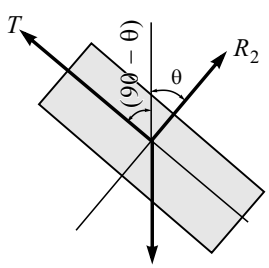

W_2 = 200 N

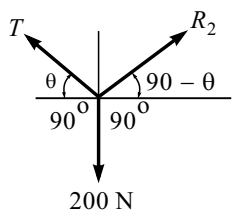

Fig. 3.33(c) : F.B.D. of 200 N

(iv) Now,

$$R_1 = 150 \sin (180^o - \theta) \quad \text{and} \quad R_2 = 200 \sin (90^o + \theta)$$

$$R_1 = 150 \sin (180^o - 36.87^o) \quad \text{and} \quad R_2 = 200 \sin (90^o + 36.87^o)$$

$$R_1 = 90 \text{ N} \quad \text{and} \quad R_2 = 160 \text{ N}$$

$\therefore$ Reaction of the cylinder on the bodies are R_1 = 90 N and R_2 = 160 N

3.11 TYPES OF BEAMS

In a structure, horizontal member which takes transverse load in addition to other loading is called ***beam***. Transverse load means *load perpendicular to the length of the beam*.

In engineering structures like bridges, beam is one of the important structural member. In trusses and frames, pin joined members take only tensile or compressive load. Beam is capable to take all types of load, i.e., transverse load, tensile load, compressive load, twisting load, etc.

Further beams may carry different types of transverse load such as point load, uniformly distributed load, uniformly varying load, etc.

Classification of Beams **:** Beams are classified depending upon the type of support as shown below.

1. **Simply Supported Beam :** As the name indicates, it is the simplest of all beams which is supported by a hinge at one end and a roller at the other end.

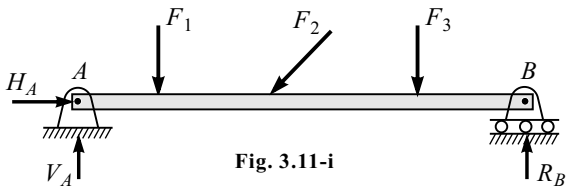

Fig. 3.11-i

2. **Simply Supported Beam with Overhang :** Here, one end or both the ends of simply supported beam is projected beyond the supports which means that the portion of beam extends beyond the hinge and roller supports.

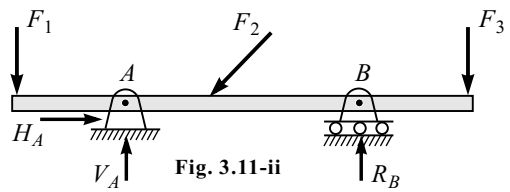

Fig. 3.11-ii

3. **Cantilever Beam :** A beam which is fixed at one end and free at the other end is called a *cantilever beam*. The fixed end is also known as built-in support. The common example is wall bracket, projected balconies, etc. One end of the beam is cast in concrete and is nailed, bolted, riveted or welded. The fixed end does not allow horizontal linear movement, vertical linear movement or rotational movement.

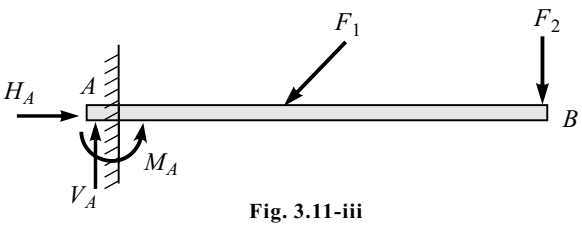

Fig. 3.11-iii

4. **Continuous Beam :** A beam which has more than two support is said to be a *continuous beam*. The extreme left and right supports are the end supports of the beam. Two intermediate supports are shown. Such beams are also called *statically indeterminate beams* because the reactions cannot be obtained by the equation of equilibrium.

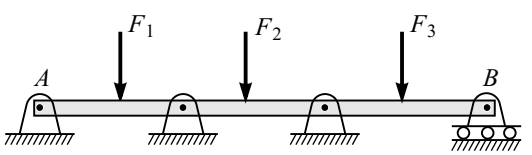

Fig. 3.11-iv

5. **Beams Linked with Internal Hinges :** Here two or more beams are connected to each other by pin joint and continuous beam is formed. Such a joint are called *internal hinges.* Internal hinges allow us to draw F.B.D. of beam at its joint, if required.

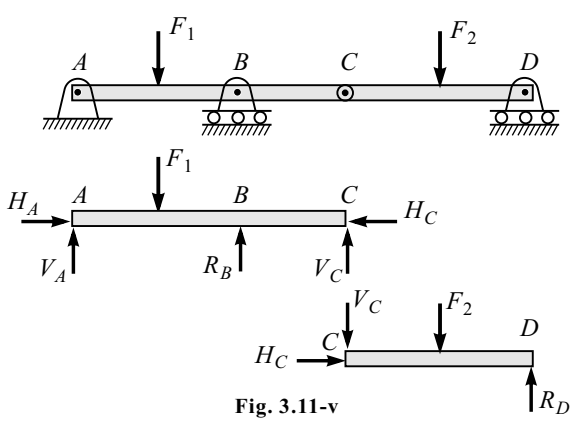

Fig. 3.11-v

3.12 TYPES OF LOAD

There are two types of load: point load and distributed load.

1. **Point Load :** If the whole intensity of load is assumed to be concentrated at a point then it is known as *point load*.
   Refer to Fig. 3.12-i.

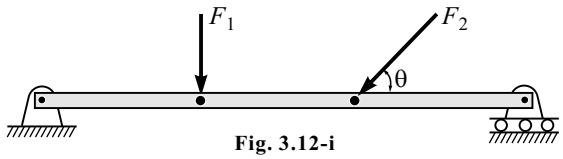

Fig. 3.12-i

2. **Distributed Load :** The concept of a centroid of an area may be used to solve problem dealing with a beam supporting a distributed load. This load may consist of the weight of materials supported directly or indirectly by the beam or it may be caused by wind or hydraulic pressure. The distributed load may be represented by *plotting the load intensity W supported per unit length*. The load intensity is expressed in N/m or kN/m.

(a) ***Uniformly Distributed Load (UDL)*** **:** If the whole intensity of load is distributed uniformly along the length of loading then it is called Uniformly Distributed Load (UDL). For example a truck loaded with sand of equal height and slab of a building flooring.

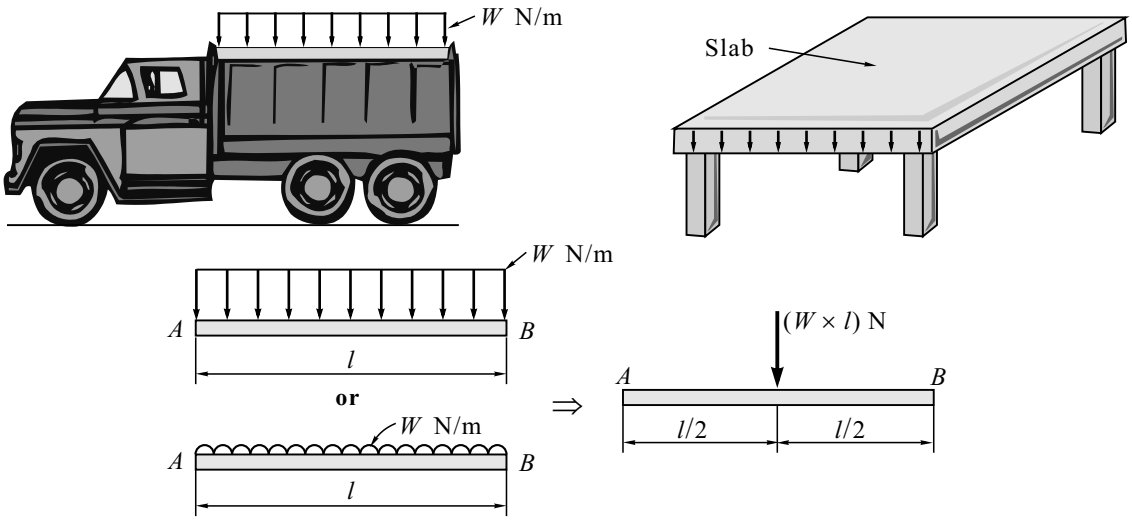

Fig. 3.12-ii

Example

A uniformly distributed load on a beam can be replaced by a concentrated point load. The magnitude of this equivalent point load is equal to the area under loading diagram and it acts through the centroid. The area under the loading diagram is calculated by multiplying the load intensity with length of loading.

Refer to the adjacent figure.

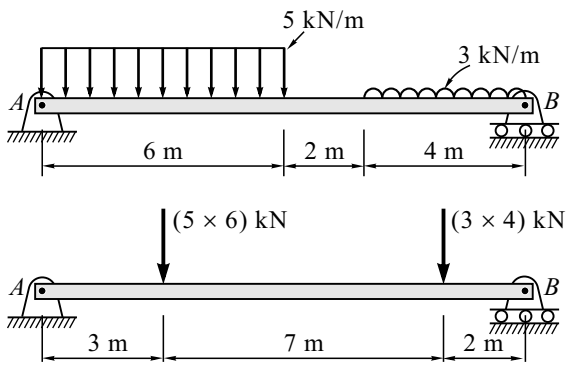

(b) ***Uniformly Varying Load (UVL)*** **:** If the whole intensity of load is distributed uniformly at varying rate along the length of loading then, it is known as Uniformly Varying Load (UVL). For example a truck loaded with sand, hydraulic pressure varies linearly with the depth.

Refer to Fig. 3.12-iii.

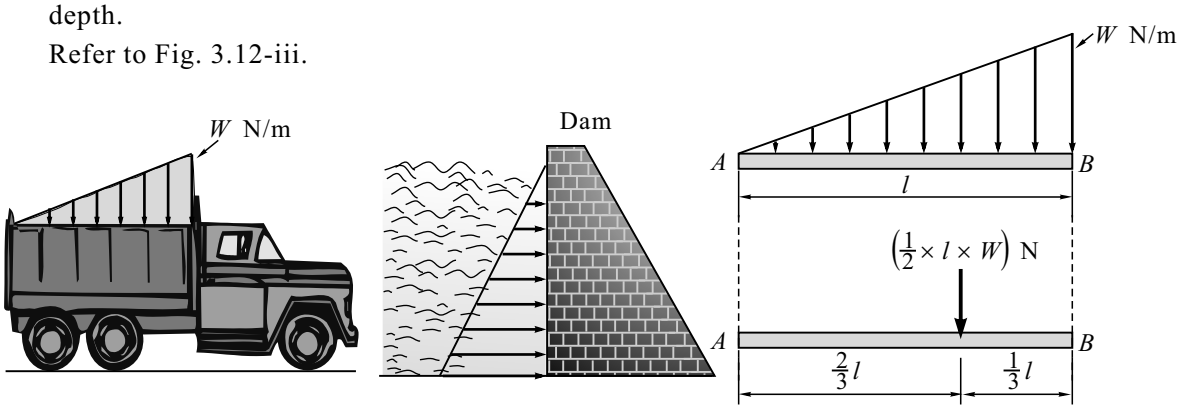

Fig. 3.12-iii

Example

A uniformly varying load on a beam can be replaced by a concentrated point load. The magnitude of this equivalent point load is equal to the area under loading diagram and it acts through the centroid. Generally, UVL is represented by right angled triangle. Area under loading diagram is the area of triangle, i.e.,

$$\frac{1}{2} \times \text{Length of loading} \times \text{Load intensity}$$

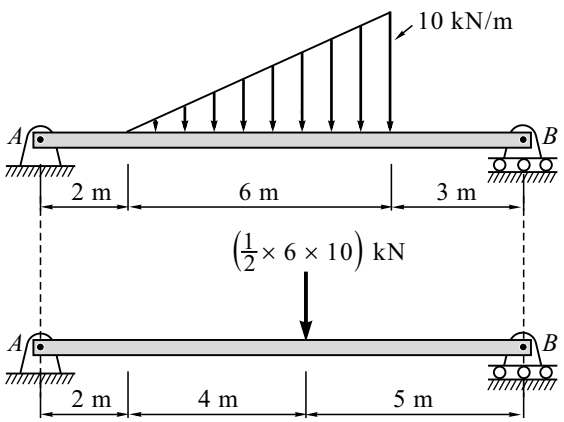

(c) ***UDL and UVL Combined***

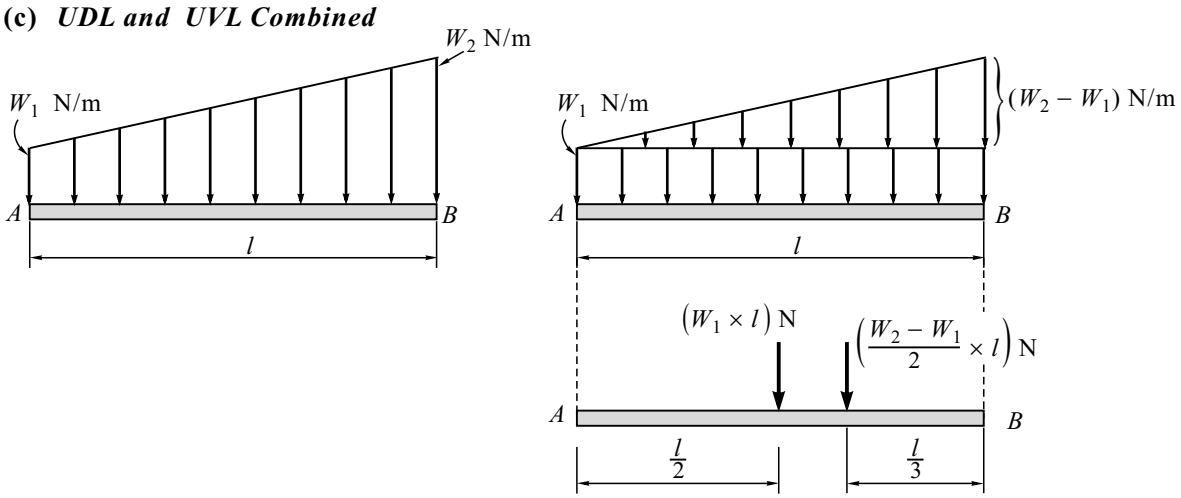

Fig. 3.12-iv

Example

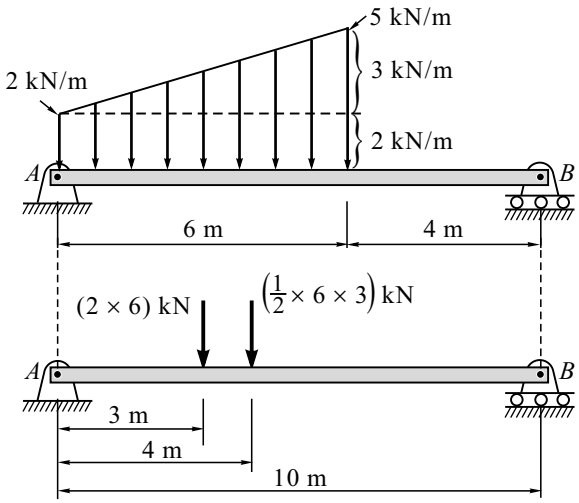

(d) ***Varying Load with Some Relation*** **:** The varying load is given by some relation, say parabolic nature. It can be replaced by concentrated point load. The magnitude of the equivalent point load is *equal to the area under loading diagram and it acts through the centroid.*

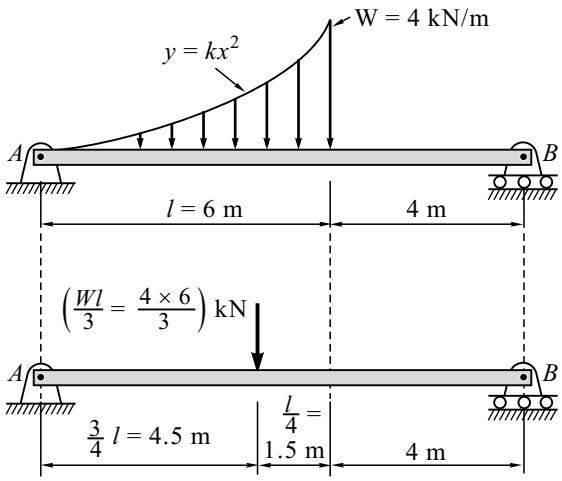

Fig. 3.12-v

(e) ***Couple***

Example

Though on beam, couples C_1 = 5 kN-m and C_2 = 7 kN-m are shown at specific positions but we know that couple is a free vector, so it can act anywhere along the beam AB. In other words, distance of couples C_1 and C_2 from point A given 2 m and 6 m, respectively, has no significance as far as position is concern. As per the requirement of solution say $\Sigma\, M_A$, we can consider given couples C_1 = 5 kN-m (↻) and C_2 = 7 kN-m (↺).

Refer to Fig. 3.12-vi.

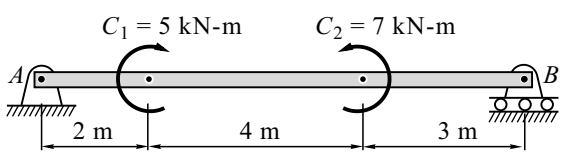

Fig. 3.12-vi

Solved Problems on Support Reactions of Beams

Problem 34

Calculate the support reactions for the beam shown in Fig. 3.34(a).

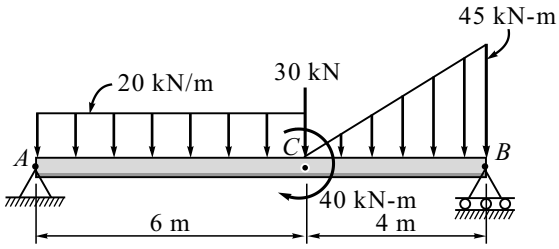

Fig. 3.34(a)

Solution

(i) Consider the F.B.D. of beam AB. [Fig. 3.34(b)]

(ii) $\Sigma M_A = 0$

$-120 \times 3 - 30 \times 6 - 40 - 90 \times 8.67 + R_B \times 10 = 0$

$R_B = 136.03$ kN (↑)

(iii) $\Sigma F_x = 0$

$H_A = 0$

($\because$ there is no horizontal force acting)

(iv) $\Sigma F_y = 0$

$V_A - 120 - 30 - 90 + 136.03 = 0$

$V_A = 103.97$ kN (↑)

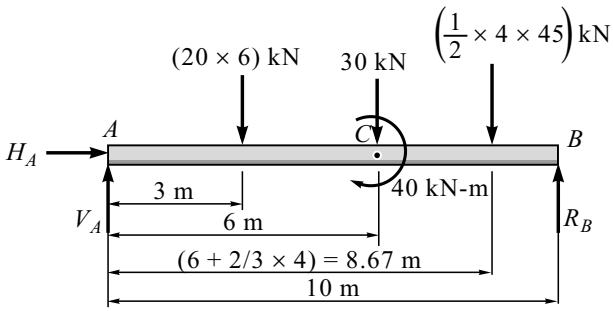

Fig. 3.34(b)

Problem 35

Find the support reactions at A and B for the beam loaded as shown in Fig. 3.35(a).

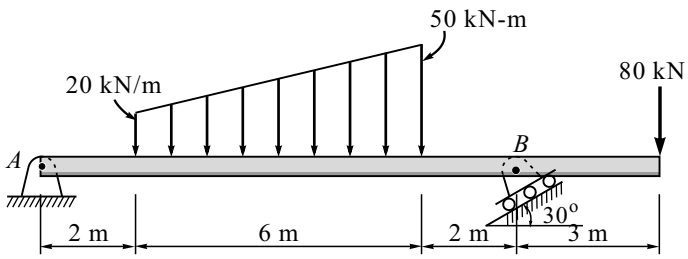

Fig. 3.35(a)

Solution

(i) Consider the F.B.D. of beam AB [Fig. 3.35(b)].

(ii) $\Sigma M_A = 0$

$R_B \sin 60^\circ \times 10 - 120 \times 5 - 90 \times 6 - 80 \times 13 = 0$

$R_B = 251.73$ kN (60°)

(iii) $\Sigma F_x = 0$

$H_A - 251.73 \cos 60^\circ = 0$

$H_A = 125.87$ kN (→)

(iv) $\Sigma F_y = 0$

$V_A - 120 - 90 + 251.73 \sin 60^\circ - 80 = 0$

$V_A = 72$ kN (↑)

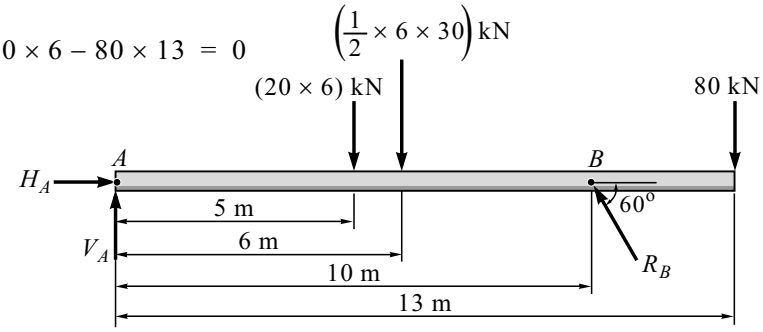

Fig. 3.35(b)

Problem 36

Find analytically the support reaction at B and the load P, for the beam shown in Fig. 3.36(a), if the reaction of support A is zero.

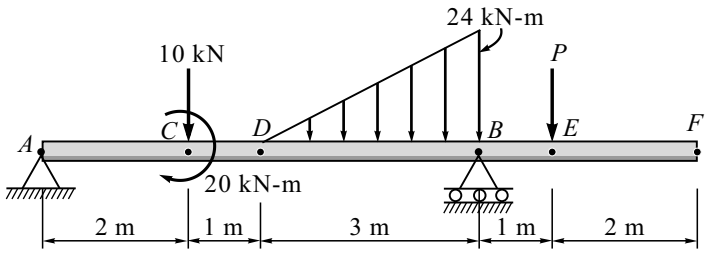

Fig. 3.36(a)

Solution

(i) Consider the F.B.D. of beam AF.

(ii) $\Sigma F_y = 0$

$V_A + R_B - 10 - 36 - P = 0 \quad (V_A = 0 \text{ given})$

$R_B - P = 46 \qquad ...(I)$

(iii) $\Sigma M_A = 0$

$R_B \times 6 - 10 \times 2 - 20 - 36 \times 5 - P \times 7 = 0$

$6 R_B - 7 P = 220 \qquad ...(II)$

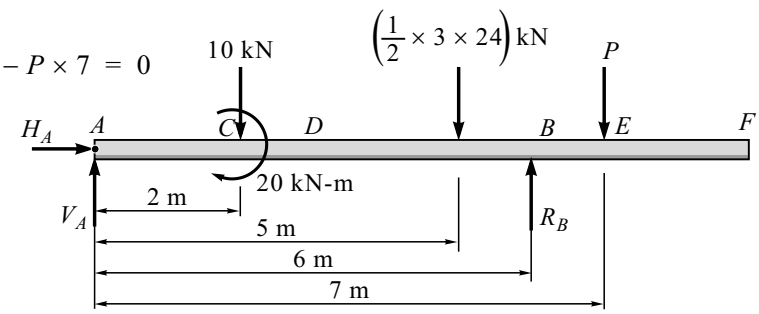

Fig. 3.36(b) : F.B.D of Beam *AF*

(iv) Solving Eqs. (I) and (II)

$R_B = 102 \text{ kN } (\uparrow)$

(v) From Eq. (I)

$P = 102 - 46$

$P = 56 \text{ kN } (\downarrow)$

Problem 37

Find the support reactions at A and F for the given Fig. 3.37(a).

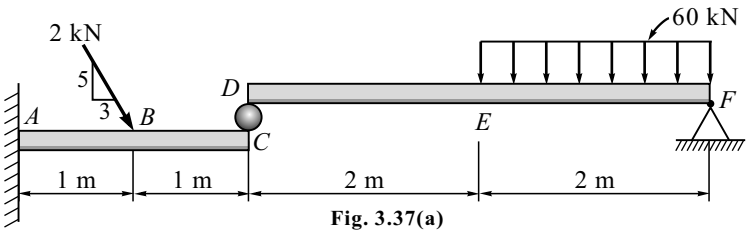

Fig. 3.37(a)

Solution

(i) Consider the F.B.D. of beam DF [Fig. 3.37(b)].

$\Sigma M_F = 0$

$120 \times 1 - R_D \times 4 = 0 \quad \therefore \; R_D = 30 \text{ kN}$

$\Sigma F_x = 0 \qquad \therefore \; H_F = 0$

$\Sigma F_y = 0$

$R_D + V_F - 120 = 0$

$V_F = 90 \text{ kN } (\uparrow)$

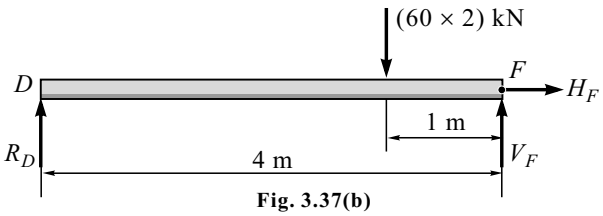

Fig. 3.37(b)

(ii) Consider the F.B.D. of beam AC [Fig. 3.37(c)].

$\Sigma M_A = 0$

$M_A - 2 \sin 59.04^\circ \times 1 - 30 \times 2 = 0$

$M_A = 61.72 \text{ kN-m } (\circlearrowleft)$

$\Sigma F_x = 0$

$2 \cos 59.04^\circ - H_A = 0$

$H_A = 1.03 \text{ kN } (\leftarrow)$

$\Sigma F_y = 0$

$V_A - 2 \sin 59.04^\circ - 30 = 0$

$V_A = 31.72 \text{ kN } (\uparrow)$

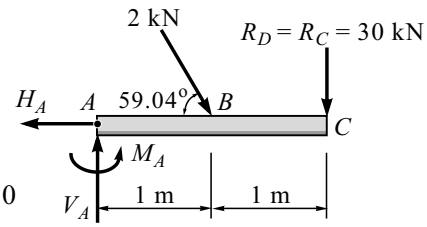

Fig. 3.37(c)

Problem 38

Two beams AB and CD are arranged as shown in Fig. 3.38(a). Find the support reactions at D.

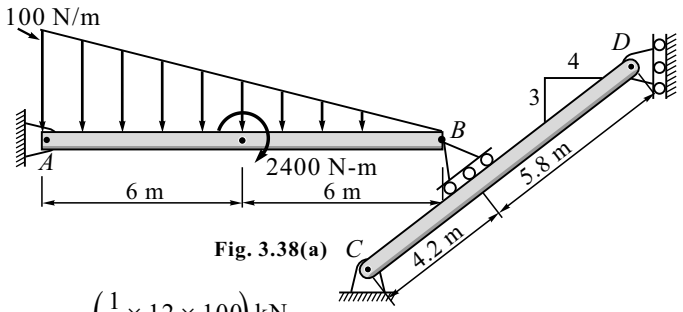

Fig. 3.38(a)

Solution

(i) Consider the F.B.D. of beam AB.

$\Sigma M_A = 0$

$R_B \sin 53.13^\circ \times 12 - 600 \times 4 - 2400 = 0$

$R_B = 500$ N

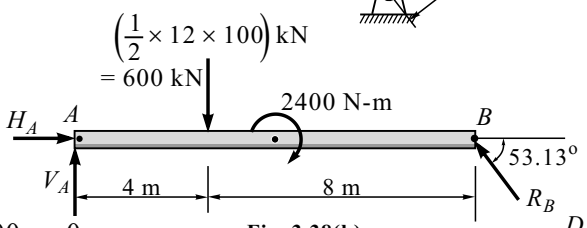

Fig. 3.38(b)

(ii) Consider the F.B.D. of beam CD.

$\Sigma M_C = 0$

$R_D \sin 36.87^\circ \times 10 - 500 \times 4.2 = 0$

$R_D = 350$ N $(\leftarrow)$

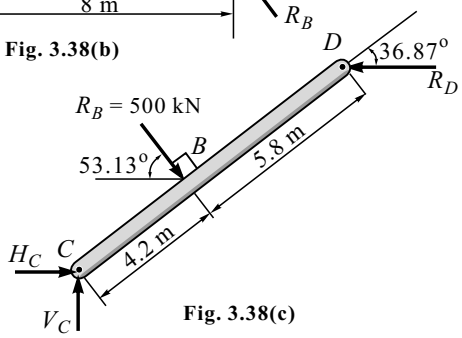

Fig. 3.38(c)

Problem 39

Determine the intensity of distributed load W at the end C of the beam ABC shown in Fig. 3.39(a), for which the reaction at C is zero. Also calculate the reaction at B.

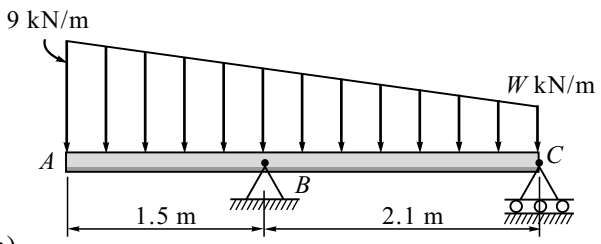

Fig. 3.39(a)

Solution

(i) Consider the F.B.D. of beam ABC with equivalent point load shown in Fig. 3.39(b).

(ii) $\Sigma M_B = 0$

$\frac{1}{2} \times 3.6 \times (9 - W) \times 0.3 + R_C \times 0 - W \times 3.6 \times 0.3 = 0$

$4.86 - 0.54W - 1.08W = 0$

$1.62\,W = 4.86 \quad \therefore W = 3$ kN

(iii) $\Sigma F_x = 0 \quad \therefore H_B = 0$

(iv) $\Sigma F_y = 0$

$V_B - \frac{1}{2} \times 3.6 \times (9 - W) - W \times 3.6 + 0 = 0$

$V_B = 10.8 + 10.8$

$\therefore V_B = 21.6$ kN $(\uparrow)$

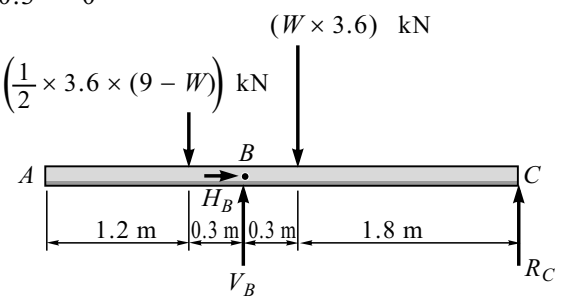

Fig. 3.39(b) : F.B.D of Beam *ABC*

Problem 40

Bars AB and CD are rigidly connected by welding at D as shown in Fig. 3.40(a). Bar AB weighs 5 kN/m whereas weight of bar CD is negligible.

Determine the support reactions.

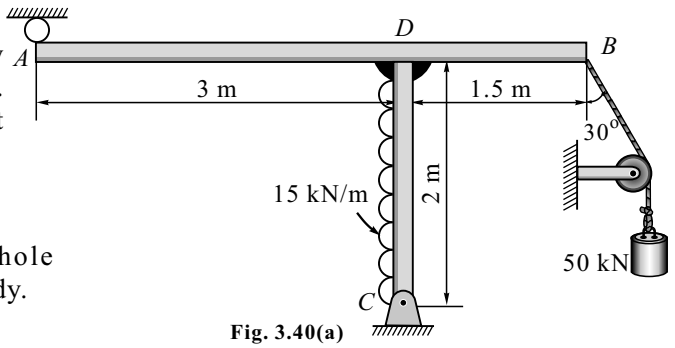

Fig. 3.40(a)

Solution

(i) Consider the F.B.D. of the whole structure since it is a single rigid body.

(ii) $\Sigma M_C = 0$

$R_A \times 3 + (4.5 \times 5) \times 0.75 - 50 \cos 30^o \times 1.5$

$- 50 \sin 30^o \times 2 - (15 \times 2) \times 1 = 0$

$R_A = 42.69$ kN (↓)

(iii) $\Sigma F_x = 0$

$(15 \times 2) + 50 \sin 30^o - H_C = 0$

$H_C = 55$ kN (←)

(iv) $\Sigma F_y = 0$

$V_C - R_A - (4.5 \times 5) - 50 \cos 30^o = 0$

$V_C = 108.49$ kN (↑)

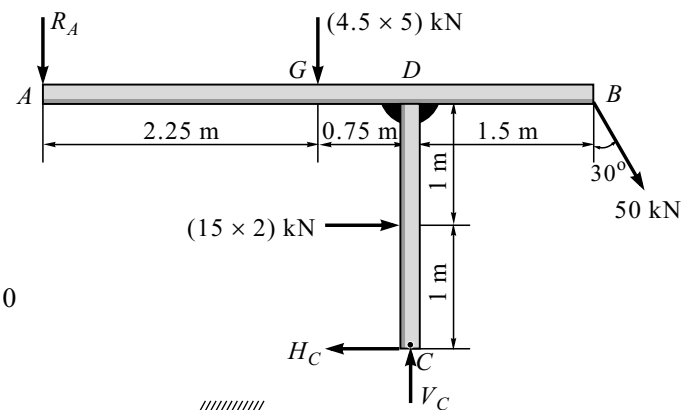

Fig. 3.40(b)

Problem 41

A single rigid bar ABC of 'L' shape is loaded and supported as shown Fig. 3.41(a). Find the support reactions.

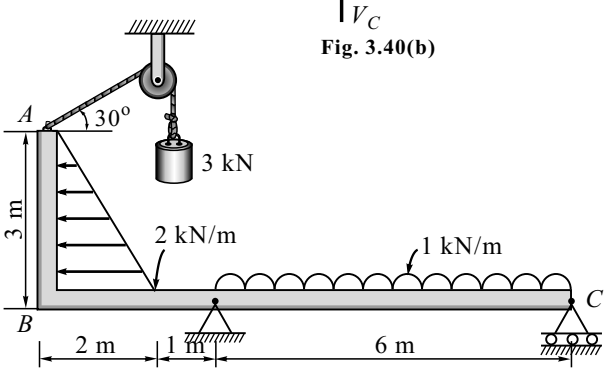

Fig. 3.41(a)

Solution

(i) Consider the F.B.D. of beam ABC.

(ii) $\Sigma M_D = 0$

$R_C \times 6 - 3 \cos 30^o \times 3 - 3 \sin 30^o \times 3$

$- 6 \times 3 + \left(\frac{1}{2} \times 3 \times 2\right) \times 1 = 0$

$R_C = 4.55$ kN (↑)

(iii) $\Sigma F_x = 0$

$3 \cos 30^o - \left(\frac{1}{2} \times 3 \times 2\right) + H_D = 0$

$H_D = 0.4$ kN (→)

(iv) $\Sigma F_y = 0$

$V_D + 3 \sin 30^o + R_C - 6 = 0$

$V_D = -0.05$ (Wrong assumed direction)

$V_D = 0.05$ kN (↓)

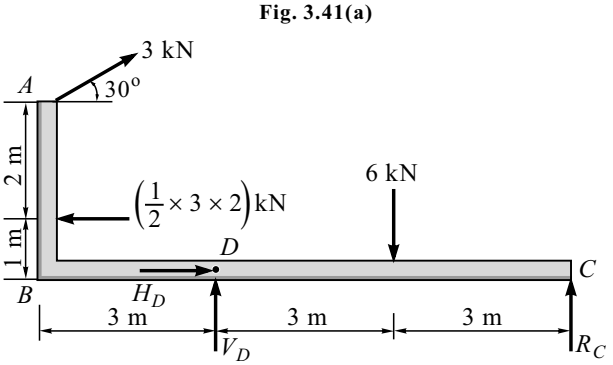

Fig. 3.41(b)

Problem 42

Find the support reactions of the beam shown in Fig. 3.42(a). E is internal hinge.

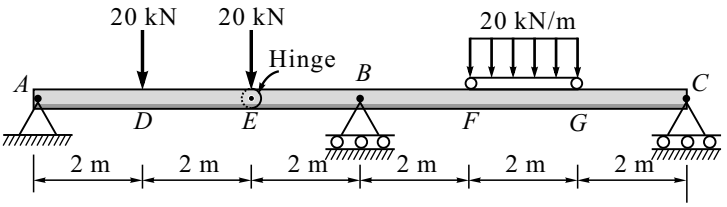

Fig. 3.42(a)

Solution

(i) Consider the F.B.D. of beam AE.

$\Sigma M_E = 0$

$20 \times 2 - V_A \times 4 = 0$

$V_A = 10 \text{ kN } (\uparrow)$

$\Sigma F_y = 0$

$V_A + V_E - 20 - 20 = 0$

$V_E = 30 \text{ kN } (\uparrow)$

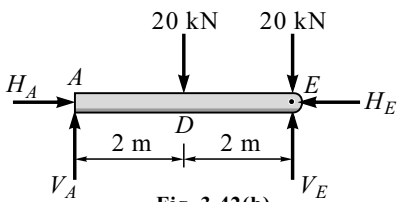

Fig. 3.42(b)

Since there is horizontal or inclined external force acting, therefore, horizontal component of reaction will be zero.

$H_A = H_E = 0$

(ii) Method I

Consider the F.B.D. of beam EC.

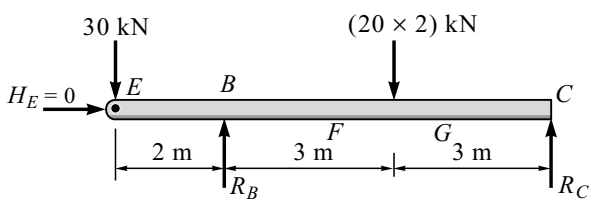

Fig. 3.42(c)

$\Sigma M_B = 0$

$30 \times 2 - 20 \times 2 \times 3 + R_C \times 6 = 0$

$R_C = 10 \text{ kN } (\uparrow)$

$\Sigma F_y = 0$

$R_B + R_C - 30 - 20 - 20 = 0$

$R_B = 60 \text{ kN } (\uparrow)$

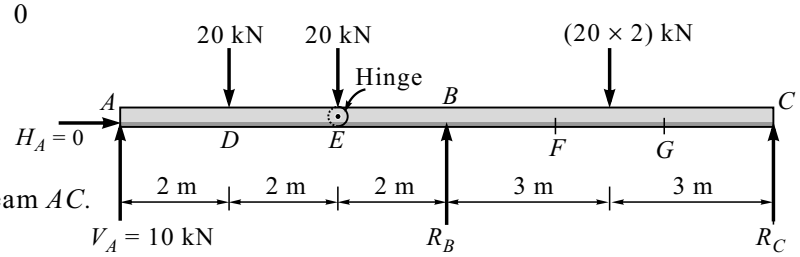

Fig. 3.42(d)

(iii) Method II

Consider the F.B.D. of beam AC.

$\Sigma M_B = 0$

$R_C \times 6 - 20 \times 2 \times 3 + 20 \times 2 + 20 \times 4 - 10 \times 6 = 0$

$R_C = 10 \text{ kN } (\uparrow)$

$\Sigma F_y = 0$

$10 + R_B + 10 - 20 - 20 - 20 \times 2 = 0$

$R_B = 60 \text{ kN } (\uparrow)$

SUMMARY

- **Equilibrium :** The resultant of force system acting on a body is zero, the body is in equilibrium.

  $\Sigma F_x = 0$, $\Sigma F_y = 0$ and $\Sigma M = 0$

- **Equilibrant :** It is a single force which brings the system to equilibrium, thus equilibrant is equal in magnitude, opposite in direction and collinear to resultant force.

- **Free Body Diagram (F.B.D.) :** Sketch of a body showing all active and reactive forces that acts on it after removing all supports with consideration of geometrical angles and distance given.

- **Smooth Surface Contact :** When a body is in contact with smooth (frictionless) surface at only one point, the reaction is a force normal to the surface, acting at the point of contact.

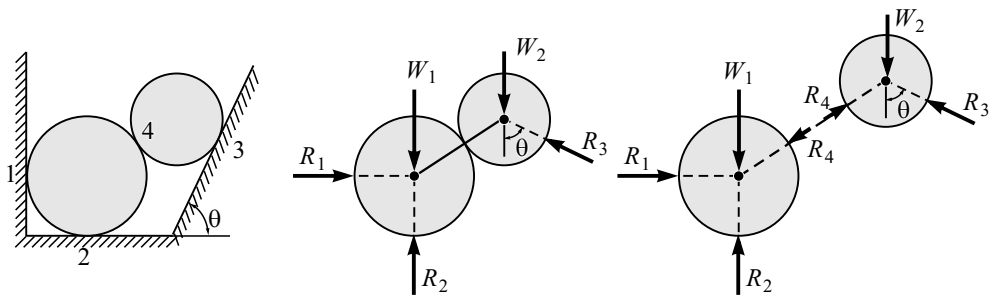

F.B.D. (Together) F.B.D. (Separate)

In this chapter, all contact surfaces are assumed to be a frictionless. Therefore, no F.B.D. is represented with frictional force.

- **Roller Support :** A roller support is free to roll along the surface on which it rests. Since the linear displacement in normal direction to surface of roller is restricted, it offers a reaction in normal direction to surface of roller.

Roller Support	Reaction (Assumed sense)
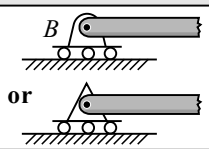	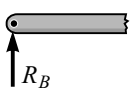
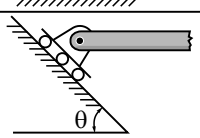	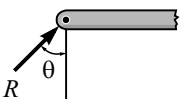

- **Hinge (Pin) Support :** The hinge support allows free rotation about the pin end but not linear displacement of that end. Since linear displacements are restricted in horizontal and vertical directions, the reaction offered at hinge support is resolved into two component, i.e., H_A and V_A. The direction of these two components are uncertain. Therefore, they are initially assumed in F.B.D.

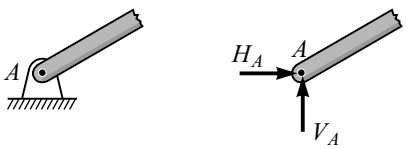

F.B.D.

- **Fixed (Built in) Support :** When the end of a beam is fixed (built in) then that support is said to be a fixed support. Fixed support neither allows linear displacement nor rotation of a beam. Due to these restrictions, the components' reactions offered at fixed supports are horizontal component H_A, vertical component V_A and couple component M_A. These components are shown in assumed direction.

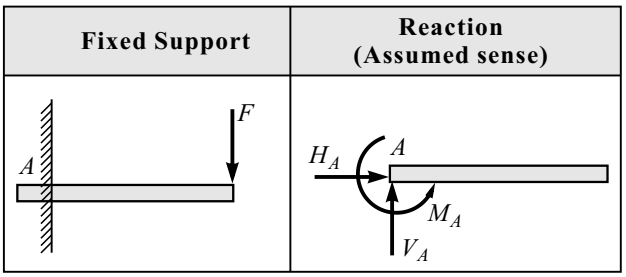

- **Rope and Frictionless Pulley Arrangement :** When a rope is passing over a frictionless pulley, then the tension on both sides of the rope is same.

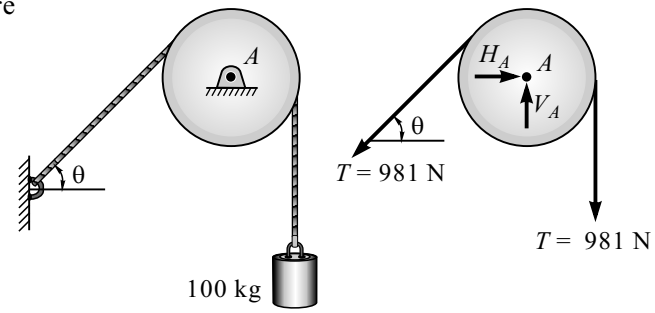

- String, rope, cord, cable, wire, thread, chain always experience tension which is shown by drawing an arrow away from the joint or the body in F.B.D.

  A block of mass m kg is suspended by a rope as shown.

  $T_{AB} \Rightarrow$ Tension in rope AB

  $T_{BC} \Rightarrow$ Tension in rope BC

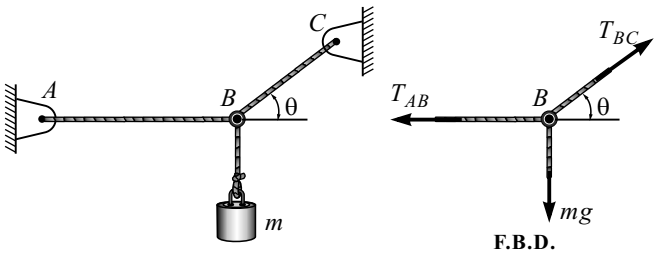

- **Two-Force Principle :** If a body is in equilibrium and acted upon by only two forces, then these two forces must be equal in magnitude, opposite in direction and collinear.
- **Three-Force Principle :** If a body is in equilibrium and subjected to three non-parallel coplanar forces, then it must be concurrent.
- **Three-Force Triangle Theorem :** Three non-parallel forces can be in equilibrium only when they lie in one plane, intersect in one point and their free vectors build a closed triangle.

  In other words, if three concurrent forces are in equilibrium then the arrangement of these three forces in tip-to-tail fashion will form a closed triangle.

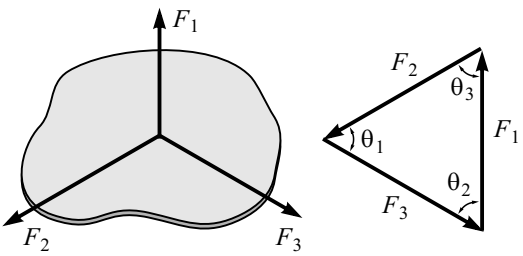

Referring to the force triangle shown in the above figure, we can use sine rule to solve the problem.

i.e.,
$$\frac{F_1}{\sin\theta_1} = \frac{F_2}{\sin\theta_2} = \frac{F_3}{\sin\theta_3}$$

- **Lami's Theorem** : If three concurrent coplanar forces acting on a body having same nature (i.e., pulling or pushing) are in equilibrium, then each force is proportional to the sine of angle included between the other two forces.

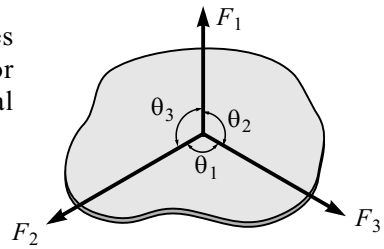

By Lami's theorem, we have

$$\frac{F_1}{\sin\theta_1} = \frac{F_2}{\sin\theta_2} = \frac{F_3}{\sin\theta_3}$$

- **Point Load :** If the whole intensity of load is assumed to be concentrated at a point then it is called a point load.

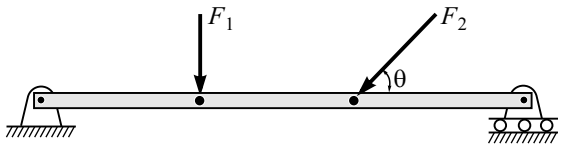

- **Uniformly Distributed Load (UDL) :** If the whole intensity of load is distributed uniformly along the length of loading then it is called as Uniformly Distributed Load (UDL).

A uniformly distributed load on a beam can be replaced by a concentrated point load. The magnitude of this equivalent point load is equal to the area under loading diagram and it acts through the centroid. Area under loading diagram is calculated by multiplying the load intensity with length of loading.

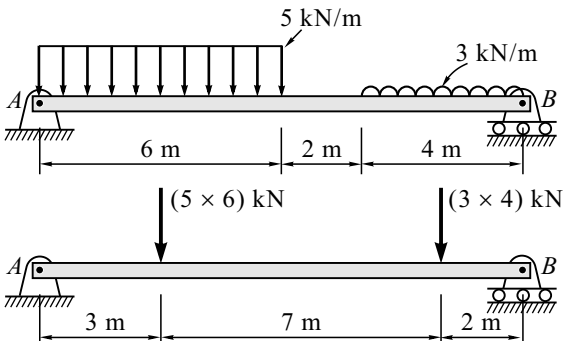

- **Uniformly Varying Load (UVL) :** If the whole intensity of load is distributed uniformly at varying rate along the length of loading then it is known as Uniformly Varying Load (UVL).

A uniformly varying load on a beam can be replaced by a concentrated point load. The magnitude of this equivalent point load is equal to the area under loading diagram and it acts through the centroid. Generally UVL is represented by right angled triangle. Area under loading diagram is the area of triangle, i.e.,

$$\frac{1}{2} \times \text{ Length of loading} \times \text{Load intensity.}$$

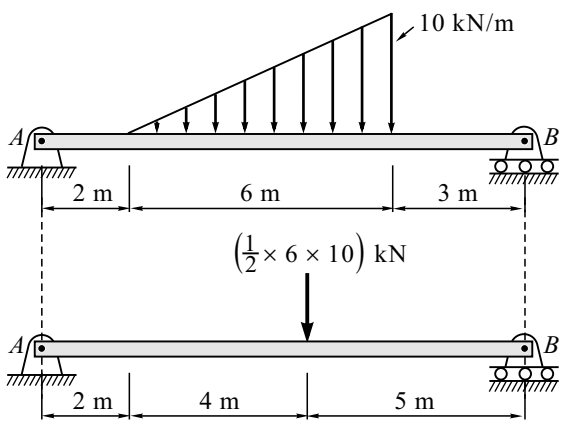

EXERCISES

[I] Problems

1. An electric light weighing 15 N hangs from a point C by the two strings AC and BC as shown in Fig. 3.E1. AC is inclined at 60° to the horizontal and BC at 45° to the vertical as shown. Using the Lami's theorem find the forces in the strings AC and BC.

[***Ans.*** $T_{AC} = 10.98$ N and $T_{BC} = 7.76$ N]

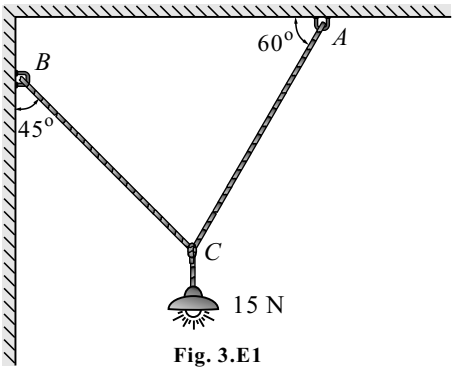

Fig. 3.E1

2. A force P is applied at O to the strings AOB as shown in Fig. 3.E2. If the tension in each string is 50 N, find the magnitude and direction of force P for equilibrium conditions.

[***Ans.*** $\theta = 7.5°$ and $P = 60.88$ N]

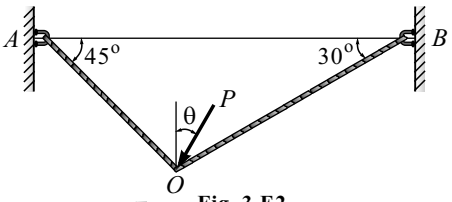

Fig. 3.E2

3. A smooth sphere of 2 kg mass is supported by a chain as shown in Fig. 3.E3. The length of chain AB is equal to the radius of the sphere. Draw free body diagram of each element and find the tension in the chain and reaction of the wall.

[***Ans.*** $T_{AB} = 22.6$ N and $R_C = 11.33$ N]

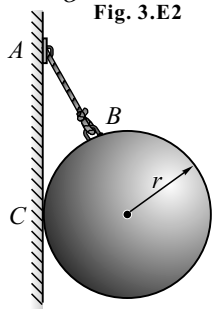

Fig. 3.E3

4. A smooth sphere of 500 N weight rests in a V shaped groove whose sides are inclined at 25° and 65° to the horizontal as shown in Fig. 3.E4. Find the reactions at A and B.

[***Ans.*** $R_A = 453.15$ N (65°) and
$R_B = 211.31$ N (25°)]

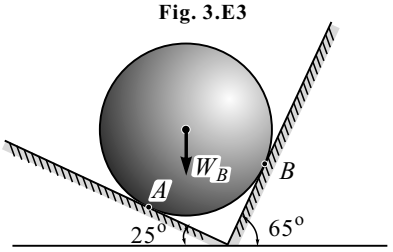

Fig. 3.E4

5. Determine the horizontal distance to which a 1 m long in an extensible string holding a weight of 500 N can be pulled before the string breaks. The string can withstand the maximum pull of 1000 N as shown in Fig. 3.E5. Determine also the required force F.

[***Ans.*** $F = 866$ N and $x = 0.86$ m]

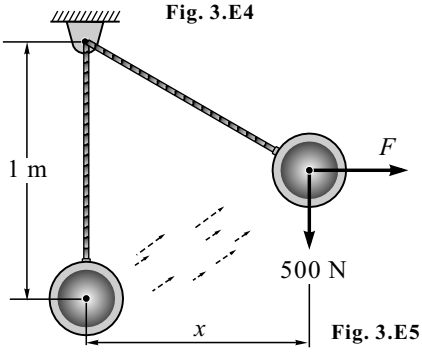

Fig. 3.E5

6. A bar AB of 1 kN weight is hinged to a vertical wall at A and supported by a cable BD as shown in Fig. 3.E6. Find the tension in the cable and the magnitude and direction of reaction at the hinge.

[***Ans.*** $T = 0.866$ kN and
$R_A = 0.5$ kN $\angle\theta = 30^\circ$]

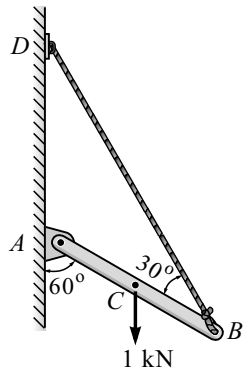

Fig. 3.E6

7. A string ACB of length l carries a small pulley C from which a load W is suspended as shown in Fig. 3.E7. Find the position of equilibrium as defined by the angle α.

Given : $d = \frac{l}{2}$, $h = \frac{l}{4}$.

[***Ans.*** $\alpha = 60^\circ$]

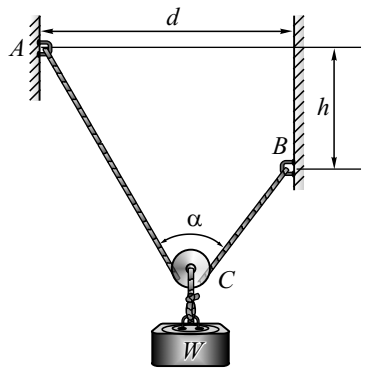

Fig. 3.E7

8. A system of connected flexible cables shown in Fig. 3.E8 is supporting two vertical forces of 200 N and 250 N at points B and D. Determine the forces in various segments of the cable.

[***Ans.*** $T_{DE} = 224.14$ N, $T_{BD} = 183.01$ N
$T_{BC} = 336.6$ N and $T_{AB} = 326.79$ N]

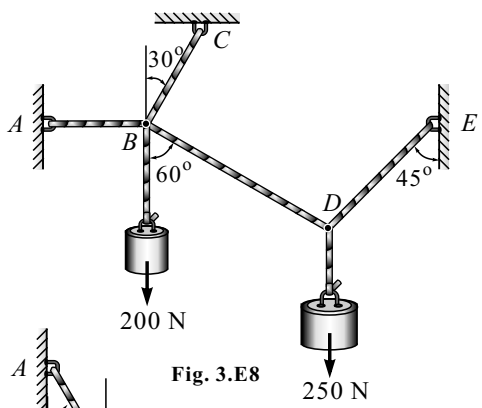

Fig. 3.E8

9. Two equal loads of 2500 N are supported by a flexible string $ABCD$ at points B and C as shown in Fig. 3.E9. Find the tension in the portion AB, BC, CD of the string.

[***Ans.*** $T_{AB} = 4330$ N, $T_{BC} = 2500$ N
and $T_{CD} = 2500$ N]

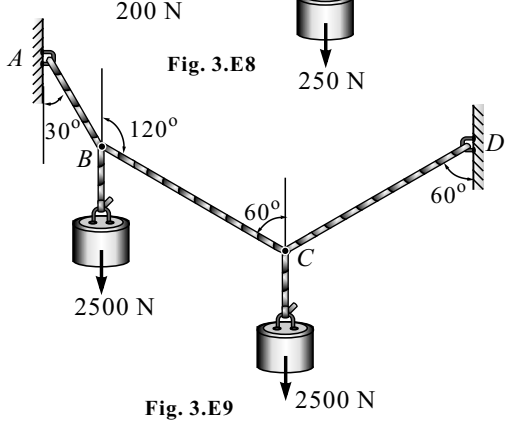

Fig. 3.E9

10. Two cables are tied together at C and loaded as shown in Fig. 3.E10. Determine the tensions in AC and BC.

[***Ans.*** $T_{AC} = 326$ N and $T_{BC} = 368$ N]

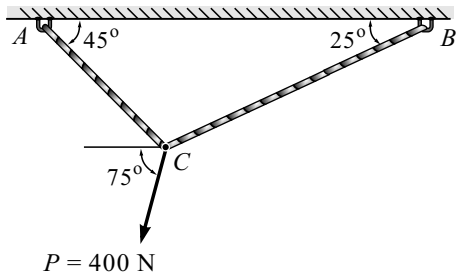

Fig. 3.E10

11. Two smooth spheres of 100 N weight and 250 mm radius each are in equilibrium in a horizontal channel of width 870 mm as shown in Fig. 3.E11. Find the reactions at the surfaces of contact A, B, C, D assuming all the surfaces to be smooth.

[***Ans.*** $R_A = 133.3$ N (→), $R_B = 200$ N (↑), $R_C = 133.3$ N (←) and $R_D = 166.6$ N]

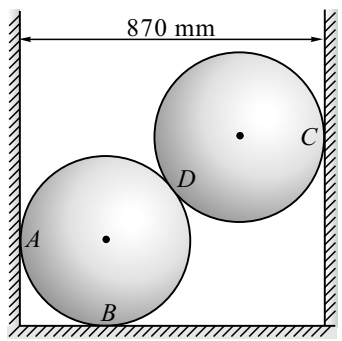

Fig. 3.E11

12. Two smooth cylinder with diameters 250 mm and 400 mm respectively are kept in a groove with slanting surfaces making angles 60° and 30° as shown in Fig. 3.E12. Determine the reactions at contact points A, B, and C.

[***Ans.*** $R_B = 297.37$ N, $R_B = 1125.85$ N and $R_A = 352.69$ N]

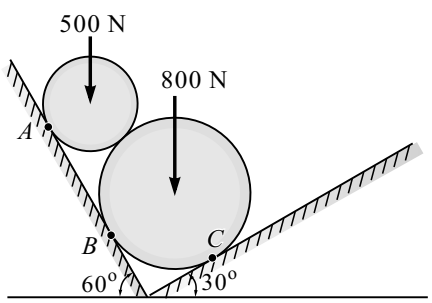

Fig. 3.E12

13. Two cylinders P and Q in a channel as shown in Fig. 3.E13. The cylinder P has a diameter of 100 mm and 200 N weight and Q has 180 mm and 500 N. Determine the reaction at all the contact surfaces.

[***Ans.*** $R_1 = 134.2$ N (←), $R_2 = 240.8$ N, $R_3 = 154.9$ N (∠30°) and $R_4 = 622.5$ N (↑)]

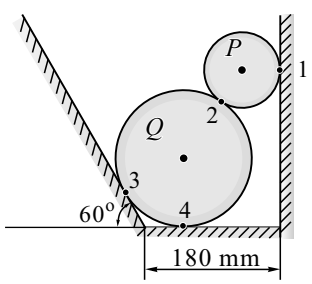

Fig. 3.E13

14. Two identical rollers each of 500 N weight are kept in a right-angle frame *ABC* having negligible weight as shown in Fig. 3.E14. Assuming smooth surfaces, find the reactions induced at the points *P*, *Q*, *R* and *S*. Also find the reactions at *B* and *C*.

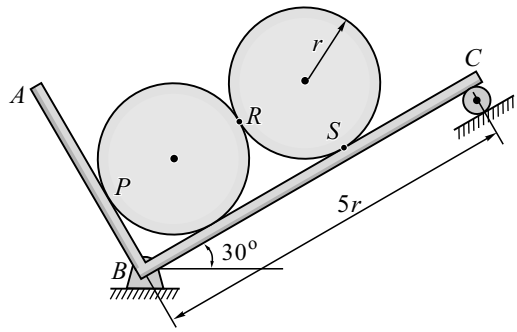

Fig. 3.E14

[**Ans.** $R_P = 500$ N, $R_Q = R_S = 433$ N,
$R_R = 250$ N, $R_C = 246.41$ N $(60^\circ \nwarrow)$,
$H_B = 123.21$ N $(\rightarrow)$ and $V_B = 786.6$ N $(\uparrow)$]

15. A light bar is suspended from a cable *BE* and supports a 200 N block at *C*. The extremities *A* and *D* of the bar are in contact with frictionless vertical walls as shown in Fig. 3.E15. Determine the tension in cable *BE* and the reactions at *A* and *D*.

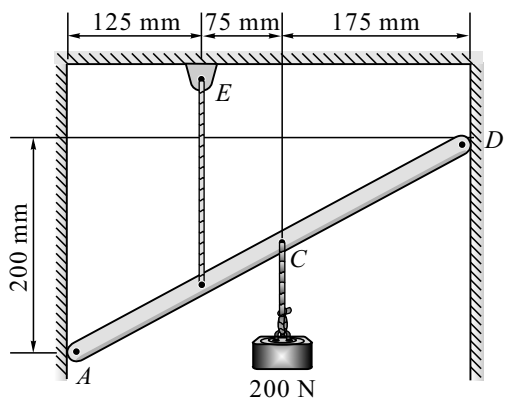

Fig. 3.E15

[**Ans.** $T = 200$ N, $R_D = 75$ N $(\leftarrow)$
and $R_A = 75$ N $(\rightarrow)$]

16. Neglecting friction, determine the tension in cable *ABD* and the reaction at support *C* as shown in Fig. 3.E16.

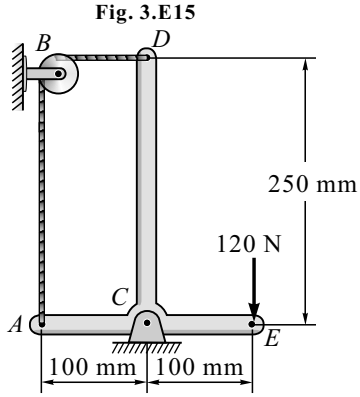

Fig. 3.E16

[**Ans.** $T = 80$ N,
$H_C = 80$ N $(\rightarrow)$ and
$V_{BC} = 40$ N $(\uparrow)$]

17. Determine the tension in cable *BC* as shown in Fig. 3.E17. Neglect the self-weight of *AB*.

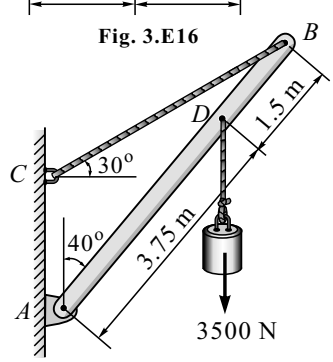

Fig. 3.E17

[**Ans.** $V_A = 5850$ N,
$H_A = 4070.3$ N,
and $T = 4700$ N]

18. The frame in Fig. 3.E18 shows supports part of the roof of a small building. Knowing that the tension in the cable is 150 kN, determine the reaction at the fixed end E.

[***Ans.*** $H_E = 87$ kN (←),
$V_E = 200$ kN (↑) and
$M_E = 180$ kN-m (↺)]

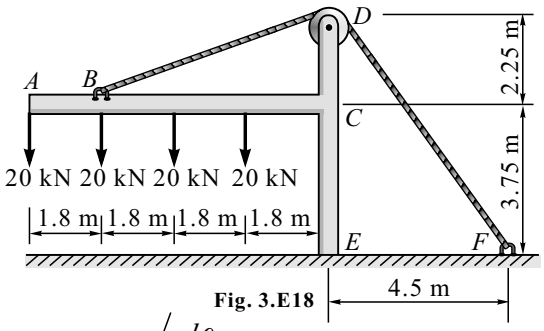

Fig. 3.E18

19. Find the tension in the cable CD and the reaction at B as shown in Fig. 3.E19.

(All dimensions are in mm)

[***Ans.*** $T = 184$ N (θ) $\theta = 35^o$
and $R_B = 528$ N (θ) $\theta = 73.4^o$]

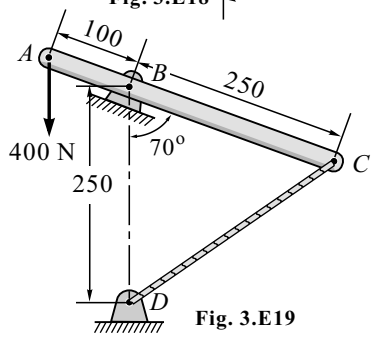

Fig. 3.E19

20. Determine the reactions at A and E if $P = 50$ N as shown in Fig. 3.E20. What is the maximum value that P may have for static equilibrium ?

[***Ans.*** $H_A = 128.5$ N (←),
$R_E = 328.5$ N (→),
$V_A = 296.4$ N (↑) and
$P_{max} = 173.2$ N]

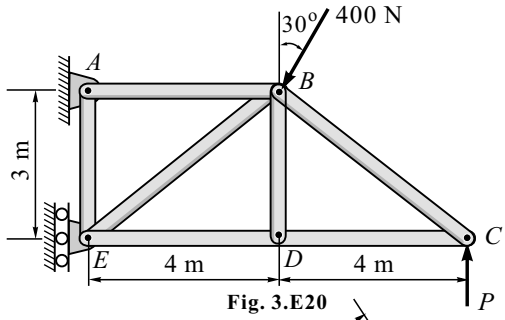

Fig. 3.E20

21. The homogeneous rod AB has a mass of m kg and is supported by the half cylinder and the floor and wall at A (Fig. 3.E21). Determine the angles made by the reactions at A and E with the horizontal when $L = 4$m, $D = 2$m and $R = 1$m.

[***Ans.*** R_E (θ) $\theta = 60^o$ and R_A (θ) $\theta = 15^o$]

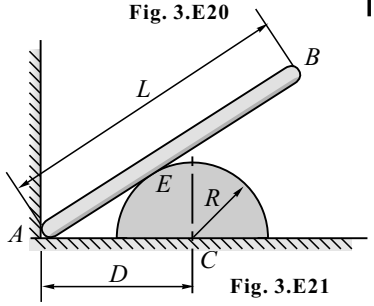

Fig. 3.E21

22. Determine the distance D in Problem 21 (Fig. 3.E22) which will cause the reaction at A to be horizontal when $L = 6$ m and $R = 1$ m and calculate the resulting angle of the reaction of the half cylinder on AB.

[***Ans.*** $D = 2.8$ m, R_E (θ) $\theta = 20.9^o$
or $D = 1.07$ m, R_E (θ) $\theta = 69.1^o$]

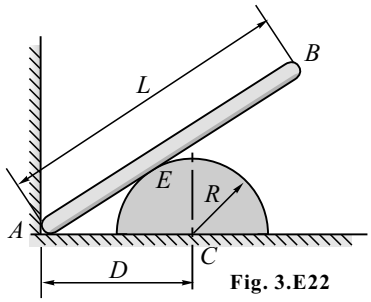

Fig. 3.E22

23. Determine the force P applied at 45° to the horizontal just necessary to start a roller 100 cm diameter over an obstruction 25 cm high, if the roller weighs 1000 N as shown in Fig. 3.E23. Also find the magnitude and direction of P when it is minimum.

[***Ans.*** (a) $P = 866.48$ N
(b) $P_{min} = 866$ N at 60° to horizontal]

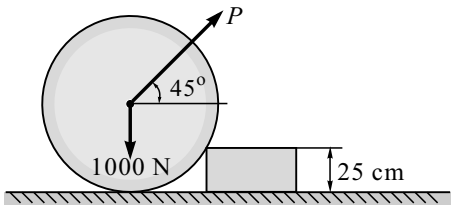

Fig. 3.E23

24. A roller of radius 400 mm, weighing 4 kN is to be pulled over a rectangular block of height 200 mm as shown in Fig. 3.E24, by a horizontal force applied at the end of a string wound round the circumference of the roller. Find the magnitude of the horizontal force P and the reaction at B, which will just turn the roller over the corner of the rectangular block. Also determine the least force and its line of action at the roller centre, for turning the roller over the rectangular block.

[***Ans.*** (a) $P = 2.31$ kN
(b) P_{min} at roller centre $= 3.46$ kN]

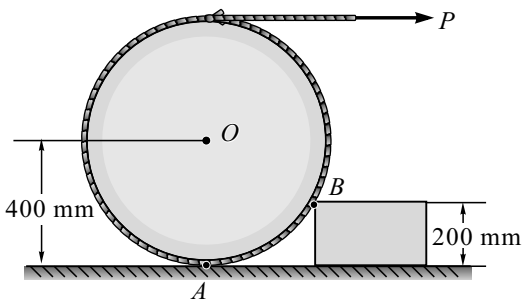

Fig. 3.E24

25. Determine the magnitude and direction of the smallest force P required to start to wheel over the block as shown in Fig. 3.E25.

[***Ans.*** $P = 9.47$ kN (θ) and
$\theta = 71.4°$]

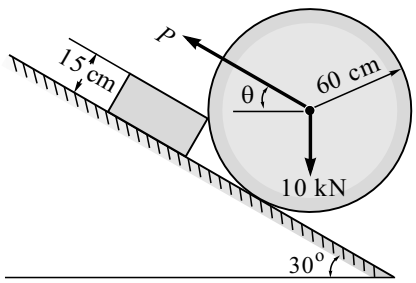

Fig. 3.E25

26. A vertical pole is anchored in a cement foundation. Three wires are attached to the pole as shown in Fig. 3.E26. If the reaction at point A consists of the reactions as shown, find the tensions in the wires.

[***Ans.*** $T_1 = 8104.6$ N,
$T_2 = 6784.3$ N, and
$T_3 = 4444.4$ N]

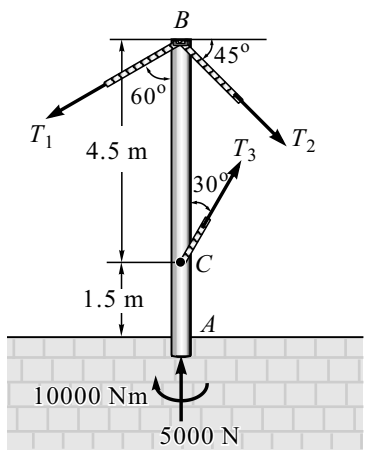

Fig. 3.E26

27. The spanner shown in Fig. 3.E27 is used to rotate a shaft. A pin fits in a hole at A, while a flat frictionless surface rests against the shaft at B. If the moment about C of the force exerted on the shaft at A is to be 87 N-m, find (a) the force P which should be exerted on the spanner at D, and (b) the corresponding value of the force exerted on the spanner at B.

[***Ans.*** $P = 240$ N and $R_B = 1768$ N $(\rightarrow)$]

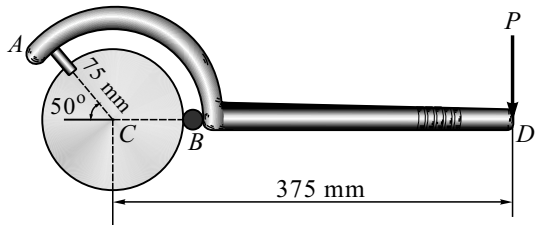

Fig. 3.E27

28. The smooth pipe rests against the wall at the points of contact A, B and, C as shown in Fig. 3.E28. Determine the reactions at these points needed to support the vertical force of 200 N. Neglect the pipe's thickness in the calculation.

[***Ans.*** $R_C = 284$ N,
$R_B = 53.1$ N, and
$R_A = 115.5$ N]

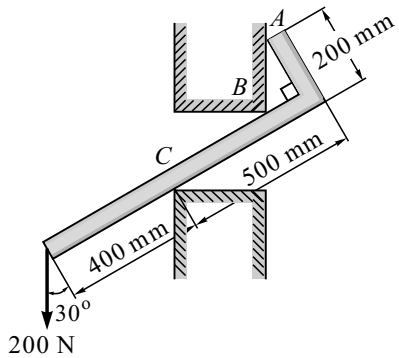

Fig. 3.E28

29. Two rollers of 50 N and 100 N weights are connected by a flexible string AB. The rollers rest on two mutually perpendicular DE and EF as shown in Fig. 3.E29. Find the tension in the string and the angle θ that it makes with the horizontal when the system is in equilibrium.

[***Ans.*** $\theta = 10.9^\circ$ and $T = 66.15$ N]

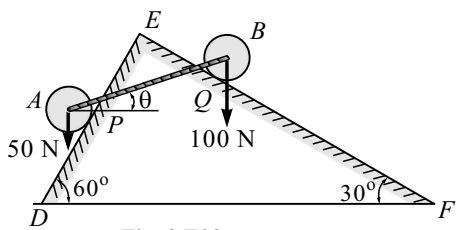

Fig. 3.E29

30. A vertical post PQ of a crane is pivoted at P and supported by a guide Q. Find the reactions at P and Q due to the loads acting as shown in Fig. 3.E30.

[***Ans.*** $R_Q = 4000$ N and $R_P = 5656.8$ N]

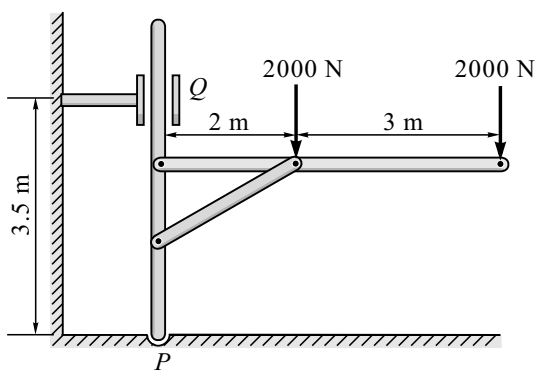

Fig. 3.E30

31. A and B are identical smooth cylinders having masses of 100 kg each as shown in Fig. 3.E31. Determine the maximum force P which can be applied without causing A to leave the floor.

[***Ans.*** $P = 1699$ N]

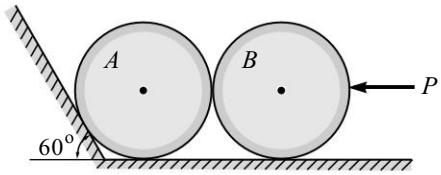

Fig. 3.E31

32. A man weighing 75 N stands on the middle rung of a 25 N ladder resting on a smooth floor and against a wall as shown in Fig. 3.E32. The ladder is prevented from slipping by a string OD. Find the tension in the string and reactions at A and B.

[***Ans.*** $R_A = 120.26$ N, $R_B = 35.13$ N, and $T = 40.56$ N]

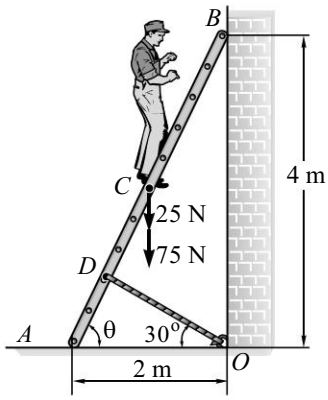

Fig. 3.E32

33. The frame BCD as shown in Fig. 3.E33 supports a 600 N cylinder. The frame is hinged at D. Determine the reactions at A, B, C and D.

[***Ans.*** $R_A = 200$ N, $R_B = 600$ N, $R_C = 200$ N, and $R_D = 632.46$ N]

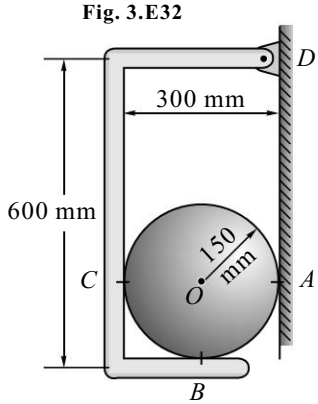

Fig. 3.E33

34. A square block of wood of mass M is hinged at A and rests on a roller at B as shown in Fig. 3.E19. It is pulled by means of a string attached at D and inclined at an angle 30° with the horizontal. Determine the force P required to be applied to string to just lift the block off the roller.

[***Ans.*** $P = 0.366\,Mg$]

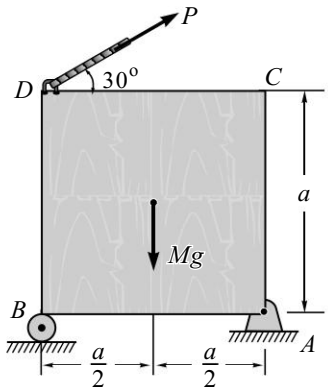

Fig. 3.E34

35. Figure 3.E35 shows several identical smooth rollers of weight W each stacked on an inclined plane. Determine (a) the maximum number of rollers which will lie in a single row as shown, and (b) all forces acting on roller A under condition (a).

[***Ans.*** (a) 6 Nos

(b) 3.11 W ($\angle\theta$) $\theta = 45^o$,

0.062 W ($\theta\angle$) $\theta = 60^o$,

2.5 W ($\theta\angle$) $\theta = 30^o$, and W (↓)]

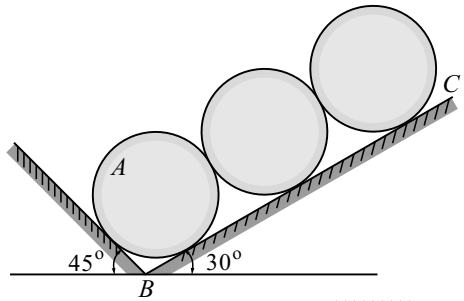

Fig. 3.E35

36. Two prismatic bar AB and CD are welded together in the form of a rigid T and are suspended in a vertical plane as shown in the Fig. 3.E36. Determine the angle θ that the bar will make with the vertical when a load of 100 N is applied at the end D. Two bars are identical and each weighing 50 N.

[***Ans.*** $\theta = 15.86^o$]

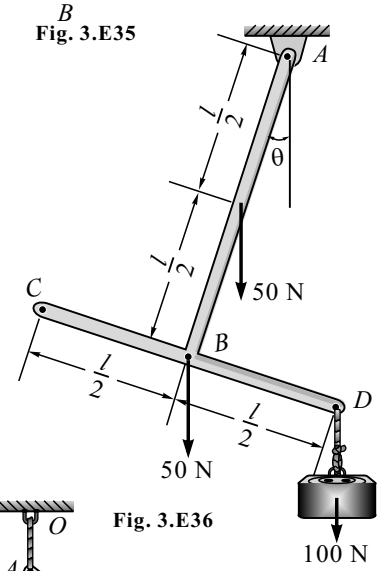

Fig. 3.E36

37. Two bars AB and BC of 1 m and 2 m length and weights 100 N and 200 N respectively, are rigidly joined at B and suspended by a string AO as shown in Fig. 3.E37. Find the inclination θ of the bar BC to the horizontal when the system is in equilibrium.

[***Ans.*** $\theta = 19.1^o$]

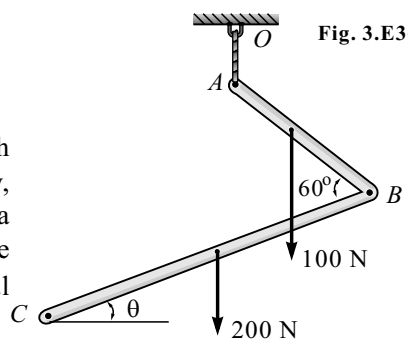

Fig. 3.E37

38. A pulley of 1 m radius, supporting a load of 500 N, is mounted at B on a horizontal beam as shown in Fig. 3.E38. If the beam weighs 200 N and pulley weighs 50 N, find the hinge force at C.

[***Ans.*** $R_C = 472$ N $\angle 32^o$]

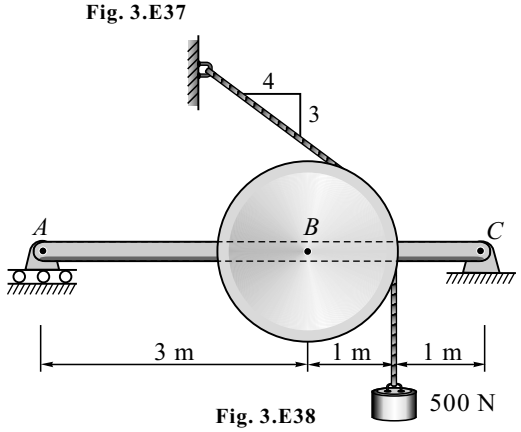

Fig. 3.E38

39. The 500 kg roller C in Fig. 3.E39 is connected to bodies A (260 kg) and B (300 kg) by ropes passing over smooth pulleys. Determine (a) the force P needed to maintain equilibrium when $\theta = 0^o$ and the corresponding reaction of the floor on C, and (b) the maximum angle θ for which equilibrium can be maintained and the corresponding magnitude of P.

[***Ans.*** (a) $P = 4120$ N ($\rightarrow$), $N = 1570$ N ($\uparrow$)
(b) $\theta = 20.9^o$; $P = 4410$ N]

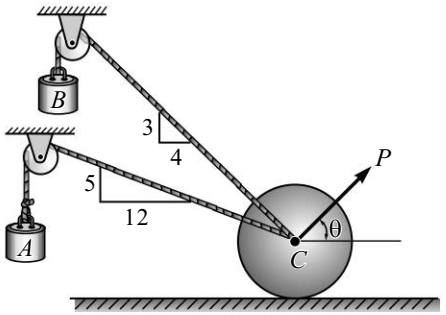

Fig. 3.E39

40. A force $P = 450$ N is applied at the point B of a weightless plate hinged at E as shown in Fig. 3.E40. Determine (a) the moment of the force P about E, (b) the horizontal force that must be applied at F for the block to be in equilibrium, and (c) the smallest force required at F to keep the block in equilibrium.

[***Ans.*** (a) 88.8 N-m (↻) (b) 395 N
(c) 280 N 45°↖]

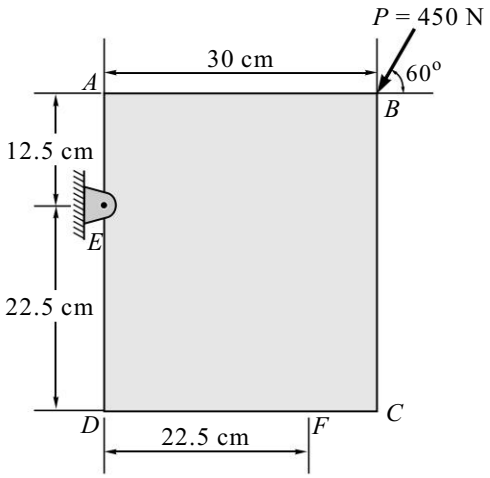

Fig. 3.E40

41. Blocks A and B of 200 kg mass and 100 kg respectively rest on a 30° inclined plane and are attached to the post which is held perpendicular to the plane by force P parallel to the plane as shown in Fig. 3.E41. Assuming all the surfaces to be smooth and the cords are parallel to the plane, determine the value of P.

[***Ans.*** $P = 487.5$ N]

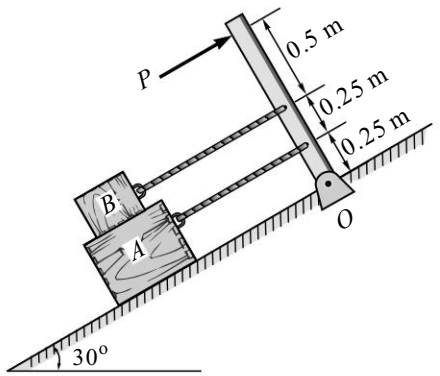

Fig. 3.E41

42. A uniform bar ABC weighs 450 N per metre length. Thickness of the wall is 35 cm. The tension in the rope is 300 N and the weight of the pulley is 120 N. Determine the reactions at the contact points A and B between the bar and the wall, if the bar is slightly loose fit inside wall.

[***Ans.*** $R_A = 13397.14$ N ($\downarrow$) and
$R_B = 15737.14$ N ($\uparrow$)]

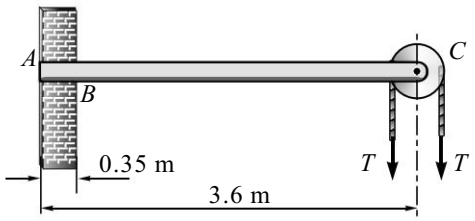

Fig. 3.E42

43. A horizontal beam AB hinged to vertical wall at A and supported by a tie rod CD subjected to the loading as shown in Fig. 3.E43. Calculate the horizontal and vertical components of the reaction at A and the tension in the tie rod.

[***Ans.*** $T = 50$ N, $H_A = 43.3$ N and $V_A = 175$ N]

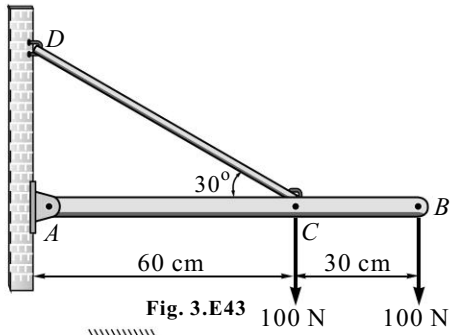

Fig. 3.E43

44. In Fig. 3.E44, a bar AB whose weight is negligible is hinged at C to another bar CD. Both A and D are hinged supports. A vertical load P is applied at B. Find the direction of reaction at A.

[***Ans.*** $\theta = 18.43^\circ$]

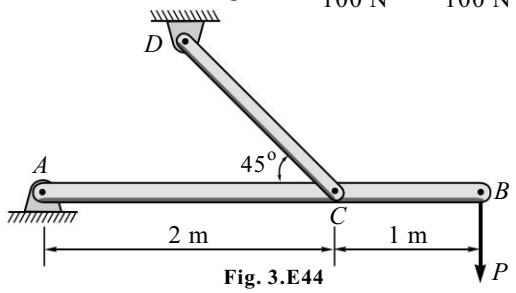

Fig. 3.E44

45. Find the reaction at A and B as shown in Fig. 3.E45.

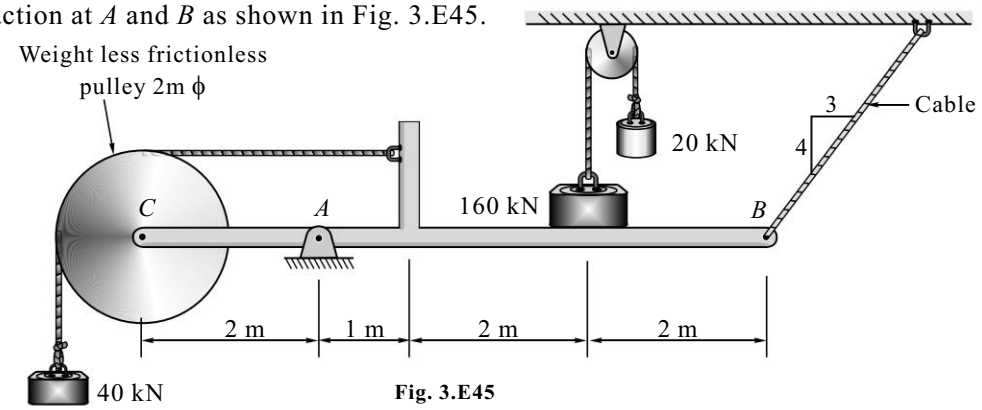

Fig. 3.E45

[***Ans.*** $R_B = 75$ kN $(\measuredangle\theta)$ $\theta = 53.13^\circ$,
$H_A = 45$ kN $(\leftarrow)$, and $V_A = 120$ kN $(\uparrow)$]

46. A beam AB weighing 1000 N is supported as shown in Fig. 3.E46. assuming all the pulleys to be frictionless, find the support reactions.

[***Ans.*** $H_A = 100$ kN $(\rightarrow)$,
$V_A = 573.21$ N $(\downarrow)$, and
$M_A = 1519.6$ N-m $(\circlearrowleft)$]

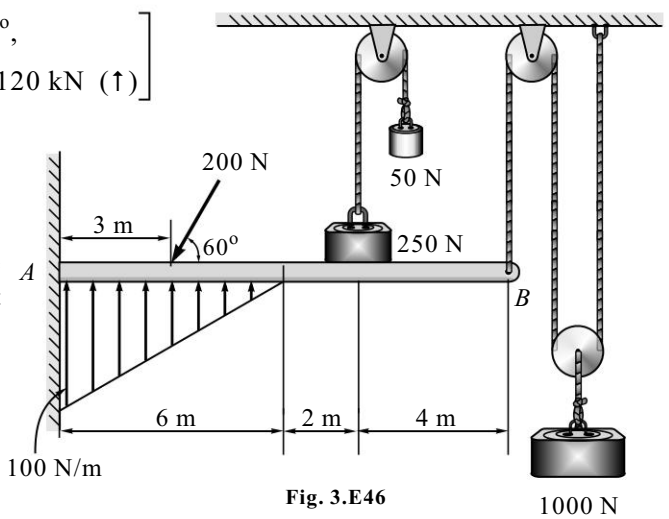

Fig. 3.E46

47. Determine the reactions at all the supports of the beam/ structure shown in Fig. 3.E47.

[***Ans.*** $V_A = 3.6$ kN (↑),
$V_D = 10.4$ kN (↑), and $H_A = 0$]

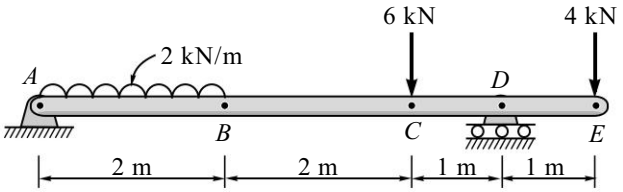

Fig. 3.E47

48. Determine the reactions at all the supports of the beam/ structure shown in Fig. 3.E48.

[***Ans.*** $R_B = 44.17$ kN (60°),
$V_A = 36.75$ kN (↑), and
$H_A = 22.1$ kN (→)]

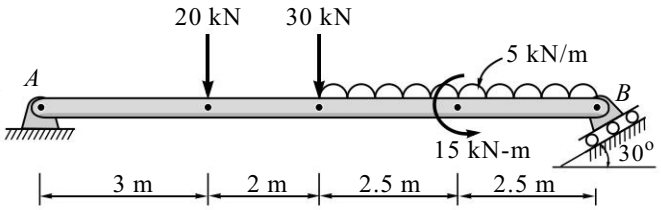

Fig. 3.E48

49. Determine the reactions at all the supports of the beam shown in Fig. 3.E49.

[***Ans.*** $H_A = 0$,
$V_A = 10.56$ kN (↑), and
$R_B = 15.44$ kN (↑)]

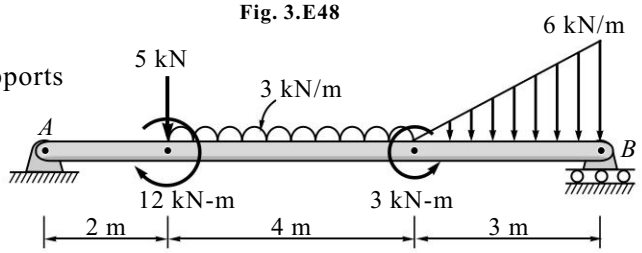

Fig. 3.E49

50. Determine the reactions at all the supports of the beam shown in Fig. 3.E50.

[***Ans.*** $H_A = 8.66$ kN (→),
$V_A = 8.79$ kN (↑), and
$V_B = 9.21$ kN (↑)]

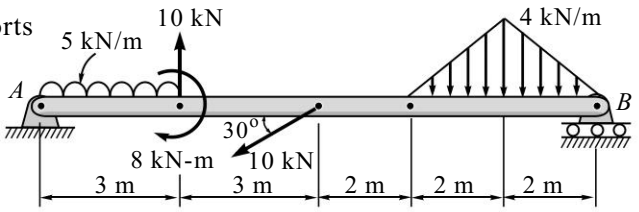

Fig. 3.E50

51. Determine the reactions at all the supports of the beam shown in Fig. 3.E51.

[***Ans.*** $H_A = 10$ kN (←),
$V_A = 127.32$ kN (↑), and
$M_A = 694.6$ kNm (↺)]

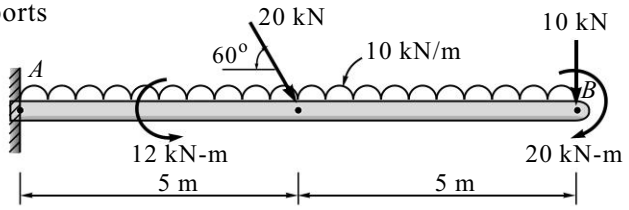

Fig. 3.E51

52. Calculate the reactions at A and B for the beam subjected to two linearly distributed loads as shown in Fig. 3.E52.

[***Ans.*** $H_A = 0$,
$V_A = 21.1$ kN (↑), and
$V_B = 20.9$ kN (↑)]

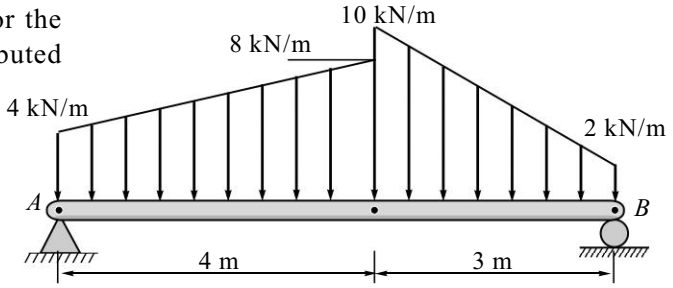

Fig. 3.E52

53. Determine the reactions at all the supports of the beam shown in Fig. 3.E53.

Ans. $R_A = 0.5$ kN (↑), $R_B = 8.5$ kN (↑), $M_C = 27$ kNm (↺), $V_C = 7$ kN (↑), and $H_C = 0$

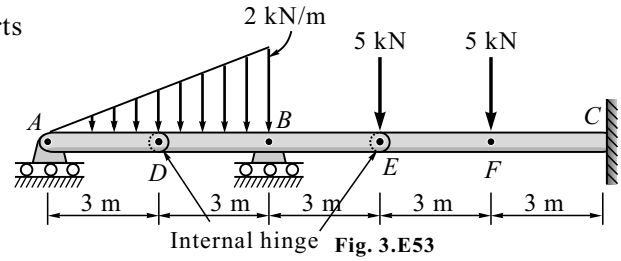

Fig. 3.E53

54. Determine the reactions at all the supports of the beam shown in Fig. 3.E54.

Ans. $V_A = 1.5$ kN (↑), $V_B = 5.5$ kN (↑), and $M_A = 14$ kNm (↻)

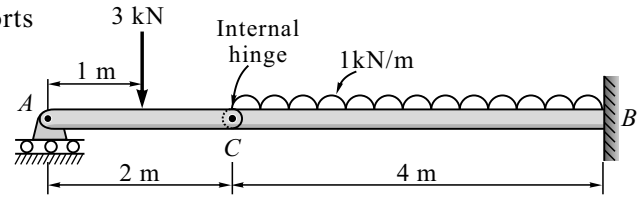

Fig. 3.E54

55. Determine the reactions at all the supports of the beam/ structure shown in Fig. 3.E55.

Ans. $V_A = 2.67$ kN (↑), $V_B = 16.65$ kN (↑), $V_C = 4.67$ kN (↑), and $H_A = 0$

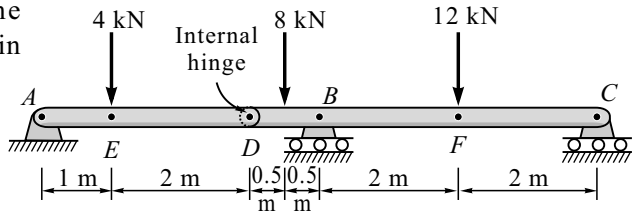

Fig. 3.E55

56. Find the supporting force system for the cantilever beams connected to bar *AB* by pins.

Ans. $R_C = 1004.5$ N (↑), $M_C = 10081$ Nm (↺), $R_D = 265.5$ kN (↑), and $M_D = 2259$ Nm (↻)

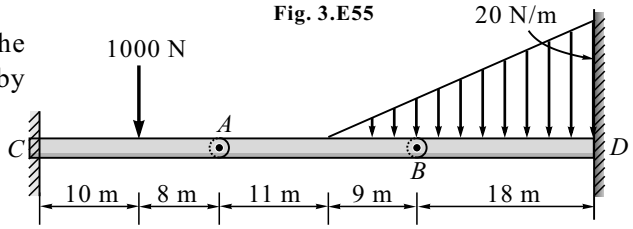

Fig. 3.E56

57. Determine the reactions at *A* for the cantilever beam shown in Fig. 3.E57.

Ans. $V_A = 4.6$ kN (↑), $H_A = 0$, and $M_A = 1.52$ kNm (↺)

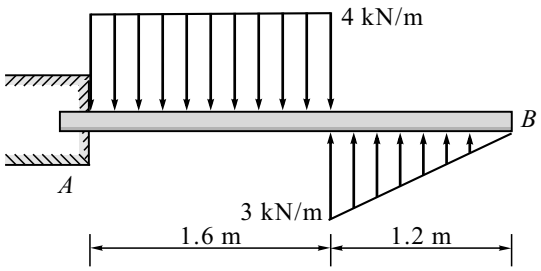

Fig. 3.E57

58. Figure 3.E58 shows beam *AB* hinged at *A* and roller supported at *B*. The L shape portion *DEF* is welded at *D* to the beam *AB*. For the loading shown, find support reactions.

Ans. $H_A = 22.98$ kN (→), $V_A = 38.3$ kN (↑), and $R_B = 25.98$ kN (↑)

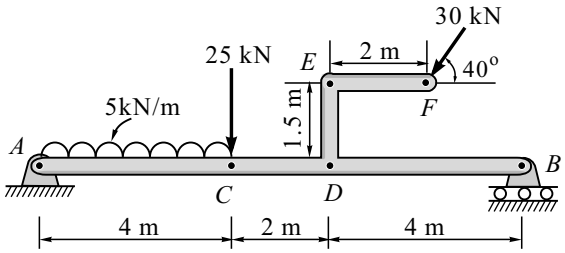

Fig. 3.E58

[II] Review Questions

1. What are the conditions of equilibrium for concurrent, parallel and general force system?
2. Describe F.B.D. and its importance in the analysis of problems.
3. Explain the types of supports and indicate the unknown reactions they offer.
4. What are the different types of loads?
5. How do you identify the two-force member in a structure?
6. Explain three-force member principle.
7. State and prove Lami's theorem.

[III] Fill in the Blanks

1. If a system is in equilibrium and acted by two forces, then these two forces must be _____ in magnitude, _____ in direction and collinear in action.
2. If three concurrent force system is in equilibrium, then the resultant of two forces should be _____ and _____ to the third force.
3. Full form of UDL is _____ and UVL is _____.
4. Fixed support is also named as _____ support.
5. Tensile force of a straight member in F.B.D. is represented by drawing an arrow _____ from joint or body.

[IV] Multiple-choice Questions

Select the appropriate answer from the given options.

1. When the resultant of force system acting on a body is zero, the body is said to be in ____.
   (a) rotating condition **(b)** translation condition
   (c) equilibrium condition **(d)** dynamic condition
2. Free body diagram represents _____.
   (a) active forces **(b)** reactive forces **(c)** geometrical dimensions **(d)** all of these
3. Principle of transmissibility is used to represent _____ effect.
   (a) internal **(b)** external **(c)** internal and external **(d)** none of these
4. Number of component of reaction at hinge support are _____.
   (a) zero **(b)** one **(c)** two **(d)** three
5. In F.B.D. a cable is always represented by _____ force.
   (a) spring **(b)** compressive **(c)** tensile **(d)** normal
6. Freely sliding guide or collar is of _____ category support.
   (a) fixed **(b)** hinge **(c)** roller **(d)** welded

7. Types of distributed load are _____.

(a) point load **(b)** uniformly distributed load

(c) uniformly varying load **(d)** both (b) and (c)

8. "If three concurrent coplanar forces acting on a body having same nature are in equilibrium, then each force is proportional to the sine of angle included between the other two forces". This is called _____.

(a) Newton's law **(b)** Parallelogram law **(c)** Varignon's theorem **(d)** Lami's theorem

9. If a member is connected to other member at its extreme end by pin and no external force or couple is acting in between its end point then such member is identified as a _____ member.

(a) one-force **(b)** two-force **(c)** three-force **(d)** four-force

10. The tension on both side of cord for frictionless and massless pulley are _____.

(a) same **(b)** different **(c)** infinite **(d)** zero

CHAPTER

4

FORCES IN SPACE

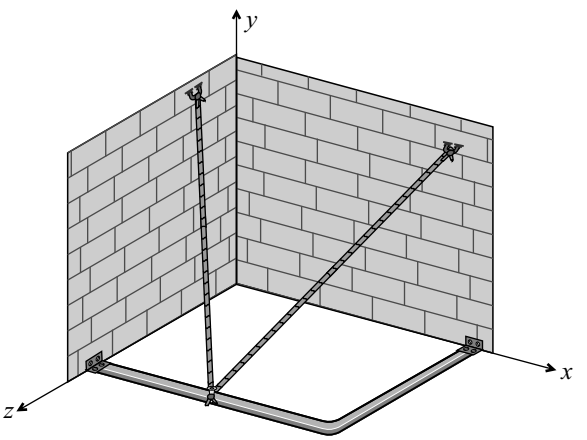

Learning Objectives

After reading this chapter, you will be able to answer the following questions:

- *How to consider the basic vector operation?*
- *How to find force vector and its angle?*
- *How to find the moment of force about a given point?*
- *How to find the moment of force about a given line?*
- *How to find the resultant of concurrent force system in space?*
- *How to find the resultant of parallel force system in space?*
- *How to find the resultant of general force system in space?*

4.1 INTRODUCTION

We know that there are two types of force systems, viz. coplanar force system and non-coplanar force system. In earlier chapters, our discussion was limited to coplanar force system where the line of action of force lies in same plane, which is a two-dimensional force system. In this chapter, we will deal with non-coplanar force systems where the line of action of force lies in different planes which forms a three-dimensional force system. Such a system is also called a *space force system*. This chapter can be effectively exercised by vector approach.

4.2 VECTORS

1. Basic Vector Operation

$$\overline{\boldsymbol{F}}_1 = x_1\,\mathbf{i} + y_1\,\mathbf{j} + z_1\,\mathbf{k}$$

$$\overline{\boldsymbol{F}}_2 = x_2\,\mathbf{i} + y_2\,\mathbf{j} + z_2\,\mathbf{k}$$

(a) *Dot Product*

$$\overline{\boldsymbol{F}}_1 \cdot \overline{\boldsymbol{F}}_2 = x_1x_2 + y_1y_2 + z_1z_2$$

(b) *Cross Product*

$$\overline{\boldsymbol{F}}_1 \times \overline{\boldsymbol{F}}_2 = \begin{vmatrix} \mathbf{i} & \mathbf{j} & \mathbf{k} \\ x_1 & y_1 & z_1 \\ x_2 & y_2 & z_2 \end{vmatrix}$$

2. Force Vector ($\overline{\boldsymbol{F}}$)

If the line of action of force (F) in space passes through $A(x_1, y_1, z_1)$ and $B(x_2, y_2, z_2)$, then find the force vector $(\overline{\boldsymbol{F}})$ by multiplying magnitude of force (F) and unit vector AB $(\overline{\boldsymbol{e}}_{AB})$:

$$\overline{\boldsymbol{F}} = (F)(\overline{\boldsymbol{e}}_{AB})$$

$$\overline{\boldsymbol{F}} = (F)\left[\frac{(x_2 - x_1)\,\mathbf{i} + (y_2 - y_1)\,\mathbf{j} + (z_2 - z_1)\,\mathbf{k}}{\sqrt{(x_2 - x_1)^2 + (y_2 - y_1)^2 + (z_2 - z_1)^2}}\right]$$

$$\overline{\boldsymbol{F}} = F_x\,\mathbf{i} + F_y\,\mathbf{j} + F_z\,\mathbf{k}$$

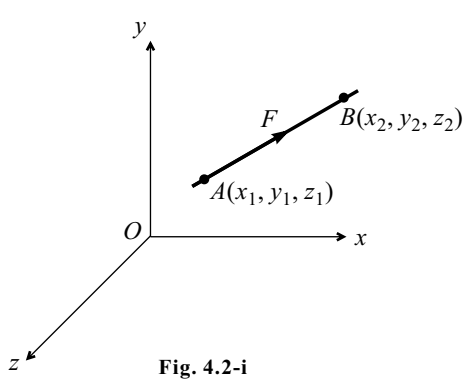

Fig. 4.2-i

Note : **i, j** and **k** printed in bold type represents unit vectors along x, y and z axis, respectively. Also all vector quantities in this entire chapter are printed in bold italic type with bar.

3. Moment Vector
(Moment of a Force About a Given Point)

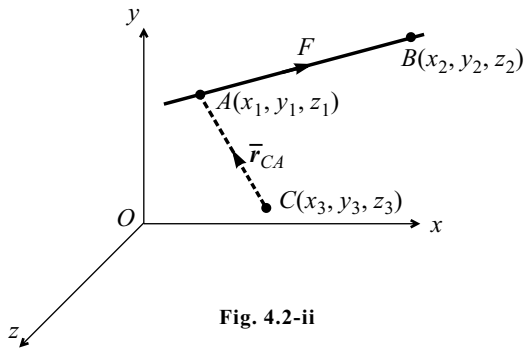

Fig. 4.2-ii

(a) Force Vector ($\bar{F}$)

Find the force vector as explained earlier.

$$\bar{F} = (F)(\bar{e}_{AB})$$

$$\bar{F} = F_x\,\mathbf{i} + F_y\,\mathbf{j} + F_z\,\mathbf{k}$$

(b) Position Vector ($\bar{r}_{CA}$)

Find the position vector $\bar{r}_{CA}$ extending from the moment centre C to any point on the line of action of force (A or B):

$$\bar{r}_{CA} = (x_1 - x_3)\,\mathbf{i} + (y_1 - y_3)\,\mathbf{j} + (z_1 - z_3)\,\mathbf{k}$$

$$\bar{r}_{CA} = x\,\mathbf{i} + y\,\mathbf{j} + z\,\mathbf{k}$$

(c) Moment Vector ($\bar{M}_C$)

Take the cross product of the position vector $\bar{r}_{CA}$ and the force vector $\bar{F}$ to obtain the moment vector $\bar{M}_C$:

$$\bar{M}_C = \bar{r}_{CA} \times \bar{F} = \begin{vmatrix} \mathbf{i} & \mathbf{j} & \mathbf{k} \\ x & y & z \\ F_x & F_y & F_z \end{vmatrix}$$

$$\bar{M}_C = M_x\,\mathbf{i} + M_y\,\mathbf{j} + M_z\,\mathbf{k}$$

where M_x, M_y and M_z are the component of $\bar{M}_C$ along x, y, and z axis, respectively.

Note : If the moment of force is required about the coordinate axis then take the moment about origin, i.e., $\bar{M}_O = M_x\,\mathbf{i} + M_y\,\mathbf{j} + M_z\,\mathbf{k}$ where M_x, M_y and M_z are the moment of the given force about x, y and z axis, respectively.

4. Vector Component of a Force Along a Given Line

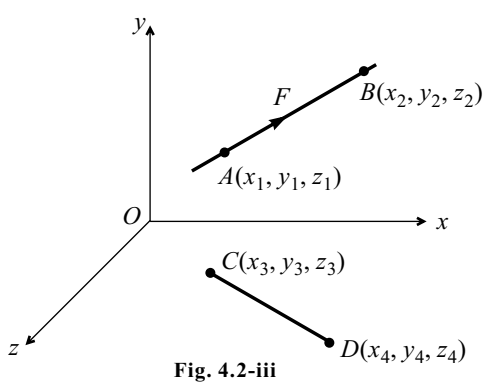

Fig. 4.2-iii

(a) Force Vector ($\bar{F}$)

$$\bar{F} = (F)(\bar{e}_{AB})$$

$$\therefore\ \bar{F} = F_x\,\mathbf{i} + F_y\,\mathbf{j} + F_z\,\mathbf{k}$$

(b) Unit Vector ($\bar{e}_{CD}$)

Find the unit vector of the given line CD along which the vector component is required.

$$\bar{e}_{CD} = \frac{(x_4 - x_3)\,\mathbf{i} + (y_4 - y_3)\,\mathbf{j} + (z_4 - z_3)\,\mathbf{k}}{\sqrt{(x_4 - x_3)^2 + (y_4 - y_3)^2 + (z_4 - z_3)^2}}$$

$$\bar{e}_{CD} = x\,\mathbf{i} + y\,\mathbf{j} + z\,\mathbf{k}$$

(c) Scalar Component (F_{CD})

Find the magnitude of a force along a given line (scalar component) by performing the dot product of force vector $\overline{\boldsymbol{F}}$ and unit vector of the given line $\overline{\boldsymbol{e}}_{CD}$

$$F_{CD} = \overline{\boldsymbol{F}} \cdot \overline{\boldsymbol{e}}_{CD}$$

(d) Vector Component ($\overline{\boldsymbol{F}}_{CD}$)

Find the vector component of a force along a given line by multiplying the scalar component F_{CD} and the unit vector of the given line $\overline{\boldsymbol{e}}_{CD}$.

$$\overline{\boldsymbol{F}}_{CD} = (F_{CD})(\overline{\boldsymbol{e}}_{CD})$$

5. Moment of a Force About a Given Line (or Axis)

(a) Force Vector ($\overline{\boldsymbol{F}}$)

$$\overline{\boldsymbol{F}} = (F)\,(\overline{\boldsymbol{e}}_{AB})$$

$$\overline{\boldsymbol{F}} = F_x\,\mathbf{i} + F_y\,\mathbf{j} + F_z\,\mathbf{k}$$

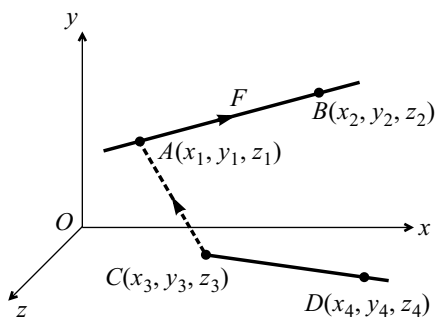

Fig. 4.2-iv

(b) Moment Vector ($\overline{\boldsymbol{M}}_C$)

Find the moment of a force about any point (C or D) on the given line as explained in **3** above.

(i) $\overline{\boldsymbol{r}}_{CA} = (x_1 - x_3)\,\mathbf{i} + (y_1 - y_3)\,\mathbf{j} + (z_1 - z_3)\,\mathbf{k}$

$$\overline{\boldsymbol{r}}_{CA} = x\,\mathbf{i} + y\,\mathbf{j} + z\,\mathbf{k}$$

(ii) $$\overline{\boldsymbol{M}}_C = \overline{\boldsymbol{r}}_{CA} \times \overline{\boldsymbol{F}} = \begin{vmatrix} \mathbf{i} & \mathbf{j} & \mathbf{k} \\ x & y & z \\ F_x & F_y & F_z \end{vmatrix}$$

$$\overline{\boldsymbol{M}}_C = M_x\,\mathbf{i} + M_y\,\mathbf{j} + M_z\,\mathbf{k}$$

(c) Unit Vector ($\overline{\boldsymbol{e}}_{CD}$)

Find the unit vector of the given line CD along which the vector component of moment is required.

$$\overline{\boldsymbol{e}}_{CD} = \frac{(x_4 - x_3)\,\mathbf{i} + (y_4 - y_3)\,\mathbf{j} + (z_4 - z_3)\,\mathbf{k}}{\sqrt{(x_4 - x_3)^2 + (y_4 - y_3)^2 + (z_4 - z_3)^2}}$$

(d) Scalar Component (M_{CD})

Find the magnitude of moment along a given line (scalar component) by multiplying the dot product of moment vector $\overline{\boldsymbol{M}}_C$ and unit vector of the given line $\overline{\boldsymbol{e}}_{CD}$.

$$M_{CD} = \overline{\boldsymbol{M}}_C \cdot \overline{\boldsymbol{e}}_{CD}$$

(e) Vector Component ($\overline{\boldsymbol{M}}_{CD}$)

Find the vector component of moment along a given line by multiplying the scalar component M_{CD} and unit vector of the given line $\overline{\boldsymbol{e}}_{CD}$.

$$\overline{\boldsymbol{M}}_{CD} = (M_{CD})(\overline{\boldsymbol{e}}_{CD})$$

6. Magnitude of Force and Direction Angles

If F is magnitude of force making an angle θ_x, θ_y, θ_z with x, y and z respectively then their components are given as follows:

$F_x = F \cos \theta_x$

$F_y = F \cos \theta_y$

$F_z = F \cos \theta_z$

Force in vector form is

$\overline{\boldsymbol{F}} = F_x \mathbf{i} + F_y \mathbf{j} + F_z \mathbf{k}$

Magnitude of force $F = \sqrt{(F_x)^2 + (F_y)^2 + (F_z)^2}$

The angle θ_x, θ_y and θ_z are known as the *force directions* and its value lies between 0 to 180°. By direction cosine rule, we have

$$\cos^2 \theta_x + \cos^2 \theta_y + \cos^2 \theta_z = 1$$

Note : If the value of force components is negative, then corresponding angle is more than 90°.

Solved Problems on Moment of a Force

Problem 1

Resolve the given force (shown in Fig. 4.1) into components along x, y and z axis and also express in vectorial form.

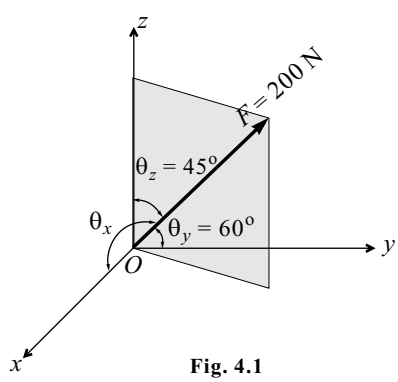

Fig. 4.1

Solution

Given magnitude of force $F = 200$ N

$\theta_y = 60°$

$\theta_z = 45°$

By direction cosine rule, we have

$\cos^2 \theta_x + \cos^2 \theta_y + \cos^2 \theta_z = 1$

$\cos^2 \theta_x + \cos^2 (60°) + \cos^2 (45°) = 1$

$\therefore \cos^2 \theta_x = 0.25$

$\therefore \cos \theta_x = \pm 0.5$

$\therefore \cos \theta_x = 0.5$ or $\cos \theta_x = -0.5$

$\therefore \theta_x = 60°$ or $\theta_x = 120°$

From Fig. 4.1, $\theta_x = 60°$ because F_x is in +ve direction.

$F_x = F \cos \theta_x$	$F_y = F \cos \theta_y$	$F_z = F \cos \theta_z$
$F_x = 200 \cos 60°$	$F_y = 200 \cos 60°$	$F_z = 200 \cos 45°$
$F_x = 100$ N	$F_y = 100$ N	$F_z = 141.42$ N

$\overline{\boldsymbol{F}} = 100 \mathbf{i} + 100 \mathbf{j} + 141.42 \mathbf{k}$

Problem 2

A force of 800 N acts along AB, $A(3, 2, -4)$ and $B(8, -5, 6)$. Write the force vector.

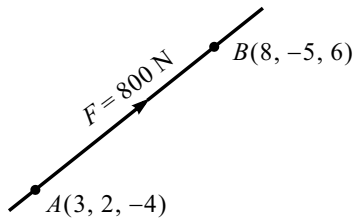

Fig. 4.2

Solution

Unit vector $\bar{\boldsymbol{e}}_{AB}$

$$\bar{\boldsymbol{e}}_{AB} = \frac{(8-3)\,\mathbf{i} + (-5-2)\,\mathbf{j} + (6-(-4))\,\mathbf{k}}{\sqrt{(5)^2 + (-7)^2 + (10)^2}}$$

$$\bar{\boldsymbol{e}}_{AB} = \frac{5\,\mathbf{i} - 7\,\mathbf{j} + 10\,\mathbf{k}}{\sqrt{174}}$$

$$\bar{\boldsymbol{F}}_{AB} = (F)(\bar{\boldsymbol{e}}_{AB}) = (800)\left(\frac{5\,\mathbf{i} - 7\,\mathbf{j} + 10\,\mathbf{k}}{\sqrt{174}}\right)$$

$$\bar{\boldsymbol{F}}_{AB} = 303.24\,\mathbf{i} - 424.54\,\mathbf{j} + 606.48\,\mathbf{k}$$

Problem 3

A force of 50 kN magnitude is acting at the point $A(2, 3, 4)$ m towards point $B(6, -2, -3)$ m. Find **(i)** Vector component of this force along the line AC. Point C is (5, 1, 2) m, and **(ii)** Moment of the given force about a point $D(-1, 1, 2)$ m.

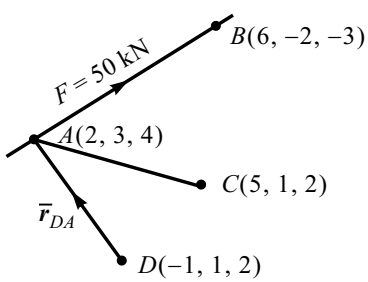

Fig. 4.3

Solution

(i) Vector component of force along the line AC ($\bar{\boldsymbol{F}}_{AC}$)

(a) Force vector ($\bar{\boldsymbol{F}}$)

$$\bar{\boldsymbol{F}} = (F)(\bar{\boldsymbol{e}}_{AB})$$

$$\bar{\boldsymbol{F}} = (50)\left(\frac{4\,\mathbf{i} - 5\,\mathbf{j} - 7\,\mathbf{k}}{\sqrt{4^2 + (-5)^2 + (-7)^2}}\right)$$

$$\bar{\boldsymbol{F}} = 21.08\,\mathbf{i} - 26.35\,\mathbf{j} - 36.89\,\mathbf{k}$$

(b) Unit vector ($\bar{\boldsymbol{e}}_{AC}$)

$$\bar{\boldsymbol{e}}_{AC} = \frac{\overline{AC}}{|\overline{AC}|} = \frac{3\,\mathbf{i} - 2\,\mathbf{j} - 2\,\mathbf{k}}{\sqrt{3^2 + 2^2 + 2^2}}$$

$$\bar{\boldsymbol{e}}_{AC} = 0.727\,\mathbf{i} - 0.485\,\mathbf{j} - 0.485\,\mathbf{k}$$

(c) Scalar component (F_{AC})
(Magnitude of force along given line AC)

$$F_{AC} = \bar{\boldsymbol{F}} \cdot \bar{\boldsymbol{e}}_{AC} \qquad \text{(Dot product)}$$

$$F_{AC} = (21.08\,\mathbf{i} - 26.35\,\mathbf{j} - 36.89\,\mathbf{k}) \cdot (0.727\,\mathbf{i} - 0.485\,\mathbf{j} - 0.485\,\mathbf{k})$$

$$F_{AC} = 44.95 \text{ kN}$$

(d) Vector component of force along the line AC ($\overline{\boldsymbol{F}}_{AC}$)

$$\overline{\boldsymbol{F}}_{AC} = (F_{AC})(\overline{\boldsymbol{e}}_{AC})$$

$$\overline{\boldsymbol{F}}_{AC} = (44.95)(0.727\,\mathbf{i} - 0.485\,\mathbf{j} - 0.485\,\mathbf{k})$$

$$\overline{\boldsymbol{F}}_{AC} = 33.44\,\mathbf{i} - 22.31\,\mathbf{j} - 22.31\,\mathbf{k}\ \text{(kN)}$$

(ii) Moment of $\overline{\boldsymbol{F}}$ about a point D ($\overline{\boldsymbol{M}}_D$)

(a) Position vector ($\overline{\boldsymbol{r}}_{DA}$)

$$\overline{\boldsymbol{r}}_{DA} = \overline{DA}$$

$$\overline{\boldsymbol{r}}_{DA} = 3\,\mathbf{i} + 2\,\mathbf{j} + 2\,\mathbf{k}$$

(b) Force vector ($\overline{\boldsymbol{F}}$)

$$\overline{\boldsymbol{F}} = 21.08\,\mathbf{i} - 26.35\,\mathbf{j} - 36.89\,\mathbf{k}$$

(c) Moment of $\overline{\boldsymbol{F}}$ about a point D ($\overline{\boldsymbol{M}}_D$)

$$\overline{\boldsymbol{M}}_D = \overline{\boldsymbol{r}}_{DA} \times \overline{\boldsymbol{F}} \quad \text{(cross product)}$$

$$\overline{\boldsymbol{M}}_D = \begin{vmatrix} \mathbf{i} & \mathbf{j} & \mathbf{k} \\ 3 & 2 & 2 \\ 21.08 & -26.35 & -36.89 \end{vmatrix}$$

$$\overline{\boldsymbol{M}}_D = -21.08\,\mathbf{i} + 152.83\,\mathbf{j} - 121.21\,\mathbf{k}\ \text{(kN-m)}$$

Problem 4

A force $\overline{\boldsymbol{F}} = (3\,\mathbf{i} - 4\,\mathbf{j} + 12\,\mathbf{k})$ N acts at a point A, whose coordinates are (1, –2, 3) m. Find **(i)** Moment of the force about the origin. **(ii)** Moment of the force about the point B(2, 1, 2) m. **(iii)** The vector component of the force $\overline{\boldsymbol{F}}$ along line AB and the moment of this force about the origin.

Solution

(i) Moment of $\overline{\boldsymbol{F}}$ about the origin O ($\overline{\boldsymbol{M}}_O$)

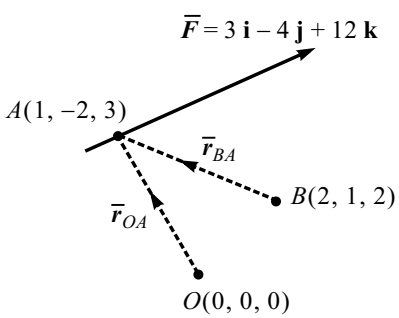

Fig. 4.4

(a) Position vector ($\overline{\boldsymbol{r}}_{OA}$)

$$\overline{\boldsymbol{r}}_{OA} = \overline{OA}$$

$$\overline{\boldsymbol{r}}_{OA} = \mathbf{i} - 2\,\mathbf{j} + 3\,\mathbf{k}$$

(b) Force vector ($\overline{\boldsymbol{F}}$)

$$\overline{\boldsymbol{F}} = 3\,\mathbf{i} - 4\,\mathbf{j} + 12\,\mathbf{k}$$

(c) Moment vector ($\overline{\boldsymbol{M}}_O$)

$$\overline{\boldsymbol{M}}_O = \overline{\boldsymbol{r}}_{OA} \times \overline{\boldsymbol{F}} \quad \text{(cross product)}$$

$$\overline{M}_O = \begin{vmatrix} \mathbf{i} & \mathbf{j} & \mathbf{k} \\ 1 & -2 & 3 \\ 3 & -4 & 12 \end{vmatrix}$$

$$\overline{M}_O = -12\,\mathbf{i} - 3\,\mathbf{j} + 2\,\mathbf{k} \text{ (N-m)}$$

(ii) Moment of $\overline{F}$ about the point B ($\overline{M}_B$)

(a) Position vector ($\overline{r}_{BA}$)

$$\overline{r}_{BA} = \overline{BA}$$

$$\overline{r}_{BA} = -\mathbf{i} - 3\,\mathbf{j} + \mathbf{k}$$

(b) Force vector ($\overline{F}$)

$$\overline{F} = 3\,\mathbf{i} - 4\,\mathbf{j} + 12\,\mathbf{k}$$

(c) Moment vector ($\overline{M}_B$)

$$\overline{M}_B = \overline{r}_{BA} \times \overline{F} \quad \text{(cross product)}$$

$$\overline{M}_B = \begin{vmatrix} \mathbf{i} & \mathbf{j} & \mathbf{k} \\ -1 & -3 & 1 \\ 3 & -4 & 12 \end{vmatrix}$$

$$\overline{M}_B = -32\,\mathbf{i} + 15\,\mathbf{j} + 13\,\mathbf{k} \text{ (N-m)}$$

(iii) (I) Vector component of force $\overline{F}$ along the line AB ($\overline{F}_{AB}$)

(a) Unit vector ($\overline{e}_{AB}$)

$$\overline{e}_{AB} = \frac{\overline{AB}}{|\overline{AB}|} = \frac{\mathbf{i} + 3\,\mathbf{j} - \mathbf{k}}{\sqrt{1^2 + 3^2 + 1^2}}$$

$$\overline{e}_{AB} = 0.3015\,\mathbf{i} + 0.9045\,\mathbf{j} - 0.3015\,\mathbf{k}$$

(b) Scalar component of $\overline{F}$ along the line AB (F_{AB})

$$F_{AB} = \overline{F} \cdot \overline{e}_{AB} \quad \text{(dot product)}$$

$$F_{AB} = (3\,\mathbf{i} - 4\,\mathbf{j} + 12\,\mathbf{k}) \cdot (0.3015\,\mathbf{i} + 0.9045\,\mathbf{j} - 0.3015\,\mathbf{k})$$

$$F_{AB} = -6.3315 \text{ N}$$

(c) Vector component of $\overline{F}$ along the line AB ($\overline{F}_{AB}$)

$$\overline{F}_{AB} = (F_{AB})(\overline{e}_{AB})$$

$$\overline{F}_{AB} = (-6.3315)(0.3015\,\mathbf{i} + 0.9045\,\mathbf{j} - 0.3015\,\mathbf{k})$$

$$\overline{F}_{AB} = -1.909\,\mathbf{i} - 5.727\,\mathbf{j} + 1.909\,\mathbf{k}$$

(II) Moment of $\overline{F}_{AB}$ about the origin O $(\overline{M}_O)_{AB}$

$$(\overline{M}_O)_{AB} = \overline{r}_{OA} \times \overline{F}_{AB} \quad \text{(cross product)}$$

$$(\overline{M}_O)_{AB} = \begin{vmatrix} \mathbf{i} & \mathbf{j} & \mathbf{k} \\ 1 & -2 & 3 \\ -1.909 & -5.727 & 1.909 \end{vmatrix}$$

$$(\overline{M}_O)_{AB} = 13.363\,\mathbf{i} - 7.636\,\mathbf{j} - 9.545\,\mathbf{k} \quad \text{(N-m)}$$

Problem 5

A 500 N force passes through points whose position vectors are $\overline{r}_1 = 10\,\mathbf{i} - 3\,\mathbf{j} + 12\,\mathbf{k}$ and $\overline{r}_2 = 3\,\mathbf{i} - 2\,\mathbf{j} + 5\,\mathbf{k}$. What is the moment of this force about a line in the xy plane, passing through the origin and inclined at an angle of 30° with the x-axis ?

Solution

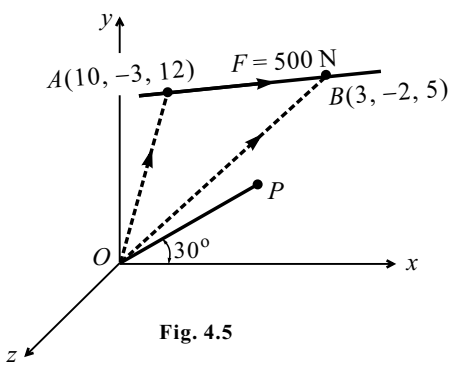

Fig. 4.5

(i) Position vector

$$\overline{r}_1 = \overline{OA} = 10\,\mathbf{i} - 3\,\mathbf{j} + 12\,\mathbf{k}$$

$$\overline{r}_2 = \overline{OB} = 3\,\mathbf{i} - 2\,\mathbf{j} + 5\,\mathbf{k}$$

$\therefore$ coordinate of point $A(10, -3, 12)$ and $B(3, -2, 5)$.

(ii) Force vector $(\overline{F})$

$$\overline{F} = (500)(\overline{e}_{AB})$$

$$\overline{F} = (500)\left(\frac{-7\,\mathbf{i} + \mathbf{j} - 7\,\mathbf{k}}{\sqrt{7^2 + 1^2 + 7^2}}\right)$$

$$\overline{F} = -351.76\,\mathbf{i} + 50.25\,\mathbf{j} - 351.76\,\mathbf{k}$$

(iii) Moment of $(\overline{F})$ about the origin O $(\overline{M}_O)$

$$\overline{M}_O = \overline{r}_1 \times \overline{F} \quad \text{(cross product)}$$

$$\overline{M}_O = \begin{vmatrix} \mathbf{i} & \mathbf{j} & \mathbf{k} \\ 10 & -3 & 12 \\ -351.76 & 50.25 & -351.76 \end{vmatrix}$$

$$\overline{M}_O = 452.28\,\mathbf{i} - 703.52\,\mathbf{j} - 552.78\,\mathbf{k}$$

(iv) Unit vector $(\overline{e}_{OP})$

$$\overline{e}_{OP} = (\cos 30^o)\,\mathbf{i} + (\cos 60^o)\,\mathbf{j} + (\cos 90^o)\,\mathbf{k}$$

(v) Scalar component (M_{OP})

(Magnitude of moment of force about the given line OP)

$$M_{OP} = \overline{M}_O \cdot \overline{e}_{OP} \quad \text{(dot product)}$$

$M_{OP} = (452.28\,\mathbf{i} - 703.52\,\mathbf{j} - 552.78\,\mathbf{k}) \cdot (0.866\,\mathbf{i} + 0.5\,\mathbf{j} + 0\,\mathbf{k})$

$M_{OP} = 39.91$ (N-m)

(vi) Vector component ($\overline{\boldsymbol{M}}_{OP}$)

(Moment of force about the given line *OP* in vector form)

$\overline{\boldsymbol{M}}_{OP} = (M_{OP})\,(\overline{\boldsymbol{e}}_{OP})$

$\overline{\boldsymbol{M}}_{OP} = (39.91)(0.866\,\mathbf{i} + 0.5\,\mathbf{j})$

$\overline{\boldsymbol{M}}_{OP} = 34.56\,\mathbf{i} + 19.96\,\mathbf{j}$ (N-m)

Problem 6

The rectangular platform *OCDE* is hinged to a vertical wall at *A* and *B* and supported by a cable which passes over a smooth hook at *F*. (Refer to Fig. 4.6). If the tension in the cable is 355 N, find the moment about each of the coordinate axes of the force exerted by the cable at *D*.

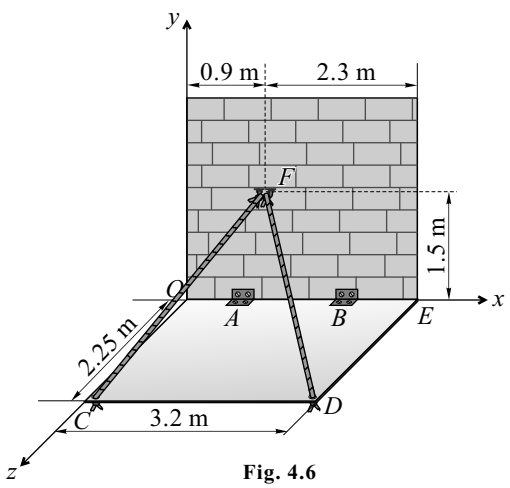

Fig. 4.6

Solution

(i) Coordinates

$O(0, 0, 0)$, $D(3.2, 0, 2.25)$, $F(0.9, 1.5, 0)$

(ii) Force vector

$\overline{\boldsymbol{F}} = (355)(\overline{\boldsymbol{e}}_{DF})$

$$\overline{\boldsymbol{F}} = (355)\left[\frac{-2.3\,\mathbf{i} + 1.5\,\mathbf{j} - 2.25\,\mathbf{k}}{\sqrt{2.3^2 + 1.5^2 + 2.25^2}}\right]$$

$\overline{\boldsymbol{F}} = -230\,\mathbf{i} + 150\,\mathbf{j} - 225\,\mathbf{k}$

(iii) Position vector

$\overline{\boldsymbol{r}}_{OD} = 3.2\,\mathbf{i} + 2.25\,\mathbf{k}$

(iv) Moment vector

$$\overline{\boldsymbol{M}}_O = \overline{\boldsymbol{r}}_{OD} \times \overline{\boldsymbol{F}} = \begin{vmatrix} \mathbf{i} & \mathbf{j} & \mathbf{k} \\ 3.2 & 0 & 2.25 \\ -230 & 150 & -225 \end{vmatrix}$$

$\overline{\boldsymbol{M}}_O = -337.5\,\mathbf{i} + 202.5\,\mathbf{j} + 480\,\mathbf{k}$ (N-m)

(v) Moments of the force exerted by cable at point *D* about the coordinate axis are as follows:

$M_x = -337.5$ (N-m)

$M_y = 202.5$ (N-m)

$M_z = 480$ (N-m)

Problem 7

A tension T of 15 kN magnitude is applied to the cable AB attached to the top A of the rigid mass and secured to the ground at B. Determine the moment M of tension T about z-axis passing through the base O. Refer Fig. 4.7.

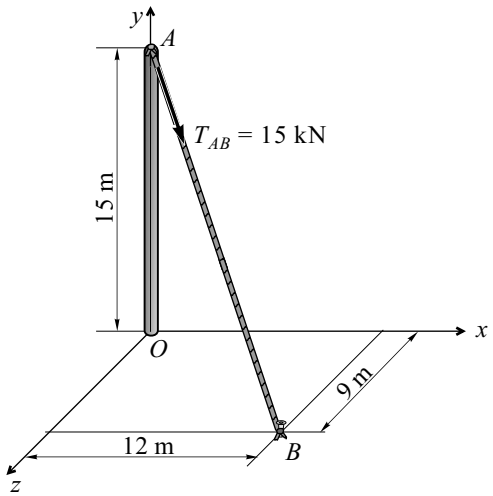

Fig. 4.7

Solution

(i) Coordinates

$O(0, 0, 0)$, $A(0, 15, 0)$, $B(12, 0, 9)$

(ii) Force vector ($\overline{\boldsymbol{T}}_{AB}$)

$$\overline{\boldsymbol{T}}_{AB} = (15)(\overline{\boldsymbol{e}}_{AB})$$

$$= (15)\left[\frac{(12-0)\,\mathbf{i} + (0-15)\,\mathbf{j} + (5-0)\,\mathbf{k}}{\sqrt{12^2 + (-15)^2 + 5^2}}\right]$$

$$\overline{\boldsymbol{T}}_{AB} = 9.07\,\mathbf{i} - 11.335\,\mathbf{j} + 6.801\,\mathbf{k} \text{ (kN)}$$

(iii) Moment of the force $\overline{\boldsymbol{T}}_{AB}$ about z-axis ($\overline{\boldsymbol{M}}_O$)

$$\overline{\boldsymbol{M}}_O = \overline{\boldsymbol{r}}_{OA} \times \overline{\boldsymbol{T}}_{AB} = \begin{vmatrix} \mathbf{i} & \mathbf{j} & \mathbf{k} \\ 0 & 15 & 0 \\ 9.07 & -11.335 & 6.801 \end{vmatrix}$$

$$\overline{\boldsymbol{M}}_O = 102.02\,\mathbf{i} - 0\,\mathbf{j} - 136.05\,\mathbf{k}$$

(iv) Moment of the force about the z-axis

$$\overline{\boldsymbol{M}}_O \cdot \overline{\boldsymbol{e}}_{z\text{-axis}} = (102.02\,\mathbf{i} - 0\,\mathbf{j} - 136.05\,\mathbf{k}) \cdot (\mathbf{k})$$

$$= -136.05 \text{ kN-m}$$

Problem 8

A force acts at the origin in a direction defined by the angle $\theta_y = 65^\circ$ and $\theta_z = 40^\circ$. Knowing that the x-component of the force is -750 kN, determine **(i)** the value of θ_x, **(ii)** magnitude of the force, and **(iii)** the other component.

Solution

(i) By direction cosine rule, we have

$$\cos^2\theta_x + \cos^2\theta_y + \cos^2\theta_z = 1$$

$$\cos^2\theta_x + \cos^2 65^\circ + \cos^2 40^\circ = 1$$

$$\cos^2\theta_x = 0.234$$

Consider the negative value because $\overline{\boldsymbol{F}}_x = -750$ kN is negative

$$\cos\theta_x = -0.484$$

$$\therefore\ \theta_x = 118.95^\circ$$

(ii) x-component of a force (F_x)

$F_x = F \cos \theta_x$

$-750 = F \cos 118.95^o$

$F = 1549.44$ kN

(iii) $F_y = F \cos \theta_y$

$F_y = 1549.44 \cos 65^o$

$F_y = 654.82$ kN

$F_z = F \cos \theta_z$

$F_z = 1549.44 \cos 40^o$

$F_z = 1186.94$ kN

Problem 9

A force of 5 kN is acting along AB, where position vector of point A is $\bar{\boldsymbol{r}}_A = (2\,\mathbf{i} + 3\,\mathbf{j} - 5\,\mathbf{k})$ m; $\bar{\boldsymbol{r}}_B = (5\,\mathbf{j} - 3\,\mathbf{k})$ m. Another force acting at point B = 6 kN and it makes 30° and 75° with x and y axes. Find **(i)** resultant of the two forces, **(ii)** component of resultant along line BD where coordinates of D are (3, 2, –1) m, and **(iii)** moment of the resultant about line CD where coordinate of C are (–2, 5, 0) m.

Solution

(i) Resultant of the two forces

(a) Coordinates

$A(2, 3, -5)$ m, $B(0, 5, -3)$ m

(b) Force vector ($\bar{\boldsymbol{F}}_1$)

Magnitude $F_1 = 5$ kN

$$\bar{\boldsymbol{F}}_1 = (5)(\bar{\boldsymbol{e}}_{AB})$$

$$\bar{\boldsymbol{F}}_1 = (5)\left[\frac{-2\,\mathbf{i} + 2\,\mathbf{j} + 2\,\mathbf{k}}{\sqrt{2^2 + 2^2 + 2^2}}\right]$$

$$\bar{\boldsymbol{F}}_1 = -2.89\,\mathbf{i} + 2.89\,\mathbf{j} + 2.89\,\mathbf{k}$$

(c) Force vector ($\bar{\boldsymbol{F}}_2$)

Magnitude $F_2 = 6$ kN ; $\theta_x = 30^o$, $\theta_y = 75^o$

By direction cosine rule, we have

$$\cos \theta_z = +\sqrt{1 - \cos^2 \theta_x - \cos^2 \theta_y}$$

$$\therefore\ \theta_z = 64.67^o$$

$$\bar{\boldsymbol{F}}_2 = (6)\left[(\cos 30^o)\,\mathbf{i} + (\cos 75^o)\,\mathbf{j} + (\cos 64.67^o)\,\mathbf{k}\right]$$

$$\bar{\boldsymbol{F}}_2 = 5.196\,\mathbf{i} + 1.553\,\mathbf{j} + 2.567\,\mathbf{k}$$

(d) Resultant force vector

$$\bar{\boldsymbol{R}} = \bar{\boldsymbol{F}}_1 + \bar{\boldsymbol{F}}_2$$

$$\bar{\boldsymbol{R}} = 2.306\,\mathbf{i} + 4.443\,\mathbf{j} + 5.457\,\mathbf{k}\ \text{(kN)}$$

(ii) Component of resultant along line *BD* (R_{BD})

(a) Coordinates

$B(0, 5, -3)$ m , $D(3, 2, 1)$ m

(b) Unit vector ($\bar{e}_{BD}$)

$$\bar{e}_{BD} = \frac{\overline{BD}}{|\overline{BD}|} = \frac{3\,\mathbf{i} - 3\,\mathbf{j} + 4\,\mathbf{k}}{\sqrt{3^2 + 3^2 + 4^2}}$$

$$\bar{e}_{BD} = 0.514\,\mathbf{i} - 0.514\,\mathbf{j} + 0.686\,\mathbf{k}$$

(c) Scalar component (R_{BD})

$$R_{BD} = \bar{R} \cdot \bar{e}_{BD} \quad \text{(dot product)}$$

$$R_{BD} = (2.306\,\mathbf{i} + 4.443\,\mathbf{j} + 5.457\,\mathbf{k}) \cdot (0.514\,\mathbf{i} - 0.514\,\mathbf{j} + 0.686\,\mathbf{k})$$

$$R_{BD} = 2.645 \text{ kN}$$

(iii) Moment of resultant about line *CD* (M_{CD})

(a) Coordinates

$B(0, 5, -3)$ m ,$C(-2, 5, 0)$ m , $D(3, 2, 1)$ m

(b) Moment vector ($\overline{M}_C$)

Resultant force vector

$$\bar{R} = 2.306\,\mathbf{i} + 4.443\,\mathbf{j} + 5.457\,\mathbf{k}$$

Position vector

$$\bar{r}_{CB} = \overline{CB} = 2\,\mathbf{i} + 0\,\mathbf{j} - 3\,\mathbf{k}$$

$$\overline{M}_C = \bar{r}_{CB} \times \bar{R} = \begin{vmatrix} \mathbf{i} & \mathbf{j} & \mathbf{k} \\ 2 & 0 & -3 \\ 2.306 & 4.44 & 5.457 \end{vmatrix}$$

$$\overline{M}_C = 13.32\,\mathbf{i} - 17.818\,\mathbf{j} + 8.88\,\mathbf{k}$$

(c) Unit vector ($\bar{e}_{CD}$)

$$\bar{e}_{CD} = \frac{\overline{CD}}{|\overline{CD}|} = \frac{5\,\mathbf{i} - 3\,\mathbf{j} + \mathbf{k}}{\sqrt{5^2 + 3^2 + 1^2}}$$

$$\bar{e}_{BD} = 0.845\,\mathbf{i} - 0.507\,\mathbf{j} + 0.169\,\mathbf{k}$$

(d) Moment of resultant about line CD (M_{CD})

$$M_{CD} = \overline{M}_C \cdot \bar{e}_{CD} \quad \text{(dot product)}$$

$$M_{CD} = (13.32\,\mathbf{i} - 17.818\,\mathbf{j} + 8.88\,\mathbf{k}) \cdot (0.845\,\mathbf{i} - 0.507\,\mathbf{j} + 0.169\,\mathbf{k})$$

$$M_{CD} = 21.79 \text{ kN-m}$$

4.3 RESULTANT OF CONCURRENT FORCE SYSTEM IN SPACE

Resultant of concurrent force system in space is a single force $\overline{\boldsymbol{R}}$ and it acts through point of concurrency.

Refer to the given figure where $\overline{\boldsymbol{F}}_1$, $\overline{\boldsymbol{F}}_2$, $\overline{\boldsymbol{F}}_3$, $\overline{\boldsymbol{F}}_4$, $\overline{\boldsymbol{F}}_5$ are the force vectors passing through point A.

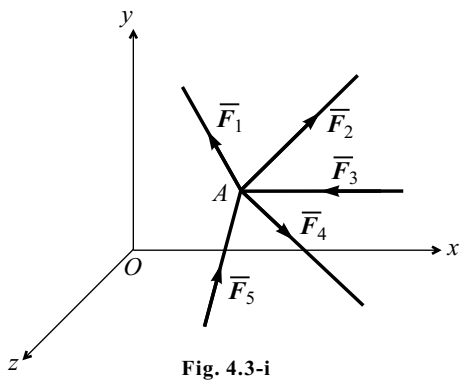

Fig. 4.3-i

Resultant force vector $\overline{\boldsymbol{R}}$ is the summation of all force vectors.

$$\overline{\boldsymbol{R}} = \overline{\boldsymbol{F}}_1 + \overline{\boldsymbol{F}}_2 + \overline{\boldsymbol{F}}_3 + \overline{\boldsymbol{F}}_4 + \overline{\boldsymbol{F}}_5$$

$$\overline{\boldsymbol{R}} = (\Sigma F_x)\,\mathbf{i} + (\Sigma F_y)\,\mathbf{j} + (\Sigma F_z)\,\mathbf{k}$$

$$\overline{\boldsymbol{R}} = R_x\,\mathbf{i} + R_y\,\mathbf{j} + R_z\,\mathbf{k}$$

Magnitude of resultant $R = \sqrt{R_x^2 + R_y^2 + R_z^2}$

Directions

$$\theta_x = \cos^{-1}\left(\frac{R_x}{R}\right)$$

$$\theta_y = \cos^{-1}\left(\frac{R_y}{R}\right)$$

$$\theta_z = \cos^{-1}\left(\frac{R_z}{R}\right)$$

Note :
- If resultant is acting along x-axis then $R_x = \Sigma F_x = R$
  $R_y = \Sigma F_y = 0$ and $R_z = \Sigma F_z = 0$
- If resultant is acting along y-axis then $R_y = \Sigma F_y = R$
  $R_x = \Sigma F_x = 0$ and $R_z = \Sigma F_z = 0$
- If resultant is acting along z-axis then $R_z = \Sigma F_z = R$
  $R_x = \Sigma F_x = 0$ and $R_y = \Sigma F_y = 0$

Problem 10

The lines of actions of three forces concurrent at the origin O passes respectively through points A, B, C having coordinates

$x_a = 1$	$y_a = +2$	$z_a = +4$
$x_b = +3$	$y_b = 0$	$z_b = -3$
$x_c = +2$	$y_c = -2$	$z_c = +4$

The magnitude of the forces are $F_a = 40$ N, $F_b = 10$ N and $F_c = 30$ N. Find the magnitude and direction of their resultant.

Solution

(i) Force vectors

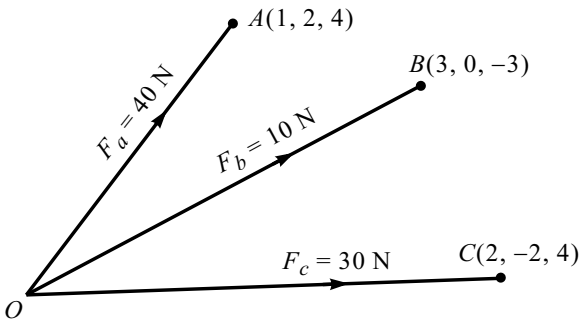

Fig. 4.10

$$\overline{\boldsymbol{F}}_a = (F_a)(\overline{\boldsymbol{e}}_{OA})$$

$$= (40)\left[\frac{\mathbf{i} + 2\,\mathbf{j} + 4\,\mathbf{k}}{\sqrt{1^2 + 2^2 + 4^2}}\right]$$

$$\overline{\boldsymbol{F}}_a = 8.73(\,\mathbf{i} + 2\,\mathbf{j} + 4\,\mathbf{k})$$

$$\overline{\boldsymbol{F}}_a = 8.73\,\mathbf{i} + 17.46\,\mathbf{j} + 34.92\,\mathbf{k}$$

$$\overline{\boldsymbol{F}}_b = (F_b)(\overline{\boldsymbol{e}}_{OB})$$

$$\overline{\boldsymbol{F}}_b = (10)\left[\frac{3\,\mathbf{i} + 0\,\mathbf{j} - 3\,\mathbf{k}}{\sqrt{3^2 + 0^2 + 3^2}}\right]$$

$$\overline{\boldsymbol{F}}_b = 2.36(3\,\mathbf{i} + 0\,\mathbf{j} - 3\,\mathbf{k})$$

$$\overline{\boldsymbol{F}}_b = 7.08\,\mathbf{i} + 0\,\mathbf{j} - 7.08\,\mathbf{k}$$

$$\overline{\boldsymbol{F}}_c = (F_c)(\overline{\boldsymbol{e}}_{OC})$$

$$\overline{\boldsymbol{F}}_c = (30)\left[\frac{2\,\mathbf{i} - 2\,\mathbf{j} + 4\,\mathbf{k}}{\sqrt{2^2 + 2^2 + 4^2}}\right]$$

$$\overline{\boldsymbol{F}}_c = 6.12(2\,\mathbf{i} - 2\,\mathbf{j} + 4\,\mathbf{k})$$

$$\overline{\boldsymbol{F}}_c = 12.24\,\mathbf{i} - 12.24\,\mathbf{j} + 24.48\,\mathbf{k}$$

(ii) Resultant vector

$$\overline{\boldsymbol{R}} = \overline{\boldsymbol{F}}_a + \overline{\boldsymbol{F}}_b + \overline{\boldsymbol{F}}_c$$

$$\overline{\boldsymbol{R}} = (8.73 + 7.08 + 12.24)\,\mathbf{i} + (17.46 + 0 - 12.24)\,\mathbf{j} + (34.92 - 7.08 + 24.48)\,\mathbf{k}$$

$$\overline{\boldsymbol{R}} = 28.05\,\mathbf{i} + 5.22\,\mathbf{j} + 53.32\,\mathbf{k}$$

(iii) Magnitude of the resultant

$$R = \sqrt{(28.05)^2 + (5.22)^2 + (53.32)^2}$$

$$R = 59.59 \text{ N}$$

(iv) Directions of R_x, R_y and R_z

We know for $\overline{\boldsymbol{R}} = R_x\,\mathbf{i} + R_y\,\mathbf{j} + R_z\,\mathbf{k}$

$$\theta_x = \cos^{-1}\left(\frac{R_x}{R}\right) \qquad \theta_y = \cos^{-1}\left(\frac{R_y}{R}\right) \qquad \theta_z = \cos^{-1}\left(\frac{R_z}{R}\right)$$

$$\theta_x = \cos^{-1}\left(\frac{28.05}{59.59}\right) \qquad \theta_y = \cos^{-1}\left(\frac{5.22}{59.59}\right) \qquad \theta_z = \cos^{-1}\left(\frac{53.32}{59.59}\right)$$

$$\theta_x = 61.92^\circ \qquad \theta_y = 84.97^\circ \qquad \theta_z = 26.52^\circ$$

Problem 11

Knowing that the tension in AC is, T_{AC} = 20 kN, determine the required values of tensions T_{AB} and T_{AD} so that the resultant of the three forces applied at A is vertical and calculate resultant.

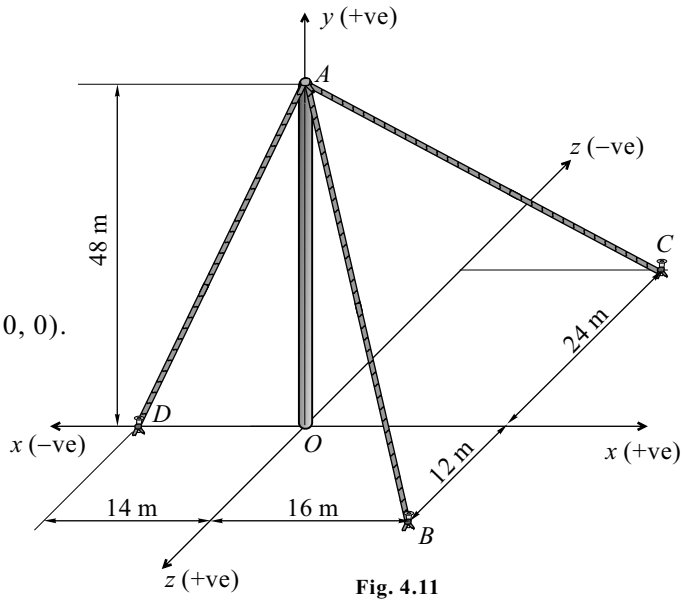

Fig. 4.11

Solution

(i) Coordinate $O(0, 0, 0)$, $A(0, 48, 0)$, $B(16, 0, 12)$, $C(16, 0, -24)$, $D(-14, 0, 0)$.

(ii) Force vector

$$\overline{\boldsymbol{T}}_{AC} = (T_{AC})(\overline{\boldsymbol{e}}_{AC})$$

$$= (20)\left[\frac{16\,\mathbf{i} - 48\,\mathbf{j} - 24\,\mathbf{k}}{\sqrt{16^2 + 48^2 + 24^2}}\right]$$

$$\overline{\boldsymbol{T}}_{AC} = \frac{20(16\,\mathbf{i} - 48\,\mathbf{j} - 24\,\mathbf{k})}{\sqrt{3136}}$$

$$\overline{\boldsymbol{T}}_{AC} = 5.712\,\mathbf{i} - 17.136\,\mathbf{j} - 8.568\,\mathbf{k} \qquad \text{... (I)}$$

$$\overline{\boldsymbol{T}}_{AB} = (T_{AB})(\overline{\boldsymbol{e}}_{AB})$$

$$\overline{\boldsymbol{T}}_{AB} = (T_{AB})\left[\frac{-16\,\mathbf{i} - 48\,\mathbf{j} + 12\,\mathbf{k}}{\sqrt{16^2 + 48^2 + 12^2}}\right] = \frac{T_{AB}}{52}(16\,\mathbf{i} - 48\,\mathbf{j} + 12\,\mathbf{k})$$

$$\overline{\boldsymbol{T}}_{AB} = T_{AB}(0.308\,\mathbf{i} - 0.923\,\mathbf{j} + 0.231\,\mathbf{k}) \qquad \text{... (II)}$$

$$\overline{\boldsymbol{T}}_{AD} = (T_{AD})(\overline{\boldsymbol{e}}_{AD})$$

$$\overline{\boldsymbol{T}}_{AD} = (T_{AD})\left[\frac{-14\,\mathbf{i} - 48\,\mathbf{j} + 0\,\mathbf{k}}{\sqrt{14^2 + 48^2 + 0^2}}\right] = \frac{T_{AD}}{50}(-14\,\mathbf{i} - 48\,\mathbf{j} + 0\,\mathbf{k})$$

$$\overline{\boldsymbol{T}}_{AD} = T_{AD}(-0.28\,\mathbf{i} - 0.96\,\mathbf{j} + 0\,\mathbf{k}) \qquad \text{... (III)}$$

(iii) Since the resultant is along y-axis

$\therefore\ \Sigma F_z = 0$ and $\Sigma F_x = 0$

(iv) For $\Sigma F_z = 0$; add **k** terms of Eqs. (I), (II) and (III)

$-8.568 + 0.231\,T_{AB} + 0 = 0 \qquad \therefore\ T_{AB} = 37.09$ kN

(v) For $\Sigma F_x = 0$; add **i** terms of Eqs. (I), (II) and (III)

$5.712 + 0.308\,T_{AB} + (-0.28)\,T_{AD} = 0 \qquad \therefore\ T_{AD} = 61.12$ kN

(vi) Resultant $R = \Sigma F_y$; add **j** terms of Eqs. (I), (II) and (III)

$R = -17.136 + (-0.923)\,T_{AB} + (-0.96)\,T_{AD} = -17.136 - 0.923 \times 37.09 - 0.96 \times 61.12$

$R = -110.05$ kN; $\qquad \therefore\ R = 110.05$ kN $(\downarrow)$

Problem 12

The resultant of the three concurrent space forces at A is $\overline{\boldsymbol{R}} = (-788\ \mathbf{j})$ N. Find the magnitude of F_1, F_2 and F_3 forces. Refer to Fig. 4.12.

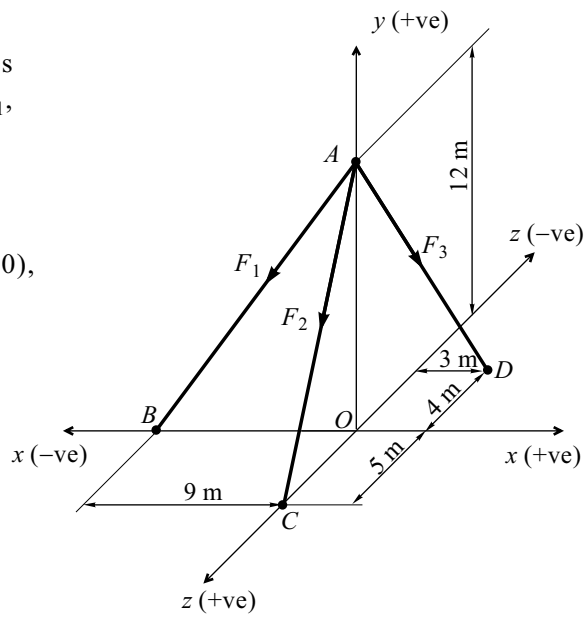

Fig. 4.12

Solution

(i) Coordinate $O(0, 0, 0)$, $A(0, 12, 0)$, $B(-9, 0, 0)$, $C(0, 0, 5)$, $D(3, 0, -4)$.

(ii) Force vector

$$\overline{\boldsymbol{F}}_1 = (F_1)(\overline{\boldsymbol{e}}_{AB})$$

$$\overline{\boldsymbol{F}}_1 = (F_1)\left[\frac{-9\ \mathbf{i} - 12\ \mathbf{j} + 0\ \mathbf{k}}{\sqrt{9^2 + 12^2 + 0^2}}\right]$$

$$\overline{\boldsymbol{F}}_1 = (F_1)(-0.6\ \mathbf{i} - 0.8\ \mathbf{j})$$

$$\overline{\boldsymbol{F}}_2 = (F_2)(\overline{\boldsymbol{e}}_{AC})$$

$$\overline{\boldsymbol{F}}_2 = (F_2)\left[\frac{0\ \mathbf{i} - 12\ \mathbf{j} + 5\ \mathbf{k}}{\sqrt{0^2 + 12^2 + 5^2}}\right]$$

$$\overline{\boldsymbol{F}}_2 = (F_2)(0\ \mathbf{i} - 0.923\ \mathbf{j} + 0.385\ \mathbf{k})$$

$$\overline{\boldsymbol{F}}_3 = (F_3)(\overline{\boldsymbol{e}}_{AD})$$

$$\overline{\boldsymbol{F}}_3 = (F_3)\left[\frac{3\ \mathbf{i} - 12\ \mathbf{j} - 4\ \mathbf{k}}{\sqrt{3^2 + 12^2 + 4^2}}\right]$$

$$\overline{\boldsymbol{F}}_3 = (F_3)(0.231\ \mathbf{i} - 0.923\ \mathbf{j} - 0.308\ \mathbf{k})$$

(iii) Resultant $\overline{\boldsymbol{R}} = -788\ \mathbf{j}$ (Given)

We know for concurrent force system resultant is given by

$$\overline{\boldsymbol{R}} = \overline{\boldsymbol{F}}_1 + \overline{\boldsymbol{F}}_2 + \overline{\boldsymbol{F}}_3$$

$$-788\ \mathbf{j} = (F_1)(-0.6\ \mathbf{i} - 0.8\ \mathbf{j}) + (F_2)(-0.923\ \mathbf{j} + 0.385\ \mathbf{k}) + (F_3)(0.231\ \mathbf{i} - 0.923\ \mathbf{j} - 0.308\ \mathbf{k})$$

(iv) Equating **i** and **k** to zero and **j** = −788, we get

$$-0.6\ F_1 + 0.23\ F_3 = 0 \qquad \text{... (I)}$$

$$-0.8\ F_1 - 0.923\ F_2 - 0.923\ F_3 = -788 \qquad \text{... (II)}$$

$$0.385\ F_2 - 0.308\ F_3 = 0 \qquad \text{... (III)}$$

Solving Eqs. (I), (II) and (III), we get

$F_1 = 154$ N, $F_2 = 320$ N, $F_3 = 400$ N

4.4 RESULTANT OF A PARALLEL FORCE SYSTEM IN SPACE

Resultant of a parallel force system is a single force $\overline{\boldsymbol{R}}$ and it acts parallel to the line of action of forces.

1. Write all the forces in vector form and add them.

$$\overline{\boldsymbol{R}} = \Sigma\, \overline{\boldsymbol{F}} = \overline{\boldsymbol{F}}_1 + \overline{\boldsymbol{F}}_2 + \overline{\boldsymbol{F}}_3 + \ldots..$$

2. Take moments of all forces about the origin and add them.

$$\Sigma\, \overline{\boldsymbol{M}}_O = \overline{\boldsymbol{M}}_1 + \overline{\boldsymbol{M}}_2 + \overline{\boldsymbol{M}}_3 + \ldots..$$

3. Find moment of resultant about origin O.

$$(\overline{\boldsymbol{M}}_O)_R$$

4. Applying Varignon's theorem,

$$\Sigma\, \overline{\boldsymbol{M}}_O = (\overline{\boldsymbol{M}}_O)_R$$

Procedure

1. Coordinates

2. Force vectors $\overline{\boldsymbol{F}}_1, \overline{\boldsymbol{F}}_2, \overline{\boldsymbol{F}}_3, \ldots..$

3. Position vectors $\overline{r}_1, \overline{r}_2, \overline{r}_3, \ldots..$

4. Moment vectors $\overline{\boldsymbol{M}}_1, \overline{\boldsymbol{M}}_2, \overline{\boldsymbol{M}}_3, \ldots..$

5. Resultant force vector $\overline{\boldsymbol{R}} = \overline{\boldsymbol{F}}_1 + \overline{\boldsymbol{F}}_2 + \overline{\boldsymbol{F}}_3 + \ldots..$

6. Resultant moment vector

(a) Algebraic sum of moment of forces about origin ($\Sigma\, \overline{\boldsymbol{M}}_O$)

$$\Sigma\, \overline{\boldsymbol{M}}_O = \overline{\boldsymbol{M}}_1 + \overline{\boldsymbol{M}}_2 + \overline{\boldsymbol{M}}_3 + \ldots.. + \overline{\boldsymbol{C}}_1 + \overline{\boldsymbol{C}}_2 + \overline{\boldsymbol{C}}_3 + \ldots..$$

(b) Moment of resultant force about origin ($\overline{\boldsymbol{M}}_R$)

$$\overline{\boldsymbol{M}}_R = \overline{\boldsymbol{r}}_{OP} \times \overline{\boldsymbol{R}}$$ (where P is the point through which resultant acts)

7. Varignon's theorem

$$\Sigma\, \overline{\boldsymbol{M}}_O = \overline{\boldsymbol{M}}_R$$

Solved Problems on a Parallel Force System in Space

Problem 13

Five vertical forces are acting on a horizontal plate as shown in Fig. 4.13(a). Find the resultant of the forces and point of application w.r.t. origin.

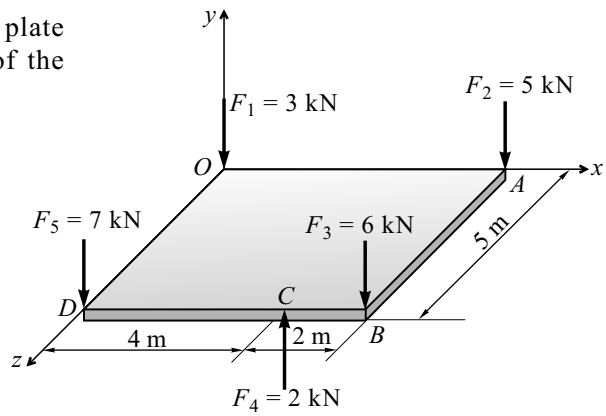

Fig. 4.13(a)

Solution

Method I

(i) Coordinates $O(0, 0, 0)$; $A(6, 0, 0)$; $B(6, 0, 5)$; $C(4, 0, 5)$; $D(0, 0, 5)$.

(ii) Force vector

$\overline{\boldsymbol{F}}_1 = -3\,\mathbf{j}$; $\overline{\boldsymbol{F}}_2 = -5\,\mathbf{j}$; $\overline{\boldsymbol{F}}_3 = -6\,\mathbf{j}$;

$\overline{\boldsymbol{F}}_4 = 2\,\mathbf{j}$; $\overline{\boldsymbol{F}}_5 = -7\,\mathbf{j}$.

(iii) Position vector

$\overline{\boldsymbol{r}}_1 = 0$; $\overline{\boldsymbol{r}}_2 = \overline{OA} = 6\,\mathbf{i}$; $\overline{\boldsymbol{r}}_3 = \overline{OB} = 6\,\mathbf{i} + 5\,\mathbf{z}$;

$\overline{\boldsymbol{r}}_4 = \overline{OC} = 4\,\mathbf{i} + 5\mathbf{z}$.

(iv) Moment vectors

$$\overline{\boldsymbol{M}}_1 = \overline{\boldsymbol{r}}_1 \times \overline{\boldsymbol{F}}_1$$

$$\overline{\boldsymbol{M}}_1 = \begin{vmatrix} \mathbf{i} & \mathbf{j} & \mathbf{k} \\ 0 & 0 & 0 \\ 0 & -3 & 0 \end{vmatrix}$$

$$\overline{\boldsymbol{M}}_1 = 0$$

$$\overline{\boldsymbol{M}}_2 = \overline{\boldsymbol{r}}_2 \times \overline{\boldsymbol{F}}_2$$

$$\overline{\boldsymbol{M}}_2 = \begin{vmatrix} \mathbf{i} & \mathbf{j} & \mathbf{k} \\ 6 & 0 & 0 \\ 0 & -5 & 0 \end{vmatrix}$$

$$\overline{\boldsymbol{M}}_2 = -30\,\mathbf{k}$$

$$\overline{\boldsymbol{M}}_3 = \overline{\boldsymbol{r}}_3 \times \overline{\boldsymbol{F}}_3$$

$$\overline{\boldsymbol{M}}_3 = \begin{vmatrix} \mathbf{i} & \mathbf{j} & \mathbf{k} \\ 6 & 0 & 5 \\ 0 & -6 & 0 \end{vmatrix}$$

$$\overline{\boldsymbol{M}}_3 = 30\,\mathbf{i} - 36\,\mathbf{k}$$

$$\overline{\boldsymbol{M}}_4 = \overline{\boldsymbol{r}}_4 \times \overline{\boldsymbol{F}}_4$$

$$\overline{\boldsymbol{M}}_4 = \begin{vmatrix} \mathbf{i} & \mathbf{j} & \mathbf{k} \\ 4 & 0 & 5 \\ 0 & 2 & 0 \end{vmatrix}$$

$$\overline{\boldsymbol{M}}_4 = -10\,\mathbf{i} + 8\,\mathbf{k}$$

$$\overline{\boldsymbol{M}}_5 = \overline{\boldsymbol{r}}_5 \times \overline{\boldsymbol{F}}_5$$

$$\overline{\boldsymbol{M}}_5 = \begin{vmatrix} \mathbf{i} & \mathbf{j} & \mathbf{k} \\ 0 & 0 & 5 \\ 0 & -7 & 0 \end{vmatrix}$$

$$\overline{\boldsymbol{M}}_5 = 35\,\mathbf{i}$$

(v) Resultant force vector

$$\overline{\boldsymbol{R}} = \overline{\boldsymbol{F}}_1 + \overline{\boldsymbol{F}}_2 + \overline{\boldsymbol{F}}_3 + \overline{\boldsymbol{F}}_4 + \overline{\boldsymbol{F}}_5$$

$$\overline{\boldsymbol{R}} = -3\,\mathbf{j} - 5\,\mathbf{j} - 6\,\mathbf{j} + 2\,\mathbf{j} - 7\,\mathbf{j}$$

$$\overline{\boldsymbol{R}} = -19\,\mathbf{j} \text{ (kN)}$$

(vi) Resultant moment vector

(a) Algebraic sum of moment of forces about origin ($\Sigma\, \overline{\boldsymbol{M}}_O$)

$$\Sigma\, \overline{\boldsymbol{M}}_O = \overline{\boldsymbol{M}}_1 + \overline{\boldsymbol{M}}_2 + \overline{\boldsymbol{M}}_3 + \overline{\boldsymbol{M}}_4 + \overline{\boldsymbol{M}}_5$$

$$\Sigma\, \overline{\boldsymbol{M}}_O = 0 - 30\,\mathbf{k} + 30\,\mathbf{i} - 36\,\mathbf{k} - 10\,\mathbf{i} + 8\,\mathbf{k} + 35\,\mathbf{j}$$

$$\Sigma\, \overline{\boldsymbol{M}}_O = 55\,\mathbf{i} - 58\,\mathbf{k} \quad \text{(kN-m)}$$

(b) Moment of resultant force about origin ($\overline{\boldsymbol{M}}_R$)

Let the resultant act at a point $P(x, 0, z)$ in the x-z plane

$$\overline{\boldsymbol{M}}_R = \overline{\boldsymbol{r}}_{OP} \times \overline{\boldsymbol{R}} = \begin{vmatrix} \mathbf{i} & \mathbf{j} & \mathbf{k} \\ x & 0 & z \\ 0 & -19 & 0 \end{vmatrix}$$

$$\overline{\boldsymbol{M}}_R = 19\,z\,\mathbf{i} - 19\,x\,\mathbf{k}$$

(vii) Applying Varignon's theorem,

$$\Sigma\, \overline{\boldsymbol{M}}_O = \overline{\boldsymbol{M}}_R$$

$$55\,\mathbf{i} - 58\,\mathbf{k} = 19\,z\,\mathbf{i} - 19\,x\,\mathbf{k}$$

Equating the coefficients, we have

$19\,z = 55 \qquad -19\,x = -58$

$\therefore\ z = 2.89$ m $\qquad x = 3.05$ m

(viii) Resultant and its point of application w.r.t. origin

$\overline{\boldsymbol{R}} = -19\,\mathbf{j}$ (kN) acts at point $P(3.05, 0, 2.89)$ m

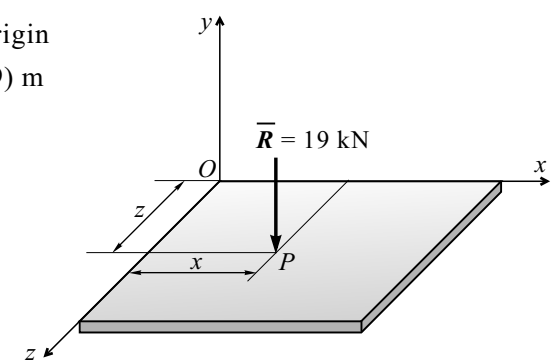

Fig. 4.13(b)

Method II

(i) Resultant force (R)

$R = -3 - 5 - 6 + 2 - 7$

$R = -19$ kN (↓)

(ii) Taking moment about x-axis and applying Varignon's theorem,

$\Sigma\, M_x = R \times z$

$(-3)(0) + (-5)(0) + (-6)(5) + (2)(5) + (-7)(5) = (-19)(z)$

$\therefore\ z = 2.89$ m

(iii) Taking moment about z-axis and applying Varignon's theorem,

$\Sigma\, M_z = R \times x$

$(-3)(0) + (-5)(6) + (-6)(6) + (2)(4) + (-7)(0) = (-19)(x)$

$\therefore\ x = 3.05$ m

(iv) Resultant and its point of application w.r.t. origin

$\overline{\boldsymbol{R}} = -19\,\mathbf{j}$ (kN) acts at point $P(3.05, 0, 2.89)$ m

Problem 14

Replace the given force system (Fig. 4.14) by a force and a couple.

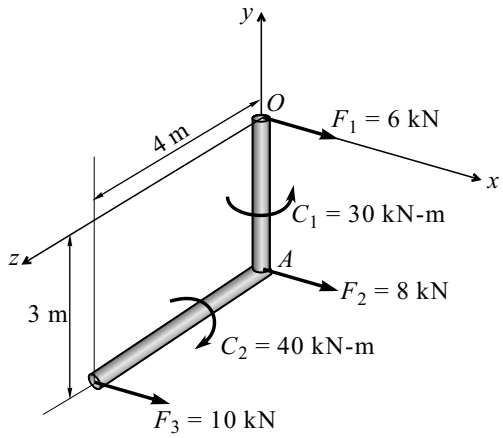

Fig. 4.14

Solution

Method I

(i) Coordinates $O(0, 0, 0)$; $A(0, -3, 0)$; $B(0, -3, 4)$.

(ii) Force vector

$$\overline{\boldsymbol{F}}_1 = 6\,\mathbf{i};\ \overline{\boldsymbol{F}}_2 = 8\,\mathbf{i};\ \overline{\boldsymbol{F}}_3 = 10\,\mathbf{i}.$$

(iii) Position vector

$$\overline{\boldsymbol{r}}_1 = 0\ ;\ \overline{\boldsymbol{r}}_2 = \overline{OA} = -3\,\mathbf{j}\ ;$$

$$\overline{\boldsymbol{r}}_3 = \overline{OB} = -3\,\mathbf{j} + 4\,\mathbf{k}.$$

(iv) Moment vectors

$$\overline{\boldsymbol{M}}_1 = \overline{\boldsymbol{r}}_1 \times \overline{\boldsymbol{F}}_1$$

$$\overline{\boldsymbol{M}}_1 = 0$$

$$\overline{\boldsymbol{M}}_2 = \overline{\boldsymbol{r}}_2 \times \overline{\boldsymbol{F}}_2$$

$$\overline{\boldsymbol{M}}_2 = \begin{vmatrix} \mathbf{i} & \mathbf{j} & \mathbf{k} \\ 0 & -3 & 0 \\ 8 & 0 & 0 \end{vmatrix}$$

$$\overline{\boldsymbol{M}}_2 = 24\,\mathbf{k}$$

$$\overline{\boldsymbol{M}}_3 = \overline{\boldsymbol{r}}_3 \times \overline{\boldsymbol{F}}_3$$

$$\overline{\boldsymbol{M}}_3 = \begin{vmatrix} \mathbf{i} & \mathbf{j} & \mathbf{k} \\ 0 & -3 & 4 \\ 10 & 0 & 0 \end{vmatrix}$$

$$\overline{\boldsymbol{M}}_3 = 40\,\mathbf{j} + 30\,\mathbf{k}$$

(v) Couple vectors

$$\overline{\boldsymbol{C}}_1 = (30)(\overline{\boldsymbol{e}}_{AO})$$

$$\overline{\boldsymbol{C}}_1 = (30)\left[\frac{3\,\mathbf{j}}{\sqrt{3^2}}\right]$$

$$\overline{\boldsymbol{C}}_1 = 30\,\mathbf{j}$$

$$\overline{\boldsymbol{C}}_2 = (40)(\overline{\boldsymbol{e}}_{BA})$$

$$\overline{\boldsymbol{C}}_2 = (40)\left[\frac{-4\,\mathbf{k}}{\sqrt{4^2}}\right]$$

$$\overline{\boldsymbol{C}}_2 = -40\,\mathbf{k}$$

(Direction of couple is taken by the right-hand-thumb rule)

(vi) Resultant force vector

$$\overline{\boldsymbol{R}} = \overline{\boldsymbol{F}}_1 + \overline{\boldsymbol{F}}_2 + \overline{\boldsymbol{F}}_3$$

$$\overline{\boldsymbol{R}} = 6\,\mathbf{i} + 8\,\mathbf{i} + 10\,\mathbf{i}$$

$$\overline{\boldsymbol{R}} = 24\,\mathbf{i}\ \text{(kN)}$$

(vii) Resultant couple vector

(a) Algebraic sum of moment of forces about origin ($\Sigma\, \overline{\boldsymbol{M}}_O$)

$$\Sigma\, \overline{\boldsymbol{M}}_O = \overline{\boldsymbol{M}}_1 + \overline{\boldsymbol{M}}_2 + \overline{\boldsymbol{M}}_3 + \overline{\boldsymbol{M}}_4 + \overline{\boldsymbol{M}}_5$$

$$\Sigma\, \overline{\boldsymbol{M}}_O = 0 + (24\,\mathbf{k}) + (40\,\mathbf{j} + 30\,\mathbf{k}) + (30\,\mathbf{j}) + (-40\,\mathbf{k})$$

$$\Sigma\, \overline{\boldsymbol{M}}_O = 70\,\mathbf{j} + 14\,\mathbf{k} \quad \text{(kN-m)}$$

(b) Moment of resultant force about origin ($\overline{\boldsymbol{M}}_R$)

Let the resultant act at a point $P(0, y, z)$ in the y-z plane

$$\overline{\boldsymbol{M}}_R = \overline{\boldsymbol{r}}_{OP} \times \overline{\boldsymbol{R}} = \begin{vmatrix} \mathbf{i} & \mathbf{j} & \mathbf{k} \\ 0 & y & z \\ 24 & 0 & 0 \end{vmatrix}$$

$$\overline{\boldsymbol{M}}_R = 24\,z\,\mathbf{j} - 24\,y\,\mathbf{k}$$

(viii) Applying Varignon's theorem,

$$\Sigma\, \overline{\boldsymbol{M}}_O = \overline{\boldsymbol{M}}_R$$

$$70\,\mathbf{j} + 14\,\mathbf{k} = 24\,z\,\mathbf{j} - 24\,y\,\mathbf{k}$$

Equating the coefficients, we have

$70 = 24\,z$	$14 = -24\,y$
$\therefore\ z = 2.917$ m	$y = -0.583$ m

(viii) Resultant and its points of application w.r.t. origin

$\overline{\boldsymbol{R}} = 24\,\mathbf{j}$ (kN) acts at point $P(0, -0.58, 2.917)$ m

Method II

(i) Resultant force (R)

$$R = 6 + 8 + 10$$

$$R = 24 \text{ kN}$$

(ii) Taking moment about y-axis and applying Varignon's theorem,

$$\Sigma\, M_x = R \times z$$

$$(6)(0) + (8)(0) + (10)(4) + 30 = 24(z)$$

$$\therefore\ z = 2.917 \text{ m}$$

(iii) Taking moment about z-axis and applying Varignon's theorem,

$$\Sigma\, M_z = R \times y$$

$$(6)(0) + (8)(0) + (10)(3) - 40 = 24(-y)$$

$$\therefore\ y = -0.583 \text{ m}$$

(iv) Resultant and its point of application w.r.t. origin

$\overline{\boldsymbol{R}} = 24\,\mathbf{j}$ (kN) acts at point $P(0, -0.583, 2.917)$ m

Problem 15

Three forces are acting on a vertical plate *OABC* of size 4 m by 5 m as shown in Fig. 4.15. Find the resultant of forces.

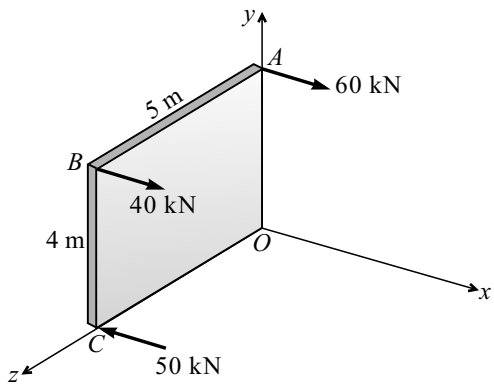

Fig. 4.15

Solution

(i) Resultant force (R)

$R = 60 + 40 - 50 \qquad \therefore\ R = 50$ kN

(ii) Taking moment about y-axis and applying Varignon's theorem,

$\Sigma M_y = R \times z$

$(60)(0) + (40)(5) + (-50)(5) = (50)(z)$

$\therefore\ z = -1$ m

(iii) Taking moment about z-axis and applying Varignon's theorem,

$\Sigma M_z = R \times y$

$(60)(4) + (40)(4) + (-50)(0) = (50)(y)$

$\therefore\ y = 8$ m

(iv) Resultant and its point of application w.r.t. origin

$\overline{\boldsymbol{R}} = 50\,\mathbf{i}$ kN $(\rightarrow)$ acts at point $P(0, 8, -1)$ m

Problem 16

A plate foundation is subjected to five vertical forces as shown in Fig. 4.16. Replace these forces by means of a single vertical force and find the point of replacement.

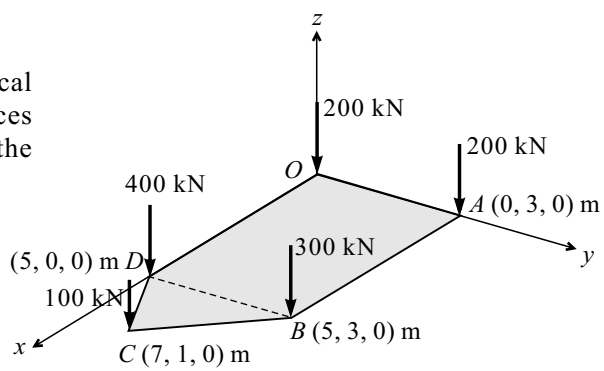

Fig. 4.16

Solution

(i) Resultant force (R)

$R = 200 - 200 - 300 - 100 - 400$

$R = -1200$

$R = 1200$ kN $(\downarrow)$

(ii) Taking moment about x-axis and applying Varignon's theorem,

$\Sigma M_x = R \times y$

$(-200)(0) + (-200)(3) + (-300)(3) + (-100)(1) + (-400)(0) = (-1200)(y)$

$\therefore\ y = 1.33$ m

(iii) Taking moment about y-axis and applying Varignon's theorem,

$\Sigma M_y = R \times x$

$(-200)(0) + (-200)(0) + (-300)(5) + (-100)(7) + (-400)(5) = (-1200)(x)$

$\therefore\ x = 3.5$ m

(iv) Resultant and its point of application w.r.t. origin

$\overline{\boldsymbol{R}} = -1200\,\mathbf{k}$ kN acts at point $P(3.5, 1.33, 0)$ m

Problem 17

Determine the loads to be applied at A and F, if the resultant of all six loads is to pass through the centre of the foundation of hexagonal shape of 3 m side as shown in Fig. 4.17(a).

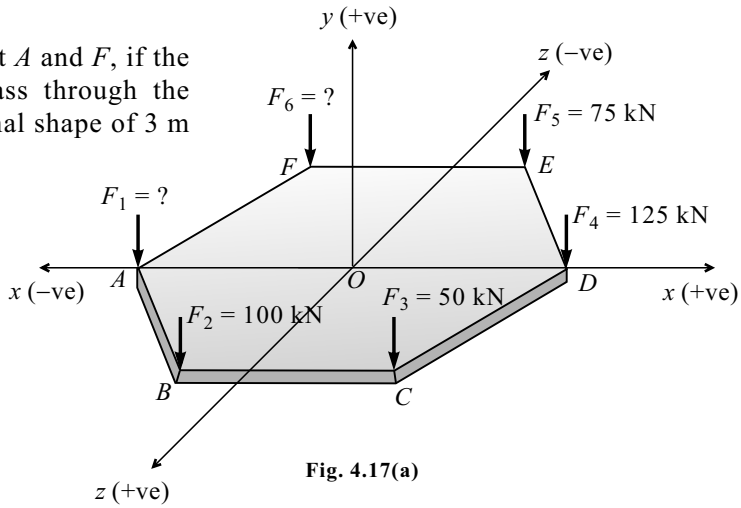

Fig. 4.17(a)

Solution

(i) Draw the top view of the hexagonal plate [Fig. 4.17(b)].

$\Delta\, OBC$ is an equilateral triangle

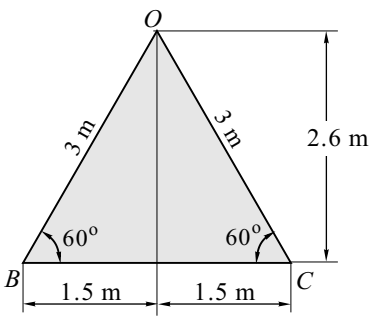

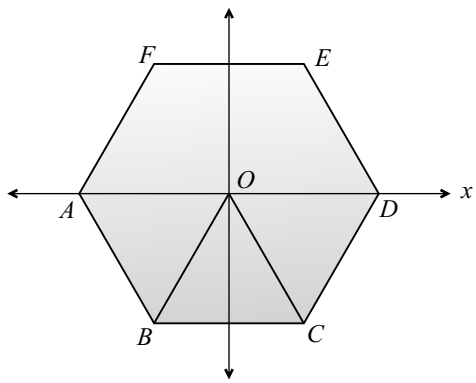

Fig. 4.17(b) : Top view

$\therefore$ coordinates are as follows:

$O(0, 0, 0)$; $A(-3, 0, 0)$; $B(-1.5, 0, 2.6)$; $C(1.5, 0, 2.6)$;
$D(3, 0, 0)$; $E(1.5, 0, -2.6)$; $F(-1.5, 0, -2.6)$.

(ii) Taking moment about x-axis and applying Varignon's theorem,

$$\Sigma M_x = R \times z$$

$$(-F_1)(0) + (-100)(2.6) + (-50)(2.6) + (-125)(0) + (-75)(-2.6) + (-F_6)(-2.6) = R \times 0$$

$\{\ \because R$ is passing through origin $O\ \therefore\ z = 0\ \}$

$\therefore\ F_6 = 75$ kN $(\downarrow)$

(iii) Taking moment about z-axis and applying Varignon's theorem,

$$\Sigma M_z = R \times x$$

$$(-F_1)(-3) + (-100)(-1.5) + (-50)(1.5) + (-125)(3) + (-75)(1.5) + (-75)(-1.5) = R \times 0$$

$\{\ \because R$ is passing through origin $O\ \therefore\ x = 0\ \}$

$\therefore\ F_1 = 100$ kN $(\downarrow)$

4.5 RESULTANT OF GENERAL FORCE SYSTEM IN SPACE

1. Write all the forces in vector form and add them.

Resultant force vector $\overline{\boldsymbol{R}} = \Sigma\,\overline{\boldsymbol{F}} = \overline{\boldsymbol{F}}_1 + \overline{\boldsymbol{F}}_2 + \overline{\boldsymbol{F}}_3 + ...$

2. Take moments of all forces about the origin or given point and add them.

Resultant moment (couple) vector $\Sigma\,\overline{\boldsymbol{M}}_O = \overline{\boldsymbol{M}}_1 + \overline{\boldsymbol{M}}_2 + \overline{\boldsymbol{M}}_3 + ...$

Note :
- General force system in space cannot be reduced to a single force. Therefore, the resultant is expressed in two components :
  (i) Resultant force component
  (ii) Resultant moment (couple) component.
- Varignon's theorem is not applicable to general force system.

Procedure

1. Coordinates

2. Force vectors $\overline{\boldsymbol{F}}_1, \overline{\boldsymbol{F}}_2, \overline{\boldsymbol{F}}_3, ...$

3. Position vectors (w.r.t. origin or given point) $\overline{r}_1, \overline{r}_2, \overline{r}_3, ...$

4. Moment vectors $\overline{\boldsymbol{M}}_1, \overline{\boldsymbol{M}}_2, \overline{\boldsymbol{M}}_3, ... + \overline{\boldsymbol{C}}_1 + \overline{\boldsymbol{C}}_2 + \overline{\boldsymbol{C}}_3 + ...$

5. Resultant force vector $\overline{\boldsymbol{R}} = \overline{\boldsymbol{F}}_1 + \overline{\boldsymbol{F}}_2 + \overline{\boldsymbol{F}}_3 + ...$

6. Resultant moment (couple) vector $\Sigma\,\overline{\boldsymbol{M}} = \overline{\boldsymbol{M}}_1 + \overline{\boldsymbol{M}}_2 + \overline{\boldsymbol{M}}_3 + ... + \overline{\boldsymbol{C}}_1 + \overline{\boldsymbol{C}}_2 + \overline{\boldsymbol{C}}_3 + ...$

Solved Problems on a General Force System in Space

Problem 18

Determine the resultant force and resultant couple moment at point $A(3, 1, 2)$ m of the following force systems:

$\overline{\boldsymbol{F}}_1 = 5\,\mathbf{i} + 8\,\mathbf{k}$ (N) acting at point $B(8, 3, -1)$ m

$\overline{\boldsymbol{F}}_2 = 3\,\mathbf{i} + 2\,\mathbf{j} - 4\,\mathbf{k}$ (N) acting at point $O(0, 0, 0)$ m

$\overline{\boldsymbol{M}} = 12\,\mathbf{i} - 20\,\mathbf{j} + 9\,\mathbf{k}$ (N-m).

Solution

(i) Coordinates: $A(3, 1, 2)$; $B(8, 3, -1)$.

(ii) Force vector

$\overline{\boldsymbol{F}}_1 = 5\,\mathbf{i} + 8\,\mathbf{k}$ (N); $\overline{\boldsymbol{F}}_2 = 3\,\mathbf{i} + 2\,\mathbf{j} - 4\,\mathbf{k}$ (N).

(iii) Position vectors w.r.t. point A

$\overline{\boldsymbol{r}}_1 = \overline{AB} = 5\,\mathbf{i} + 2\,\mathbf{j} - 3\,\mathbf{k}$; $\overline{\boldsymbol{r}}_2 = \overline{AO} = -3\,\mathbf{i} - \mathbf{j} - 2\,\mathbf{k}$

(iv) Moment vectors

$$\overline{\boldsymbol{M}}_1 = \overline{\boldsymbol{r}}_1 \times \overline{\boldsymbol{F}}_1$$

$$\overline{\boldsymbol{M}}_1 = \begin{vmatrix} \mathbf{i} & \mathbf{j} & \mathbf{k} \\ 5 & 2 & -3 \\ 5 & 0 & 8 \end{vmatrix}$$

$$\overline{\boldsymbol{M}}_1 = 16\,\mathbf{i} - 55\,\mathbf{j} - 10\,\mathbf{k} \text{ (N-m)}$$

$$\overline{\boldsymbol{M}}_2 = \overline{\boldsymbol{r}}_2 \times \overline{\boldsymbol{F}}_2$$

$$\overline{\boldsymbol{M}}_2 = \begin{vmatrix} \mathbf{i} & \mathbf{j} & \mathbf{k} \\ -3 & -1 & -1 \\ 3 & 2 & -4 \end{vmatrix}$$

$$\overline{\boldsymbol{M}}_2 = 8\,\mathbf{i} - 18\,\mathbf{j} - 3\,\mathbf{k} \text{ (N-m)}$$

$$\therefore\ \overline{\boldsymbol{M}} = 12\,\mathbf{i} - 20\,\mathbf{j} + 9\,\mathbf{k} \text{ (N-m)}$$

(v) Resultant force vector

$$\overline{\boldsymbol{R}} = \overline{\boldsymbol{F}}_1 + \overline{\boldsymbol{F}}_2 = 5\,\mathbf{i} + 8\,\mathbf{k} + 3\,\mathbf{i} + 2\,\mathbf{j} - 4\,\mathbf{k}$$

$$\overline{\boldsymbol{R}} = 8\,\mathbf{i} + 2\,\mathbf{j} + 4\,\mathbf{k} \text{ (N)}$$

(vi) Resultant moment vector

$$\Sigma\,\overline{\boldsymbol{M}}_A = \overline{\boldsymbol{M}}_1 + \overline{\boldsymbol{M}}_2 + \overline{\boldsymbol{M}}$$

$$\Sigma\,\overline{\boldsymbol{M}}_A = 26\,\mathbf{i} - 93\,\mathbf{j} - 4\,\mathbf{k} \text{ (N-m)}$$

Problem 19

Forces $F_1 = 1$ kN, $F_2 = 3$ kN, $F_3 = 2$ kN, $F_4 = 5$ kN and $F_5 = 2$ kN act along the line joining the corners of the parallel piped whose sides are 2.5 m, 2 m and 1.5 m as shown in Fig. 4.19. Find the resultant force and the moment of the resultant couple at the origin O.

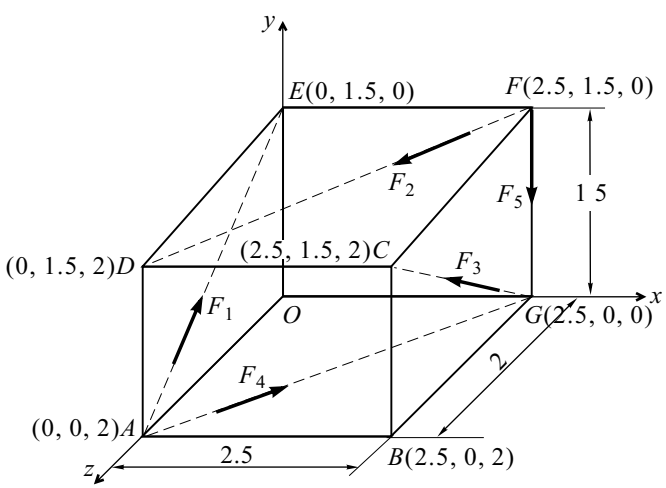

Fig. 4.19

Solution

Given : $F_1 = 1$ kN $(A \rightarrow E)$;

$F_2 = 3$ kN $(F \rightarrow D)$; $F_3 = 2$ kN $(G \rightarrow C)$;

$F_4 = 5$ kN $(A \rightarrow G)$; $F_5 = 2$ kN $(F \rightarrow G)$.

(i) Coordinates: $O(0, 0, 0)$; $A(0, 0, 2)$; $B(2.5, 0, 2)$; $C(2.5, 1.5, 2)$; $D(0, 1.5, 2)$; $E(0, 1.5, 0)$; $F(2.5, 1.5, 0)$; $G(2.5, 0, 0)$.

(ii) Force vector

$$\overline{\boldsymbol{F}}_1 = (F_1)(\overline{\boldsymbol{e}}_{AE}) = (1)\left[\frac{1.5\,\mathbf{j} - 2\,\mathbf{k}}{\sqrt{(1.5)^2 + 2^2}}\right] \quad \therefore\ \overline{\boldsymbol{F}}_1 = 0.6\,\mathbf{j} - 0.8\,\mathbf{k}$$

$$\overline{\boldsymbol{F}}_2 = (F_2)(\overline{\boldsymbol{e}}_{FD}) = (3)\left[\frac{-2.5\,\mathbf{i} + 2\,\mathbf{k}}{\sqrt{(2.5)^2 + 2^2}}\right] \quad \therefore\ \overline{\boldsymbol{F}}_2 = -2.34\,\mathbf{i} + 1.87\,\mathbf{k}$$

$$\overline{F}_3 = (F_3)(\overline{e}_{GC}) = (2)\left[\frac{1.5\,\mathbf{j} + 2\,\mathbf{k}}{\sqrt{(1.5)^2 + 2^2}}\right] \quad \therefore \quad \overline{F}_3 = 1.2\,\mathbf{j} + 1.6\,\mathbf{k}$$

$$\overline{F}_4 = (F_4)(\overline{e}_{AG}) = (5)\left[\frac{2.5\,\mathbf{i} - 2\,\mathbf{k}}{\sqrt{(2.5)^2 + 2^2}}\right] \quad \therefore \quad \overline{F}_4 = 3.90\,\mathbf{i} - 3.12\,\mathbf{k}$$

$$\overline{F}_5 = (F_5)(\overline{e}_{FG}) = (2)\left[\frac{-1.5\,\mathbf{j}}{\sqrt{(1.5)^2}}\right] \quad \therefore \quad \overline{F}_5 = -2\,\mathbf{j}$$

(iii) Position vectors

$$\overline{r}_1 = 2\,\mathbf{k}\,;\ \overline{r}_2 = 1.5\,\mathbf{j} + 2\,\mathbf{k}\,;\ \overline{r}_3 = 2.5\,\mathbf{i}\,;\ \overline{r}_4 = 2\,\mathbf{k}\,;\ \overline{r}_5 = 2.5\,\mathbf{i}$$

(iv) Moment vectors

$$\overline{M}_1 = \overline{r}_1 \times \overline{F}_1 = \begin{vmatrix} \mathbf{i} & \mathbf{j} & \mathbf{k} \\ 0 & 0 & 2 \\ 0 & 0.6 & -0.8 \end{vmatrix} \quad \therefore \quad \overline{M}_1 = -1.2\,\mathbf{i}$$

$$\overline{M}_2 = \overline{r}_2 \times \overline{F}_2 = \begin{vmatrix} \mathbf{i} & \mathbf{j} & \mathbf{k} \\ 0 & 1.5 & 2 \\ -2.34 & 0 & 1.87 \end{vmatrix} \quad \therefore \quad \overline{M}_2 = 2.8\,\mathbf{i} - 4.68\,\mathbf{j} + 3.51\,\mathbf{k}$$

$$\overline{M}_3 = \overline{r}_3 \times \overline{F}_3 = \begin{vmatrix} \mathbf{i} & \mathbf{j} & \mathbf{k} \\ 2.5 & 0 & 0 \\ 0 & 1.2 & 1.6 \end{vmatrix} \quad \therefore \quad \overline{M}_3 = -4\,\mathbf{j} + 3\,\mathbf{k}$$

$$\overline{M}_4 = \overline{r}_4 \times \overline{F}_4 = \begin{vmatrix} \mathbf{i} & \mathbf{j} & \mathbf{k} \\ 0 & 0 & 2 \\ 3.9 & 0 & -3.12 \end{vmatrix} \quad \therefore \quad \overline{M}_4 = 7.8\,\mathbf{j}$$

$$\overline{M}_5 = \overline{r}_5 \times \overline{F}_5 = \begin{vmatrix} \mathbf{i} & \mathbf{j} & \mathbf{k} \\ 2.5 & 0 & 0 \\ 0 & -2 & 0 \end{vmatrix} \quad \therefore \quad \overline{M}_5 = -5\,\mathbf{k}$$

(v) Resultant force vector

$$\overline{R} = \overline{F}_1 + \overline{F}_2 + \overline{F}_3 + \overline{F}_4 + \overline{F}_5$$

$$\overline{R} = 1.56\,\mathbf{i} - 0.2\,\mathbf{j} - 0.45\,\mathbf{k}$$

(vi) Resultant moment vector

$$\Sigma\,\overline{M} = \overline{M}_1 + \overline{M}_2 + \overline{M}_3 + \overline{M}_4 + \overline{M}_5$$

$$\Sigma\,\overline{M} = 1.6\,\mathbf{i} - 0.88\,\mathbf{j} + 1.51\,\mathbf{k}$$

Problem 20

Determine the resultant force and the resultant couple of the force system shown in Fig. 4.20, where F_1 = 100 N, F_2 = 20 $\sqrt{2}$ N, F_3 = 40 N, C_1 = 250 N-m and C_2 = 100 N-m.

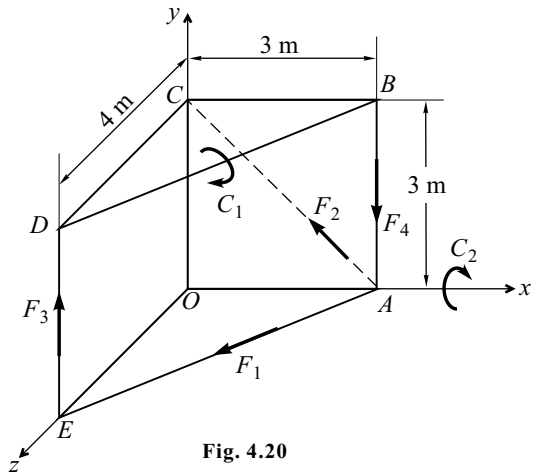

Fig. 4.20

Solution

Given : F_1 = 100 N $(A \rightarrow E)$;

F_2 = $20\sqrt{2}$ N $(A \rightarrow C)$; F_3 = 40 N $(E \rightarrow D)$;

F_4 = 40 N $(B \rightarrow A)$

C_1 = 250 N-m $(D \rightarrow B)$; C_2 = 100 N-m $(A \rightarrow O)$;

[By right-hand-thumb rule]

(i) Coordinates: $O(0, 0, 0)$; $A(3, 0, 0)$; $B(3, 3, 0)$; $C(0, 3, 0)$; $D(0, 3, 4)$; $E(0, 0, 4)$.

(ii) Force vector

$$\overline{\boldsymbol{F}}_1 = (F_1)(\overline{\boldsymbol{e}}_{AE}) = (100)\left[\frac{-3\,\mathbf{i} + 4\,\mathbf{k}}{\sqrt{9+16}}\right] \quad \therefore \quad \overline{\boldsymbol{F}}_1 = -60\,\mathbf{i} + 80\,\mathbf{k}$$

$$\overline{\boldsymbol{F}}_2 = (F_2)(\overline{\boldsymbol{e}}_{AC}) = (20\sqrt{2})\left[\frac{-3\,\mathbf{i} + 3\,\mathbf{j}}{\sqrt{9+9}}\right] \quad \therefore \quad \overline{\boldsymbol{F}}_2 = -20\,\mathbf{i} + 20\,\mathbf{j}$$

$$\overline{\boldsymbol{F}}_3 = (F_3)(\overline{\boldsymbol{e}}_{ED}) = 40\,\mathbf{j}$$

$$\overline{\boldsymbol{F}}_4 = (F_4)(\overline{\boldsymbol{e}}_{BA}) = -40\,\mathbf{j} \qquad \text{[By right-hand-thumb rule]}$$

$$\overline{\boldsymbol{C}}_1 = (C_1)(\overline{\boldsymbol{e}}_{DB}) = (250)\left[\frac{3\,\mathbf{i} - 4\,\mathbf{k}}{\sqrt{9+16}}\right] \quad \therefore \quad \overline{\boldsymbol{C}}_1 = 150\,\mathbf{i} - 200\,\mathbf{k}$$

$$\overline{\boldsymbol{C}}_2 = (C_2)(\overline{\boldsymbol{e}}_{AO}) = (100)\left[\frac{-3\,\mathbf{i}}{\sqrt{9}}\right] \quad \therefore \quad \overline{\boldsymbol{C}}_2 = -100\,\mathbf{i}$$

(iii) Position vectors

$$\overline{\boldsymbol{r}}_1 = 3\,\mathbf{i}\,;\ \overline{\boldsymbol{r}}_2 = 3\,\mathbf{i}\,;\ \overline{\boldsymbol{r}}_3 = 4\,\mathbf{k}\,;\ \overline{\boldsymbol{r}}_4 = 3\,\mathbf{i}$$

(iv) Moment vectors

$$\overline{\boldsymbol{M}}_1 = \overline{\boldsymbol{r}}_1 \times \overline{\boldsymbol{F}}_1 = \begin{vmatrix} \mathbf{i} & \mathbf{j} & \mathbf{k} \\ 3 & 0 & 0 \\ -60 & 0 & 80 \end{vmatrix} = \mathbf{i}\,(0) - \mathbf{j}\,(240) + \mathbf{k}\,(0) \qquad \therefore \quad \overline{\boldsymbol{M}}_1 = -240\,\mathbf{j}$$

$$\overline{\boldsymbol{M}}_2 = \overline{\boldsymbol{r}}_2 \times \overline{\boldsymbol{F}}_2 = \begin{vmatrix} \mathbf{i} & \mathbf{j} & \mathbf{k} \\ 3 & 0 & 0 \\ 20 & 20 & 0 \end{vmatrix} = \mathbf{i}\,(0) - \mathbf{j}\,(0) + \mathbf{k}\,(60) \qquad \therefore \quad \overline{\boldsymbol{M}}_2 = 60\,\mathbf{k}$$

$$\overline{M}_3 = \overline{r}_3 \times \overline{F}_3 = \begin{vmatrix} \mathbf{i} & \mathbf{j} & \mathbf{k} \\ 0 & 0 & 4 \\ 0 & 40 & 0 \end{vmatrix} = \mathbf{i}\,(-160) - \mathbf{j}\,(0) + \mathbf{k}\,(0)$$

$$\therefore\ \overline{M}_3 = -160\,\mathbf{i}$$

$$\overline{M}_4 = \overline{r}_4 \times \overline{F}_4 = \begin{vmatrix} \mathbf{i} & \mathbf{j} & \mathbf{k} \\ 3 & 0 & 0 \\ 0 & -40 & 0 \end{vmatrix} = \mathbf{i}\,(0) - \mathbf{j}\,(0) + \mathbf{k}\,(-120)$$

$$\therefore\ \overline{M}_4 = -120\,\mathbf{k}$$

From point (ii), we have

$\overline{C}_1 = 150\,\mathbf{i} - 200\,\mathbf{k}$ and $\overline{C}_2 = -100\,\mathbf{i}$

[Direction of couple is taken by right-hand-thumb rule]

(v) Resultant force vector

$$\overline{R} = \overline{F}_1 + \overline{F}_2 + \overline{F}_3 + \overline{F}_4$$

$$\overline{R} = (-60\,\mathbf{i} + 80\,\mathbf{k}) + (-20\,\mathbf{i} + 20\,\mathbf{j}) + 40\,\mathbf{j} - 40\,\mathbf{j}$$

$$\overline{R} = -80\,\mathbf{i} + 20\,\mathbf{j} + 80\,\mathbf{k}$$

(vi) Resultant moment (couple) vector

$$\Sigma\,\overline{M} = \overline{M}_1 + \overline{M}_2 + \overline{M}_3 + \overline{M}_4 + \overline{C}_1 + \overline{C}_2$$

$$\Sigma\,\overline{M} = -240\,\mathbf{j} + 60\,\mathbf{k} - 160\,\mathbf{i} - 120\,\mathbf{k} + (150\,\mathbf{i} - 200\,\mathbf{k}) - 100\,\mathbf{i}$$

$$\Sigma\,\overline{M} = -110\,\mathbf{i} - 240\,\mathbf{j} - 260\,\mathbf{k}$$

Problem 21

Five forces are shown on a rectangular block in Fig. 4.21. Replace the given system by a force and a couple at point D. Take $F_1 = 20$ N, $F_2 = 30$ N, $F_3 = 40$ N, $F_4 = 25$ N, $F_5 = 3$ N.

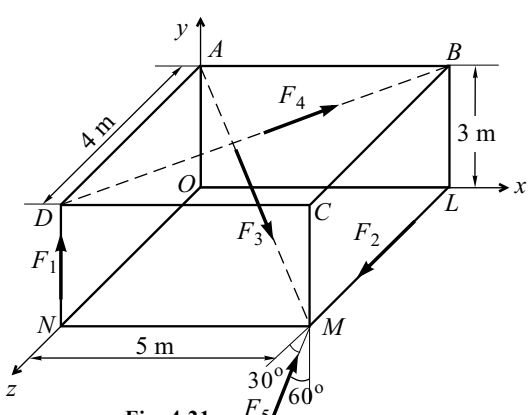

Fig. 4.21

Solution

(i) Coordinates: $A(0, 3, 0)$; $B(5, 3, 0)$; $D(0, 3, 4)$; $L(5, 0, 0)$; $M(5, 0, 4)$; $N(0, 0, 4)$.

(ii) Force vector

$$\overline{F}_1 = (F_1)(\overline{e}_{ND}) = 20\,\mathbf{j}$$

$$\overline{F}_2 = (F_2)(\overline{e}_{LM}) = 30\,\mathbf{k}$$

$$\overline{F}_3 = (F_3)(\overline{e}_{AM}) = (40)\left[\frac{5\,\mathbf{i} - 3\,\mathbf{j} + 4\,\mathbf{k}}{\sqrt{5^2 + 3^2 + 4^2}}\right]$$

$$\therefore\ \overline{F}_3 = 28.28\,\mathbf{i} - 16.97\,\mathbf{j} + 22.64\,\mathbf{k}$$

$$\overline{F}_4 = (F_4)(\overline{e}_{DB}) = (25)\left[\frac{5\,\mathbf{i} - 4\,\mathbf{k}}{\sqrt{5^2 + 4^2}}\right]$$

$$\therefore\ \overline{F}_4 = 19.52\,\mathbf{i} - 15.6\,\mathbf{k}$$

$$\overline{F}_5 = ?$$

$$\theta_y = 60^\circ,\ \theta_z = 180 - 30 \quad \therefore\ \theta_z = 150^\circ$$

By direction cosine rule, we have $\cos^2\theta_x + \cos^2\theta_y + \cos^2\theta_z = 1$

$$\therefore\ \cos\theta_x = \sqrt{1 - \cos^2 60 - \cos^2 150} \qquad \therefore\ \theta_x = 90^\circ$$

$$\overline{F}_5 = (35)\left[(\cos 90^\circ)\,\mathbf{i} + (\cos 60^\circ)\,\mathbf{j} + (\cos 150^\circ)\,\mathbf{k}\right]$$

$$\therefore\ \overline{F}_5 = 17.5\,\mathbf{j} - 30.31\,\mathbf{k}$$

(iii) Position vectors w.r.t. point D

$$\overline{r}_2 = \overline{DM} = 5\,\mathbf{i} - 3\,\mathbf{j}\ ; \quad \overline{r}_3 = \overline{DA} = -4\,\mathbf{k}\ ; \quad \overline{r}_5 = 5\,\mathbf{i} - 3\,\mathbf{j}$$

(iv) Moment vectors

$\overline{M}_1 = 0$ and $\overline{M}_4 = 0$ ($\because\ \overline{F}_1$ and $\overline{F}_4$ are passing through D)

$$\overline{M}_2 = \overline{r}_2 \times \overline{F}_2 = \begin{vmatrix} \mathbf{i} & \mathbf{j} & \mathbf{k} \\ 5 & -3 & 0 \\ 0 & 0 & 30 \end{vmatrix} \qquad \therefore\ \overline{M}_2 = -90\,\mathbf{i} - 150\,\mathbf{j}$$

$$\overline{M}_3 = \overline{r}_3 \times \overline{F}_3 = \begin{vmatrix} \mathbf{i} & \mathbf{j} & \mathbf{k} \\ 0 & 0 & -4 \\ 28.28 & -16.97 & 22.64 \end{vmatrix} \qquad \therefore\ \overline{M}_3 = -67.88\,\mathbf{i} - 113.12\,\mathbf{j}$$

$$\overline{M}_5 = \overline{r}_5 \times \overline{F}_5 = \begin{vmatrix} \mathbf{i} & \mathbf{j} & \mathbf{k} \\ 5 & -3 & 0 \\ 0 & 17.5 & -30.31 \end{vmatrix} \qquad \therefore\ \overline{M}_5 = 90.93\,\mathbf{i} + 151.55\,\mathbf{j} + 87.5\,\mathbf{k}$$

(v) Resultant force vector

$$\overline{R} = \overline{F}_1 + \overline{F}_2 + \overline{F}_3 + \overline{F}_4 + \overline{F}_5$$

$$\overline{R} = 47.8\,\mathbf{i} + 20.5\,\mathbf{j} + 6.78\,\mathbf{k}$$

(vi) Resultant moment vector

$$\Sigma\,\overline{M}_D = \overline{M}_1 + \overline{M}_2 + \overline{M}_3 + \overline{M}_4 + \overline{M}_5$$

$$\Sigma\,\overline{M}_D = -67\,\mathbf{i} - 111.57\,\mathbf{j} + 87.5\,\mathbf{k} \quad \text{(N-m)}$$

SUMMARY

- **Basic Vector Operation**

$$\overline{F}_1 = x_1\,\mathbf{i} + y_1\,\mathbf{j} + z_1\,\mathbf{k}$$

$$\overline{F}_2 = x_2\,\mathbf{i} + y_2\,\mathbf{j} + z_2\,\mathbf{k}$$

(a) Dot Product

$$\overline{F}_1 \cdot \overline{F}_2 = x_1x_2 + y_1y_2 + z_1z_2$$

(b) Cross Product

$$\overline{F}_1 \times \overline{F}_2 = \begin{vmatrix} \mathbf{i} & \mathbf{j} & \mathbf{k} \\ x_1 & y_1 & z_1 \\ x_2 & y_2 & z_2 \end{vmatrix}$$

- **Force Vector ($\overline{F}$)**

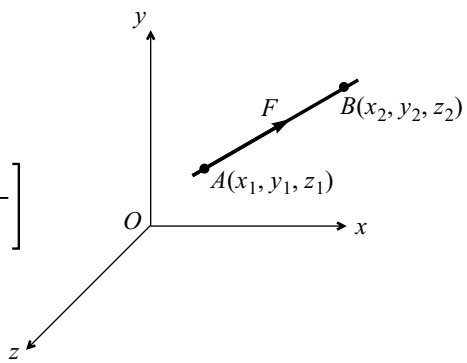

$$\overline{F} = (F)(\overline{e}_{AB})$$

$$\overline{F} = (F)\left[\frac{(x_2 - x_1)\,\mathbf{i} + (y_2 - y_1)\,\mathbf{j} + (z_2 - z_1)\,\mathbf{k}}{\sqrt{(x_2 - x_1)^2 + (y_2 - y_1)^2 + (z_2 - z_1)^2}}\right]$$

$$\overline{F} = F_x\,\mathbf{i} + F_y\,\mathbf{j} + F_z\,\mathbf{k}$$

- **Moment Vector**
  (Moment of a Force about a Given Point)

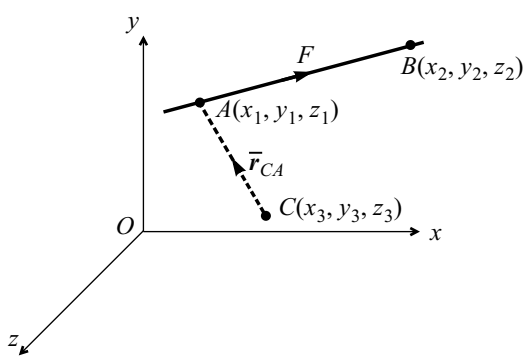

(i) Force Vector ($\overline{F}$)

$$\overline{F} = (F)(\overline{e}_{AB})$$

$$\overline{F} = F_x\,\mathbf{i} + F_y\,\mathbf{j} + F_z\,\mathbf{k}$$

(ii) Position Vector ($\overline{r}_{CA}$)

$$\overline{r}_{CA} = (x_1 - x_3)\,\mathbf{i} + (y_1 - y_3)\,\mathbf{j} + (z_1 - z_3)\,\mathbf{k}$$

$$\overline{r}_{CA} = x\,\mathbf{i} + y\,\mathbf{j} + z\,\mathbf{k}$$

(iii) Moment Vector ($\overline{M}_C$)

$$\overline{M}_C = \overline{r}_{CA} \times \overline{F} = \begin{vmatrix} \mathbf{i} & \mathbf{j} & \mathbf{k} \\ x & y & z \\ F_x & F_y & F_z \end{vmatrix}$$

$$\overline{M}_C = M_x\,\mathbf{i} + M_y\,\mathbf{j} + M_z\,\mathbf{k}$$

- **Vector Component of a Force along a Given Line**

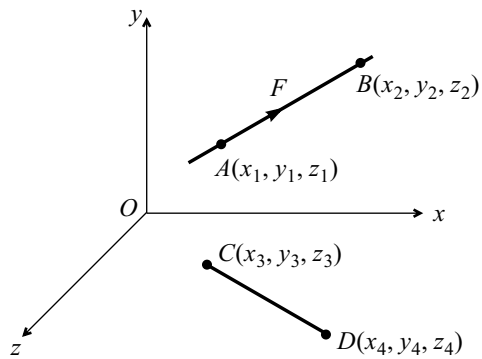

(i) Force Vector ($\overline{F}$)

$$\overline{F} = (F)(\overline{e}_{AB}) \qquad \therefore \ \overline{F} = F_x\,\mathbf{i} + F_y\,\mathbf{j} + F_z\,\mathbf{k}$$

(ii) Unit Vector ($\overline{e}_{CD}$)

$$\overline{e}_{CD} = \frac{(x_4 - x_3)\,\mathbf{i} + (y_4 - y_3)\,\mathbf{j} + (z_4 - z_3)\,\mathbf{k}}{\sqrt{(x_4 - x_3)^2 + (y_4 - y_3)^2 + (z_4 - z_3)^2}}$$

$$\overline{e}_{CD} = x\,\mathbf{i} + y\,\mathbf{j} + z\,\mathbf{k}$$

(iii) Scalar Component (F_{CD})

$$F_{CD} = \overline{F} \cdot \overline{e}_{CD}$$

(iv) Vector Component ($\overline{F}_{CD}$)

$$\overline{F}_{CD} = (F_{CD})(\overline{e}_{CD})$$

- **Moment of a Force about a Given Line (or Axis)**

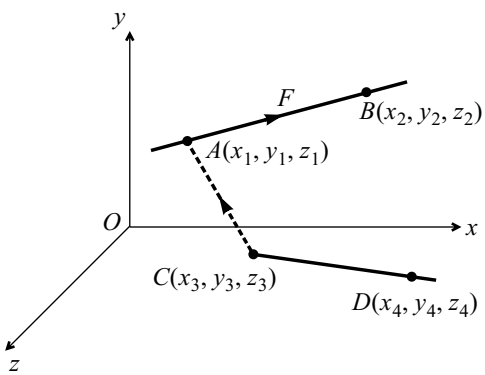

(i) Force Vector ($\overline{F}$)

$$\overline{F} = (F)\,(\overline{e}_{AB}) \qquad \therefore \ \overline{F} = F_x\,\mathbf{i} + F_y\,\mathbf{j} + F_z\,\mathbf{k}$$

(ii) Moment Vector ($\overline{M}_C$)

(a) $\overline{r}_{CA} = (x_1 - x_3)\,\mathbf{i} + (y_1 - y_3)\,\mathbf{j} + (z_1 - z_3)\,\mathbf{k}$

$$\overline{r}_{CA} = x\,\mathbf{i} + y\,\mathbf{j} + z\,\mathbf{k}$$

(b) $$\overline{M}_C = \overline{r}_{CA} \times \overline{F} = \begin{vmatrix} \mathbf{i} & \mathbf{j} & \mathbf{k} \\ x & y & z \\ F_x & F_y & F_z \end{vmatrix}$$

$$\overline{M}_C = M_x\,\mathbf{i} + M_y\,\mathbf{j} + M_z\,\mathbf{k}$$

(iii) Unit Vector ($\overline{e}_{CD}$)

$$\overline{e}_{CD} = \frac{(x_4 - x_3)\,\mathbf{i} + (y_4 - y_3)\,\mathbf{j} + (z_4 - z_3)\,\mathbf{k}}{\sqrt{(x_4 - x_3)^2 + (y_4 - y_3)^2 + (z_4 - z_3)^2}}$$

(iv) Scalar Component (M_{CD})

$$M_{CD} = \overline{M}_C \cdot \overline{e}_{CD}$$

(v) Vector Component ($\overline{M}_{CD}$)

$$\overline{M}_{CD} = (M_{CD})(\overline{e}_{CD})$$

- **Magnitude of a Force and Direction Angles**

$F_x = F\cos\theta_x$; $F_y = F\cos\theta_y$; $F_z = F\cos\theta_z$

Force in vector form is $\overline{F} = F_x\,\mathbf{i} + F_y\,\mathbf{j} + F_z\,\mathbf{k}$

Magnitude of force $F = \sqrt{(F_x)^2 + (F_y)^2 + (F_z)^2}$

By direction cosine rule, we have

$$\cos^2\theta_x + \cos^2\theta_y + \cos^2\theta_z = 1$$

- **Resultant of a Concurrent Force System**

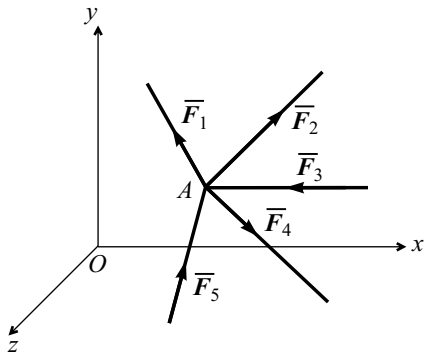

$$\overline{R} = \overline{F}_1 + \overline{F}_2 + \overline{F}_3 + \overline{F}_4 + \overline{F}_5$$

$$\overline{R} = (\Sigma F_x)\,\mathbf{i} + (\Sigma F_y)\,\mathbf{j} + (\Sigma F_z)\,\mathbf{k}$$

$$\overline{R} = R_x\,\mathbf{i} + R_y\,\mathbf{j} + R_z\,\mathbf{k}$$

Magnitude of resultant $R = \sqrt{R_x^2 + R_y^2 + R_z^2}$

Directions

$$\theta_x = \cos^{-1}\left(\frac{R_x}{R}\right);\ \theta_y = \cos^{-1}\left(\frac{R_y}{R}\right);\ \theta_z = \cos^{-1}\left(\frac{R_z}{R}\right)$$

- **Resultant of a Parallel Force System**

Procedure

1. Coordinates
2. Force vectors $\overline{F}_1, \overline{F}_2, \overline{F}_3, \ldots$
3. Position vectors $\overline{r}_1, \overline{r}_2, \overline{r}_3, \ldots$
4. Moment vectors $\overline{M}_1, \overline{M}_2, \overline{M}_3, \ldots$
5. Resultant force vector $\overline{R} = \overline{F}_1 + \overline{F}_2 + \overline{F}_3 + \ldots$
6. Resultant moment vector
   - **(a)** Algebraic sum of moment of forces about origin ($\Sigma\,\overline{M}_O$)
     $\Sigma\,\overline{M}_O = \overline{M}_1 + \overline{M}_2 + \overline{M}_3 + \ldots + \overline{C}_1 + \overline{C}_2 + \overline{C}_3 + \ldots$
   - **(b)** Moment of resultant force about origin ($\overline{M}_R$)
     $\overline{M}_R = \overline{r}_{OP} \times \overline{R}$ (where P is the point through which resultant acts)
7. Varignon's theorem
   $\Sigma\,\overline{M}_O = \overline{M}_R$

- **Resultant of a General Force System**

Procedure

1. Coordinates
2. Force vectors $\overline{F}_1, \overline{F}_2, \overline{F}_3, \ldots$
3. Position vectors (w.r.t. origin or given point) $\overline{r}_1, \overline{r}_2, \overline{r}_3, \ldots$
4. Moment vectors $\overline{M}_1, \overline{M}_2, \overline{M}_3, \ldots + \overline{C}_1 + \overline{C}_2 + \overline{C}_3 + \ldots$
5. Resultant force vector $\overline{R} = \overline{F}_1 + \overline{F}_2 + \overline{F}_3 + \ldots$
6. Resultant moment (couple) vector $\Sigma\,\overline{M} = \overline{M}_1 + \overline{M}_2 + \overline{M}_3 + \ldots + \overline{C}_1 + \overline{C}_2 + \overline{C}_3 + \ldots$

EXERCISES

[I] Problems

1. A force of 50 kN magnitude is acting at point $A(2, 3, 4)$ m towards point $B(6, -2, 3)$ m. Find the (a) vector component of this force along line AC. Point C is $(5, -1, 2)$ m and
(b) moment of the given force about a point $D(-1, 1, 2)$ m.

[***Ans.*** (a) $25.07\,\mathbf{i} - 33.45\,\mathbf{j} - 16.7\,\mathbf{k}$ (kN)
(b) $\overline{\boldsymbol{M}}_D = -21.08\,\mathbf{i} + 152.83\,\mathbf{j} - 121.21\,\mathbf{k}$ (kN-m)]

2. A force $\overline{\boldsymbol{F}} = 4\,\mathbf{i} - 3\,\mathbf{j} + 8\,\mathbf{k}$ (N) acts at a point $A(2, -1, 3)$. Find the
(a) vector component of F along the line AB, the coordinates of point B are $(3, 2, 3)$ m, and
(b) moment of the vector component of F about the origin.

[***Ans.*** (a) $-0.5\,\mathbf{i} - 1.5\,\mathbf{j}$ (N) (b) $4.5\,\mathbf{i} - 1.5\,\mathbf{j} - 3.5\,\mathbf{k}$ (N-m)]

3. A force of 200 N acts from $A(4, -2, 2)$ m, towards $B(-1, 2, 3)$ m. Find the scalar and vector component of moment of this force about a line CD where the coordinates of C and D are $C(2, 4, -3)$ and $D(6, -1, 1)$ m. Also find the moment of the above force about the origin.

[***Ans.*** $M_{CD} = -235.2$ (N),
$\overline{\boldsymbol{M}}_{CD} = -124.63\,\mathbf{i} + 155.2\,\mathbf{j} + 124.63\,\mathbf{k}$ (N-m), and
$\overline{\boldsymbol{M}}_O = -308.6\,\mathbf{i} + 432.04\,\mathbf{j} + 185.16\,\mathbf{k}$ (N-m)]

4. A 700 N force passes through two points $A(-5, -1, 4)$ towards $B(1, 2, 6)$ m. Find the
(a) moment of force about a point $C(2, -2, 1)$ m and
(b) scalar moment of the force about line OC where O is the origin.

[***Ans.*** (a) $-700\,\mathbf{i} + 3200\,\mathbf{j} - 2700\,\mathbf{k}$ (N-m) (b) 3500 (N.m)]

5. A force $\overline{\boldsymbol{F}} = 30\,\mathbf{i} + 40\,\mathbf{j} + 20\,\mathbf{k}$ N acts at a point $A(-2, 3, 2)$ m. Find its moment about a line OC lying in the x-y plane passing through origin and making an angle of 45° with positive axis.

[***Ans.*** 56.6 (N.m)]

6. A 1000 N force forms angles of 60°, 45° and 120° with x, y and z-axes, respectively. Write the equation of the force in the vector form.

[***Ans.*** $\overline{\boldsymbol{F}} = 500\,\mathbf{i} + 707.1\,\mathbf{j} - 500\,\mathbf{k}$ (N)]

7. Force vector F is given in the form $\overline{\boldsymbol{F}} = 20\,\mathbf{i} - 30\,\mathbf{j} + 60\,\mathbf{k}$ (N). Find θ_x, θ_y and θ_z.

[***Ans.*** $\theta_x = 73.4^\circ$, $\theta_y = 115.4^\circ$ and $\theta_z = 31^\circ$]

8. Determine the magnitude and the direction of a force, $\overline{\boldsymbol{F}} = 345\,\mathbf{i} + 150\,\mathbf{j}\ 290\,\mathbf{k}$.

[***Ans.*** $F = 475$ units, $\theta_x = 43.4^\circ$, $\theta_y = 71.6^\circ$ and $\theta_z = 127.62^\circ$]

9. A tower guy wire is anchored by means of a bolt at A as shown in Fig. 4.E9. The tension in the wire is 2500 N. Determine (a) the components F_x, F_y, F_z of the force acting on the bolt, and (b) the angles defining the direction of the force.

[***Ans.*** $F_x = -1000$ N, $F_y = 2120$ N, $F_z = 795$ N, $\theta_x = 115.1^\circ$, $\theta_y = 32^\circ$ and $\theta_z = 71.5^\circ$]

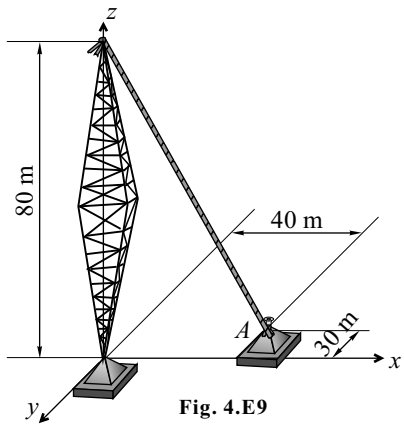

Fig. 4.E9

10. Find the moment of the force in the cable portion BH about the line AD in Fig. 4.E10. The force in the cable is 1125 N.

[***Ans.*** $-144\,\mathbf{i} + 108\,\mathbf{k}$ (N-m)]

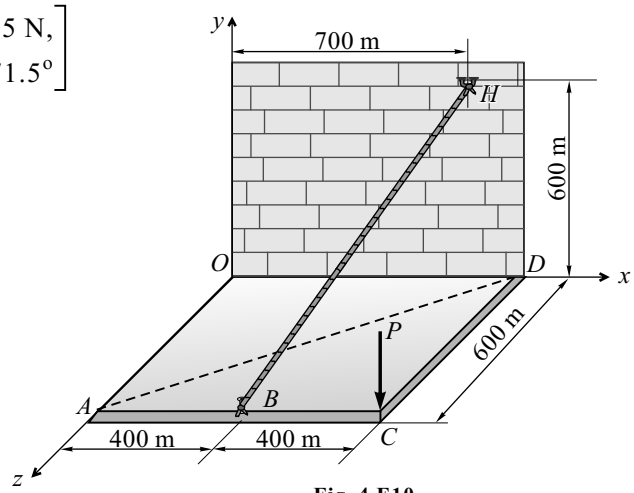

Fig. 4.E10

11. The frame ACD hinged at A and D is supported by a cable, which passes through a ring at B and is attached to hooks at G and H, as shown in Fig. 4.E11. Knowing that the tension in the cable is 450 N, determine the moment about the diagonal AD of the force exerted on the frame by portion BH of the cable.

[***Ans.*** $\overline{\boldsymbol{M}}_{AD} = -72\,\mathbf{i} + 54\,\mathbf{k}$ (N-m)]

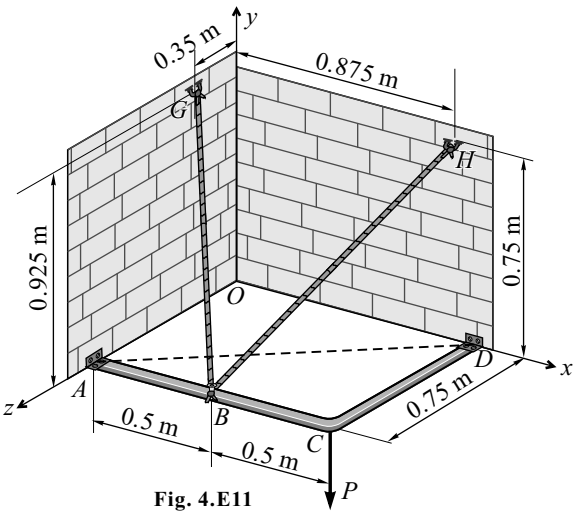

Fig. 4.E11

12. If the tension in the chain AB is 100 N in Fig. 4.E9, determine the magnitude M of its moment about the hinge axis CD.

[***Ans.*** $M_{CD} = 46.8$ (N-m)]

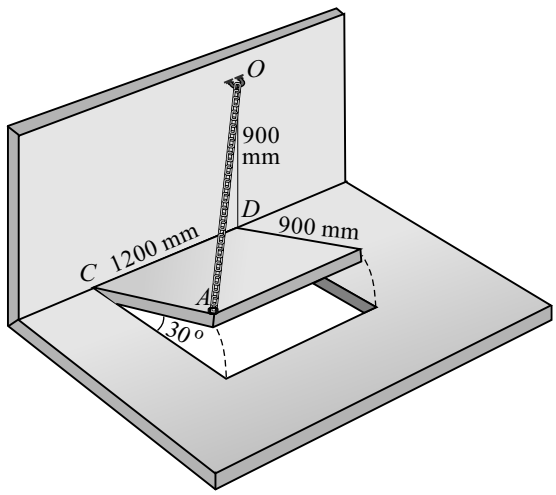

Fig. 4.E12

13. The lines of actions of three forces concurrent at origin O pass respectively through A, B, C having coordinates:

$x_A = -1$ $\quad y_A = +2$ $\quad z_A = +4$

$x_B = +3$ $\quad y_B = 0$ $\quad z_B = -3$

$x_C = +2$ $\quad y_C = -2$ $\quad z_C = +4$

The magnitude of the forces are $F_A = 40$ N, $F_B = 10$ N, $F_C = 30$ N Find the magnitude and direction of their resultant.

[***Ans.*** $R = 5364$ N, $\theta_x = 78.62^o$, $\theta_y = 84.41^o$ and $\theta_z = 12.69^o$]

14. The cable exerts forces $F_{AB} = 100$ N and $F_{AC} = 120$ N on the ring at A as shown in Fig. 4.E14. Determine the magnitude of the resultant force acting at A.

[***Ans.*** $R = 217$ N]

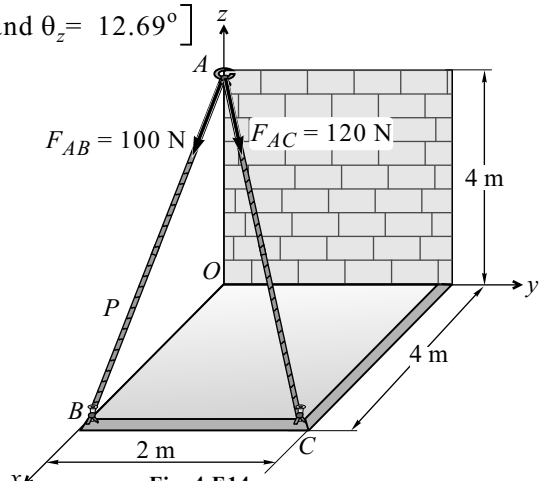

Fig. 4.E14

15. Knowing that the tension in cable AD is 2520 N as shown in Fig. 4.E15, determine the required value of tension in each of the cables AB and AC so that the resultant of the three forces applied by the cables at A is vertical.

[***Ans.*** $T_{AC} = 3131$ N and $T_{AB} = 2277$ N]

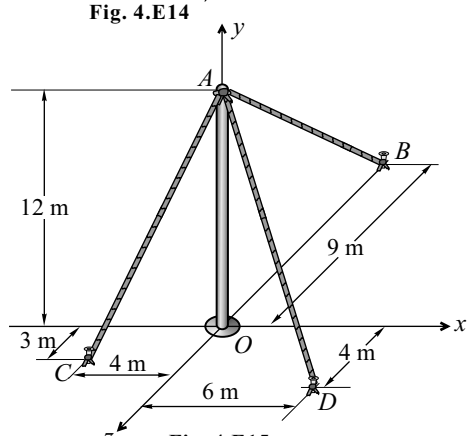

Fig. 4.E15

16. Figure 4.E16 shows a rectangular parallelopiped subjected to four forces in the direction shown. Reduce them to a resultant force at the origin and a moment. $OC = 5$ m; $OA = 3$ m ; $OD = 4$ m.

[***Ans.*** $\overline{\boldsymbol{R}} = 109.6\,\mathbf{i} + 1024.2\,\mathbf{j} + 1167\,\mathbf{k}$ (N) and

$\overline{\boldsymbol{M}}_O = 1103.1\,\mathbf{i} - 2121.2\,\mathbf{k}$ (N-m)]

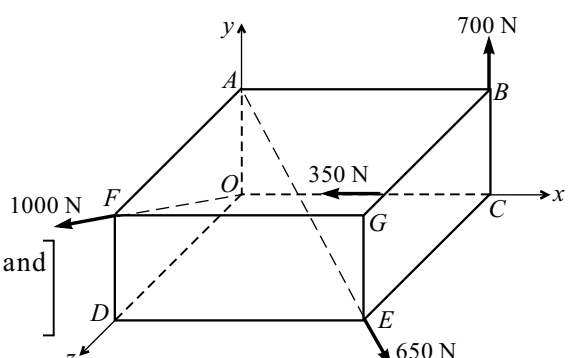

Fig. 4.E16

17. Replace the three forces shown on a bent in Fig. 4.E17 by a force-moment system at the origin.

[***Ans.*** $\overline{\boldsymbol{R}} = 50\,\mathbf{k}$ (N) and
$\overline{\boldsymbol{M}}_O = -25\,\mathbf{j} - 12.5\,\mathbf{k}$ (N-m)]

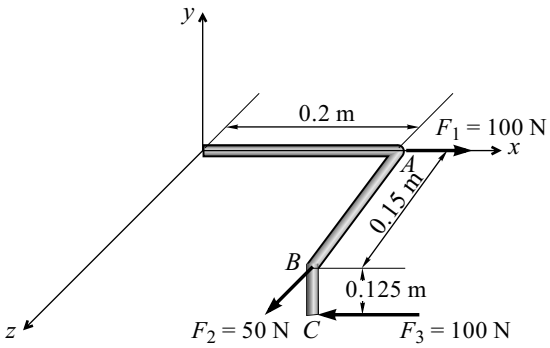

Fig. 4.E17

18. Find the resultant of the force system, as shown in Fig. 4.E18 at the origin.

[***Ans.*** $\overline{\boldsymbol{R}} = 9\,\mathbf{i} + 28\,\mathbf{j} + \mathbf{k}$ (N) and
$\overline{\boldsymbol{M}}_O = 40.39\,\mathbf{i} + 47\,\mathbf{j} - 68.39\,\mathbf{k}$ (N-m)]

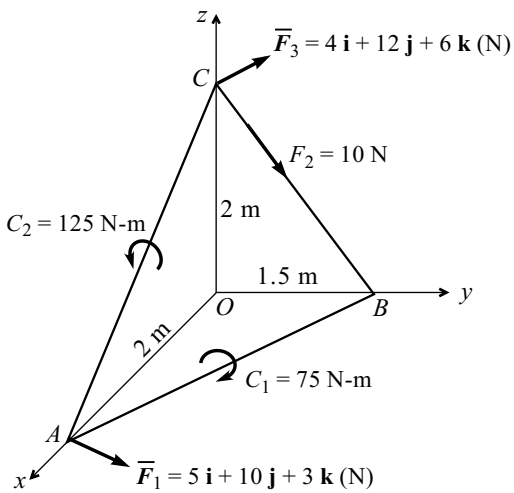

Fig. 4.E18

19. Determine the resultant of the force and couple system, which acts on the rectangular solid in Fig. 4.E19.

[***Ans.*** $\overline{\boldsymbol{R}} = 0$ and
$\overline{\boldsymbol{M}}_O = 10\,\mathbf{i}$ (N-m)]

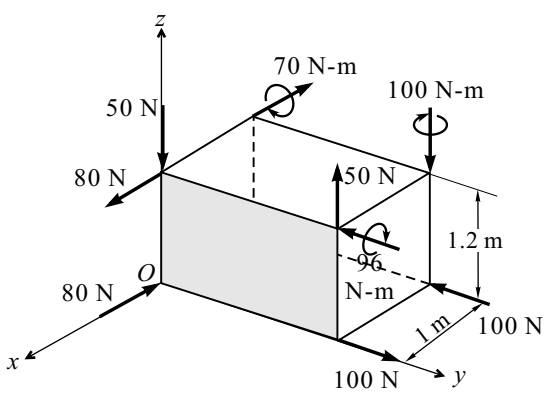

Fig. 4.E19

20. The concrete slab supports the six vertical loads shown in Fig. 4.E20. Determine the x and y coordinates of the point on the slab through which the resultant of the loading system passes. Also find the resultant.

[***Ans.*** $R = 184$ kN (↓) and
$x = 2.92$ m, $y = 6.33$ m]

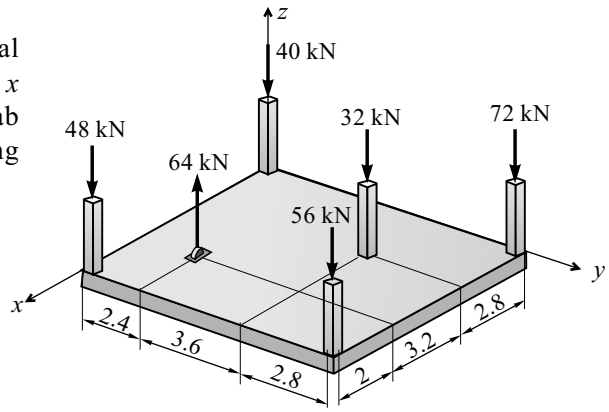

Fig. 4.E20

21. Determine the x and y coordinates of a point through which the resultant of the parallel forces passes in Fig. 4.E21. Also determine the resultant.

[***Ans.*** $\overline{\boldsymbol{R}} = -450\,\mathbf{k}$ (N) and
acts at (22.22, –53.33, 0) mm]

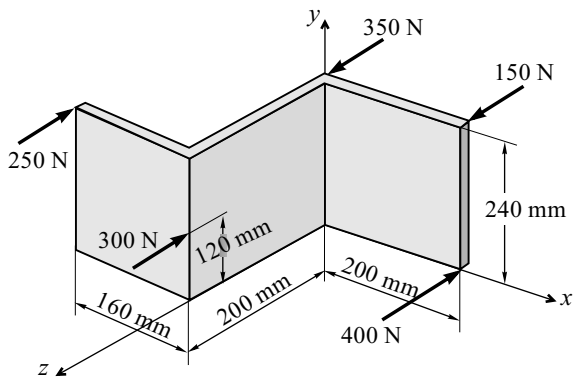

Fig. 4.E21

22. Three parallel bolting forces act on the rim of the circular cover plate as shown in Fig. 4.E22. Determine the magnitude and direction of a resultant force equivalent to the given force system and locate its point of application, P on the cover plate.

[***Ans.*** $R = 650$ N (↓) and
$P(0.24, -0.12, 0)$ m]

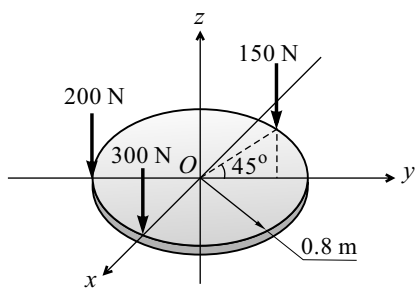

Fig. 4.E22

[II] Review Questions

1. Find the dot product and cross product of

$\overline{\boldsymbol{F}}_1 = x_1\,\mathbf{i} + y_1\,\mathbf{j} + z_1\,\mathbf{k}$ and

$\overline{\boldsymbol{F}}_2 = x_2\,\mathbf{i} + y_2\,\mathbf{j} + z_2\,\mathbf{k}$.

2. Find the force vector $\overline{\boldsymbol{F}}$ if the line of action of force in space passes through $A_1(x_1, y_1, z_1)$ and $B_2(x_2, y_2, z_2)$. Refer to Fig. RQ2.

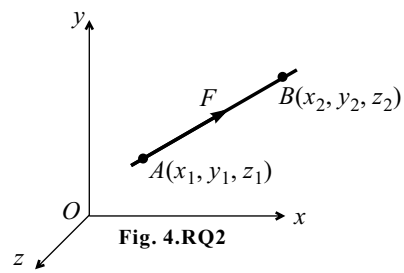

Fig. 4.RQ2

3. In Fig. RQ3, find the moment vector of force $\overline{\boldsymbol{F}}$ about a given point C.

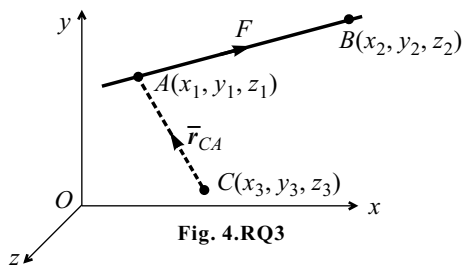

Fig. 4.RQ3

4. In Fig. RQ4, find the vector component of force $\overline{\boldsymbol{F}}$ about a given line CD.

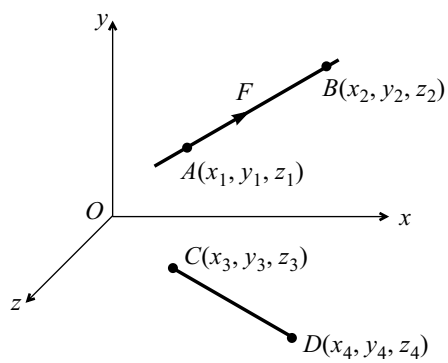

Fig. 4.RQ4

5. In Fig. RQ5, find the moment of force $\overline{\boldsymbol{F}}$ about a given line CD.

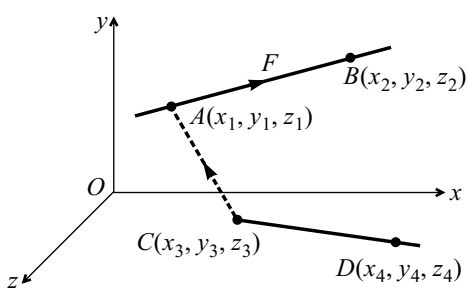

Fig. 4.RQ5

[III] Fill in the Blanks

1. By direction cosine rule, we have $\cos^2 \theta_x + \cos^2 \theta_y + \cos^2 \theta_z$ = _____ .
2. Scalar component of force vector $\overline{F}$ along the line AB is the _____ product of $\overline{F}$ and $\overline{e}_{AB}$.
3. For concurrent force system if resultant is along x-axis, then $\Sigma F_y = \Sigma F_z$ = _____.
4. Position of resultant of parallel force system is found by _____ theorem.
5. Varignon's theorem is _____ applicable to general force system.

[IV] Multiple-choice Questions

Select the appropriate answer from the given options.

1. If angle made by the force with y and z axis are $\theta_y = 60^o$ and $\theta_z = 45^o$ then θ_x = _____.
   (a) 130° **(b)** 90° **(c)** 105° **(d)** 120°
2. Which of the following actions of forces does not produce a moment ?
   (a) Opening a door **(b)** Opening a water tap
   (c) Paddling a bicycle **(d)** Compressing a spring
3. Which of the following conditions is a scalar quantity ?
   (a) Moment of force about an axis **(b)** Moment of force about a point other than origin
   (c) Moment of force about the origin **(d)** Moment of couple
4. Sign convention for anticlockwise moment is considered +ve _____.
   (a) since they point along $-z$ direction **(b)** since they point along $+z$ direction
   (c) just for namesake **(d)** none of the above
5. The magnitude of moment is _____ when line of action of force is perpendicular to the lever.
   (a) 0 **(b)** minimum **(c)** maximum **(d)** negative
6. A force couple system can be converted into a single force only when the resultant force and couple are _____ to each other.
   (a) inclined at 60° **(b)** perpendicular **(c)** inclined at 30° **(d)** parallel
7. Which of the following systems of forces cannot be reduced to a single force ?
   (a) Parallel forces in plane **(b)** Parallel forces in space
   (c) Non-concurrent forces in plane **(d)** Non-concurrent forces in space

CHAPTER

5

CENTRE OF GRAVITY

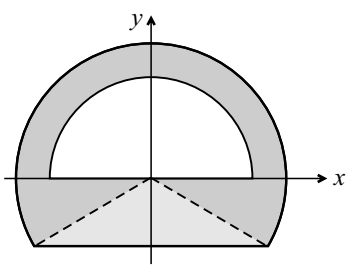

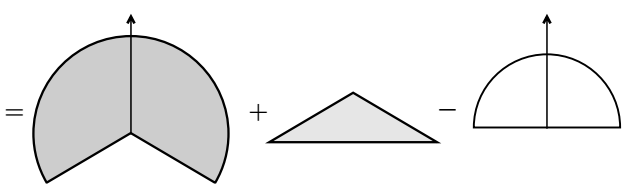

Learning Objectives

After reading this chapter, you will be able to answer the following questions:

- *What is meant by centre of gravity?*
- *What are the positions of centroid for various geometrical shapes?*
- *How can you locate the centroid of composite area?*
- *How can you locate the centroid for curve bounded area using integration?*

5.1 INTRODUCTION

Take a body of any size, shape and mass m. Fix the nails at three different positions say A, B and C as shown in Fig. 5.1-i. Suspend the body through point A. The body will be in equilibrium under the action of the tension in the cord and the resultant W of the gravitational force acting on all particles of the body. This resultant is clearly collinear with the cord and it will be assumed that we mark vertical dotted line of action through A. Repeat the experiment by suspending the same body from other points such as B and C and in each case, mark the vertical dotted lines of action of the resultant force. It can be observed that this line of action will be concurrent at a single point G, which is known as the ***centre of gravity*** of the body.

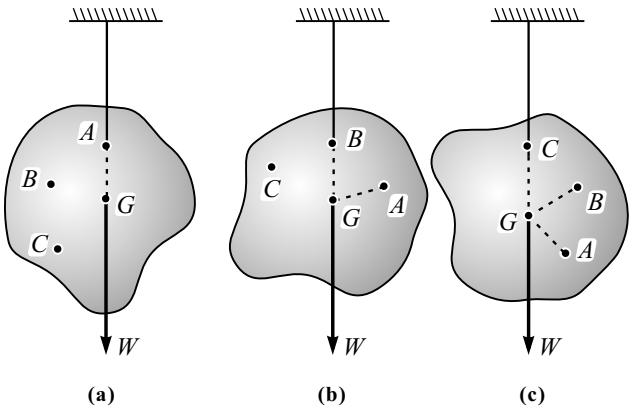

Fig. 5.1-i

Every body consists of particles. These particles are attracted towards the centre of earth. The force with which each particle of the body is attracted towards the centre of earth is called the *weight of that particle*. All these weights form a system of parallel forces acting towards the centre of the earth, which is far away from the body. Refer to Fig. 5.1-ii.

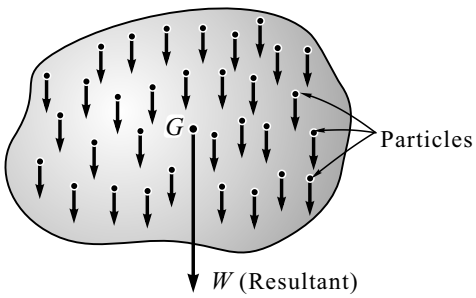

Fig. 5.1-ii

The attraction exerted by the earth on a rigid body can be represented by a single force W. ***Centre of gravity of a body*** is *a point through which the resultant force of gravity acts irrespective of the orientation of the body*.

5.2 CENTRE OF GRAVITY

Centre of gravity is a point where the whole weight of the body is assumed to act, i.e., *it is a point where entire distribution of gravitational force (weight) is suppose to be concentrated.*

The term ***centre of gravity*** is usually denoted by 'G' for all three-dimensional rigid bodies, e.g., sphere, table, vehicle, dam, human, etc.

Centroid *is a point where the whole area of a plane lamina (figure) is assumed to act. It is a point where the entire length, area and volume is supposed to be concentrated.*

In other words, *centroid is the geometrical centre of a figure*. We use the term *centroid* for *two-dimensional figures*, e.g., rectangle, triangle, circle, semicircle, sector, etc.

Centre of mass *is a point where the entire distribution of mass is supposed to be concentrated.*

Note : The method of finding the centroid, or centre of mass, or centre of gravity, is very similar. In many books, these terms are treated equivalent. At the surface of the Earth, centre of mass and centre of gravity are considered same. It will slightly differ if body is too large as compared to earth which is hypothetical.

5.2.1 Centre of Gravity of a Flat Plate

Consider a flat plate having a uniform thickness (t) and lying in xy-plane as shown in Fig. 5.2.1-i. The plate can be divided into small elements having weights W_1, W_2, W_3, ...W_n. The coordinates of elements are denoted by (x_1, y_1), (x_2, y_2), ... (x_n, y_n).

The resultant of the elementary forces is the total weight W of the plate which acts through point G having coordinates $(\bar{x}, \bar{y})$ and can be given as

$$W = W_1 + W_2 + ... + W_n$$

Taking moment about y-axis and applying Varignon's theorem, we have

$$W(\bar{x}) = W_1 x_1 + W_2 x_2 + ... + W_n x_n$$

$$\bar{x} = \frac{W_1 x_1 + W_2 x_2 + ... + W_n x_n}{W_1 + W_2 + ... + W_n} \quad ...(5.1)$$

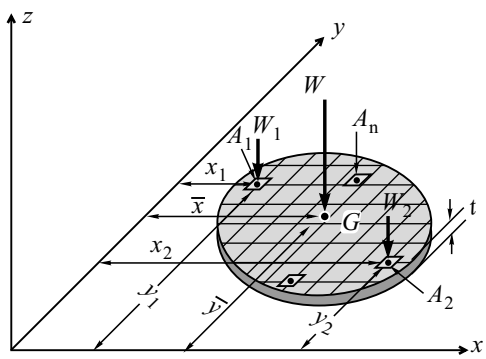

Fig. 5.2.1-i

Centroid of an Area

Let t be the uniform thickness, ρ be the mass density and A be the total surface area of the plate. We know, $W = m\,g = v\,\rho\,g = A\,t\,\rho\,g$. Similarly, considering the small elements of the plate, we get $W_1 = A_1\,t\,\rho\,g$, $W_2 = A_2\,t\,\rho\,g$, ... , $W_n = A_n\,t\,\rho\,g$

Putting the above relation in Eq. (5.1), we get

$$\bar{x} = \frac{A_1\,t\,\rho\,g\,x_1 + A_2\,t\,\rho\,g\,x_2 + ... + A_n\,t\,\rho\,g\,x_n}{A_1\,t\,\rho\,g + A_2\,t\,\rho\,g + ... + A_n\,t\,\rho\,g}$$

$$\bar{x} = \frac{A_1 x_1 + A_2 x_2 + ... + A_n x_n}{A_1 + A_2 + ... + A_n} = \frac{\Sigma\, A_i x_i}{\Sigma\, A_i} \quad ...(5.2)$$

Similarly, taking moment about x-axis and applying Varignon's theorem, we get

$$\bar{y} = \frac{A_1 y_1 + A_2 y_2 + ... + A_n y_n}{A_1 + A_2 + ... + A_n} = \frac{\Sigma\, A_i y_i}{\Sigma\, A_i} \quad ...(5.3)$$

Mathematically, the above two expressions can also be represented as follows:

$$\bar{x} = \frac{\int x\, dA}{\int dA} \quad ; \quad \bar{y} = \frac{\int y\, dA}{\int dA} \quad ...(5.4)$$

Points to Remember

1. Centroid is the geometrical centre of a figure.
2. For a symmetric figure, the centroid lies on the axis of symmetry.
3. If the figure is symmetric about x-axis then y coordinate of C.G., i.e., $\bar{y} = 0$.
4. If the figure is symmetric about y-axis then x coordinate of C.G., i.e., $\bar{x} = 0$.
5. If a figure has more than one axis of symmetry then the intersection of axis of symmetry is the centroid of the given figure.
6. Centroid may or may not lie on the given figure.
7. If the axis of symmetry is inclined at 45° to horizontal line then $\bar{x} = \bar{y}$.

Freely Suspended Plane Lamina in Equilibrium

For a freely suspended plane lamina in equilibrium, the centroid or centre of gravity will lie vertically below the point of suspension.

On the other hand, if a plane lamina is freely suspended exactly through the centroid or centre of gravity point, it will remain in equilibrium in any position.

Centroid of Areas

1. Centroid of Triangular Area

Consider the triangular area with base b and height h. (Fig. 5.2.2-ii)

Consider an elemental strip of thickness dy at a distance of y from base.

Now ΔADE and ΔABC, by property of similar triangles, we have

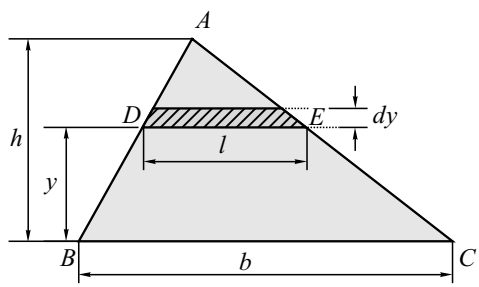

Fig. 5.2.2-ii

$$\frac{l}{b} = \frac{h-y}{h}$$

$$l = \frac{(h-y)b}{h}$$

From basic principle of centroid, we know

$$\bar{y} = \frac{\int y\, dA}{\int dA} \quad \text{where } dA = \text{Area of elemental strip}$$

$$y = \text{Centroid distance of strip from base}$$

$$= \frac{\int_0^h y\, l\, dy}{\int_0^h l\, dy} = \frac{\int_0^h \frac{h-y}{h}\, b\, y\, dy}{\int_0^h \frac{(h-y)b}{h}\, dy} = \frac{\frac{b}{h}\int_0^h (hy - y^2)\, dy}{\frac{b}{h}\int_0^h (h-y)\, dy}$$

$$= \frac{\left[\frac{hy^2}{2} - \frac{y^3}{3}\right]_0^h}{\left[hy - \frac{y^2}{2}\right]_0^h} = \frac{\left[\frac{h^3}{2} - \frac{h^3}{3}\right]}{\left[h^2 - \frac{h^2}{2}\right]} = \frac{\frac{h^3}{6}}{\frac{h^2}{2}}$$

$$\therefore \quad \bar{y} = \frac{h}{3}$$

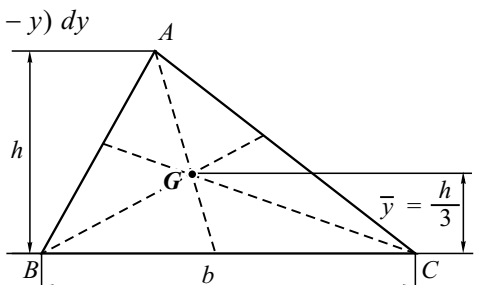

Fig. 5.2.2-iii

2. Centroid of Semicircular Area

Consider a semicircular lamina with radius r. (Fig. 5.2.2-iv)

Here, semicircular area is symmetric about y-axis, therefore $\bar{x} = 0$.

Select an elementary sector as shown in Fig. 5.2.2-iv, which can be considered as a triangle whose base is $r\,d\theta$ and altitude is r.

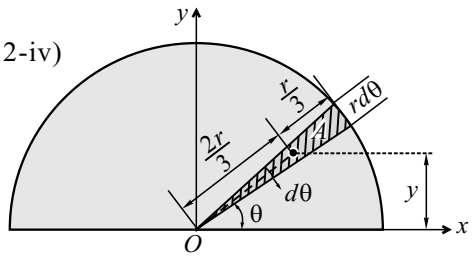

Fig. 5.2.2-iv

The location of the centroid of the elementary sector is A.

$\because$ Distance $OA = \frac{2r}{3}$, $\therefore$ y coordinate of the centroid of element is $y = \frac{2}{3} r \sin\theta$

Area of the elementary sector $dA = \frac{1}{2} \times r \times r\,d\theta = \frac{1}{2} r^2\,d\theta$

From basic principle of centroid, we have

$$\bar{y} = \frac{\int_0^{\pi} y\,dA}{\int_0^{\pi} dA} = \frac{\int_0^{\pi} \frac{2}{3} r \sin\theta \cdot \frac{1}{2} r^2\,d\theta}{\int_0^{\pi} \frac{1}{2} r^2\,d\theta} = \frac{\frac{r^3}{3}\int_0^{\pi} \sin\theta\,d\theta}{\frac{r^2}{2}\int_0^{\pi} d\theta}$$

$$= \frac{\frac{r^3}{3}\left[-\cos\theta\right]_0^{\pi}}{\frac{r^2}{2}\left[\theta\right]_0^{\pi}} = \frac{\frac{r^3}{3} \times 2}{\frac{r^2}{2}\pi}$$

$$\therefore \quad \bar{y} = \frac{4r}{3\pi}$$

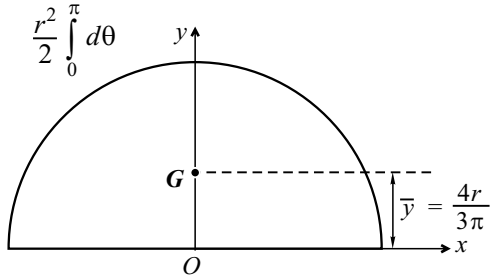

Fig. 5.2.2-v

3. Centroid of Quarter Circular Area

Consider a quarter circular area with radius r. Taking the similar consideration as that of semicircular area, we have

$$dA = \frac{1}{2} \times r \times r\,d\theta = \frac{1}{2} r^2\,d\theta$$

$$x = \frac{2}{3} r \cos\theta$$

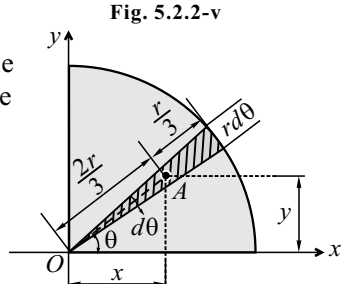

Fig. 5.2.2-vi

From the basic principle of centroid, we have

$$\bar{x} = \frac{\int_0^{\pi/2} x\,dA}{\int_0^{\pi/2} dA} = \frac{\int_0^{\pi/2} \frac{2}{3} r \cos\theta \cdot \frac{1}{2} r^2\,d\theta}{\int_0^{\pi/2} \frac{1}{2} r^2\,d\theta}$$

$$= \frac{\frac{r^3}{3}\int_0^{\pi/2} \cos\theta\,d\theta}{\frac{r^2}{2}\int_0^{\pi/2} d\theta} = \frac{\frac{r^3}{3}\left[\sin\theta\right]_0^{\pi/2}}{\frac{r^2}{2}\left[\theta\right]_0^{\pi/2}} = \frac{\frac{r^3}{3}}{\frac{r^2}{2}\,\frac{\pi}{2}}$$

$$\therefore \quad \bar{x} = \frac{4r}{3\pi}$$

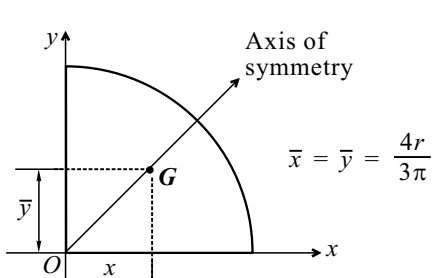

Fig. 5.2.2-vii

As axis of symmetry is inclined at 45° to the horizontal line

$$\therefore \quad \bar{x} = \bar{y} = \frac{4r}{3\pi}$$

4. Centroid of Sector of a Circle

Consider the sector of a circle which subtends an angle 2α at the centre. Here, the figure is symmetric about x-axis, therefore, $\bar{y} = 0$.

For finding $\bar{x}$, select an elementary sector which can be considered as a triangle whose base is $r\,d\theta$ and altitude is r.

The location of the centroid of the elementary sector is A as shown in Fig. 5.2.2-viii.

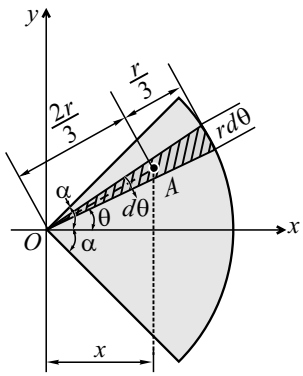

Fig. 5.2.2-viii

$$dA = \frac{1}{2} \times r \times r\,d\theta = \frac{1}{2} r^2\,d\theta$$

$$x = \frac{2}{3} r \cos\theta$$

From the basic principle of centroid, we have

$$\bar{x} = \frac{\int_{-\alpha}^{\alpha} x\,dA}{\int_{-\alpha}^{\alpha} dA} = \frac{\int_{-\alpha}^{\alpha} \frac{2}{3} r \cos\theta \cdot \frac{1}{2} r^2\,d\theta}{\int_{-\alpha}^{\alpha} \frac{1}{2} r^2\,d\theta}$$

$$= \frac{\frac{r^3}{3} \int_{-\alpha}^{\alpha} \cos\theta\,d\theta}{\frac{r^2}{2} \int_{-\alpha}^{\alpha} d\theta} = \frac{\frac{r^3}{3} \left[\sin\theta\right]_{-\alpha}^{\alpha}}{\frac{r^2}{2} \left[\theta\right]_{-\alpha}^{\alpha}}$$

$$= \frac{\frac{2}{3} r[\sin\alpha - \sin(-\alpha)]}{\alpha - (-\alpha)} = \frac{\frac{2r}{3} 2\sin\alpha}{2\alpha}$$

$$\therefore \quad \bar{x} = \frac{2r\sin\alpha}{3\alpha}$$

Procedure to Locate Centroid of Composite Area

1. Place the given figure into the first quadrant touching the outer edge of the figure to the axis selected, if the axes are not given.
2. Divide the given composite figure into standard geometrical shapes such as rectangle, triangle, circle, semicircle, quarter circle, sector of circle, etc.
3. Mark the centroids G_1, G_2, ..., etc., on the composite figure and find their coordinates w.r.t. the given axes, i.e. x_1, x_2, ..., etc., and y_1, y_2, ..., etc.
4. Find the coordinates of centroid using the following equations:

$$\bar{x} = \frac{\Sigma A_i x_i}{\Sigma A_i} = \frac{A_1 x_1 + A_2 x_2 + ... + A_n x_n}{A_1 + A_2 + ... + A_n}$$

$$\bar{y} = \frac{\Sigma A_i y_i}{\Sigma A_i} = \frac{A_1 y_1 + A_2 y_2 + ... + A_n y_n}{A_1 + A_2 + ... + A_n}$$

Solved Problems on C.G.

Problem 1

Find the centroid of the shaded area in Fig. 5.1(a).

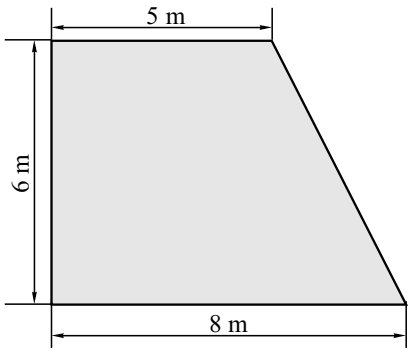

Fig. 5.1(a)

Solution

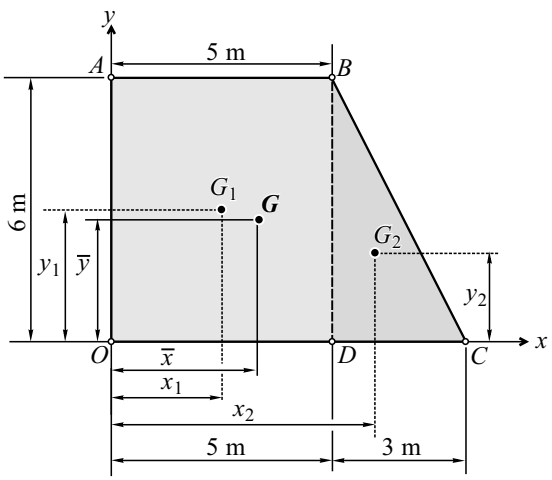

Fig. 5.1(b)

(i) The area can be viewed as a rectangle and a triangle combined together. The areas and centroidal coordinates for each of these shapes can be determined by referring to Fig. 5.1(b).

(ii) Consider rectangle *OABD*.

$$A_1 = 5 \times 6 = 30 \text{ m}^2$$

$$x_1 = \frac{5}{2} = 2.5 \text{ m}$$

$$y_1 = \frac{6}{2} = 3 \text{ m}$$

(iii) Consider triangle *DBC*.

$$A_2 = \frac{1}{2} \times 6 \times 3 = 9 \text{ m}^2$$

$$x_2 = 5 + \frac{3}{3} = 6 \text{ m}$$

$$y_2 = \frac{6}{3} = 2 \text{ m}$$

(iv) Coordinates of the centroid of shaded area

$$\bar{x} = \frac{30 \times 2.5 + 9 \times 6}{30 + 9} = 3.308 \text{ m}$$

$$\bar{y} = \frac{30 \times 3 + 9 \times 2}{30 + 9} = 2.769 \text{ m}$$

$\therefore$ coordinates of centroid w.r.t. origin *O* are ***G*** (3.308, 2.769) m.

Problem 2

Find the centroid of the shaded area shown in Fig. 5.2(a).

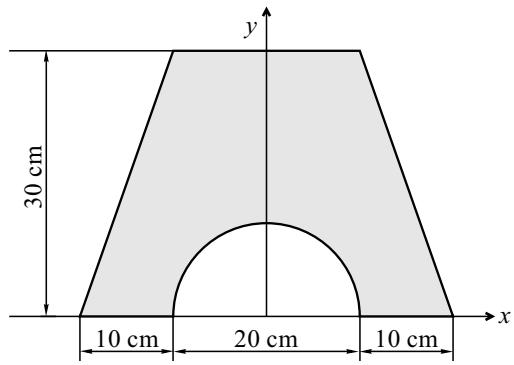

Fig. 5.2(a)

Solution

(i) The given figure is symmetric about the y-axis

$\therefore \quad \bar{x} = 0.$

The composite area can be viewed as a triangle ⊕ rectangle ⊕ triangle ⊖ semicircle. The areas and centroidal coordinates for each of these shapes can be determined by referring to Fig. 5.2(b).

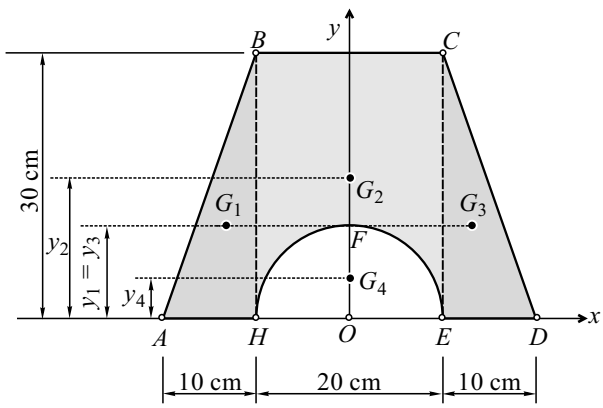

Fig. 5.2(b)

(ii) Consider triangle ABH.

$$A_1 = \frac{1}{2} \times 10 \times 30 = 150 \text{ cm}^2$$

$$y_1 = \frac{30}{3} = 10 \text{ cm}$$

(iii) Consider rectangle $HBCE$.

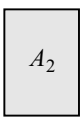

$$A_2 = 20 \times 30 = 600 \text{ cm}^2$$

$$y_2 = \frac{30}{2} = 15 \text{ cm}$$

(iv) Consider triangle ECD.

$$A_3 = \frac{1}{2} \times 10 \times 30 = 150 \text{ cm}^2$$

$$y_3 = \frac{30}{3} = 10 \text{ cm}$$

(v) Consider semicircle HFE.

$$r = 10 \text{ cm}$$

$$-A_4 = -\frac{\pi \times 10^2}{2} = -157.08 \text{ cm}^2$$

$$y_4 = \frac{4 \times 10}{3\pi} = 4.24 \text{ cm}$$

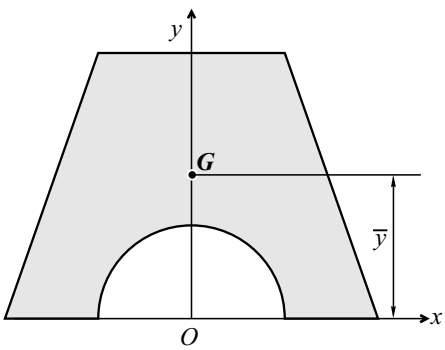

Fig. 5.2(c)

(vi) Centroid of the given shaded area is given as

$$\bar{y} = \frac{A_1 y_1 + A_2 y_2 + A_3 y_3 + (-A_4) y_4}{A_1 + A_2 + A_3 + (-A_4)}$$

$$= \frac{150 \times 10 + 600 \times 15 + 150 \times 10 - 157.08 \times 4.24}{150 + 600 + 150 - 157.08}$$

$$\bar{y} = 15.26 \text{ cm}$$

$\therefore$ coordinates of centroid w.r.t. origin O are $\boldsymbol{G}$ (0, 15.26) cm.

Problem 3

Find the centroid of the shaded area about x and y axis in Fig. 5.3(a).

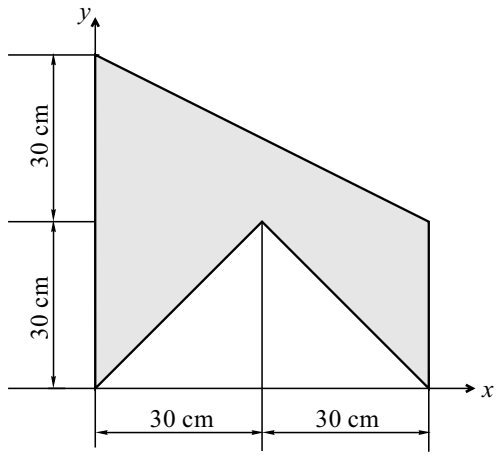

Fig. 5.3(a)

Solution

(i) The area can be viewed as three triangles combined together. The areas and centroidal coordinates for each of these shapes can be determined by referring to Fig. 5.3(b).

Distances of x_i and y_i are from origin O.

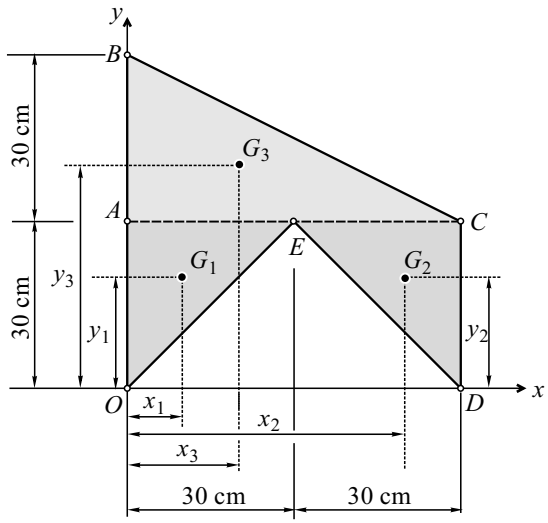

Fig. 5.3(b)

(ii) Consider triangle OAE.

$$A_1 = \frac{1}{2} \times 30 \times 30 = 450 \text{ cm}^2$$

$$x_1 = 10 \text{ cm and } y_1 = 20 \text{ cm}$$

(iii) Consider triangle ECD.

$$A_2 = \frac{1}{2} \times 30 \times 30 = 450 \text{ cm}^2$$

$$x_2 = 50 \text{ cm and } y_2 = 20 \text{ cm}$$

(iv) Consider triangle ABC.

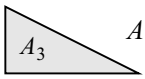

$$A_3 = \frac{1}{2} \times 60 \times 30 = 900 \text{ cm}^2$$

$$x_3 = 20 \text{ cm and } y_3 = 30 + 10 = 40 \text{ cm}$$

(v) Centroid of the given shaded area is given as

$$\bar{x} = \frac{A_1 x_1 + A_2 x_2 + A_3 x_3}{A_1 + A_2 + A_3}$$

$$= \frac{450 \times 10 + 450 \times 50 + 900 \times 20}{450 + 450 + 900}$$

$$\bar{x} = 25 \text{ cm}$$

$$\bar{y} = \frac{A_1 y_1 + A_2 y_2 + A_3 y_3}{A_1 + A_2 + A_3}$$

$$= \frac{450 \times 20 + 450 \times 20 + 900 \times 40}{450 + 450 + 900}$$

$$\bar{y} = 30 \text{ cm}$$

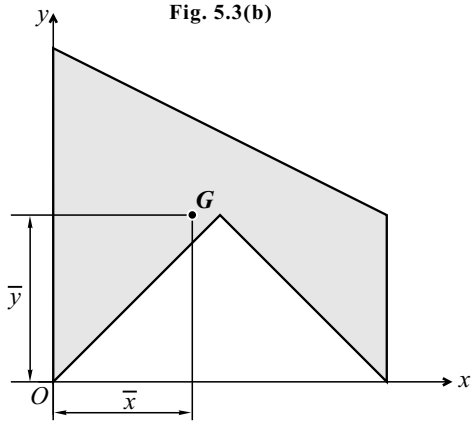

Fig. 5.3(c)

$\therefore$ coordinates of centroid w.r.t. origin O are $\boldsymbol{G}$ (25, 30) cm.

Problem 4

Three plates *ABC* and *BCDE* and *DEF* are welded together as shown in Fig. 5.4(a). A circle of 1.5 m diameter is cut from the composite plate. Determine the centroid of the remaining area.

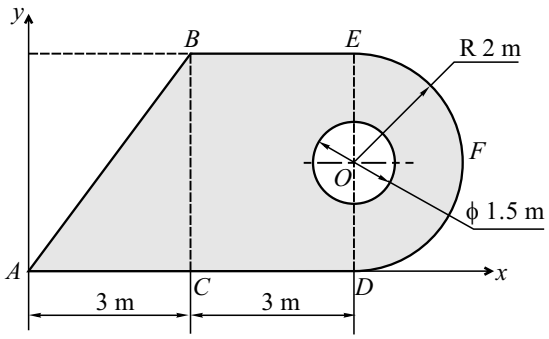

Fig. 5.4(a)

Solution

(i) The composite area can be viewed as a triangle ⊕ rectangle ⊕ semicircle ⊖ circle. The areas and centroidal coordinates for each of these shapes can be determined by referring to Fig. 5.4(b).

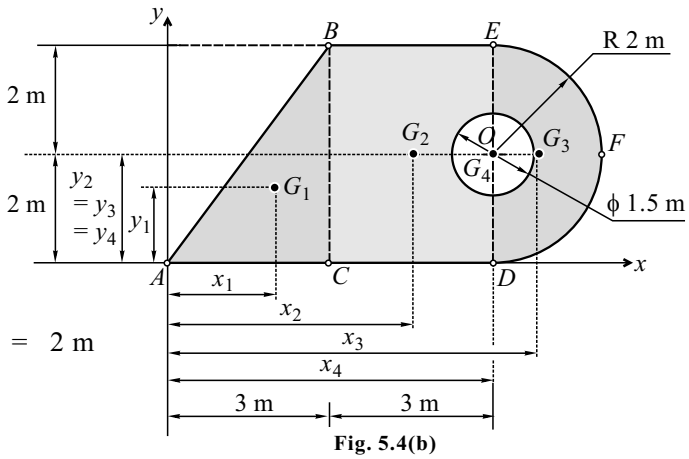

Fig. 5.4(b)

(ii) Consider triangle *ABC*.

$$A_1 = \frac{1}{2} \times 3 \times 4 = 6 \text{ m}^2$$

$$x_1 = \frac{2}{3} \times 3 = 2 \text{ m}$$

$$y_1 = \frac{1}{3} \times 4 = 1.33 \text{ m}$$

(iii) Consider rectangle *BCDE*.

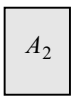

$$A_2 = 3 \times 4 = 12 \text{ m}^2$$

$$x_2 = 3 + 1.5 = 4.5 \text{ m and } y_2 = 2 \text{ m}$$

(iv) Consider semicircle *EFD*.

$$r = 2 \text{ m}$$

$$A_3 = \frac{\pi \times 2^2}{2} = 6.283 \text{ m}^2$$

$$x_3 = 3 + 3 + \frac{4 \times 2}{3\pi} = 6.848 \text{ m and}$$

$$y_3 = 2 \text{ m}$$

(v) Consider circle with centre *O* and radius *r*.

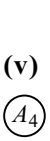

$$r = 0.75 \text{ m}$$

$$-A_4 = -(\pi \times 0.75^2) = -1.767 \text{ m}^2$$

$$x_4 = 6 \text{ m and } y_4 = 2 \text{ m}$$

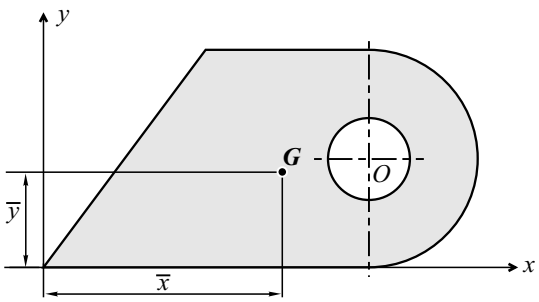

Fig. 5.4(c)

(vi) Centroid of the given shaded area is given as

$$\bar{x} = \frac{6 \times 2 + 12 \times 4.5 + 6.283 \times 6.848 - 1.767 \times 6}{6 + 12 + 6.283 - 1.767}$$

$$\bar{x} = 4.37 \text{ m}$$

$$\bar{y} = \frac{6 \times 1.33 + 12 \times 2 + 6.283 \times 2 - 1.767 \times 2}{6 + 12 + 6.283 - 1.767}$$

$$\bar{y} = 1.82 \text{ m}$$

∴ coordinates of centroid w.r.t. origin *A* are ***G*** (4.37, 1.82) m.

Problem 5

Three plates *ABC* and *BCDE* and *DEF* are welded together as shown in Fig. 5.5(a). A circle of 1.5 m diameter is cut from the composite plate. Determine the centroid of the remaining area.

Solution

By Tabulation Method

(i) Figure

The composite area can be divided into standard geometrical shapes

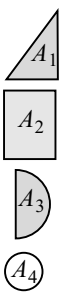

Triangle *ABC*

Rectangle *BCDE*

Semicircle *EFD*

Circle centre *O* and radius $r = 0.75$ m

The areas and centroidal coordinates for each of these shapes can be determined by referring to Fig. 5.5(a).

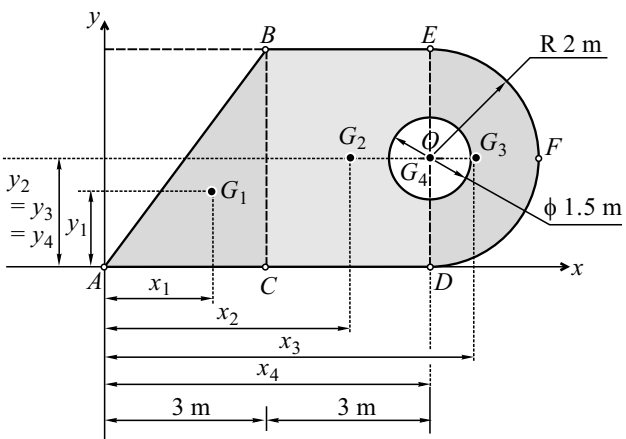

Fig. 5.5(a)

(ii) Calculations

When applying the method of composite areas, it is convenient to tabulate the data in the following manner:

Shape	Area A_i (m^2)	x_i (m)	$A_i x_i$	y_i (m)	$A_i y_i$
Triangle *ABC*	6	2	12	1.33	7.98
Rectangle *BCDE*	12	4.5	54	2	24
Semicircle *DEF*	6.283	6.848	43.025	2	12.566
Circle	–1.767	6	–10.602	2	–3.534
Σ	22.52	...	98.423	...	41.012

(iii) Location of $\bar{x}$ and $\bar{y}$

According to the tabulated results, the coordinates of the centroid of the composite area are

$$\bar{x} = \frac{\Sigma A_i x_i}{\Sigma A_i} = \frac{98.423}{22.52} = 4.37 \text{ m}$$

$$\bar{y} = \frac{\Sigma A_i y_i}{\Sigma A_i} = \frac{41.012}{22.52} = 1.82 \text{ m}$$

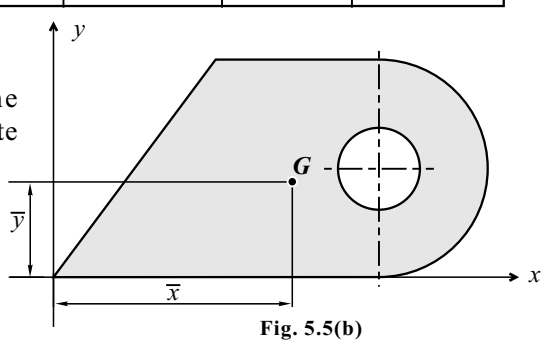

Fig. 5.5(b)

∴ coordinates of centroid w.r.t. origin *A* are ***G*** (4.37, 1.82) m.

Problem 6

Find the coordinates of the centroid of the area shown in Fig. 5.6(a).

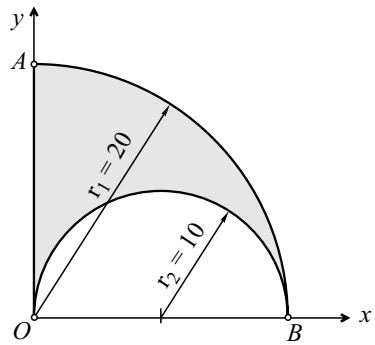

Fig. 5.6(a)

[All dimensions are in cm]

Solution

(i) Divide the given area into two subareas as shown.

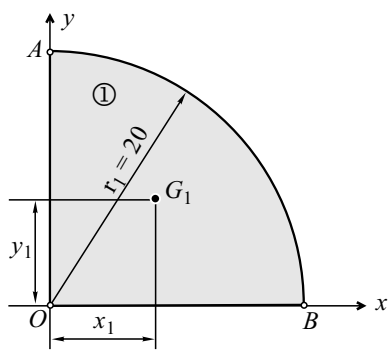

(ii) Quarter circle OAB : part ①

$$A_1 = \frac{\pi r_1^2}{4} = \frac{\pi \times 20^2}{4} = 314.16 \text{ cm}^2$$

$$x_1 = y_1 = \frac{4r_1}{3\pi} = \frac{4 \times 20}{3\pi}$$

$$\therefore x_1 = y_1 = 8.49 \text{ cm}$$

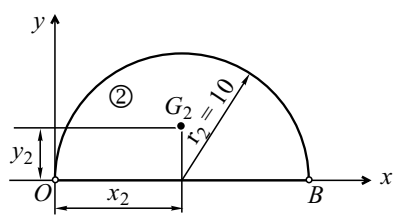

(iii) Semicircle OB : part ②

$$A_2 = \frac{\pi r_2^2}{2} = \frac{\pi \times 10^2}{2} = 157.08 \text{ cm}^2$$

$$x_2 = 10 \text{ cm}$$

$$y_2 = \frac{4r_2}{3\pi} = 4.244 \text{ cm}$$

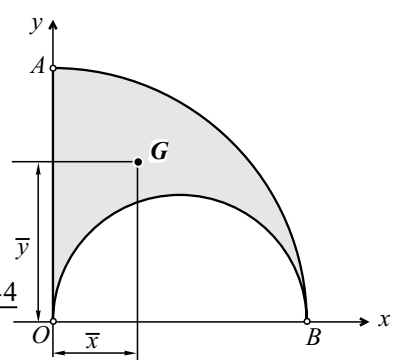

Fig. 5.6(b)

(iv) Centroid of the given shaded area is given as

$$\bar{x} = \frac{A_1 x_1 - A_2 x_2}{A_1 - A_2} = \frac{314.16 \times 8.49 - 157.08 \times 10}{314.16 - 157.08}$$

$$\bar{x} = 6.98 \text{ cm}$$

$$\bar{y} = \frac{A_1 y_1 - A_2 y_2}{A_1 - A_2} = \frac{314.16 \times 8.49 - 157.08 \times 4.244}{314.16 - 157.08}$$

$$\bar{y} = 12.74 \text{ mm}$$

$\therefore$ coordinates of centroid w.r.t. origin O are $\boldsymbol{G}$ (6.98, 12.74) cm.

Problem 7

Find the centroid of the shaded area shown in Fig. 5.7(a).

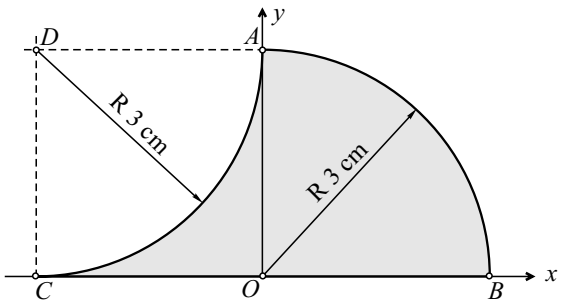

Fig. 5.7(a)

Solution

(i) Divide the area into three parts as shown.

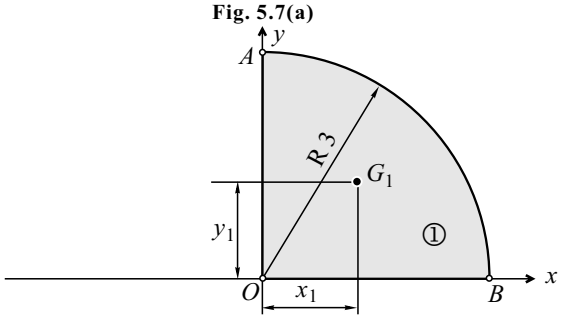

(ii) Quarter circle : part ①

$$A_1 = \frac{\pi \times 3^2}{4} = 7.07 \text{ cm}^2$$

$$x_1 = y_1 = \frac{4 \times 3}{3\pi} = 1.27 \text{ cm}$$

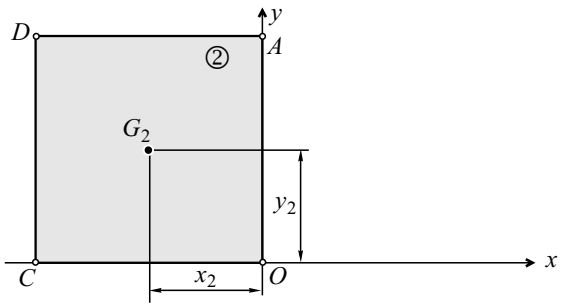

(iii) Square : part ②

$$A_2 = 3 \times 3 = 9 \text{ cm}^2$$

$$x_1 = -1.5 \text{ cm} \; ; \; y_2 = 1.5 \text{ cm}$$

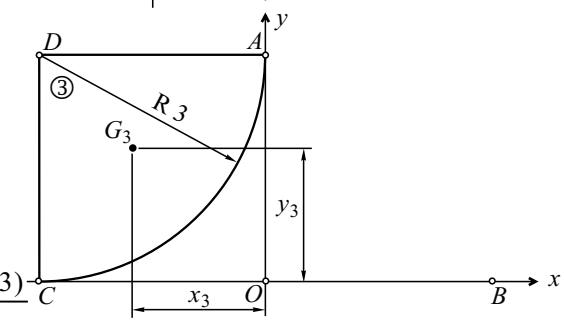

(iv) Quarter circle : part ③

$$-A_3 = -\frac{\pi \times 3^2}{4} = -7.07 \text{ cm}^2$$

$$x_3 = -\left(3 - \frac{4 \times 3}{3\pi}\right) = -1.73 \text{ cm}$$

$$y_3 = 3 - \frac{4 \times 3}{3\pi} = 1.73 \text{ cm}$$

(v) Centroid of the given shaded area is given as

$$\bar{x} = \frac{7.07 \times 1.27 + 9 \times (-1.5) + (-7.07) \times (-1.73)}{7.07 + 9 - 7.07}$$

$$\bar{x} = 0.8566 \text{ cm}$$

$$\bar{y} = \frac{7.07 \times 1.27 + 9 \times 1.5 + (-7.07) \times 1.73}{7.07 + 9 - 7.07}$$

$$\bar{y} = 1.139 \text{ cm}$$

$\therefore$ coordinates of centroid w.r.t. origin O are $\boldsymbol{G}$ (0.8566, 1.139) cm.

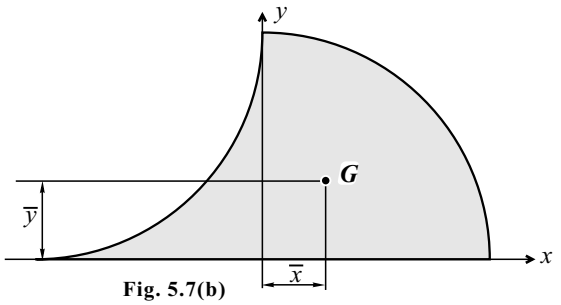

Fig. 5.7(b)

Problem 8

Determine the centroid of the shaded portion shown in Fig. 5.8(a).

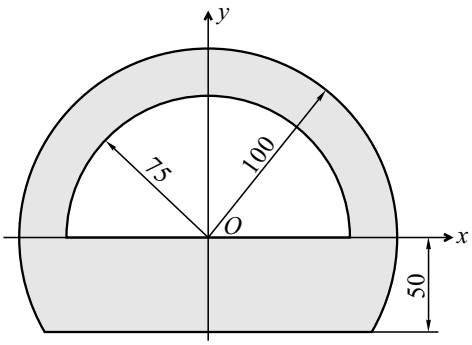

Fig. 5.8(a)

[All dimensions are in mm]

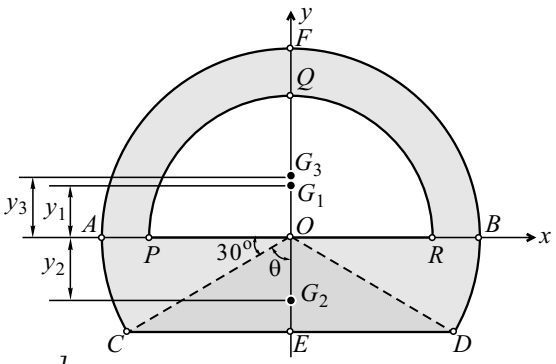

Fig. 5.8(b)

Solution

(i) The given figure is symmetric about the y-axis.

$\therefore \quad \bar{x} = 0.$

In ΔCOE, $\dfrac{OE}{OC} = \cos\theta$

$$\cos\theta = \frac{50}{100}$$

$$\therefore \ \theta = 60^\circ$$

$$\therefore \ \angle COE = 60^\circ$$

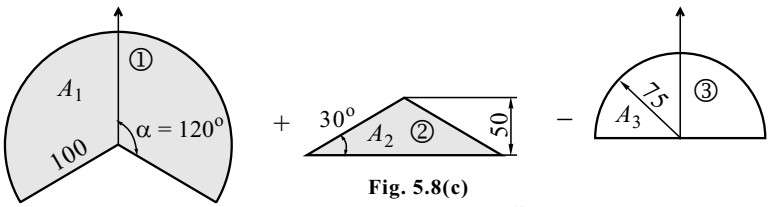

Fig. 5.8(c)

Divide the figure into three parts as shown.

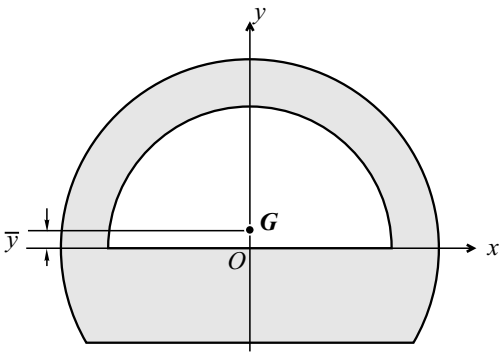

Fig. 5.8(d)

(ii) Consider $CAFBDO$: part ①

$$A_1 = \left(\frac{120 \times \pi}{180}\right) \times 100^2 = 20944 \text{ mm}^2$$

$$y_1 = \frac{2 \times 100 \sin 120}{3 \times \left(\dfrac{120 \times \pi}{180}\right)} = 27.57 \text{ mm}$$

(iii) Triangle COD : part ②

$$CE = \sqrt{100^2 - 50^2} = 86.6 \text{ mm} \ \therefore CD = 173.2 \text{ mm}$$

$$A_2 = \frac{1}{2} \times 173.2 \times 50 = 4330 \text{ mm}^2 \text{ and } y_2 = -\frac{2}{3} \times 50 = -33.33 \text{ mm}$$

(iv) Semicircle PQR : part ③

$$-A_3 = -\frac{\pi \times 75^2}{2} = -8835.73 \text{ mm}^2 \text{ and } y_3 = \frac{4 \times 75}{3\pi} = 31.83 \text{ mm}$$

(v) Coordinates of the centroid of given shaded area can be calculated as

$$\bar{y} = \frac{20944 \times 27.57 + 4330 \times (-33.33) + (-8835.73) \times 31.83}{20944 + 4330 - 8835.73} = 9.239 \text{ mm}$$

$\therefore$ coordinates of centroid w.r.t. origin O are $\boldsymbol{G}$ (0, 9.239) mm.

Problem 9

Calculate numerically the centroid of the shaded area shown in Fig. 5.9(a).

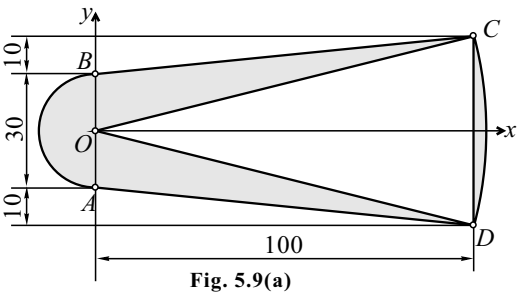

Fig. 5.9(a)

[All dimensions are in cm]

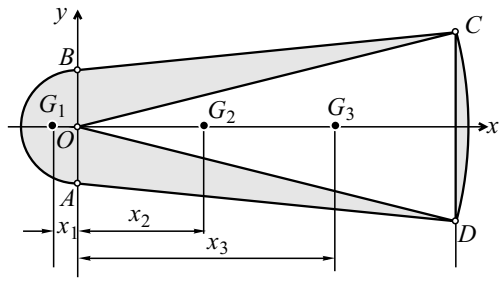

Fig. 5.9(b)

Solution

(i) The given figure is symmetric about the x-axis.

$\therefore \quad \bar{y} = 0.$

(ii) Consider semicircle : part ①

$$A_1 = \frac{\pi \times 15^2}{2} = 353.43 \text{ cm}^2$$

$$x_1 = \frac{-4 \times 15}{3\pi} = -6.37 \text{ cm}$$

(iii) Consider two equal triangles : part ②

$$2(A_2) = 2\left(\frac{1}{2} \times 15 \times 100\right) = 2(750) \text{ cm}^2$$

$$x_2 = \frac{100}{3} = 33.33 \text{ cm}$$

(iv) Consider a sector of circle : part ③

$$A_3 = 103.08^2 \times 14.04 \times \frac{\pi}{180} = 2603.71 \text{ cm}^2$$

$$x_3 = \frac{2 \times 103.08 \sin 14.04}{3 \times 14.04 \times \frac{\pi}{180}} = 68.03 \text{ cm}$$

(v) Consider triangle : part ④

$$-A_4 = -\left(\frac{1}{2} \times 50 \times 100\right) = -2500 \text{ cm}^2$$

$$x_4 = \frac{2}{3} \times 100 = 66.67 \text{ cm}$$

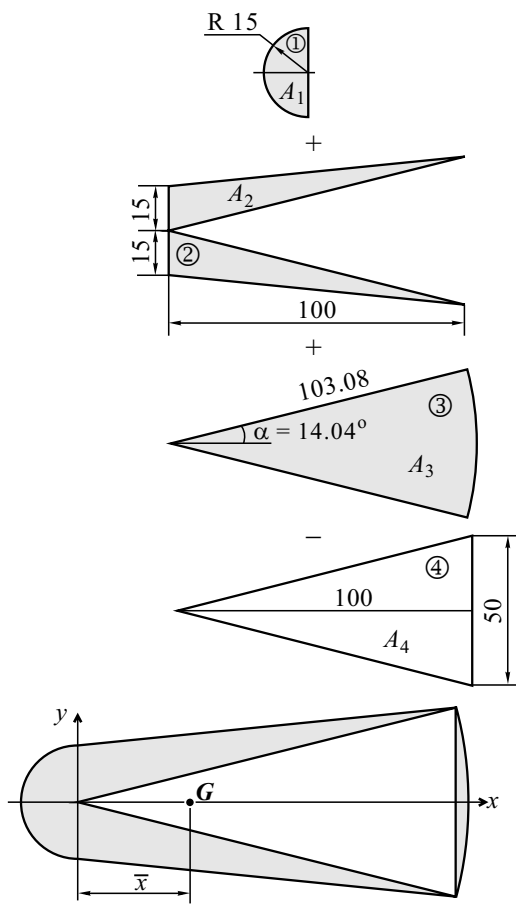

Fig. 5.9(c)

(vi) Coordinates of the centroid

$$\bar{x} = \frac{353.43 \times (-6.37) + 2(750 \times 33.33) + 2603.71 \times 68.03 + (-2500) \times (66.67)}{353.43 + 2(750) + 2603.71 - 2500} = 29.74 \text{ cm}$$

$\therefore$ coordinates of centroid w.r.t. origin O are $\boldsymbol{G}$ (29.74, 0) cm.

Problem 10

Find the coordinate of centroid of the shaded area shown in Fig. 5.10(a).

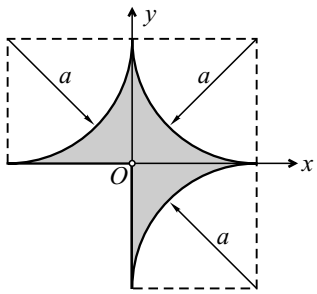

Fig. 5.10(a)

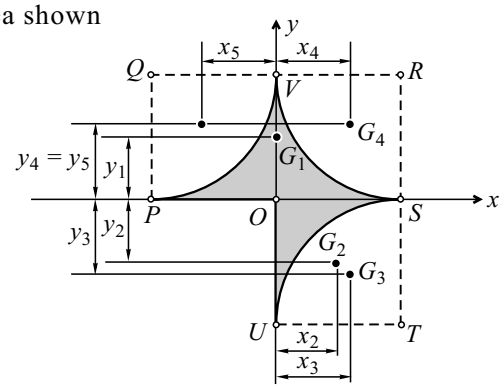

Fig. 5.10(b)

Solution

1. Dividing into 5 parts as shown below.

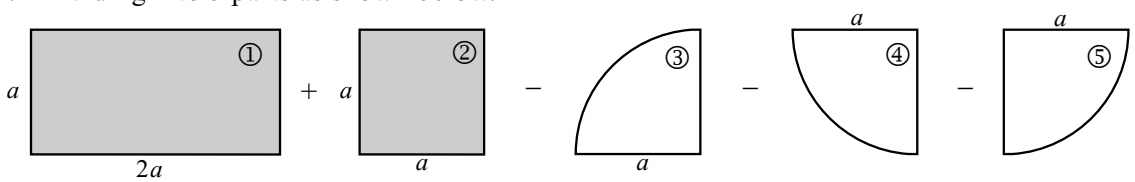

2. Rectangle *PQRS* - part ①

$A_1 = 2a \times a = 2\,a^2$; $x_1 = 0$; $y_1 = 0.5\,a$

3. Square *STUO* - part ②

$A_2 = a \times a = a^2$; $x_2 = 0.5\,a$; $y_2 = -0.5\,a$

4. Quarter circle *STU* - part ③

$$-A_3 = -\frac{\pi\,a^2}{4} = -0.785\,a^2\,;\; x_3 = a - \frac{4a}{3\pi} = 0.576\,a\,;\; y_3 = -\left(a - \frac{4a}{3\pi}\right) = -0.576\,a$$

5. Quarter circle *VRS* - part ④

$$-A_4 = -\frac{\pi\,a^2}{4} = -0.785\,a^2\,;\; x_4 = y_4 = a - \frac{4a}{3\pi} = 0.576\,a$$

6. Quarter circle *PQV* - part ⑤

$$-A_5 = -\frac{\pi\,a^2}{4} = -0.785\,a^2\,;\; x_5 = -\left(a - \frac{4a}{3\pi}\right) = -0.576\,a\,;\; y_5 = a - \frac{4a}{3\pi} = 0.576\,a$$

7. Coordinates of the centroid of given shaded area can be calculated as

$$\bar{x} = \frac{\left[\begin{array}{l} 2\,a^2 \times 0 + a^2 \times (0.5\,a) + (-0.785\,a^2) \times 0.576\,a \\ + (-0.785\,a^2) \times 0.576\,a + (-0.785\,a^2) \times (-0.576\,a) \end{array}\right]}{2\,a^2 + a^2 - 3\,(0.785\,a^2)} = 0.074\,a$$

$$\bar{y} = \frac{\left[\begin{array}{l} 2\,a^2 \times 0.5\,a + a^2 \times (-0.5\,a) + (-0.785\,a^2) \times (-0.576\,a) \\ + (-0.785\,a^2) \times 0.576\,a + (-0.785\,a^2) \times 0.576\,a \end{array}\right]}{2\,a^2 + a^2 - 3\,(0.785\,a^2)} = 0.074\,a$$

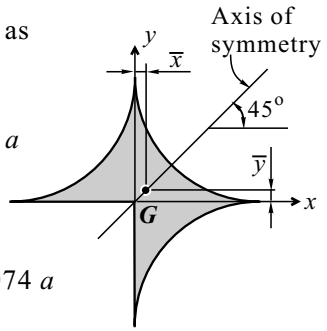

∴ Coordinates of centroid w.r.t. origin *O* are ***G*** (0.074 *a*, 0.074 *a*) cm.

Note : Axis of symmetry of given shaded area in inclined at 45° to horizontal ∴ $\bar{x} = \bar{y}$.

Problem 11

A thin homogenous semicircular plate of radius r is suspended from corner A as shown in Fig. 5.11(a). Find the angle made by its straight edge AB with the vertical.

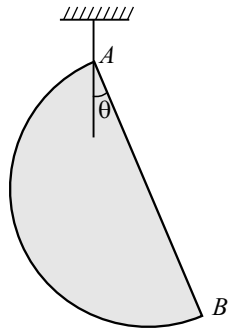

Fig. 5.11(a)

Solution

If the plate is suspended through point A then its centroid lies on the vertical line passing through A.

In ΔACG,

$$\tan\theta = \frac{\left(\frac{4r}{3\pi}\right)}{r}$$

$$\tan\theta = \frac{4}{3\pi}$$

$$\therefore\ \theta = 23^{\circ}$$

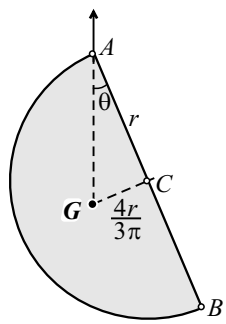

Fig. 5.11(b)

Problem 12

A thin homogenous composite plate is formed by a semicircular and triangular shape as shown in Fig. 5.12(a), freely suspended from point A. If the side BC remains horizontal in equilibrium condition, then find this side BC.

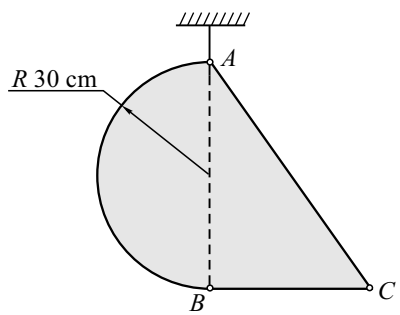

Fig. 5.12(a)

Solution

If the plate is suspended through A then its centroid lies on the vertical line passing through A.

Consider y-axis through A which passes through C.G. of the plate.

$$\therefore\ \bar{x} = 0$$

$$\bar{x} = 0 = \left(\frac{\pi \times 30^2}{2}\right)\left(\frac{-4 \times 30}{3\pi}\right) + \left(\frac{1}{2} \times l \times 60\right)\left(\frac{l}{3}\right)$$

$$\frac{-4 \times 30^3}{6} + 10\,l^2 = 0$$

$$10\,l^2 = \frac{4}{6} \times 30^3$$

$$l = 42.43 \text{ cm}$$

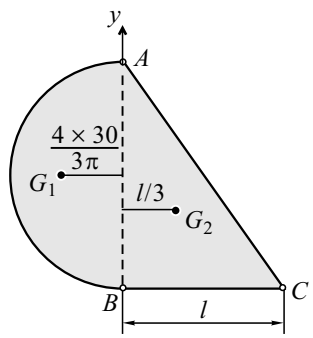

Fig. 5.12(b)

Problem 13

A right-angled lamina ABC with sides AB = 12 cm and BC = 5 cm is suspended from A as shown in Fig. 5.13(a). Find the angle made by the side AB with the horizontal through A.

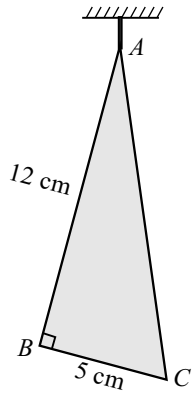

Fig. 5.13(a)

Solution

For a freely suspended plane lamina, the vertical line of suspension will contain the centroid.

Consider the right angle $\Delta\, APG$

$$\tan\alpha = \frac{PG}{AP} = \frac{5/3}{8}$$

$$\tan\alpha = 0.2083$$

$$\alpha = 11.77^{\circ}$$

(α is angle with vertical)

$\therefore$ angle of side AB with horizontal will be

$$\theta = 90 - \alpha = 90 - 11.77$$

$$\theta = 78.23^{\circ}$$

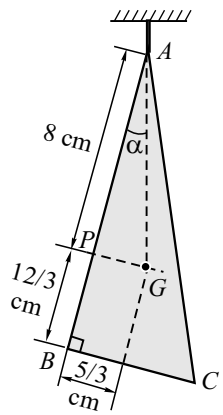

Fig. 5.13(b)

Problem 14

Find distance y so that the centroid of the given area in Fig. 5.14 has coordinates (25, 20).

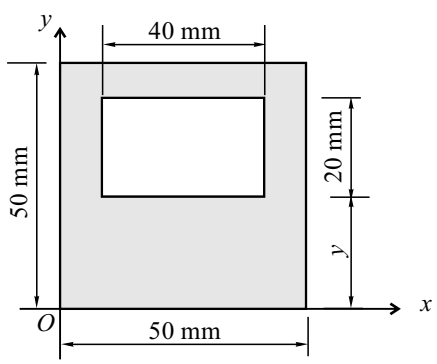

Fig. 5.14

Solution

$$\bar{y} = \frac{50 \times 50 \times 25 - 40 \times 20 \times 4(y + 10)}{50 \times 50 - 40 \times 20}$$

$$20(2500 - 800) = 2500 \times 25 - 800 \times (y + 10)$$

$$34000 = 62500 - 800y - 8000$$

$$800y = 20500$$

$$\therefore\ y = 25.625 \text{ mm}$$

Problem 15

An isosceles triangle is to be cut from one edge of a square plate of 1 m side such that the remaining part of the plate remains in equilibrium in any position when suspended from the apex of the triangle. Find the area of the triangle to be removed.

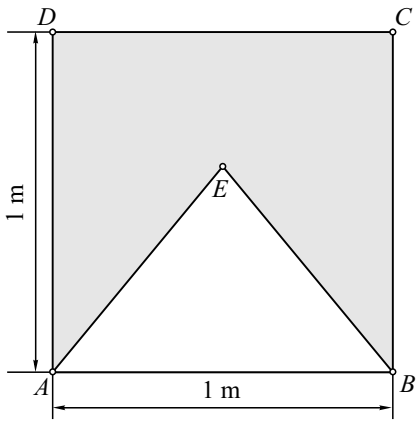

Fig. 5.15(a)

Solution

If the plane lamina is suspended exactly through the centroid then it remains in equilibrium at any position.

(i) Therefore, as per the given condition in the problem, the apex of triangle E must act as the centroid of remaining part.

Let h be the height of the triangle

$\therefore\ \bar{y} = h$

(ii) Rectangle $ABCD$: part ①

$A_1 = 1 \times 1 = 1\ \text{m}^2$

$y_1 = 0.5\ \text{m}$

(iii) Triangle ABE : part ②

$-A_2 = -\frac{1}{2} \times 1 \times h = -0.5\ h\ \text{m}^2$

$y_2 = \frac{h}{3}\ \text{m}$

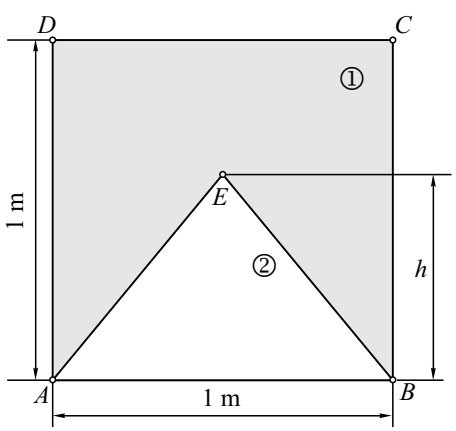

Fig. 5.15(b)

(iv) Coordinates of the centroid of given shaded area can be calculated as

$$\bar{y} = h = \frac{1 \times 0.5 - 0.5h \times \frac{h}{3}}{1 - 0.5h}$$

$$h(1 - 0.5\,h) = 0.5 - \frac{0.5h^2}{3}$$

$$h - 0.5h^2 = \frac{1.5 - 0.5h^2}{3}$$

$$3h - 1.5h^2 = 1.5 - 0.5h^2$$

$$h^2 - 3h + 1.5 = 0$$

$h = 0.634$ m or $h = 2.37$ m

$h = 0.634$ m (because h cannot be greater than 1 m)

$\therefore$ area of triangle to be removed $= \frac{1}{2} \times 1 \times 0.634 = 0.317\ \text{m}^2$

Problem 16

Determine the distance h for which the centroid of the shaded area is as high above line AA' as possible. Show that if the distance $\bar{y}$ of C.G. is maximum then $\bar{y} = h$.

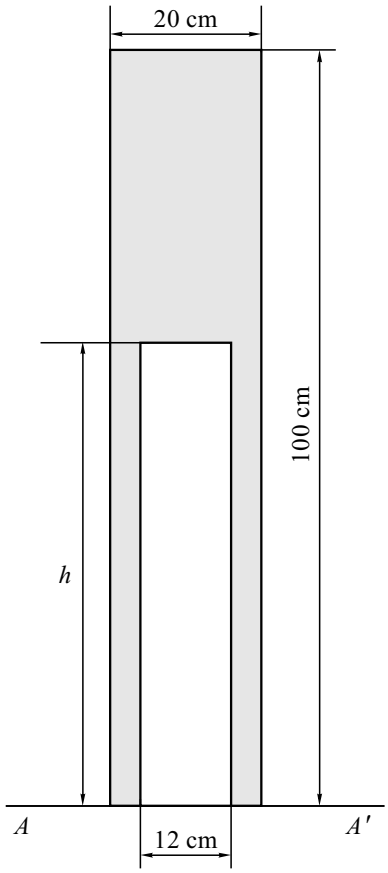

Fig. 5.16

Solution

Here, we have to find h such that $\bar{y}$ is maximum

$$\bar{y} = \frac{100 \times 20 \times 50 - 12 \times h \times 0.5\,h}{100 \times 20 - 12 \times h}$$

$$\bar{y} = \frac{100000 - 6\,h^2}{2000 - 12\,h} \qquad \text{...(I)}$$

The above expression shows $\bar{y} = f(h)$

We know for finding the maximum value of any function, it should be differentiated and then equated to zero.

$$\therefore\ \bar{y}_{max} = \frac{d\bar{y}}{dh} = 0$$

From Eq. (I),

$$\frac{(2000 - 12\,h)(-12\,h) - (100000 - 6\,h^2)(-12)}{(2000 - 12\,h)^2} = 0$$

$$-24000\,h + 144\,h^2 + 1200000 - 72\,h^2 = 0$$

$$72\,h^2 + 12 \times 10^5 - 24000\,h = 0 \qquad \text{(Dividing by 12)}$$

$$6\,h^2 - 2000\,h + 10^5 = 0$$

Solving the quadratic equation, we get

$h = 61.26$ cm or $h = 272.08$ cm

$h = 61.26$ cm (because h cannot be greater than 100 cm)

Now, we have to show that if the distance $\bar{y}$ of C.G. is maximum then $\bar{y} = h$.

$$\therefore\ \bar{y} = h = \frac{100 \times 20 \times 50 - 12 \times h \times 0.5\,h}{100 \times 20 - 12 \times h}$$

$$h = \frac{10^5 - 6\,h^2}{2000 - 12\,h}$$

$$2000\,h - 12\,h^2 = 10^5 - 6\,h^2$$

$$6\,h^2 - 2000\,h + 10^5 = 0$$

Solving the quadratic equation, we get

$\therefore\ h = 61.26$ cm

SUMMARY

- **Centre of Gravity :** It is a point where the whole weight of the body is assumed to act.
- **Centroid :** It is a point where the whole area of a plane lamina (figure) is assumed to act.

  Points to Remember

  1. Centroid is the geometrical centre of a figure.
  2. For a symmetric figure, centroid lies on the axis of symmetry.
  3. If the figure is symmetric about x-axis then y coordinate of C.G., i.e., $\bar{y} = 0$.
  4. If the figure is symmetric about y-axis then x coordinate of C.G., i.e., $\bar{x} = 0$.
  5. If a figure has more than one axis of symmetry then the intersection of axis of symmetry is the centroid of the given figure.
  6. Centroid may or may not lie on the given figure.
  7. If axis of symmetry is inclined at 45° to horizontal line then $\bar{x} = \bar{y}$.
- **Freely Suspended Plane Lamina in Equilibrium :** The centroid or centre of gravity will lie vertically below the point of suspension. On the other hand, if a plane lamina is freely suspended exactly through the centroid or centre of gravity point, it will remain in equilibrium at any position.

- **Centroid of Various Geometrical Shape**

1. Rectangle

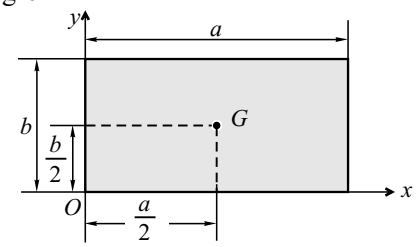

3. Isosceles/Equilateral Triangle

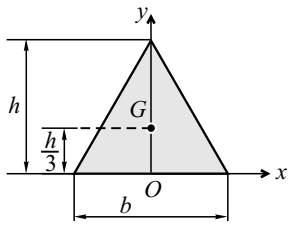

2. Right-angled Triangle

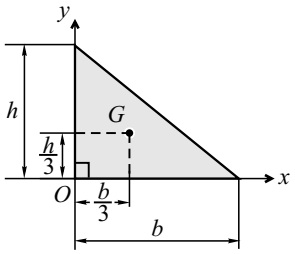

4. Triangle

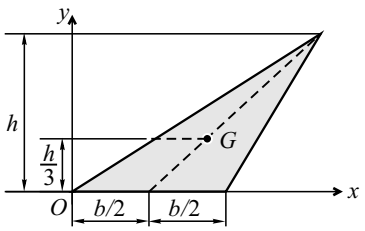

5. Semicircle

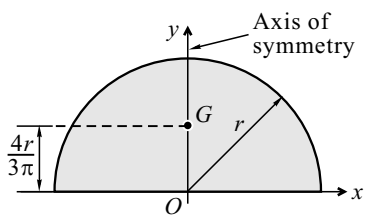

6. Quarter Circle

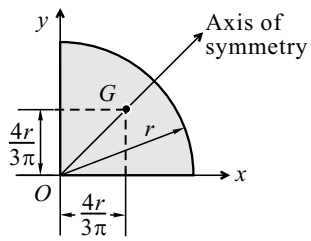

7. Circular Sector

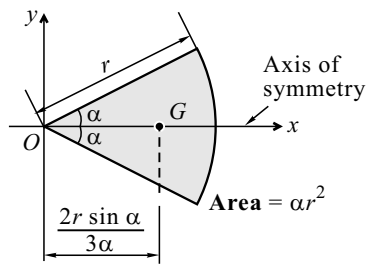

♦ **Procedure to Locate Centroid of Composite Area**

1. Place the given figure into the first quadrant touching the outer edge of figure to the axis selected, if the axes are not given.
2. Divide the given composite figure into standard geometrical shapes such as rectangle, triangle, circle, semicircle, quarter circle, sector of circle, etc.
3. Mark the centroids G_1, G_2, ..., etc., on the composite figure and find their coordinates w.r.t. the given axes, i.e., x_1, x_2, ..., etc., and y_1, y_2, ..., etc.
4. Find the coordinates of centroid using the following equations:

$$\bar{x} = \frac{\Sigma A_i x_i}{\Sigma A_i} = \frac{A_1 x_1 + A_2 x_2 + ... + A_n x_n}{A_1 + A_2 + ... + A_n}$$

$$\bar{y} = \frac{\Sigma A_i y_i}{\Sigma A_i} = \frac{A_1 y_1 + A_2 y_2 + ... + A_n y_n}{A_1 + A_2 + ... + A_n}$$

EXERCISES

[I] Problems

Find the centroids of the following shaded plane areas shown in **1** to **15**. *[All dimensions are in mm]*

1.

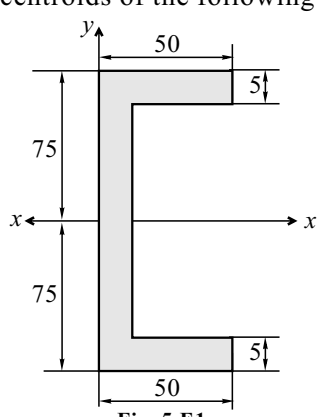

Fig. 5.E1

[***Ans.*** $\bar{x}$ = 11.875 mm and $\bar{y}$ = 0]

2.

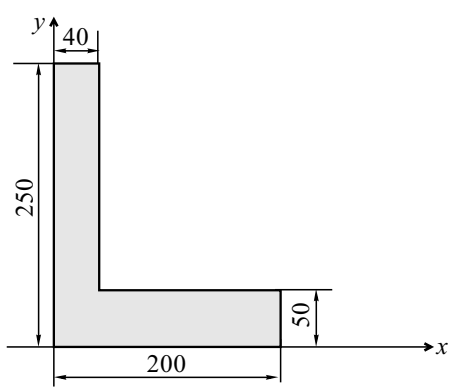

Fig. 5.E2

[***Ans.*** $\bar{x}$ = 64.4 mm and $\bar{y}$ = 80.5 mm]

3.

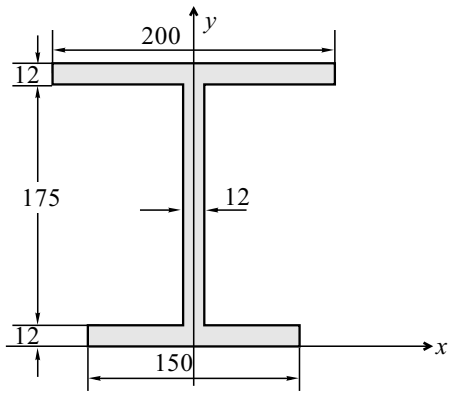

Fig. 5.E3

[***Ans.*** $\bar{x} = 0$ and $\bar{y} = 108.4$ mm]

4.

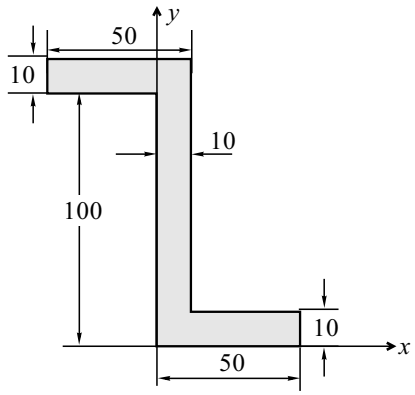

Fig. 5.E4

[***Ans.*** $\bar{x} = 5$ mm and $\bar{y} = 55$ mm]

5.

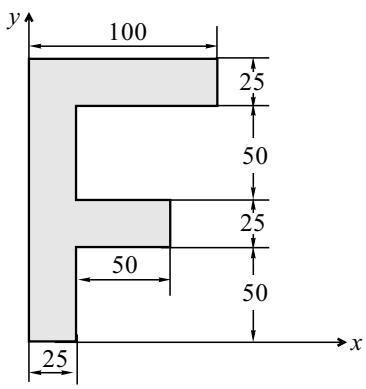

Fig. 5.E5

[***Ans.*** $\bar{x} = 32.95$ mm and $\bar{y} = 89.77$ mm]

6.

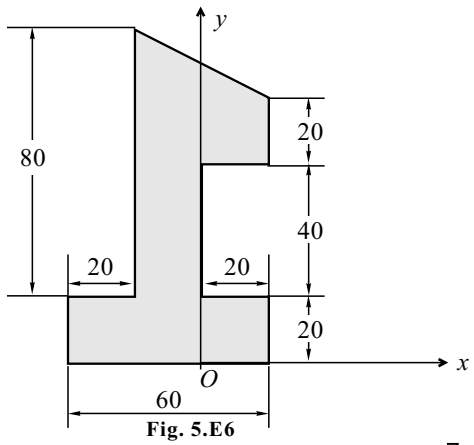

Fig. 5.E6

[***Ans.*** $\bar{x} = -7.1$ mm and $\bar{y} = 42.1$ mm]

7.

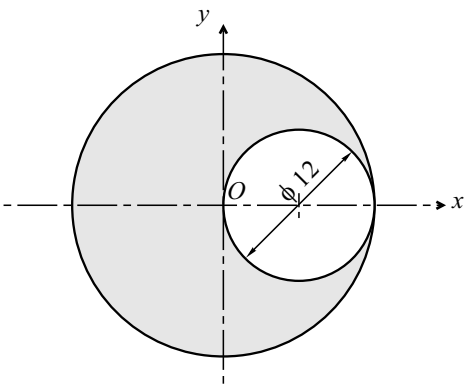

Fig. 5.E7

[***Ans.*** $\bar{x} = -2$ mm and $\bar{y} = 0$]

8.

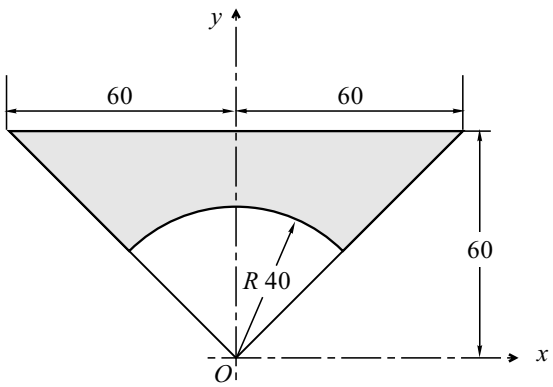

Fig. 5.E8

[***Ans.*** $\bar{x} = 0$ and $\bar{y} = 48.6$ mm]

9.

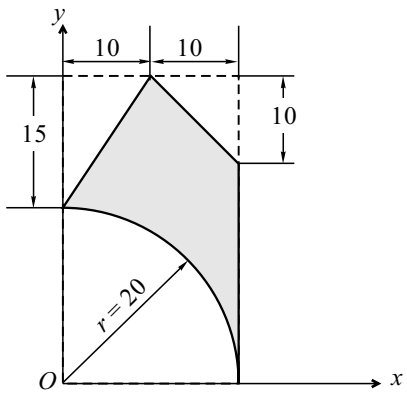

Fig. 5.E9

[***Ans.*** $\bar{x}$ = 12.46 mm and $\bar{y}$ = 22.04 mm]

10.

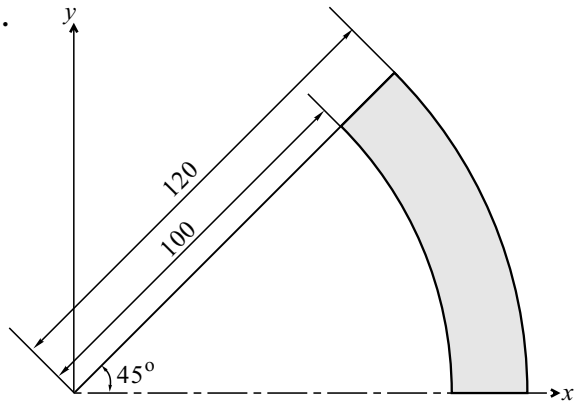

Fig. 5.E10

[***Ans.*** $\bar{x}$ = 99.3 mm and $\bar{y}$ = 41.13 mm]

11.

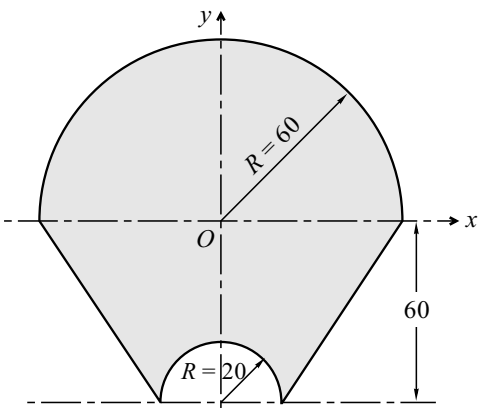

Fig. 5.E11

[***Ans.*** $\bar{x}$ = 0 mm and $\bar{y}$ = 5.8 mm]

12.

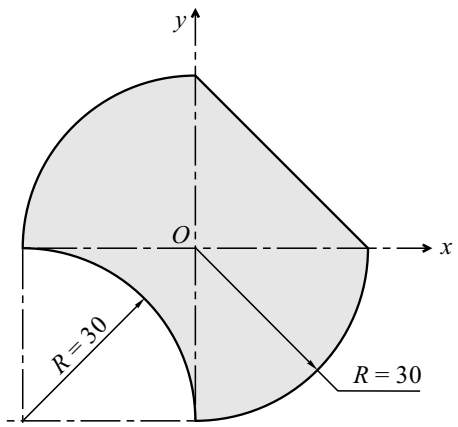

Fig. 5.E12

[***Ans.*** $\bar{x}$ = $\bar{y}$ = 1.563 mm]

13.

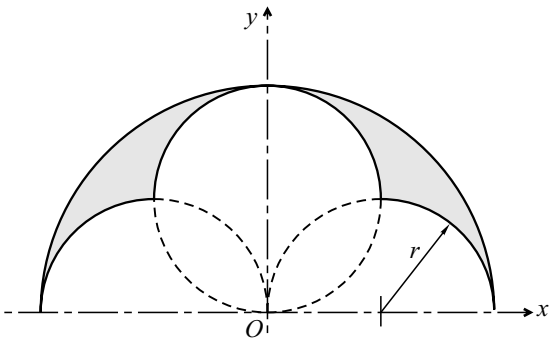

Fig. 5.E13

[***Ans.*** $\bar{x}$ = 0 and $\bar{y}$ = 1.25 r]

14.

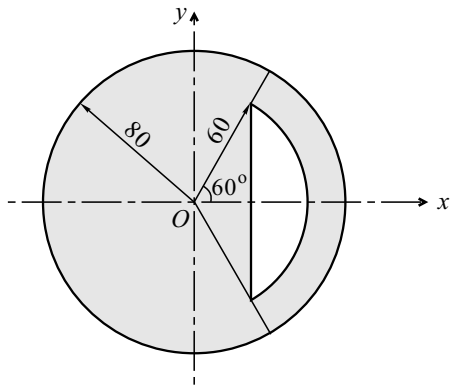

Fig. 5.E14

[***Ans.*** $\bar{x}$ = −5.23 mm and $\bar{y}$ = 0]

15.

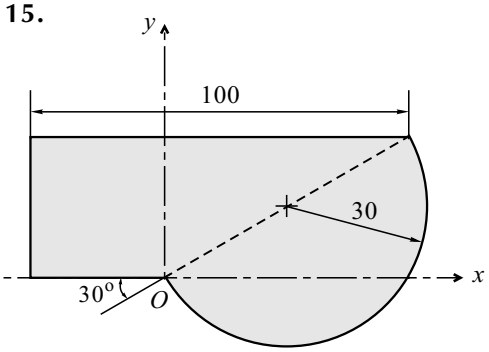

Fig. 5.E15

[***Ans.*** $\bar{x} = 6.76$ mm and $\bar{y} = 11.79$ mm]

16. If the dimensions of a and b of the plane figure shown in Fig. 5.E16 are fixed, what should be the dimension of c in order that the centroid of the shaded area will lie on the line AB ?

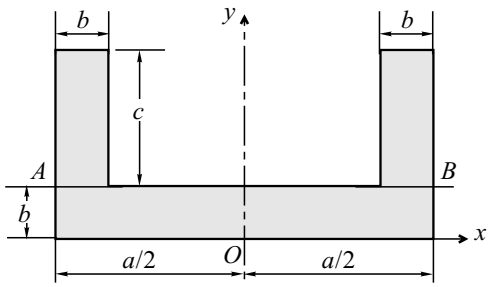

Fig. 5.E16

[***Ans.*** $c = \sqrt{ab/2}$]

17. Prove that the centroid of the shaded area, in Fig. 5.E17, with respect to the x and y axes is given by

$$\bar{x} = \frac{\frac{2}{3} r \sin^3 \alpha}{\left(\alpha - \frac{\sin 2\alpha}{2}\right)}$$

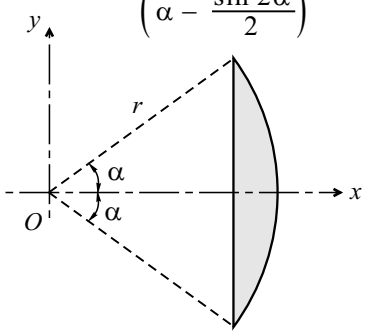

Fig. 5.E17

18. A plane lamina is hung freely from point D in Fig. 5.E18. Find the angle made by BD with the vertical.

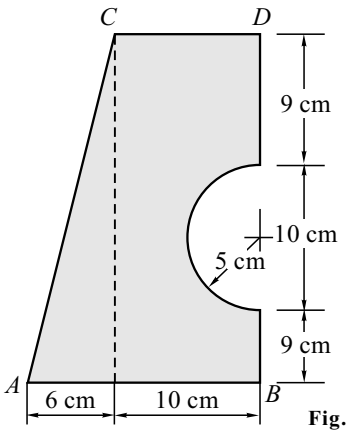

Fig. 5.E18

[***Ans.*** $\theta = 29.62°$]

[II] Review Questions

1. Define centre of gravity.
2. Define centroid.
3. Derive an equation for centroids of the following areas:
   (a) Triangle (b) Semicircle (c) Quarter circle (d) Sector of a circle
4. Derive an equation for centre of gravity of a bent wire of the following shapes:
   (a) Semicircular (b) Quarter circular (c) Arc of circle
5. Describe the method of finding centroids of composite areas.

[III] Fill in the Blanks

1. For a freely suspended bent wire in equilibrium, the _____ will lie vertically below the point of suspension.

2. Median of any triangle contains the _____ of that triangle.

3. The centroid of equilateral triangle with each side s from any of the three sides will be at _____ distance.

4. If the figure is symmetric about the y-axis then $\bar{x}$ = _____.

5. Centroid of semicircle on symmetry lies _____ distance from diameter.

[IV] Multiple-choice Questions

Select the appropriate answer from the given options.

1. A point at which whole weight of the body is suppose to be concentrated is called _____.

(a) moment of inertia **(b)** moment centre **(c)** centre of mass **(d)** centre of gravity

2. Centroid _____ lie on the given figure.

(a) must **(b)** must not **(c)** may or may not **(d)** None of these

3. If axis of symmetry is inclined at 45° to the horizontal then _____.

(a) $\bar{x} = 0$ **(b)** $\bar{y} = 0$ **(c)** $\bar{x} = \bar{y} = 0$ **(d)** $\bar{x} = \bar{y}$

4. Centroid of a quarter circular area is _____.

(a) $\bar{x} = \frac{4r}{3\pi}$ **(b)** $\bar{y} = \frac{4r}{3\pi}$ **(c)** $\bar{x} = \bar{y} = \frac{4r}{3\pi}$ **(d)** None of these

5. Centroid of a sector of a circle is given by the relation _____.

(a) $\frac{2r \sin \alpha}{3\alpha}$ **(b)** $\frac{r \sin \alpha}{3\alpha}$ **(c)** $\frac{2r \sin \alpha}{\alpha}$ **(d)** $\frac{3r \sin \alpha}{2\alpha}$

CHAPTER

6

TRUSSES

Learning Objectives

After reading this chapter, you will be able to answer the following questions:

- *What are trusses?*
- *What are the applications of trusses?*
- *What are the different types of trusses?*
- *What is a perfect truss and what are its assumptions?*
- *How are trusses analysed by joint method?*
- *How are trusses analysed by section method?*
- *How can you identify zero-force member?*

6.1 INTRODUCTION

A ***truss*** *is a structure that is made of straight slender bars joined together at their ends by frictionless pins to form a pattern of triangle*. The loads act only at joints and not on the members. Thus, every member of a truss is identified as a two-force member.

Applications : Trusses are usually designed to transmit forces over relatively long spans, common examples being bridge trusses, roof trusses, transmission towers, etc.

Transmission Tower

Bridge

Eiffel Tower

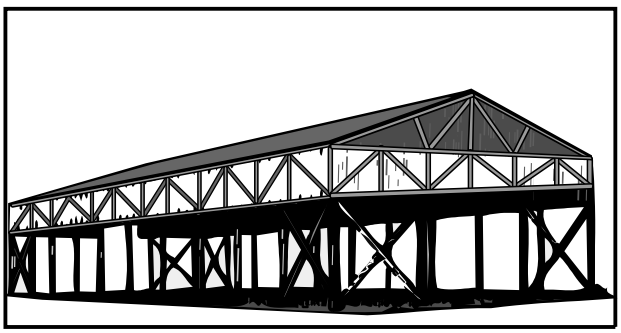

Roof

Fig. 6.1-i : Applications of Truss

6.2 TYPES OF TRUSSES

Some common types of trusses are shown in Fig. 6.2-i.

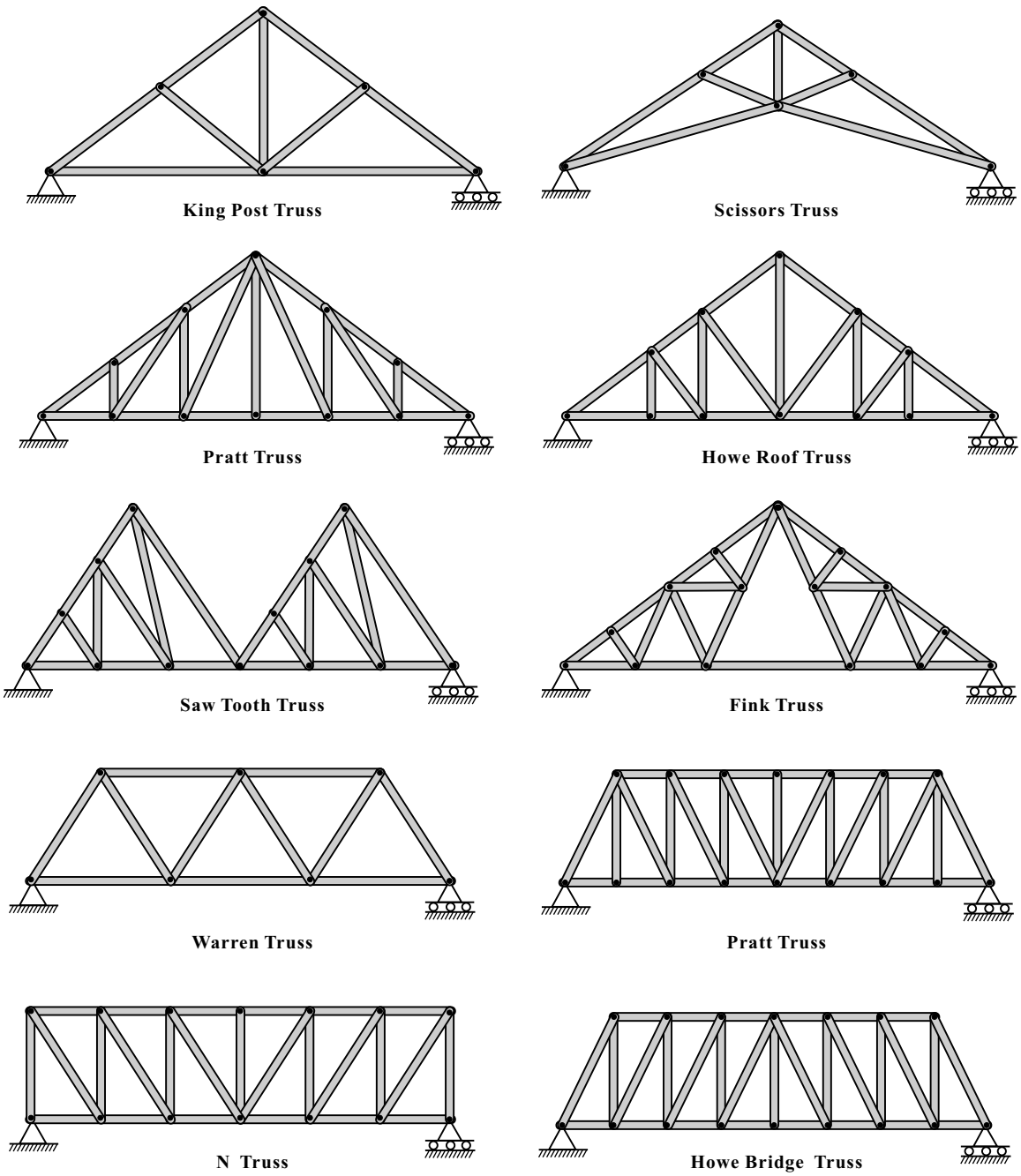

Fig. 6.2-i : Common Types of Trusses

Types of Trusses
- Perfect Truss
- Imperfect Truss
  - Deficient Truss
  - Redundant Truss

6.2.1 Perfect Truss

A pin jointed truss which has got just sufficient number of members to resist the load without undergoing any deformation in shape is called a ***perfect truss***.

Triangular frame is the simplest perfect truss and has three joints and three members.

It may be observed that to increase one joint in a perfect truss two more members are required. Hence, the following expression may be written down as the relationship between the number of members *m,* number of joints *j* and number of support reaction components *r.*

$$m = 2j - r \qquad \text{...(6.1)}$$

Example 1

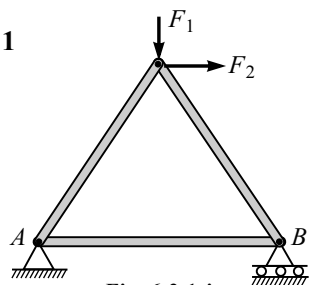

Fig. 6.2.1-i

Here, members $m = 3$, joints $j = 3$, and reactions $r = 3$ (i.e., H_A, V_A and R_B).

$$m = 2j - r$$
$$3 = 2 \times 3 - 3 \Rightarrow 3 = 3$$

Example 2

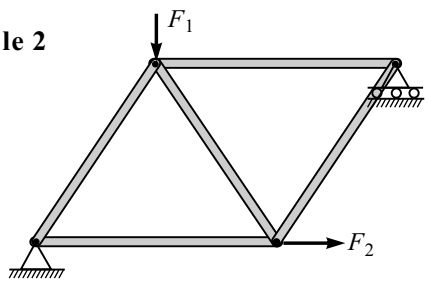

Fig. 6.2.1-ii

Here, members $m = 5$, joints $j = 4$, and reactions $r = 3$.

$$m = 2j - r$$
$$5 = 2 \times 4 - 3 \Rightarrow 5 = 5$$

Example 3

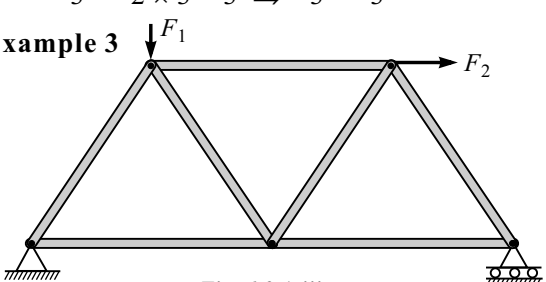

Fig. 6.2.1-iii

Here, members $m = 7$, joints $j = 5$, and reactions $r = 3$.

$$m = 2j - r$$
$$7 = 2 \times 5 - 3 \Rightarrow 7 = 7$$

Example 4

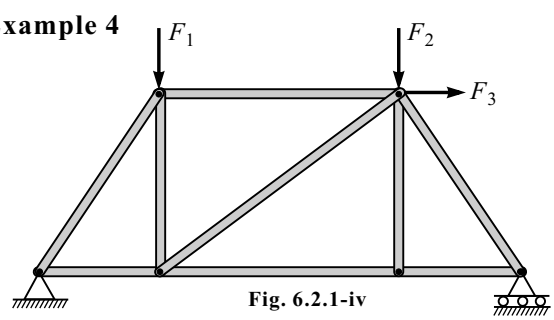

Fig. 6.2.1-iv

Here, members $m = 9$, joints $j = 6$, and reactions $r = 3$.

$$m = 2j - r$$
$$9 = 2 \times 6 - 3 \Rightarrow 9 = 9$$

A truss which satisfies the relation $m = 2j - r$ is called a *perfect truss*. Figures 6.2.1-i, ii, iii and iv are examples of perfect truss. Perfect truss can be completely analysed by static equilibrium condition. Therefore, it is also called a *determinate structure*.

6.2.2 Imperfect Truss

A truss which does not satisfy the relation $m = 2j - r$ is called an ***imperfect truss***.
Following are two subimperfect trusses.

1. **Imperfect Deficient Truss :** A truss which satisfies the relation $m < 2j - r$ is called a *deficient truss*. It is unstable and may collapse under external forces.

Example

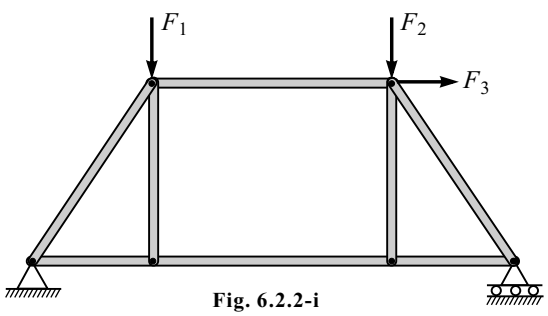

Fig. 6.2.2-i

Here, members $m = 8$, joints $j = 6$ and reactions $r = 3$.

$$m = 2j - r$$
$$8 = 2 \times 6 - 3$$
$$8 \neq 9$$
$$8 < 9$$

i.e., $m < 2j - r \Rightarrow$ deficient truss

2. **Imperfect Redundant Truss :** A truss which satisfies the relation $m > 2j - r$ is called a *redundant truss*. It is an over rigid truss. It cannot be completely analysed by static equilibrium condition. Therefore, it is an indeterminate structure.

Example

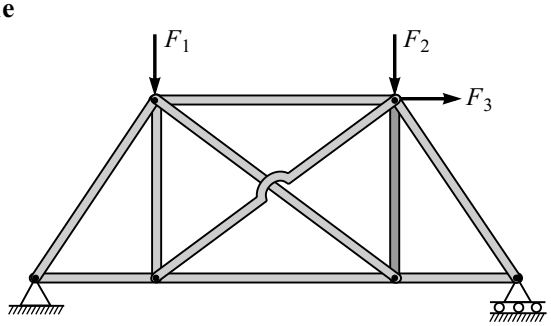

Fig. 6.2.2-ii

Here, members $m = 10$, joints $j = 6$ and reactions $r = 3$.

$$m = 2j - r$$
$$10 = 2 \times 6 - 3$$
$$10 \neq 9$$
$$10 > 9$$

i.e., $m > 2j - r \Rightarrow$ redundant truss

Assumptions for a Perfect Truss

1. All the members of a truss are straight and connected to each other at their ends by frictionless pins.
2. All loading (external forces) on truss are acting only at pins.
3. All the members are assumed to be weightless.
4. All the members of truss and external forces acting at pins lies in same plane.
5. Static equilibrium condition is applicable for analysis of a perfect truss.
   (i.e., $\Sigma F_x = 0$, $\Sigma F_y = 0$ and $\Sigma M = 0$).

6.3 TWO-FORCE MEMBER CONCEPT

The previous assumption that all the members of a truss are straight, connected to each other at their ends by frictionless pins and no external force is acting in between their joint, identifies each truss member as a two-force member which may be in tension or compression.

Consider a simply supported truss as shown in Fig. 6.3-i(a) while Fig. 6.3-i(b) shows the F.B.D. of pin *C*.

Tensile force is represented by an arrow drawn away from the pin.

Compressive force is represented by an arrow drawn towards the pin.

The two common techniques for computing the internal forces in a truss are the *method of joints* and the *method of sections*, each of which is discussed in the following articles.

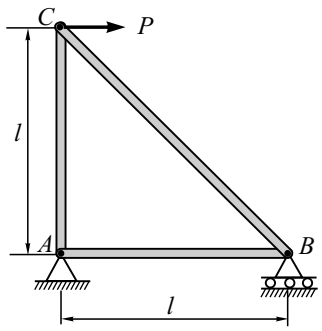

Fig. 6.3-i(a)

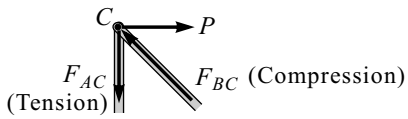

Fig. 6.3-i(b) : F.B.D. of Pin *C*

6.4 METHOD OF JOINTS

Procedure for Method of Joints

1. For simply supported truss, consider the F.B.D. of the entire truss. Applying condition of equilibrium (i.e., $\Sigma F_x = 0$, $\Sigma F_y = 0$ and $\Sigma M = 0$) find support reactions.
2. Consider the F.B.D. of joint (pin) from the truss at which not more than two members with unknown force exists.
3. Assume the member to be in tension or compression by simple inspection and applying condition of equilibrium (i.e., $\Sigma F_x = 0$ and $\Sigma F_y = 0$) to find the answers.
4. The assumed sense can be verified from the obtained numerical results. A positive answer indicates that the sense is correct, whereas a negative answer indicates that the sense shown on the F.B.D. must be changed.
5. Select the new F.B.D. of the joint with not more than two unknowns in a member and repeat points 3, 4 and 5 for complete analysis.
6. Tabulate the answer representing the member, magnitude of force and their nature.

Analysis in Method of Joints

While using the method of joints to calculate the forces in the member of truss, the equilibrium equations are applied to individual joints (or pins) of the truss. Because the members are two-force members, the F.B.D. of a joint forms concurrent force system.

Consequently, two independent equilibrium equations (i.e., $\Sigma F_x = 0$ and $\Sigma F_y = 0$) are available for each joint.

To illustrate this method of analysis, consider the truss shown in Fig. 6.4-i(a).

Observe the F.B.D. of pin C shown in Fig. 6.4-i(b) having three forces, one known and two unknown. We have two equations $\Sigma F_x = 0$ and $\Sigma F_y = 0$, so force in member F_{BC} and force in member F_{AC} can be calculated.

$$\Sigma F_x = 0$$

$$2000 - F_{BC} \cos 45^\circ = 0$$

$$F_{BC} = 2828.43 \text{ N (Compression)}$$

$$\Sigma F_y = 0$$

$$F_{BC} \sin 45^\circ - F_{AC} = 0$$

$$F_{AC} = 2000 \text{ N (Tension)}$$

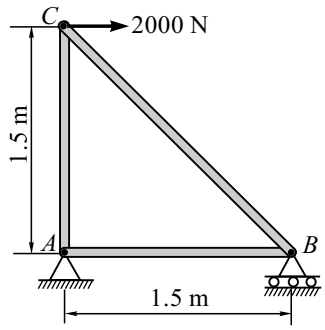

Fig. 6.4-i(a)

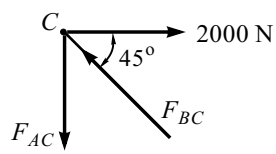

Fig. 6.4-i(b) : F.B.D. of Pin *C*

Note : Observe the F.B.D. of joint C, where the 2000 N horizontal external force is acting towards right, by simple inspection we can assume F_{BC} in compression because its horizontal component will act towards left to balance 2000 N. Now try to inspect F_{AC}, it should be in tension because vertical component of F_{BC} is upward so to balance it F_{AC} should act in vertical downward direction.

Special Conditions

1. **Identification of zero force member simply by inspection (without calculation) :** If any joint is identified without external force (load) acting on it such that joint is formed by three members and two of them are collinear, then the third non-collinear member should be identified as a zero force member.

Example 1

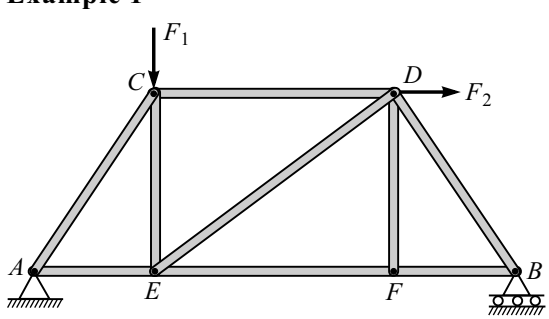

Fig. 6.4-ii(a)

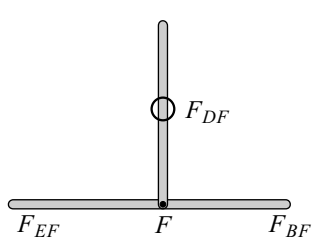

Fig. 6.4-ii(b) : Joint *F*

Observe the joint F shown in Fig. 6.4-ii(b). Forces in members EF and BF are going to balance each other (irrespective of tension or compression) because they are collinear. The third non-collinear member DF is identified as zero-force member.

i.e., $F_{EF} = F_{BF}$ because they are collinear, and

$$F_{DF} = 0$$

Example 2

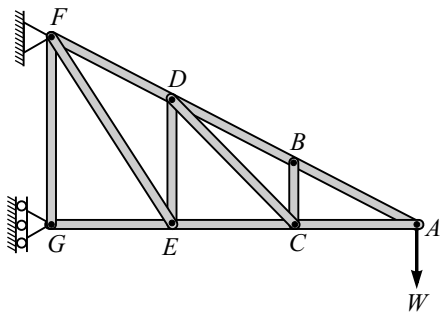

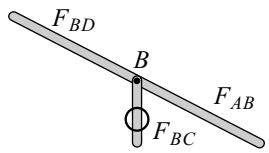

Joint *B*

$F_{BD} = F_{AC}$ because they are collinear, and

$F_{BC} = 0$

If any joint is formed by three members such that two are collinear and no external force is acting at that joint then the third non-collinear member is identified as a zero-force member without any calculation. Now considering $F_{BC} = 0$ observe the joint C, member CE and AC are collinear therefore member CD should also be identified as a zero-force member $F_{CD} = 0$. On similar condition we have $F_{DE} = F_{EF} = 0$.

2. If any joint is formed by two non-collinear members without any external force acting on it then both the members are identified as zero-force members.

Example 1

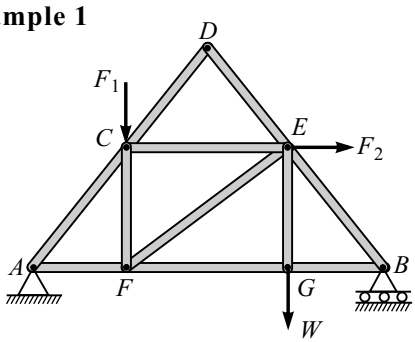

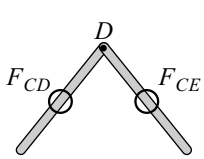

$F_{CD} = F_{DE} = 0$

Joint *D*

Consider joint D we have, $F_{CD} = F_{DE} = 0$

Example 2

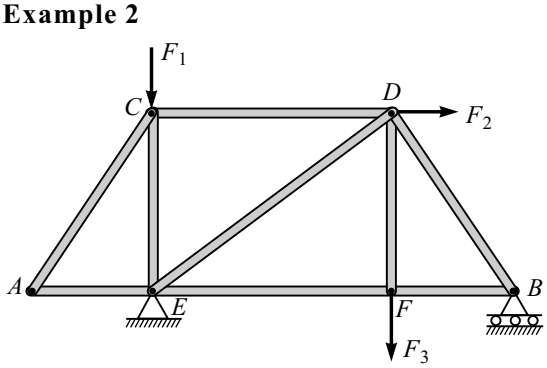

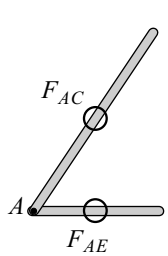

Joint *A*

Observe joint A, $F_{AC} = F_{AE} = 0$

3. If any joint is formed such that only four forces are acting and are collinear in pairs then each of the collinear forces is equal.

Example

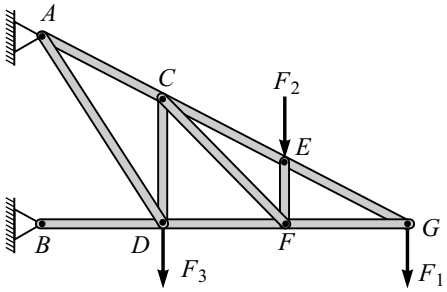

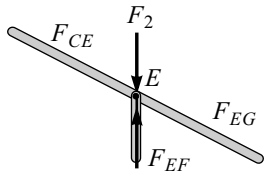

Joint *E*

Observe joint E, $F_2 = F_{EF}$ and $F_{CE} = F_{EG}$

4. If a given truss is symmetrical in geometry as well as in loading and support then support reactions are symmetrical and forces in members on half side of symmetric is equal to the forces in members on the other half.

Example

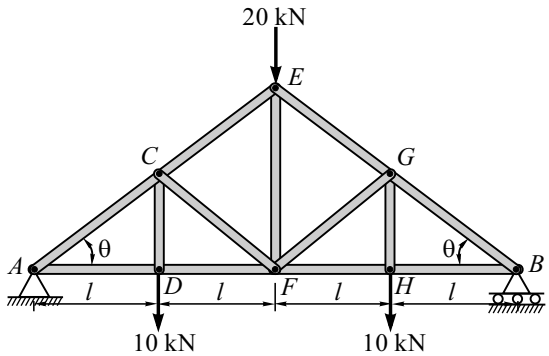

Observe the truss in the given figure.

Vertical load is 10 + 20 + 10 = 40 kN.

$\therefore\ R_A = R_B = 20$ kN (↑)

$F_{AC} = F_{BG}$, $F_{AD} = F_{BH}$, $F_{CD} = F_{GH}$,

$F_{CE} = F_{EG}$, $F_{DF} = F_{HF}$ and $F_{CF} = F_{GF}$.

5. Cantilever Truss : In a cantilever truss, support reactions are not required for the analysis of truss. Analysis can be started from the extreme end of the truss.

Example

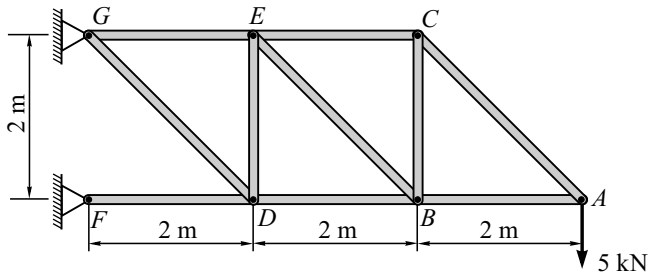

Consider the F.B.D. of joint A

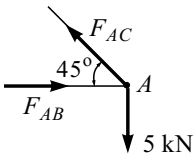

Consider the F.B.D. of joint C

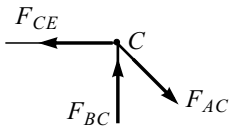

Consider the F.B.D. of joint B. So on of all the joints.

Solved Problems on Method of Joints

Problem 1

Find the force and its nature in member AD and BC for given cantilever truss loaded by 40 kN as shown (AB = 4 m and AD = 5 m) in Fig. 6.1(a).

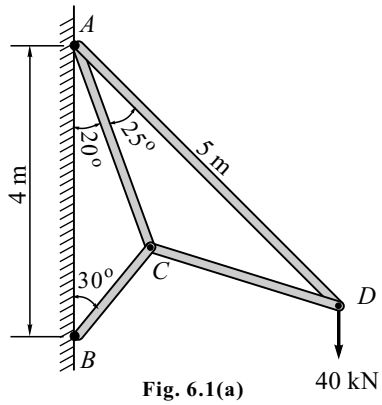

Fig. 6.1(a)

Solution

(i) For the given cantilever truss, we can start by considering the F.B.D. of joint D. But before this we should workout the geometrical angles.

In $\Delta\, ABC$

By sine rule, we have

$$\frac{AB}{\sin 130^\circ} = \frac{AC}{\sin 30^\circ}$$

$$AC = 2.61 \text{ m}$$

In $\Delta\, ACD$

By cosine rule, we have

$$CD = \sqrt{(AC)^2 + (AD)^2 - 2(AC)(AD)\cos 25^\circ}$$

$$CD = \sqrt{(2.61)^2 + (5)^2 - 2(2.61)(5)\cos 25^\circ}$$

$$CD = 2.86 \text{ m}$$

In $\Delta\, ACD$, by sine rule, we have

$$\frac{CD}{\sin 25^\circ} = \frac{AC}{\sin \alpha}$$

$$\frac{2.86}{\sin 25^\circ} = \frac{2.61}{\sin \alpha} \qquad \therefore\ \alpha = 22.69^\circ$$

By geometry $\alpha + \beta = 45^\circ \qquad \therefore\ \beta = 22.31^\circ$

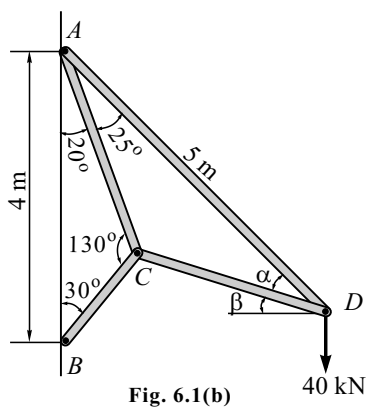

Fig. 6.1(b)

(ii) Consider the F.B.D. of Joint *D*

By Lami's theorem,

$$\frac{40}{\sin 22.69^\circ} = \frac{F_{AD}}{\sin (90 + 22.31)^\circ} = \frac{F_{CD}}{\sin (180 + 45)^\circ}$$

$\therefore\ F_{AD} = 95.93$ kN (T)

$F_{CD} = -73.32$ kN (Wrong assumed direction)

$\therefore\ F_{CD} = 73.32$ kN (C)

$\Sigma F_y = 0$

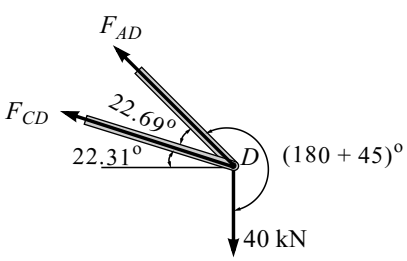

Fig. 6.1(c) : F.B.D. of *D*

(iii) Consider the F.B.D. of Joint *C*

By Lami's theorem,

$$\frac{F_{CD}}{\sin 130^\circ} = \frac{F_{BC}}{\sin (20 + 90 + 22.31)^\circ}$$

$\therefore\ F_{BC} = 70.78$ kN (C)

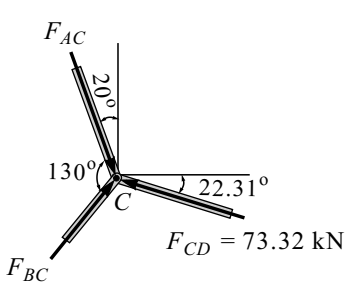

Fig. 6.1(d) : F.B.D. of *C*

Problem 2

Find the forces in the members *DF*, *DE*, *CE* and *EF* by method of joints only for the pin jointed frame shown in Fig. 6.2(a).

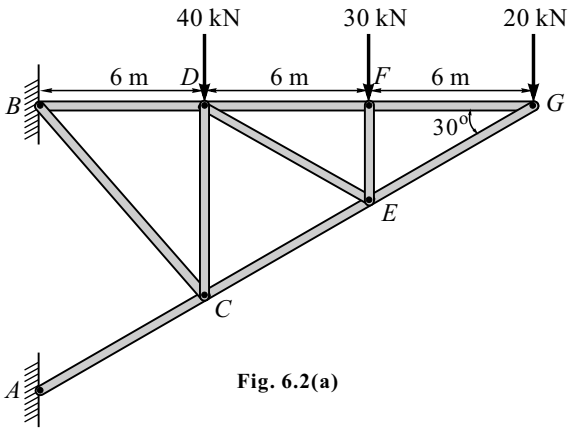

Fig. 6.2(a)

Solution

(i) Consider the F.B.D. of Joint *G*

$\Sigma F_y = 0$

$-20 + F_{EG} \sin 30^\circ = 0$

$\therefore F_{EG} = 40$ kN (C)

$\Sigma F_x = 0$

$-F_{GF} + F_{EG} \cos 30^\circ = 0$

$\therefore F_{GF} = 34.64$ kN (T)

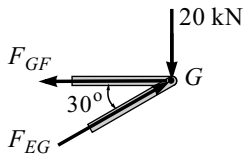

Fig. 6.2(b) : F.B.D. of *G*

(ii) Consider the F.B.D. of Joint *F*

$\Sigma F_x = 0$

$F_{GF} - F_{DF} = 0$

$\therefore F_{DF} = 34.64$ kN (T)

$\Sigma F_y = 0$

$-30 + F_{EF} = 0$

$\therefore F_{EF} = 30$ kN (C)

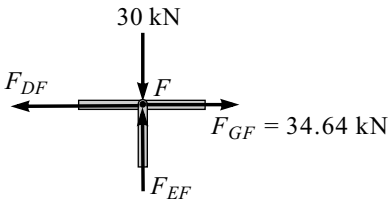

Fig. 6.2(c) : F.B.D. of *F*

(iii) Consider the F.B.D. of Joint *E*

$\Sigma F_y = 0$

$F_{DE} \sin 60^\circ - 30 \sin 60^\circ = 0$

$\therefore F_{DE} = 30$ kN (T)

$\Sigma F_x = 0$

$F_{CE} + F_{DE} \cos 60^\circ + 30 \cos 60^\circ + 40 = 0$

$\therefore F_{CE} = 70$ kN (C)

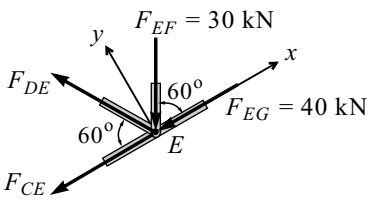

Fig. 6.2(d) : F.B.D. of *E*

Problem 3

Refer to Fig. 6.3(a) and determine the

(i) support reactions, and

(ii) forces in members *AE*, *BC* and *EC*.

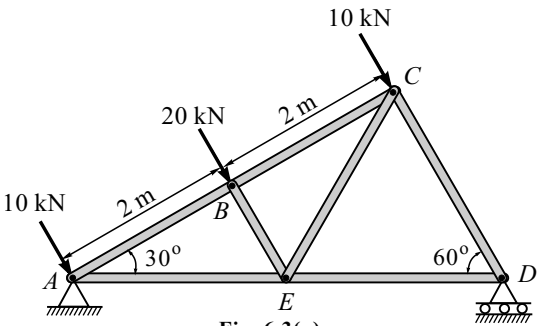

Fig. 6.3(a)

Solution

(i) In $\Delta\, ADC$

$$\sin 60^o = \frac{AC}{AD}$$

$$AD = \frac{4}{\sin 60^o}$$

$$AD = 4.62 \text{ m}$$

$$\Sigma M_A = 0$$

$$-20 \times 2 - 10 \times 4 + R_D \times 4.62 = 0$$

$$R_D = 17.32 \text{ kN } (\uparrow)$$

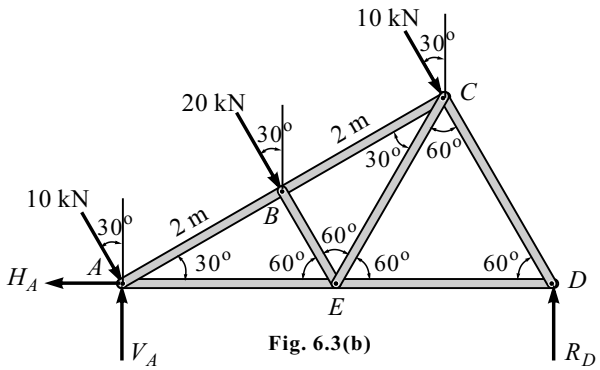

Fig. 6.3(b)

$$\Sigma F_y = 0$$

$$-10 \cos 30^o - 20 \cos 30^o - 10 \cos 30^o + V_A + R_D = 0$$

$$V_A = 17.32 \text{ kN } (\uparrow)$$

$$\Sigma F_x = 0$$

$$-H_A + 10 \sin 30^o + 20 \sin 30^o + 10 \sin 30^o = 0$$

$$\therefore H_A = 20 \text{ kN } (\leftarrow)$$

(ii) Consider the F.B.D. of Joint *A*

$$\Sigma F_y = 0$$

$$-10 \cos 30^o + 17.32 + F_{AB} \sin 30^o = 0$$

$$F_{AB} = -17.32 \text{ kN (Wrong assumed direction)}$$

$$\therefore F_{AB} = 17.32 \text{ kN (C)}$$

$$\Sigma F_x = 0$$

$$-20 + 10 \sin 30^o + F_{AB} \cos 30^o + F_{AE} = 0$$

$$F_{AE} = 30 \text{ kN (T)}$$

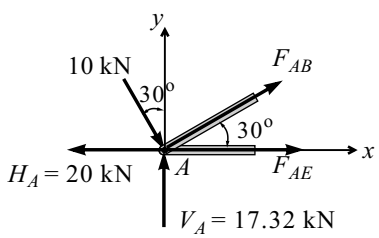

Fig. 6.3(c) : F.B.D. of *A*

(iii) Consider the F.B.D. of Joint *B*

For convenience, consider the x and y axis as shown in Fig. 6.3(b).

$$\Sigma F_x = 0$$

$$F_{BC} - F_{AB} = 0$$

$$F_{BC} = 17.32 \text{ kN (C)}$$

$$\Sigma F_y = 0$$

$$-20 + F_{BE} = 0$$

$$F_{BE} = 20 \text{ kN (C)}$$

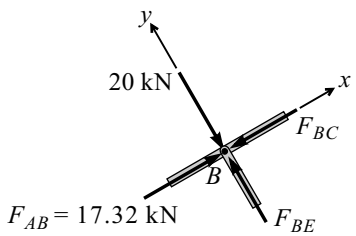

Fig. 6.3(d) : F.B.D. of *B*

(iv) Consider the F.B.D. of Joint *E*

$$\Sigma F_y = 0$$

$$-20 \sin 60^o + F_{EC} \sin 60^o = 0$$

$$F_{EC} = 20 \text{ kN (T)}$$

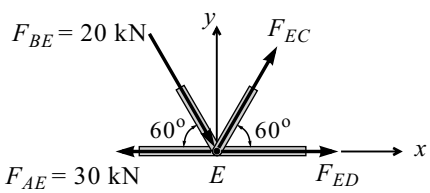

Fig. 6.3(e) : F.B.D. of *E*

Problem 4

Find out the forces in the member of the truss, loaded and supported as shown in Fig. 6.4(a). You are free to use any method for the analysis of this truss. State the nature of the force in each member.

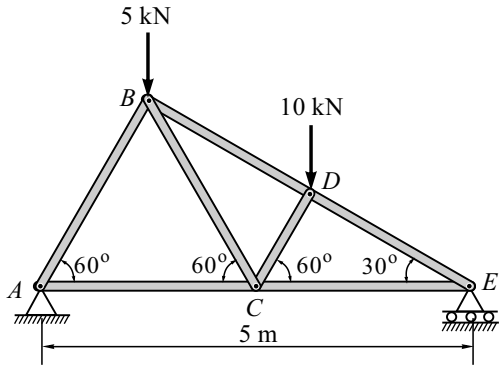

Fig. 6.4(a)

Solution

For finding forces in all members, it is preferable to use the joint method. First let us find support reaction and some geometrical distance for simplicity.

(i) Consider the F.B.D. of the entire truss

In $\Delta\, ABE$

$$\sin 30^\circ = \frac{AB}{AE}$$

$$AB = 2.5 \text{ m}$$

$$AB = AC = CE = 2.5 \text{ m}$$

Drop perpendicular line from B and D and mark P and Q respectively as shown in Fig. 6.4(b).

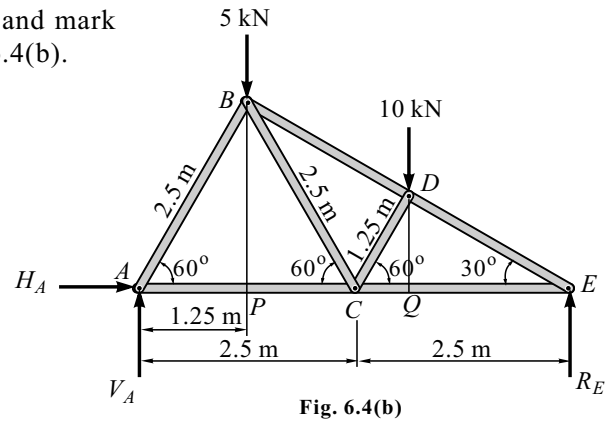

Fig. 6.4(b)

In $\Delta\, ABP$

$$\cos 60^\circ = \frac{AP}{AB}$$

$$\therefore\ AP = 1.25 \text{ m}$$

In $\Delta\, CDE$

$$\sin 30^\circ = \frac{CD}{CE} \qquad \therefore\ CD = 1.25 \text{ m}$$

In $\Delta\, CQD$

$$\cos 60^\circ = \frac{CQ}{CD} \qquad \therefore\ CQ = 0.625 \text{ m}$$

$$\Sigma M_A = 0$$

$$R_E \times 5 - 5 \times 1.25 - 10 \times (2.5 + 0.625) = 0$$

$$R_E = 7.5 \text{ kN } (\uparrow)$$

$$\Sigma F_x = 0$$

$$H_A = 0$$

$$\Sigma F_y = 0$$

$$V_A + R_E - 5 - 10 = 0$$

$$V_A = 7.5 \text{ kN } (\uparrow)$$

(ii) Consider the F.B.D. of Joint *A*

$\Sigma F_y = 0$

$V_A - F_{AB} \sin 60^o = 0$

$F_{AB} = 8.66$ kN (C)

$\Sigma F_x = 0$

$F_{AC} - F_{AB} \cos 60^o = 0$

$F_{AC} = 4.33$ kN (T)

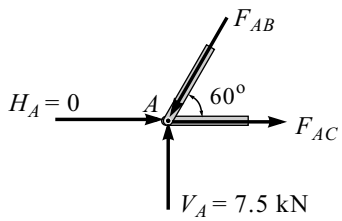

Fig. 6.4(c) : F.B.D. of *A*

(iii) Consider the F.B.D. of Joint *E*

$\Sigma F_y = 0$

$R_E - F_{DE} \sin 30^o = 0$

$F_{DE} = 15$ kN (C)

$\Sigma F_x = 0$

$F_{DE} \cos 30^o - F_{CE} = 0$

$F_{CE} = 12.99$ kN (T)

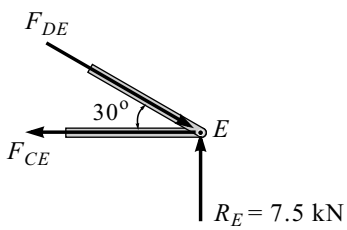

Fig. 6.4(d) : F.B.D. of *E*

(iv) Consider the F.B.D. of Joint *D*

Note : Orientation of axes are changed for easy solution.

$\Sigma F_y = 0$

$F_{CD} - 10 \sin 60^o = 0$

$F_{CD} = 8.66$ kN (C)

$\Sigma F_x = 0$

$F_{DE} - F_{BD} - 10 \cos 60^o = 0$

$F_{BD} = 15 - 10 \cos 60^o$

$F_{BD} = 10$ kN (C)

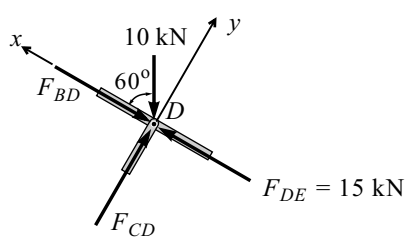

Fig. 6.4(e) : F.B.D. of *D*

(v) Consider the F.B.D. of Joint *C*

$\Sigma F_y = 0$

$F_{BC} \sin 60^o - F_{CD} \sin 60^o = 0$

$F_{BC} = 8.66$ kN (T)

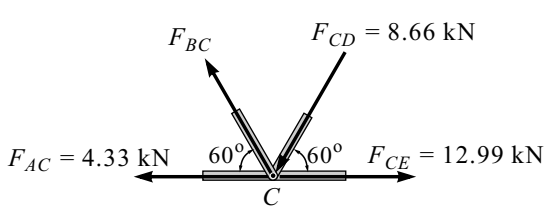

Fig. 6.4(f) : F.B.D. of *C*

The results are tabulated as follows:

Member	*AB*	*AC*	*CE*	*DE*	*BD*	*CD*	*BC*
Force (kN)	8.66	4.33	12.99	15	10	8.66	8.66
Type (T/C)	C	T	T	C	C	C	T

Problem 5

Determine the forces developed in the members of the truss shown in Fig. 6.5(a).

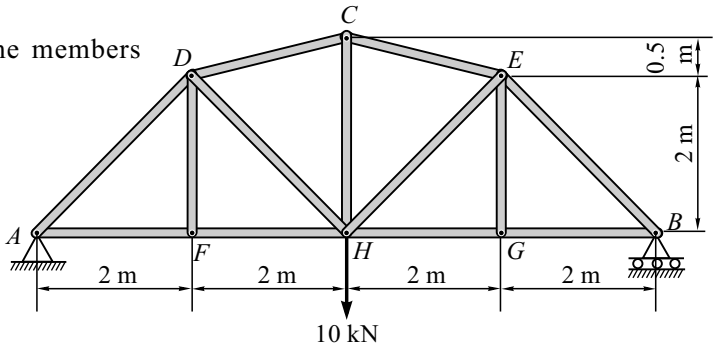

Fig. 6.5(a)

Solution

The given truss is symmetric in geometry and is loaded centrally. Therefore, half analysis is sufficient to answer complete truss. Left half is equal to right half.

By observation, we can identify member DF and EG are zero force members.

Since there is no horizontal force.

Therefore, $R_A = R_B = \frac{10}{2} = 5$ kN (↑)

(i) Consider the F.B.D. of Joint *A*

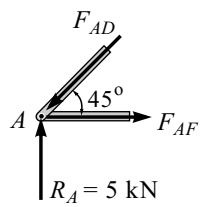

Fig. 6.5(b) : F.B.D. of *A*

$\Sigma F_y = 0$

$5 - F_{AD} \sin 45^\circ = 0$

$F_{AD} = 7.07$ kN (C)

$\Sigma F_x = 0$

$F_{AF} - F_{AD} \cos 45^\circ = 0$

$F_{AF} = 5$ kN (T)

By symmetric observation, we have

$F_{AF} = F_{FH} = F_{HG} = F_{GB} = 5$ kN (T) and $F_{AD} = F_{BE} = 7.07$ kN (C)

(ii) Consider the F.B.D. of Joint *D*

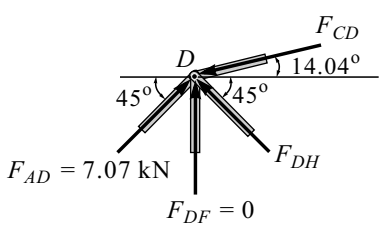

Fig. 6.5(c) : F.B.D. of *D*

$\Sigma F_x = 0$

$F_{AD} \cos 45^\circ - F_{DH} \cos 45^\circ - F_{CD} \cos 14.04^\circ = 0$

$0.707\, F_{DH} + 0.97\, F_{CD} = 5$ ... (I)

$\Sigma F_y = 0$

$F_{AD} \sin 45^\circ + F_{DH} \sin 45^\circ - F_{CD} \sin 14.04^\circ = 0$

$0.24\, F_{CD} - 0.707\, F_{DH} = 5$ ... (II)

Solving Eqs. (I) and (II), we get

$F_{CD} = 8.26$ kN (C); $F_{DH} = -4.27$ kN (Wrong assumed direction) $\therefore F_{DH} = 4.27$ kN (T)

By symmetric structure, we have

$F_{DH} = F_{EH} = 4.27$ kN (T) and $F_{CD} = F_{CE} = 8.26$ kN (C)

(iii) Consider the F.B.D. of Joint *H*

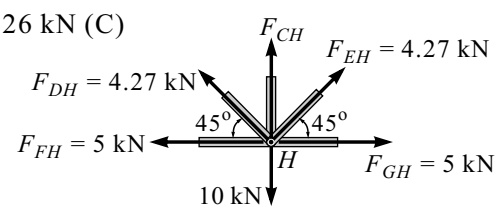

Fig. 6.5(d) : F.B.D. of *H*

$\Sigma F_y = 0$

$F_{CH} - 10 + 2 \times 4.27 \sin 45^\circ = 0$

$F_{CH} = 3.96$ kN (T)

6.5 METHOD OF SECTIONS (METHOD OF MOMENTS)

Procedure for Method of Joints

1. Consider the F.B.D. of the entire truss and find the support reactions applying equilibrium conditions.
2. Select the cutting section to cut the truss into two parts such that it should not cut more than three unknown members.
3. Select the F.B.D. of any one of the two parts considering all active and reactive force acting on that part.
4. Assume tension or compression in the cut members and applying equilibrium condition its numerical values can be obtained. If the obtained value is negative, do the required change in nature of force (T/C).
5. Though three equations of equilibrium are available (i.e., $\Sigma F_x = 0$, $\Sigma F_y = 0$ and $\Sigma M = 0$) preferably use $\Sigma M = 0$ by selecting appropriate point for moment such that two known passes through that point. Moment of centre may or may not lie on the F.B.D. of truss.
6. Do not consider the effect of uncut member in F.B.D.

Example

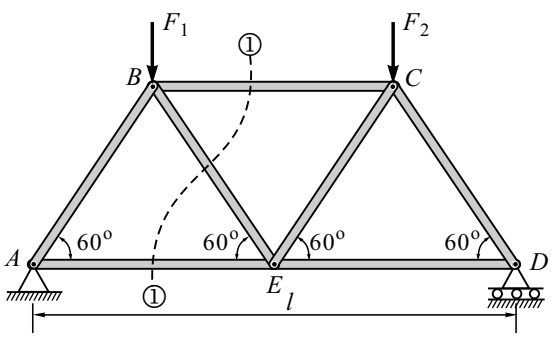

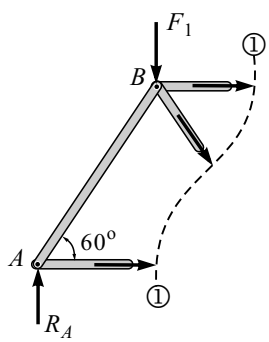

Section

Special Case

In general, we should not cut more than three members because we have three equations of equilibrium to find three unknowns. But we can in exceptional cases where many members are collinear or concurrent. We may overcome this condition of section and can cut more than three members. We should select an appropriate moment of centre through which line of action of all the cut members excluding one are passing and answer the required unknown.

Advantages of Section Method

In section method, we do not have to analyse the entire truss if any intermediate member force is desired to be obtained. It can directly be obtained by selecting proper position of section, so it is less time consuming as compared to joint method.

Solved Problems on Method of Sections

Problem 6

For the truss loaded as shown in Fig. 6.6(a), find the force in members *CE* and *CF* by method of sections only.

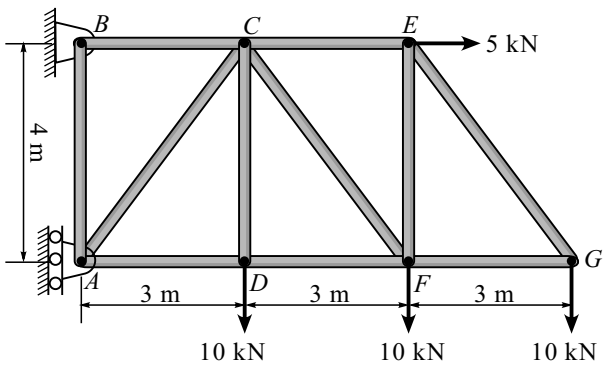

Fig. 6.6(a)

Solution

Consider the F.B.D. of the right part of truss, section along (s)-(s)

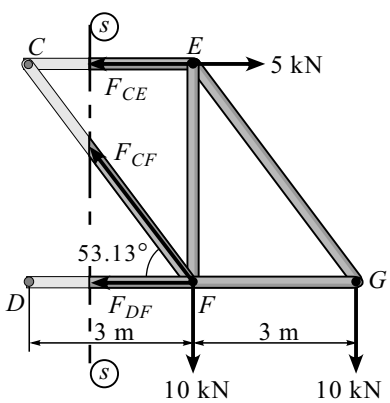

Fig. 6.6(b)

(i) $\Sigma F_y = 0$

$F_{CF} \sin 53.13^{\circ} - 10 - 10 = 0$

$\therefore F_{CF} = 25$ kN (Tension)

(ii) $\Sigma M_F = 0$

$F_{CE}\ 4 - 5 \times 4 - 10 \times 3 = 0$

$\therefore F_{CE} = 12.5$ kN (Tension)

Problem 7

For the pin-jointed truss loaded as shown in Fig. 6.7(a). Find

(i) all the reactions at A and B and

(ii) forces in member EC, ED, DF by method of sections only.

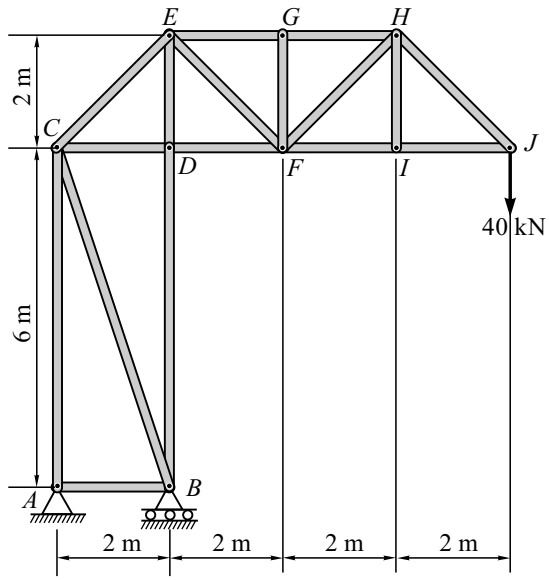

Fig. 6.7(a)

Solution

To find the support reactions.

(i) Consider the F.B.D. of the entire truss

$\Sigma M_A = 0$

$R_B \times 2 - 40 \times 8 = 0$

$R_B = 160$ kN (↑)

$\Sigma F_x = 0$

$H_A = 0$

$\Sigma F_y = 0$

$V_A + R_B - 40 = 0$

$V_A = 40 - 160$

$V_A = -120$ kN (Wrong assumed direction)

$V_A = 120$ kN (↓)

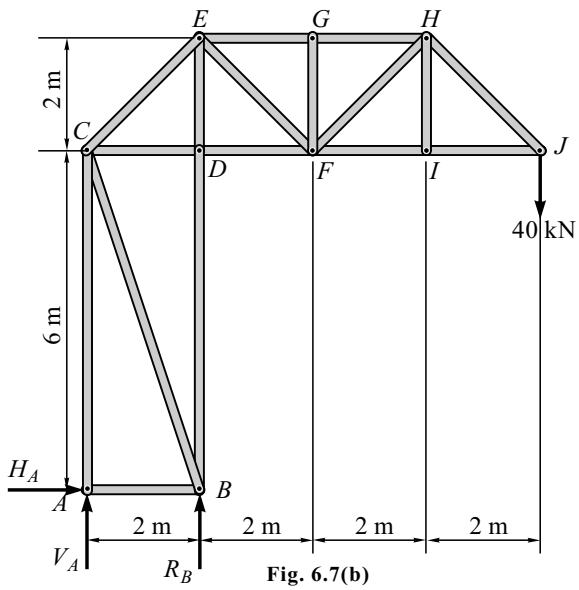

Fig. 6.7(b)

(ii) Consider the F.B.D. of the right part of Section ① - ①

$\Sigma M_C = 0$

$-F_{ED} \times 2 - 40 \times 8 = 0$

$F_{ED} = -160$ kN (Wrong assumed direction)

$F_{ED} = 160$ kN (C)

$\Sigma M_E = 0$

$-F_{DF} \times 2 - 40 \times 6 = 0$

$F_{DF} = -120$ kN (Wrong assumed direction)

$F_{DF} = 120$ kN (C)

$\Sigma M_D = 0$

$F_{CE} \cos 45^\circ \times 2 - 40 \times 6 = 0$

$F_{CE} = 169.71$ kN (T)

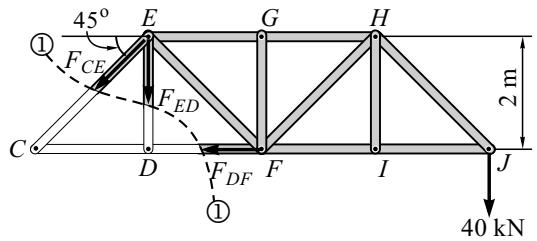

Fig. 6.7(c) : F.B.D. of Section ① - ①

SUMMARY

- **Trusses :** A structure made of straight slender bars joined together at their ends by frictionless pins to form a pattern of triangle is called truss. The loads act only at joints and not on the members. Thus, every member of a truss is identified as a two-force member.

- **Perfect Truss :** A pin jointed truss which has sufficient number of members to resist the load without undergoing any deformation in shape is called a perfect truss. A truss which satisfies the relation $m = 2j - r$ is called a perfect truss.

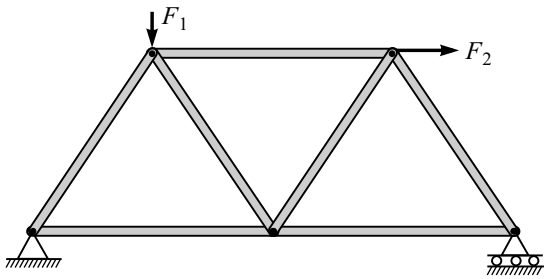

Here, members $m = 7$, joints $j = 5$ and reactions $r = 3$.

$$m = 2j - r$$
$$7 = 2 \times 5 - 3$$
$$\Rightarrow \quad 7 = 7$$

- **Assumptions for a Perfect Truss**

  1. All the members of the truss are straight and connected to each other at their ends by frictionless pins.
  2. All loading (external forces) on truss are acting only at pins.
  3. All the members are assumed to be weightless.
  4. All the members of truss and external forces acting at pins lies in the same plane.
  5. Static equilibrium condition is applicable for analysis of perfect truss (i.e., $\Sigma F_x = 0$, $\Sigma F_y = 0$ and $\Sigma M = 0$)

- **Procedure for Method of Joints**

  1. For a simply supported truss, consider the F.B.D. of the entire truss. Applying condition of equilibrium (i.e., $\Sigma F_x = 0$, $\Sigma F_y = 0$ and $\Sigma M = 0$) find support reactions.
  2. Consider the F.B.D. of joint (pin) from the truss at which not more than two members with unknown force exists.
  3. Assume the member to be in tension or compression by simple inspection and applying the condition of equilibrium (i.e., $\Sigma F_x = 0$ and $\Sigma F_y = 0$) to find the answers.
  4. The assumed sense can be verified from the obtained numerical results. A positive answer indicate that the sense is correct, whereas a negative answer indicates that the sense shown on the F.B.D. must be changed.

5. Select the new F.B.D. of joint with not more than two unknowns in a member and repeat points 3, 4 and 5 for a complete analysis.

6. Tabulate the answer representing member, magnitude of force and their nature.

- **Identification of Zero-Force Member :** If any joint is identified without external force (load) acting on it such that joint is formed by three members and two of them are collinear, then the third non-collinear member should be identified as a zero-force member.

- **Procedure for Method of Joints**

1. Consider the F.B.D. of entire truss and find the support reactions applying equilibrium conditions.

2. Select the cutting section to cut the truss into two parts such that it should not cut more than three unknown members.

3. Select F.B.D. of any one of the two parts considering all active and reactive force acting on that part.

4. Assume tension or compression in the cut members and applying equilibrium condition its numerical values can be obtained. If the obtained value is negative do the required change in nature of force (T/C).

5. Though three equations of equilibrium are available (i.e., $\Sigma F_x = 0$, $\Sigma F_y = 0$ and $\Sigma M = 0$) prefer to use $\Sigma M = 0$ by selecting appropriate point for moment such that two known passes through that point. Moment of centre may or may not lie on F.B.D. of truss.

6. Do not consider the effect of uncut member in F.B.D.

EXERCISES

[I] Problems

1. Determine the forces in the members of the truss as shown in Fig. 6.E1.

Ans.
F_{AE} = 13.39 kN (T), F_{CE} = 12.928 kN (T),
F_{DE} = 6.46 kN (T), F_{AB} = 14.78 kN (C),
F_{BC} = 0.928 kN (C), F_{CD} = 12.9 kN (C), and
F_{BE} = 12.928 kN (C)

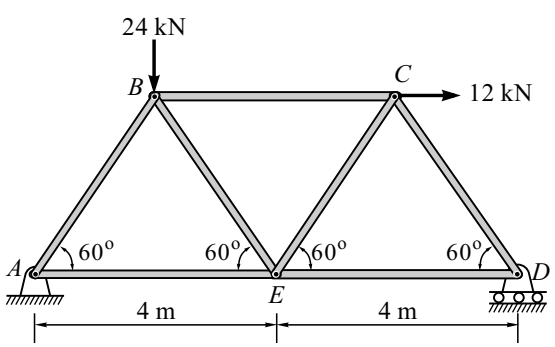

Fig. 6.E1

2. Determine the forces in the members of the truss as shown in Fig. 6.E2.

Ans.
F_{AB} = 21.21 kN (C), F_{BC} = 0,
F_{CD} = 18 kN (C), F_{BE} = 21.21 kN (C),
F_{AF} = 25 kN (T), F_{DE} = 10 kN (T),
F_{CE} = 15 kN (T), F_{EF} = 25 kN (T), and
F_{CE} = 30 kN (T)

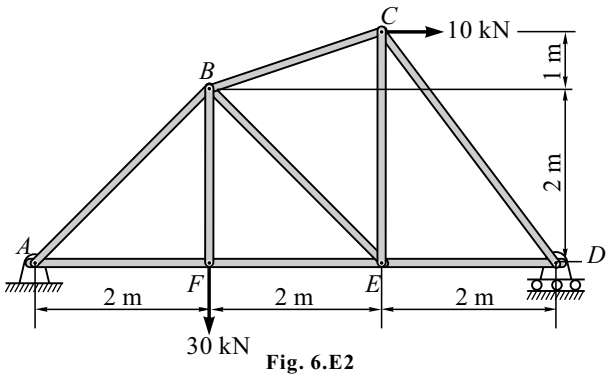

Fig. 6.E2

3. A simple plane truss is shown in Fig. 6.E3. Two 1000 N loads are shown acting on pins C and E. Determine the force in all the members using method of joints.

Ans.
F_{AB} = 1414 N (C), F_{CE} = 1000 N (T),
F_{AC} = 1000 N (T), F_{DE} = 1000 N (T),
F_{BC} = 1000 N (T), F_{EF} = 1000 N (T),
F_{BD} = 1000 N (C), F_{DF} = 1414 N (C), and
F_{CD} = 0

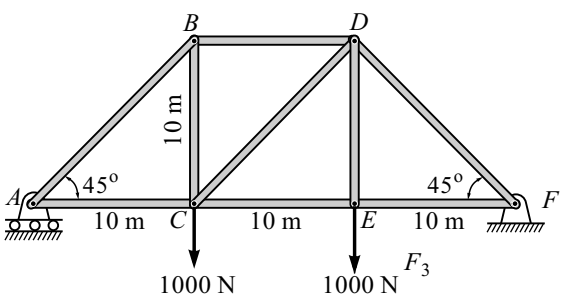

Fig. 6.E3

4. Find the forces in all the members of the truss shown in Fig. 6.E4.

Ans.
$V_D = V_F$ = 23 kN (↑), H_F = 0,
$F_{AD} = F_{CF}$ = 7 kN (C),
$F_{BD} = F_{BF}$ = 34 kN (C),
$F_{DF} = F_{EF}$ = 30 kN (T),
F_{BE} = 8 kN (T), and
$F_{AB} = F_{BC}$ = 0

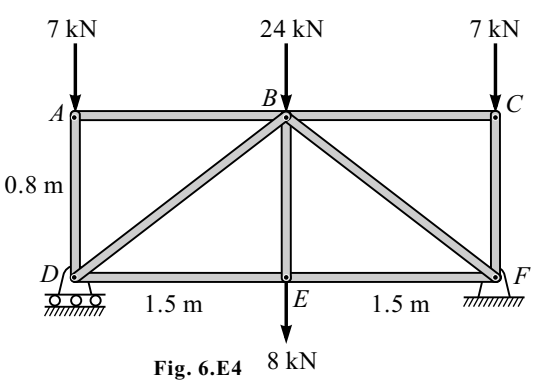

Fig. 6.E4

5. Find the forces in all the members of the truss shown in Fig. 6.E5.

Ans.
F_{AD} = 15 kN (T), F_{CD} = 16 kN (C),
F_{BD} = 9 kN (C), F_{DE} = 4 kN (C),
F_{BE} = 5 kN (T), and
F_{AB} = 4 kN (T)

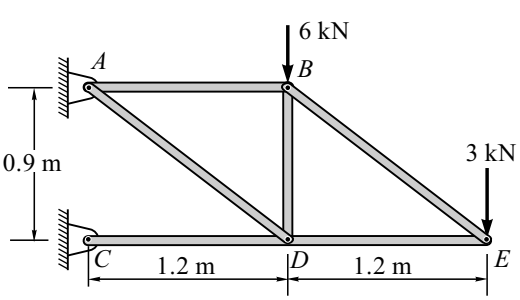

Fig. 6.E5

6. Find the forces in all the members of the truss shown in Fig. 6.E6.

Ans.
F_{AD} = 44.72 kN (T), F_{DE} = 20 kN (T),
F_{CD} = 10 kN (T), F_{CE} = 22.36 kN (C),
F_{BC} = 20 kN (C), and
F_{BD} = 22.36 kN (C)

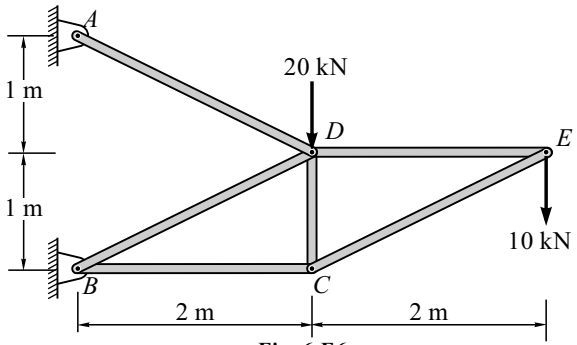

Fig. 6.E6

7. Find the forces in all the members of the truss shown in Fig. 6.E7.

Ans.
F_{BD} = 10.51 kN (T), F_{DF} = 6 kN (T),
F_{FG} = 6 kN (T), F_{BC} = 4.21 kN (T),
F_{DE} = 4.75 kN (C), F_{GE} = 6.33 kN (C),
F_{CE} = 11.08 kN (C), F_{DC} = 3.5 kN (C),
F_{EF} = 3 kN (C), and
F_{AC} = 14.77 kN (C)

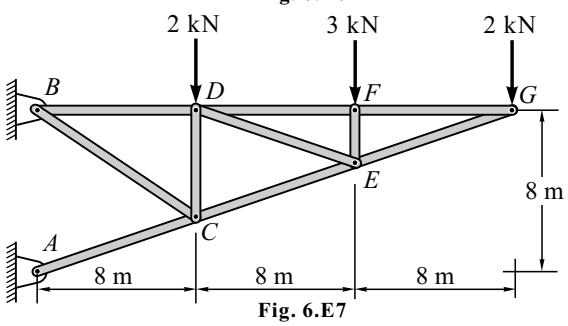

Fig. 6.E7

8. Find the forces in all the members of the truss shown in Fig. 6.E8.

Ans.
$F_{AB} = F_{BC} = F_{CD} = F_{DE}$ = 48 kN (T),
$F_{EF} = F_{FG} = F_{GH} = F_{HJ}$ = 53.667 kN (C),
F_{AJ} = 24 kN (T), and
$F_{DF} = F_{CF} = F_{CG} = F_{BG} = F_{BH} = F_{AH} = 0$

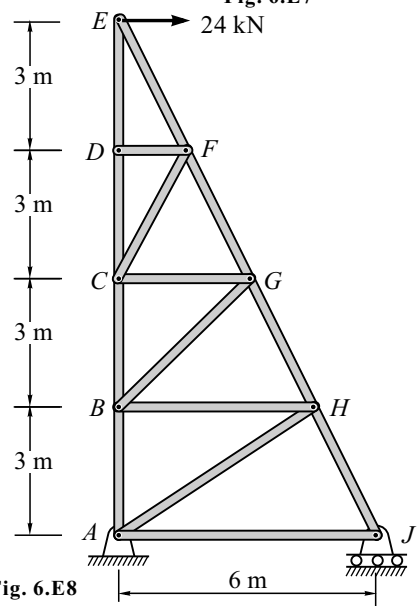

Fig. 6.E8

[II] Review Questions

1. What are trusses?

2. State the applications of trusses.

3. What are the assumptions of a perfect truss?

4. Describe how trusses are analysed by the method of joints.

5. Describe how trusses are analysed by the method of sections.

6. How can you identify a zero-force member?

7. Distinguish between:

(a) Perfect truss and imperfect truss.

(b) Deficient truss and redundant truss.

(c) Simply supported truss and cantilever truss.

[III] Fill in the Blanks

1. If we want to find forces in all member of truss then we would prefer the method of _____.

2. In the members of truss, the members are either in _____ or in _____.

3. A truss which satisfies the relation $m = 2j - r$ is called a _____ truss.

4. A perfect truss is considered as a _____ structure.

5. As per the assumption of perfect truss, all loadings (external forces) on truss act only at _____ .

[IV] Multiple-choice Questions

Select the appropriate answer from the given options.

1. All the members of truss are _____ force member.

(a) zero **(b)** one **(c)** two **(d)** three

2. If truss satisfies $m > 2j - r$ ($m \Rightarrow$ number of members, $j \Rightarrow$ number of joints and $r \Rightarrow$ number of components of support reactions) then the truss is assumed to be _____ truss.

(a) perfect **(b)** redundant **(c)** deficient **(d)** None of these

3. All the members are assumed to be _____.

(a) weightless **(b)** straight **(c)** weightless and straight **(d)** None of these

4. Method of section is also called _____.

(a) Method of moment **(b)** Moment of inertia **(c)** Method of joint **(d)** None of these

5. Imperfect deficient truss holds the _____ relation.

(a) $m = 2j - r$ **(b)** $m < 2j - r$ **(c)** $m > 2j - r$ **(d)** $m < j - 2r$

6. Over rigid truss is also called a _____ truss.

(a) perfect **(b)** redundant **(c)** deficient **(d)** unstable

7. If a joint is formed by three members such that two are collinear and no external force is acting at joint then the third non collinear member is identified as a _____.

(a) zero-force member **(b)** one-force member

(c) two-force member **(d)** three-force member

CHAPTER

7

FRICTION

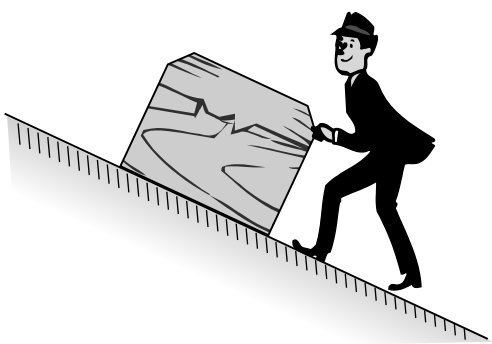

Learning Objectives

After reading this chapter, you will be able to answer the following questions:

- *What are the various types of friction?*
- *What are the laws of friction?*
- *What is meant by the cone of friction?*
- *How can you analyse frictions between blocks?*
- *How can you analyse friction developed by wedges?*
- *How can you consider friction for ladder?*

7.1 INTRODUCTION

In most of the equilibrium problems that we have analysed up to this point, surfaces of contact have been assumed to be frictionless. The concept of a frictionless surface is, of course, an idealisation. All real surfaces have some roughness.

When a body moves or tends to move over another body, a force opposing the motion develops at the contact surfaces. Whenever a tendency exists for one contacting surfaces to slide along another surface, tangential force is generated between contacting surface. This force which opposes the movement or tendency of movement is called a ***frictional force*** *or simply* ***friction***.

When two bodies in contact are in motion then the frictional force is opposite to the relative motions (Fig. 7.1-i).

Cause of Friction : Friction is due to *the resistance offered to motion by minutely projecting portions at the contact surfaces*. This microscopic projections gets interlocked. To a small extent, the material of two bodies in contact also produces resistance to motion due to intra molecular force of attraction, i.e., adhesive properties.

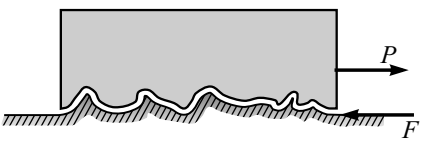

Fig. 7.1-i : Magnified Microscopic View of Rough Surface

7.2 TYPES OF FRICTION

Dry Friction : Dry friction develops when *the unlubricated surface of two solids are in contact under a condition of sliding or a tendency to slide*. A frictional force tangent to the surfaces of contact is developed both during the interval leading up to impending slippage and while slippage takes place. The direction of the frictional force always opposes the relative motion or impending motion. This type of friction is also known as *Coulomb friction*.

Fluid Friction : Fluid friction is developed when *adjacent layers in a fluid (liquid or gas) are moving at different velocities.* This motion gives rise to frictional forces between fluid elements and these forces depend on the relative velocity between layers. Fluid friction depends not only on the velocity gradients within the fluid but also on viscosity of fluid, which is a measure of its resistance to shearing action between fluid layers. Fluid friction is treated in the study of fluid mechanics and is beyond the scope of this text. So we are going to deal with dry friction only.

7.3 MECHANISM OF FRICTION

Consider a block of weight W resting on a horizontal surface as shown in Fig. 7.3-i. The contacting surface possesses a certain amount of roughness. Let P be the horizontal force applied which will vary continuously from zero to a value sufficient to just move the block and then to maintain the motion. The free body diagram of the block shows active forces (i.e., Applied force P and weight of block W) and reactive forces (i.e., normal reaction N and tangential frictional force F).

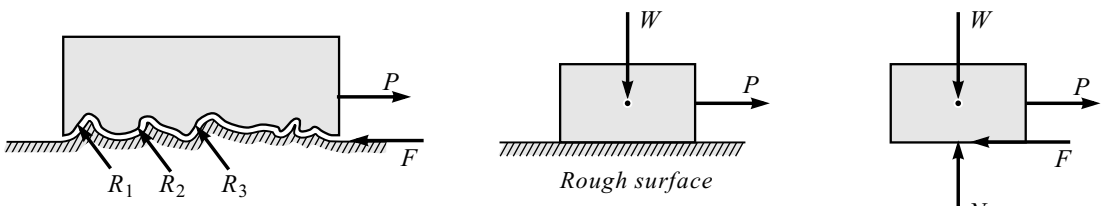

Fig. 7.3-i : Mechanism of Friction

Frictional force F has the remarkable property of adjusting itself in magnitude equal to the applied force P till the limiting equilibrium condition.

Limiting Equilibrium Condition : As applied force P increases, the frictional force F is equal in magnitude and opposite in direction. However, there is a limit beyond which the magnitude of the frictional force cannot be increased. If the applied force is more than this maximum frictional force, there will be movement of one body over the other. Once the body begins to move, there is decrease in frictional force F from maximum value observed under static condition. The frictional force between the two surface when the body is in motion is called *kinetic* or *dynamic friction* F_K. (Refer Fig. 7.3-ii).

Limiting Frictional Force (F_{max}) : It is the maximum frictional force developed at the surface when the block is at the verge of motion (impending motion). (Refer Fig. 7.3-ii).

Coefficient of Friction : By experimental evidence it is proved that limiting frictional force is directly proportional to normal reaction.

$$F_{max} \propto N$$

$$F_{max} = \mu_S N \Rightarrow \mu_S = \frac{F_{max}}{N} \qquad \text{...(7.1)}$$

Coefficient of Static Friction : The ratio of limiting frictional force (F_{max}) and normal reaction (N) is a constant. This constant is called the *coefficient of static friction* (μ_S).

If a body is in motion, we have

$$F_K \propto N$$

$$F_K = \mu_K N \Rightarrow \mu_K = \frac{F_K}{N} \qquad \text{...(7.2)}$$

Coefficient of Kinetic Friction : The ratio of kinetic frictional force (F_K) and normal reaction (N) is a constant. This constant is known as *coefficient of kinetic friction* (μ_K).

Kinetic friction is always less than limiting friction.

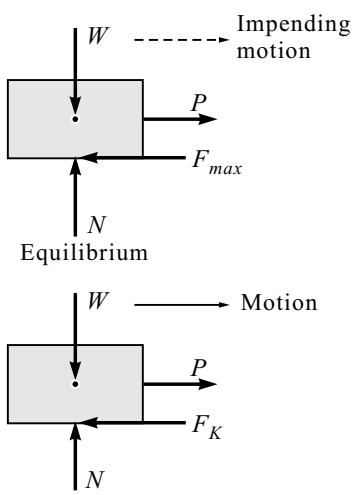

Fig. 7.3-ii

7.4 LAWS OF FRICTION

1. The frictional force is always tangential to the contact surface and acts in a direction opposite to that in which the body tends to move.
2. The magnitude of frictional force is self-adjusting to the applied force till the limiting frictional force is reached and at the limiting frictional force the body will have impending motion.
3. Limiting frictional force F_{max} is directly proportional to normal reactions (i.e., $F_{max} = \mu_S N$).
4. For a body in motion, kinetic frictional force F_K developed is less than that of limiting frictional force F_{max} and the relation $F_K = \mu_K N$ is applicable.
5. Frictional force depends upon the roughness of the surface and the material in contact.
6. Frictional force is independent of the area of contact between the two surfaces.
7. Frictional force is independent of the speed of the body.
8. Coefficient of static friction μ_S is always greater than the coefficient of kinetic friction μ_K.

Angle of Friction : It is the angle made by the resultant of the limiting frictional force F_{max} and the normal reaction N with the normal reactions.

Consider the block with weight W and applied force P.

When the block is at the verge of motion, limiting frictional force F_{max} will act in opposite direction of applied force and normal reaction N will act perpendicular to surface as shown in Fig. 7.4-i. We can replace the F_{max} and N by resultant reaction R which acts at an angle ϕ to the normal reaction.

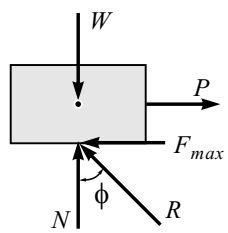

Fig. 7.4-i

This angle ϕ is called as the *angle of friction*.

From Fig. 7.4-ii, we have

$$F_{max} = R \sin \phi$$

$$\mu_S N = R \sin \phi \qquad \text{... (I)} \qquad (\because F_{max} = \mu_S N)$$

$$N = R \cos \phi \qquad \text{... (II)}$$

Dividing Eq. (I) by Eq. (II), we get

$$\tan \phi = \mu_S \text{ or } \phi = \tan^{-1} \mu_S \qquad \text{...(7.3)}$$

Angle of Repose : It is the minimum angle of inclination of a plane with the horizontal at which the body kept will just slide down on it without the application of any external force (due to self-weight).

Consider the block with weight W resting on an inclined plane, which makes an angle θ with horizontal as shown in Fig. 7.4-ii. When θ is small the block will rest on the plane. If θ is increased gradually a slope is reached at which the block is about to start sliding. This angle θ is called the *angle of repose*.

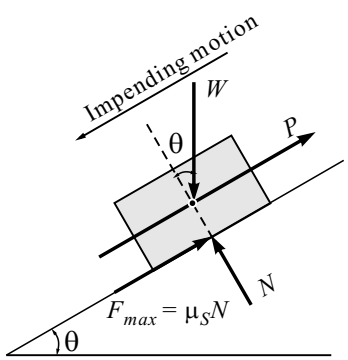

Fig. 7.4-ii

For limiting equilibrium condition, we have

$\Sigma F_x = 0$

$$\mu_S N - W \sin\theta = 0$$

$$W \sin\theta = \mu N \qquad \text{... (I)}$$

$\Sigma F_y = 0$

$$N - W \cos\theta = 0$$

$$W \cos\theta = N \qquad \text{... (II)}$$

Dividing Eq. (I) by Eq. (II), we get

$$\tan\theta = \mu_S \qquad \text{...(7.4)}$$

In previous discussion, we had $\tan\phi = \mu_S$, which shows

Angle of friction ϕ = Angle of repose θ

The above relation also shows that the angle of repose is independent of the weight of the body and it depends on μ.

Cone of Friction : When the applied force P is just sufficient to produce the impending motion of given body, angle of friction ϕ is obtained which is the angle made by resultant of limiting friction force and normal reaction with normal reaction as shown in Fig. 7.4-iii. If the direction of applied force P is gradually changed through 360°, the resultant R generates a right circular cone with semi vertex angle equal to ϕ. This is called the *cone of friction*.

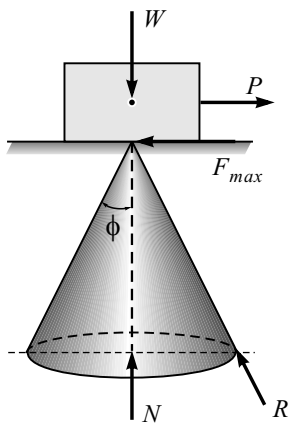

Fig. 7.4-iii

7.5 TYPES OF FRICTION PROBLEMS

The above discussion can be represented by a graph with applied force P v/s frictional force F as shown in Fig. 7.5-i.

Referring to the graph we may now recognize three distinct types of problems. Here, we have static friction, limiting friction and kinetic friction.

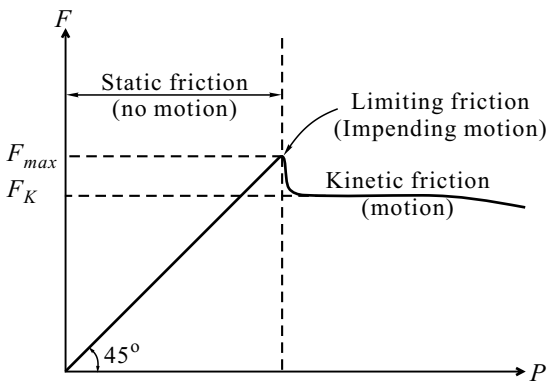

Fig. 7.5-i

1. **Static Friction :** If in the problem there is neither the condition of impending motion nor that of motion then to determine the actual force, we first assume static equilibrium and take F as a frictional force required to maintain the equilibrium condition.

Here, we have three possibilities:

(i) $F < F_{max}$ $\Rightarrow$ Body is in static equilibrium condition which means body is purely at rest.

(ii) $F = F_{max}$ $\Rightarrow$ Body is in limiting equilibrium condition which means impending motion and hence $F = F_{max} = \mu_S N$ is valid equation.

(iii) $F > F_{max}$ $\Rightarrow$ Body is in motion which means $F = F_K = \mu_K N$ is valid equation (this condition is impossible, since the surfaces cannot support more force than the maximum frictional force. Therefore, the assumption of equilibrium is invalid, the motion occurs).

2. **Limiting Friction :** The condition of impending motion is known to exist. Here a body which is in equilibrium is on the verge of slipping which means the body is in limiting equilibrium condition.

   $F_{max} = \mu_S N$ is valid equation.

3. **Kinetic Friction :** The condition of relative motion is known to exist between the contacting surfaces. So, the body is in motion.

   Kinetic friction takes place $F_K = \mu_K N$ is valid equation.

7.6 APPLICATIONS OF FRICTION

1. The running vehicle is controlled by applying brakes to its tire because of friction. The vehicle moves with better gripe and does not slips due to appropriate friction between tire and the road.
2. One can walk comfortably on the floor because of proper gripping between floor and the sole of the shoes. It is difficult to walk on oily or soapy floor.
3. Belt and pulley arrangement permits loading and unloading of load effectively because of suitable friction.
4. A lift moves smoothly without slipping due to proper rope and pulley friction combination.
5. A simple lifting machine like screw jack functions effectively based on principle of wedge friction.

Solved Problems - Body Placed on Horizontal Plane

Problem 1

Determine the frictional force developed on the block shown in Fig. 7.1(a) when

(i) $P = 40$ N,

(ii) $P = 80$ N. Coefficient of static friction between block and floor is $\mu_S = 0.3$ and $\mu_K = 0.25$ and

(iii) Also find the value of P when the block is about to move.

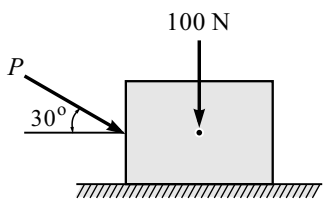

Fig. 7.1(a)

Solution

(i) When $P = 40$ N

Consider the F.B.D. of the block [Fig. 7.1(b)].

Let F be the frictional force required to maintain the static equilibrium condition.

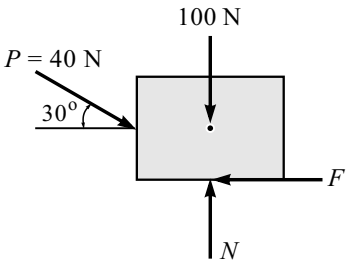

Fig. 7.1(b) : F.B.D. of Block

$\Sigma F_y = 0$

$N - 100 - 40 \sin 30^o = 0$

$N = 120$ N

$\Sigma F_x = 0$

$40 \cos 30^o - F = 0$

$F = 34.64$ N

For limiting equilibrium condition, we have

$F_{max} = \mu_S \times N = 0.3 \times 120$

$F_{max} = 36$ N

Since $F < F_{max}$, therefore, block is in static equilibrium condition.

Therefore, actual frictional force is $F = 34.64$ N

Here, the block is not moving.

(ii) When $P = 80$ N

Consider the F.B.D. of the block [Fig. 7.1(c)].

Let F be the frictional force required to maintain the static equilibrium condition.

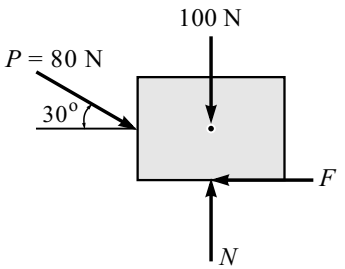

Fig. 7.1(c) : F.B.D. of Block

$\Sigma F_y = 0$

$N - 100 - 80 \sin 30^o = 0$

$N = 140$ N

$\Sigma F_x = 0$

$80 \cos 30^o - F = 0$

$F = 69.28$ N

For limiting equilibrium condition, we have

$F_{max} = \mu_S \times N = 0.3 \times 140$

$F_{max} = 42$ N

$\because F > F_{max}$

$\therefore$ the block is in motion and kinetic friction is considered.

$\therefore F_K = \mu_K N$ is applicable and $F_{max} = \mu_S N$ is not applicable.

$F_K = 0.25 \times 140$

$F_K = 35$ N

$\therefore$ actual frictional force acting at surface is $F_K = 35$ N and block is in motion.

(iii) Find P = ?

For limiting equilibrium condition,
consider the F.B.D. of the block [Fig. 7.1(d)].

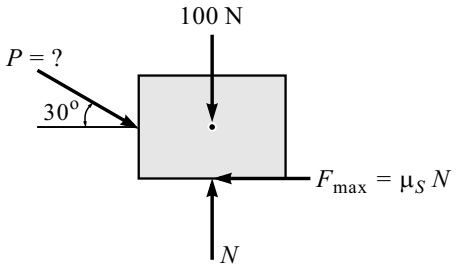

Fig. 7.1(d) : F.B.D. of Block

$\Sigma F_y = 0$

$N - 100 - P \sin 30^\circ = 0$

$N = 100 + P \sin 30^\circ$ ... (I)

$\Sigma F_x = 0$

$P \cos 30^\circ - \mu_S N = 0$

From Eq. (I),

$P \cos 30^\circ - 0.3\,(100 + P \sin 30^\circ) = 0$

$P \cos 30^\circ - 0.3\,P \sin 30^\circ = 0.3 \times 100$

$P = 41.9$ N

When $P = 41.9$ N the block is about to move (Impending motion).

Problem 2

A wooden block of 40 kg mass is on a rough inclined plane as shown in Fig. 7.2(a). Find the frictional force at surface in contact if $\mu_S = 0.4$ and $\mu_K = 0.35$.

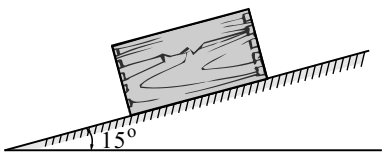

Fig. 7.2(a)

Solution

$\tan \phi = \mu_S$

$\therefore \phi = 21.8^\circ$

We know angle of friction is equal to angle of repose for limiting equilibrium condition where self-weight of block is just sufficient to slide down without any external force acting on it.

In the above case, inclination of surface (15°) is less than angle of friction $\phi = 21.8^\circ$. Therefore, the block will be in static equilibrium condition (i.e., stationary).

(i) Consider the F.B.D. of the block

Let F be the frictional force required to maintain the static equilibrium condition.

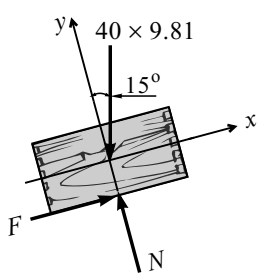

Fig. 7.2(b) : F.B.D. of Block

$\Sigma F_x = 0$

$F - 40 \times 9.81 \sin 15^\circ = 0$

$F = 101.56$ N

Problem 3

For Problem 2, what is the external force required to be applied parallel to the inclined plane in downward direction for impending motion?

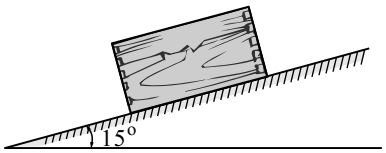

Fig. 7.3(a)

Solution

Impending motion means limiting equilibrium condition is applicable, i.e.,

$$F_{max} = \mu N$$

(i) Consider the F.B.D. of the block

Let P be the force required to be applied to develop impending motion [Fig. 7.3(b)].

$$\Sigma F_y = 0$$

$$N - (40 \times 9.81 \cos 15^o) = 0$$

$$N = 379.03 \text{ N}$$

$$\Sigma F_x = 0$$

$$\mu_S N - P - (40 \times 9.81 \sin 15^o) = 0$$

$$P = 0.4 \times 379.03 - 40 \times 9.81 \sin 15^o$$

$$P = 50.05 \text{ N } (15^o \swarrow)$$

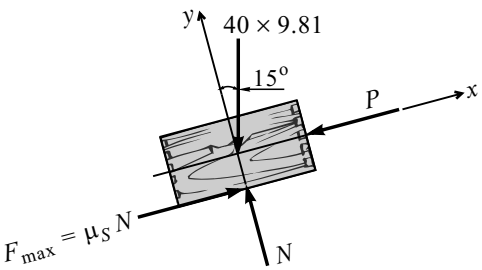

Fig. 7.3(b) : F.B.D. of Block

Problem 4

A support block is acted upon by two forces as shown in Fig. 7.4(a), knowing that the coefficient of friction between the block and incline are $\mu_S = 0.35$, $\mu_K = 0.25$, determine the force P required

(i) to start the block moving up the plane,

(ii) to keep it moving up, and

(iii) to prevent it from sliding down.

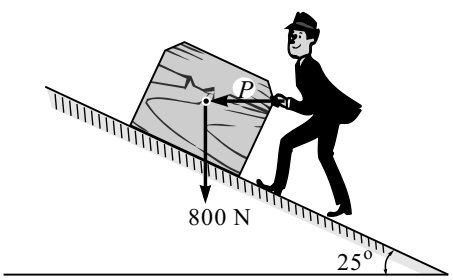

Fig. 7.4(a)

Solution

(i) Force *P* required to start the block moving up the plane

Consider the F.B.D. of the block [Fig. 7.4(b)].

$$\Sigma F_y = 0$$

$$N - 800 \cos 25^o - P \cos 65^o = 0$$

$$N = 800 \cos 25^o + P \cos 65^o$$

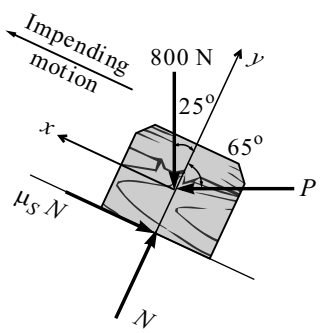

Fig. 7.4(b) : F.B.D. of Block

$\Sigma F_x = 0$

$P \sin 65^o - \mu_S N - 800 \sin 25^o = 0$

$P \sin 65^o - 0.35(800 \cos 25^o + P \cos 65^o) - 800 \sin 25^o = 0$

$P \sin 65^o - 0.35 \times P \cos 65^o - 0.35 \times 800 \cos 25^o - 800 \sin 25^o = 0$

$P (\sin 65^o - 0.35 \cos 65^o) = 0.35 \times 800 \cos 25^o + 800 \sin 25^o$

$P = 780.42$ N

(ii) Force *P* required to keep it moving up

Consider the F.B.D. of the block [Fig. 7.4(c)].

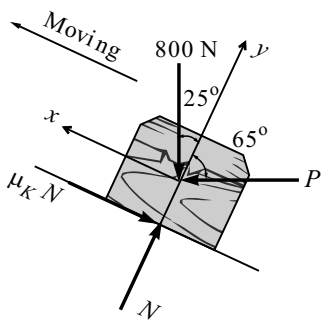

Fig. 7.4(c) : F.B.D. of Block

$\Sigma F_y = 0$

$N - 800 \cos 25^o - P \cos 65^o = 0$

$N = 800 \cos 25^o + P \cos 65^o$

$\Sigma F_x = 0$

$P \sin 65^o - \mu_K N - 800 \sin 25^o = 0$

$P \sin 65^o - 0.25(800 \cos 25^o + P \cos 65^o) - 800 \sin 25^o = 0$

$P \sin 65^o - 0.25 \times P \cos 65^o - 0.25 \times 800 \cos 25^o - 800 \sin 25^o = 0$

$P (\sin 65^o - 0.25 \cos 65^o) = 0.25 \times 800 \cos 25^o + 800 \sin 25^o$

$P = 648.67$ N

(iii) Force *P* required to prevent it from sliding down

Consider the F.B.D. of the block. [Fig. 7.4(d)]

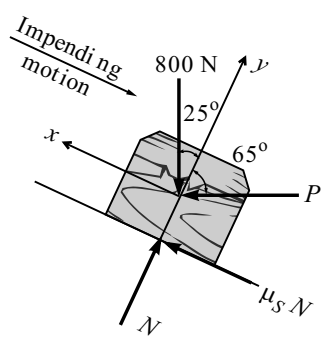

Fig. 7.4(d) : F.B.D. of Block

$\Sigma F_y = 0$

$N - 800 \cos 25^o - P \cos 65^o = 0$

$N = 800 \cos 25^o + P \cos 65^o$

$\Sigma F_x = 0$

$\mu_S N + P \sin 65^o - 800 \sin 25^o = 0$

$0.35(800 \cos 25^o + P \cos 65^o) + P \sin 65^o - 800 \sin 25^o = 0$

$0.35 \times 800 \cos 25^o - 0.35 \times P \cos 65^o + P \sin 65^o - 800 \sin 25^o = 0$

$P (0.35 \cos 65^o + \sin 65^o) = 800 \cos 25^o - 0.35 \times 800 \sin 25^o$

$P = 80$ N

Problem 5

Two blocks A and B are placed on inclined planes as shown in Fig. 7.5(a). The block A weighs 1000 N. Determine minimum weight of the block B for maintaining the equilibrium of the system. Assume that the blocks are connected by an inextensible string passing over a frictionless pulley. Coefficient of friction μ_A between the block A and the plane is 0.25. Assume the same value for μ_B.

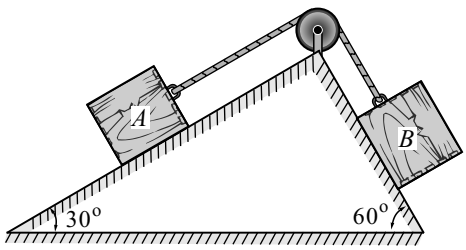

Fig. 7.5(a)

Solution

For minimum weight of the block B in limiting equilibrium condition, tendency of block B will be to impend downwards.

$\therefore$ impending motion of block A will be upward.

(i) Consider the F.B.D. of block *A* [Fig. 7.5(b)]**.**

$\Sigma F_y = 0$

$N_A - 1000 \cos 30^\circ = 0$

$N_A = 866.03$ N

$\Sigma F_x = 0$

$T - 1000 \sin 30^\circ - 0.25 \times 866.03 = 0$

$T = 1000 \sin 30^\circ + 0.25 \times 866.03$

$T = 716.51$ N

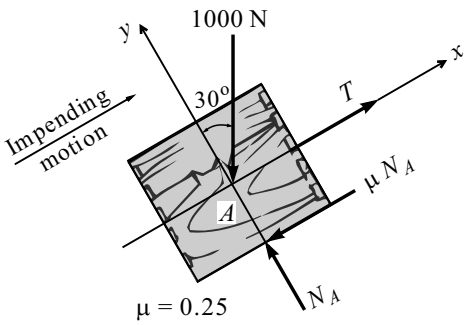

Fig. 7.5(b) : F.B.D. of Block *A*

(ii) Consider the F.B.D. of block *B* [Fig. 7.5(c)]**.**

$\Sigma F_y = 0$

$N_B - W_B \cos 60^\circ = 0$

$N_B = 0.5\, W_B$

$\Sigma F_x = 0$

$T - W_B \sin 60^\circ + \mu N_B = 0$

$716.51 - W_B \sin 60^\circ + 0.25 \times 0.5\, W_B = 0$

$$W_B = \frac{716.51}{\sin 60^\circ - 0.25 \times 0.5}$$

$W_{B(\min)} = 966.92$ N

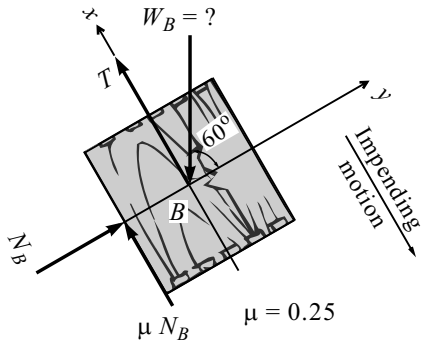

Fig. 7.5(c) : F.B.D. of Block *B*

Problem 6

Two blocks W_1 and W_2 resting on two inclined planes are connected by a horizontal bar AB as shown in Fig. 7.6(a). If W_1 equals 1000 N, determine the maximum value of W_2 for which the equilibrium can exist. The angle of limiting friction is 20° at all rubbing faces.

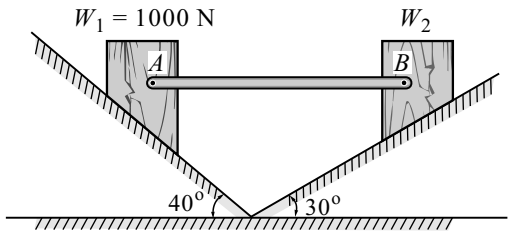

Fig. 7.6(a)

Solution

For maximum weight of the block B in limiting equilibrium condition, tendency of block B will be to impend upwards.

∴ impending motion of block A will be downward.

(i) Consider the F.B.D. of block *A* [Fig. 7.6(b)].

$\Sigma F_y = 0$

$N_1 \sin 50^\circ + \mu N_1 \sin 40^\circ - 1000 = 0$

$$N_1 = \frac{1000}{\sin 50^\circ + \tan 20^\circ \sin 40^\circ}$$

$N_1 = 1000$ N

$\Sigma F_x = 0$

$N_1 \cos 50^\circ - \mu N_1 \cos 40^\circ - F_{AB} = 0$

$F_{AB} = 1000 \cos 50^\circ - \tan 20^\circ \times 1000 \cos 40^\circ$

$F_{AB} = 363.97$ N

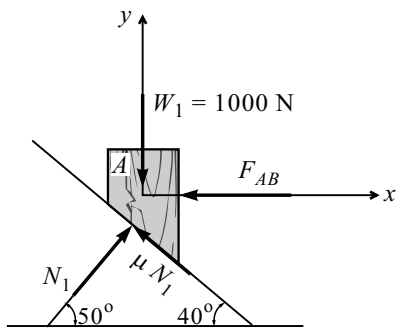

Fig. 7.6(b) : F.B.D. of Block *A*

(ii) Consider the F.B.D. of block *B* [Fig. 7.6(c)].

$\Sigma F_x = 0$

$F_{AB} - \mu N_2 \cos 30^\circ - N_2 \cos 60^\circ = 0$

$363.97 - \tan 20^\circ N_2 \cos 30^\circ - N_2 \cos 60^\circ = 0$

$$N_2 = \frac{363.97}{(\cos 60^\circ + \tan 20^\circ \cos 30^\circ)}$$

$N_2 = 446.48$ N

$\Sigma F_y = 0$

$N_2 \sin 60^\circ - \mu N_2 \sin 30^\circ - W_2 = 0$

$W_2 = 446.48 \sin 60^\circ - \tan 20^\circ \times 446.48 \sin 30^\circ$

$W_{2(\max)} = 305.41$ N

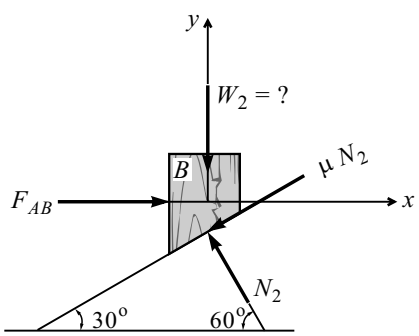

Fig. 7.6(c) : F.B.D. of Block *B*

Problem 7

Two blocks W_1 and W_2 which are connected by a horizontal bar AB are supported on rough planes as shown in Fig. 7.7(a). The coefficient of friction for the block A = 0.4. The angle of friction for the block B is 20°. Find the smallest weight W_1 of the block A for which the equilibrium can exist, if W_2 = 2250 N.

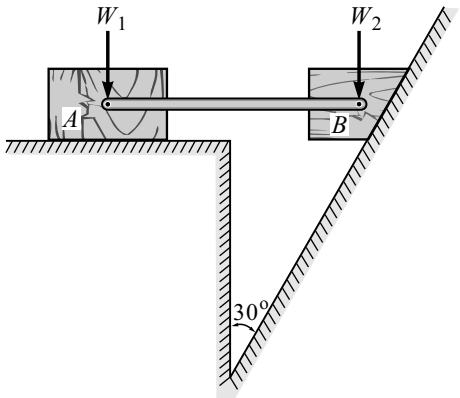

Fig. 7.7(a)

Solution

(i) Consider the F.B.D. of block *B* [Fig. 7.7(b)].

$\Sigma F_y = 0$

$N_1 \sin 30^\circ + \mu_1 N_1 \sin 60^\circ - 2250 = 0$

$N_1 (\sin 30^\circ + \tan 20^\circ \sin 60^\circ) = 2250$

$N_1 = 2760.03$ N

$\Sigma F_x = 0$

$F_{AB} + \mu_1 N_1 \cos 60^\circ - N_1 \cos 30^\circ = 0$

$F_{AB} = 2760.03 \cos 30^\circ - \tan 20^\circ \times 2760.03 \cos 60^\circ$

$F_{AB} = 1887.97$ N

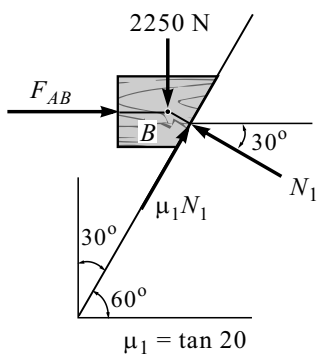

Fig. 7.7(b) : F.B.D. of Block *B*

(ii) Consider the F.B.D. of block *A* [Fig. 7.7(c)].

$\Sigma F_x = 0$

$\mu_2 N_2 - F_{AB} = 0$

$0.4\, N_2 = 1887.97$

$N_2 = 4719.93$ N

$\Sigma F_y = 0$

$N_2 - W_1 = 0$

$\therefore\ W_1 = 4719.93$ N

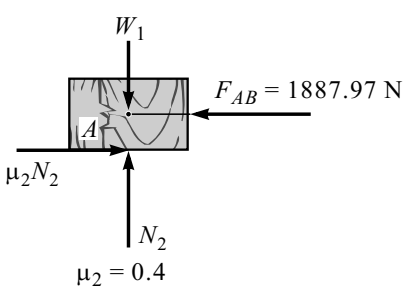

Fig. 7.7(c) : F.B.D. of Block *A*

Problem 8

Two blocks A = 100 N and $B = W$ are connected by a rod at there ends by frictionless hinges as shown in Fig. 7.8(a). Find the weight of block B (W) required for limiting equilibrium of the system if coefficient of friction at all sliding surface is 0.3.

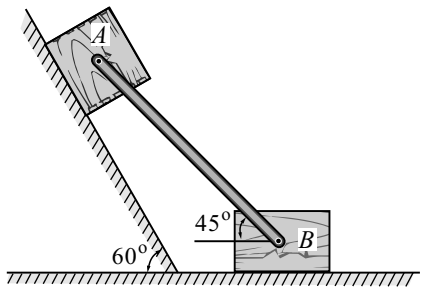

Fig. 7.8(a)

Solution

(i) Consider the F.B.D. of block *A* [Fig. 7.8(b)].

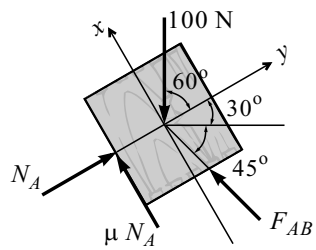

Fig. 7.8(b) : F.B.D. of Block *A*

$\Sigma F_y = 0$

$N_A - 100 \cos 60^\circ - F_{AB} \cos 75^\circ = 0$

$N_A = 100 \cos 60^\circ + F_{AB} \cos 75^\circ$

$\Sigma F_x = 0$

$\mu N_A + F_{AB} \sin 75^\circ - 100 \sin 60^\circ = 0$

$0.3(100 \cos 60^\circ + F_{AB} \cos 75^\circ) + F_{AB} \sin 75^\circ - 100 \sin 60^\circ = 0$

$(0.3 \times F_{AB} \cos 75^\circ) + F_{AB} \sin 75^\circ + (0.3 \times 100 \cos 60^\circ) - 100 \sin 60^\circ = 0$

$F_{AB} (0.3 \cos 75^\circ + \sin 75^\circ) = 100 \sin 60^\circ - (0.3 \times 100 \cos 60^\circ)$

$$F_{AB} = \frac{100 \sin 60^\circ - (0.3 \times 100 \cos 60^\circ)}{(0.3 \cos 75^\circ + \sin 75^\circ)}$$

$F_{AB} = 68.61$ N (rod is under compression)

(ii) Consider the F.B.D. of joint *B* [Fig. 7.8(c)].

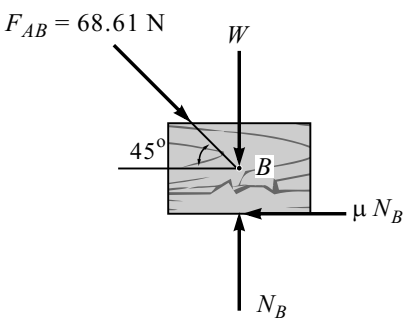

Fig. 7.8(c) : F.B.D. of Block *B*

$\Sigma F_y = 0$

$N_B - W - F_{AB} \sin 45^\circ = 0$

$N_B = W + F_{AB} \sin 45^\circ$

$\Sigma F_x = 0$

$F_{AB} \cos 45^\circ - \mu N_B = 0$

$68.61 \cos 45^\circ - 0.3(W + 68.61 \sin 45^\circ) = 0$

$0.3\, W = 33.96$

$W = 113.2$ N

Problem 9

Two identical blocks A and B are connected by a rod and rest against vertical and horizontal planes respectively as shown in Fig. 7.9(a). If sliding impends when $\theta = 45^o$, determine the coefficient of friction μ, assuming it to be the same at both floor and wall.

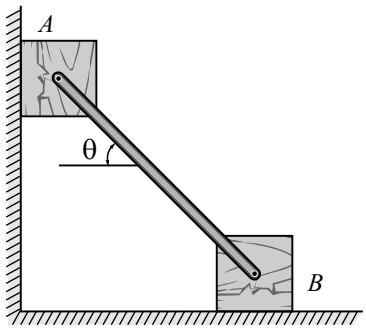

Fig. 7.9(a)

Solution

(i) Consider the F.B.D. of block *A* [Fig. 7.9(b)]**.**

$\Sigma F_x = 0$

$N_1 - F_{AB} \cos 45^o = 0$

$N_1 = F_{AB} \cos 45^o$

$\Sigma F_y = 0$

$\mu N_1 + F_{AB} \sin 45^o - W = 0$

$W = \mu N_1 + F_{AB} \sin 45^o$

$W = \mu F_{AB} \cos 45^o + F_{AB} \sin 45^o$

$W = F_{AB} (\mu \cos 45^o + \sin 45^o)$ ... (I)

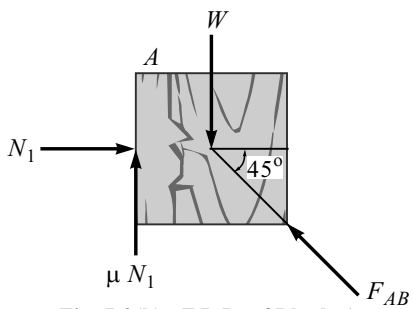

Fig. 7.9(b) : F.B.D. of Block *A*

(ii) Consider the F.B.D. of block *B* [Fig. 7.9(c)]**.**

$\Sigma F_y = 0$

$N_2 - W - F_{AB} \sin 45^o = 0$

$N_2 = W + F_{AB} \sin 45^o$

$\Sigma F_x = 0$

$F_{AB} \cos 45^o - \mu N_2 = 0$

$F_{AB} \cos 45^o - \mu (W + F_{AB} \sin 45^o) = 0$

$F_{AB} \cos 45^o - \mu W - \mu F_{AB} \sin 45^o = 0$

$$W = \frac{F_{AB} \cos 45^o - \mu F_{AB} \sin 45^o}{\mu}$$

$$W = \frac{F_{AB} (\cos 45^o - \mu \sin 45^o)}{\mu} \quad \text{... (II)}$$

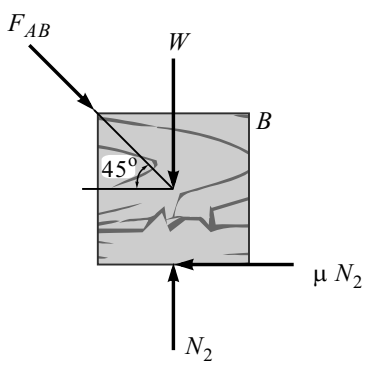

Fig. 7.9(c) : F.B.D. of Block *B*

Equating Eqs. (I) and (II),

$$F_{AB} (\mu \cos 45^o + \sin 45^o) = \frac{F_{AB} (\cos 45^o - \mu \sin 45^o)}{\mu}$$

$\mu^2 \cos 45^o + \mu \sin 45^o = \cos 45^o - \mu \sin 45^o$

$\mu^2 \cos 45^o + 2\mu \sin 45^o - \cos 45^o = 0$

$\mu^2 + 2\mu - 1 = 0$

Solving the quadratic equation, we get $\mu = 0.414$

Problem 10

Determine the force P to cause motion to impend. Take masses of block, A and B as 9 kg and 4 kg respectively and the coefficient of sliding friction as 0.25. The force P and rope are parallel to the inclined plane as shown in Fig. 7.10(a). Assume pulley to be frictionless.

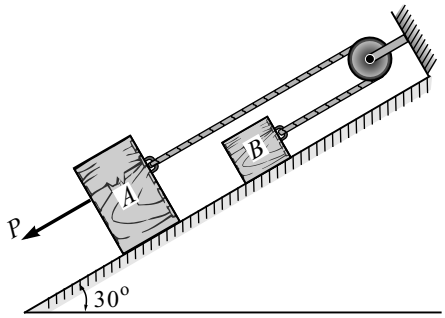

Fig. 7.10(a)

Solution

(i) Consider the F.B.D. of block *B* [Fig. 7.10(b)].

$\Sigma F_y = 0$

$N_B - (4 \times 9.81 \cos 30^o) = 0$

$N_B = 33.98$ N

$\Sigma F_x = 0$

$T - \mu N_B - (4 \times 9.81 \sin 30^o) = 0$

$T = (0.25 \times 33.98) + (4 \times 9.81 \sin 30^o)$

$T = 28.12$ N

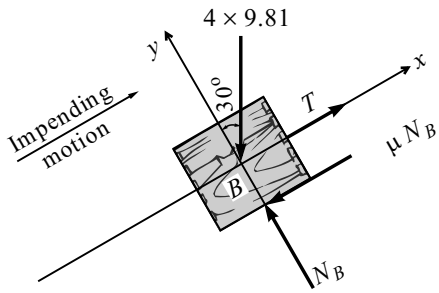

Fig. 7.10(b) : F.B.D. of Block *B*

(ii) Consider the F.B.D. of block *A* [Fig. 7.10(c)].

$\Sigma F_y = 0$

$N_A - (9 \times 9.81 \cos 30^o) = 0$

$N_A = 76.46$ N

$\Sigma F_x = 0$

$T + \mu N_A - P - (9 \times 9.81 \sin 30^o) = 0$

$P = 28.12 + (0.25 \times 76.46) - (9 \times 9.81 \sin 30^o)$

$P = 3.09$ N

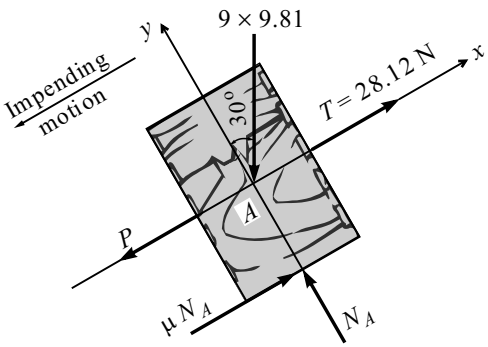

Fig. 7.10(c) : F.B.D. of Block *A*

Problem 11

Two blocks A and B of 500 N and 750 N weights respectively are connected by a cord that passes over a frictionless pulley as shown in Fig. 7.11(a). The coefficient of friction between the block A and the inclined plane is 0.4 and that between the block B and the inclined plane is 0.3. Determine the force P to be applied to block B to produce the impending motion of block B down the plane.

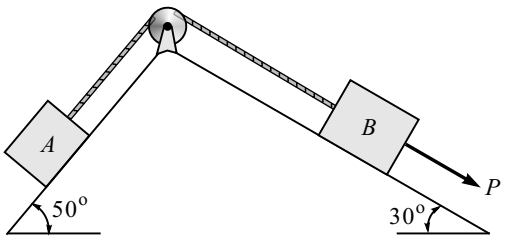

Fig. 7.11(a)

(i) Consider the F.B.D. of block *A* [Fig. 7.11(b)]**.**

$\Sigma F_y = 0$

$N_A - 500 \cos 50^o = 0$

$N_A = 500 \cos 50^o$

$\Sigma F_x = 0$

$T - 0.4\, N_A - 500 \sin 50^o = 0$

$T = 0.4 \times 500 \cos 50^o + 500 \sin 50^o$

$T = 511.58$ N

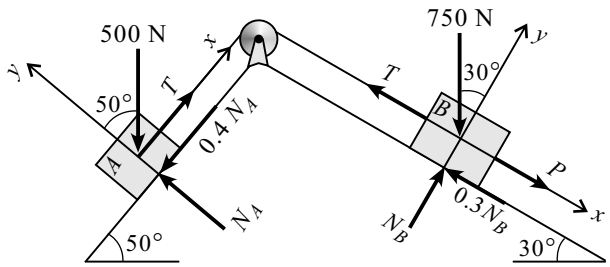

Fig. 7.11(b) : F.B.D. of Block *A* and Block *B*

(ii) Consider the F.B.D. of block *B* [Fig. 7.11(b)]**.**

$\Sigma F_y = 0$

$N_B - 750 \cos 30^o = 0$

$N_B = 750 \cos 30^o$

$\Sigma F_x = 0$

$P - 0.3\, N_B - T + 750 \sin 30^o = 0$

$P = 0.3 \times 750 \cos 30^o + 511.58 - 750 \sin 30^o$

$P = 331.44$ N $\left(\searrow 30^o\right)$

Problem 12

Find the value of θ if the blocks *A* and *B* shown in Fig. 7.12(a) have impending motion. Given block *A* = 20 kg, block *B* = 20 kg, $\mu_A = \mu_B = 0.25$.

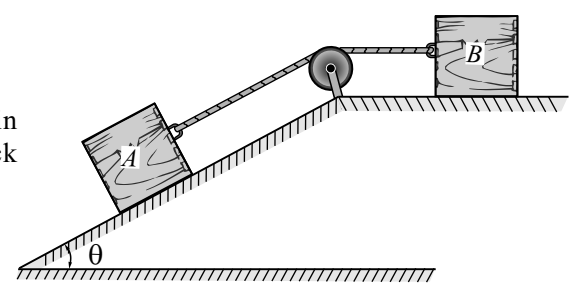

Fig. 7.12(a)

Solution

(i) Consider the F.B.D. of block *B* [Fig. 7.12(b)]**.**

$\Sigma F_y = 0$

$N_B - (20 \times 9.81) = 0$

$N_B = 20 \times 9.81$

$\Sigma F_x = 0$

$\mu\, N_B - T = 0$

$(0.25 \times 20 \times 9.81) - T = 0$

$T = 0.25 \times 20 \times 9.81$

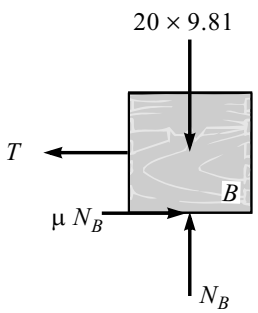

Fig. 7.12(b) : F.B.D. of Block *B*

(ii) Consider the F.B.D. of block *A* [Fig. 7.12(c)].

$\Sigma F_y = 0$

$N_A - (20 \times 9.81) \cos\theta = 0$

$N_A = (20 \times 9.81) \cos\theta$

$\Sigma F_x = 0$

$\mu N_A + T - (20 \times 9.81) \sin\theta = 0$

$(0.25 \times 20 \times 9.81) \cos\theta + (0.25 \times 20 \times 9.81)$

$\quad - (20 \times 9.81) \sin\theta = 0$

$0.25 \cos\theta + 0.25 - \sin\theta = 0$ (Multiply by 4)

$\cos\theta + 1 = 4 \sin\theta$

$2 \cos^2 (\theta/2) = 4 [2 \sin(\theta/2) . \cos(\theta/2)]$

$\frac{1}{4} = \tan\frac{\theta}{2} \Rightarrow \frac{\theta}{2} = \tan^{-1} 0.25$

$\therefore \theta = 28.07^o$

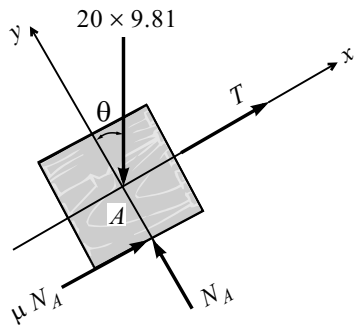

Fig. 7.12(c) : F.B.D. of Block *A*

Problem 13

Find the force *P* required to pull block *B* shown in Fig. 7.13(a). Coefficient of friction between *A* and *B* is 0.3 and between *B* and floor is 0.25. Weights of *A* = 20 kg and *B* = 30 kg.

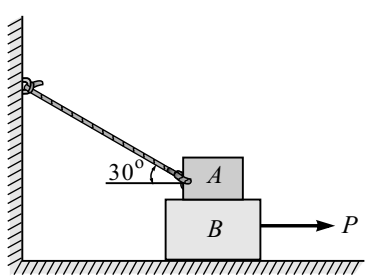

Fig. 7.13(a)

Solution

(i) Consider the F.B.D. of block *A* [Fig. 7.13(b)].

$\Sigma F_y = 0$

$N_A + T \sin 30^o - 20 \times 9.81 = 0$

$N_A = 20 \times 9.81 - T \sin 30^o$

$\Sigma F_x = 0$

$T \cos 30^o - 0.3 N_A = 0$

$T \cos 30^o - 0.3(20 \times 9.81 - T \sin 30^o) = 0$

$T = 57.93$ N and $N_A = 167.235$ N

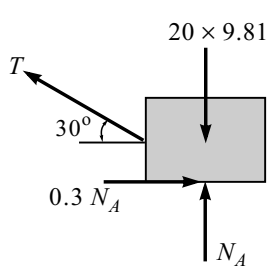

Fig. 7.13(b) : F.B.D. of Block *A*

(ii) Consider the F.B.D. of block *B* [Fig. 7.13(c)].

$\Sigma F_y = 0$

$N_B - 30 \times 9.81 - 167.06 = 0$

$N_B = 461.535$ N

$\Sigma F_x = 0$

$P - 0.3 N_A - 0.25 N_B = 0$

$P = (0.3 \times 167.06) + (0.25 \times 461.36)$

$P = 165.55$ N

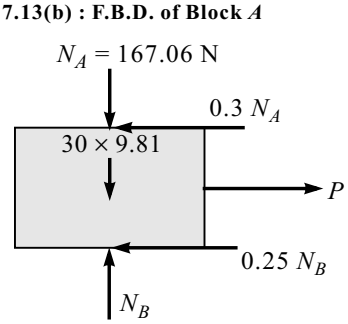

Fig. 7.13(c) : F.B.D. of Block *B*

Problem 14

Two blocks A = 100 N and B = 150 N are resting on the ground as shown in Fig. 7.14(a). Coefficient of friction between ground and block B is 0.10 and that between block B and A is 0.30. Find the minimum value of weight P in the pan so that motion starts. Find whether B is stationary w.r.t. ground and A moves or B is stationary w.r.t. A.

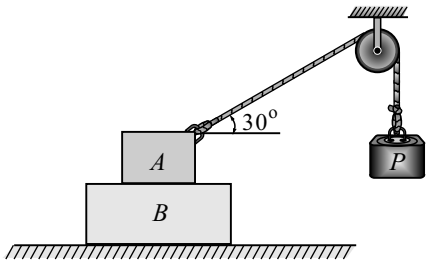

Fig. 7.14(a)

Solution

Case I : B is stationary w.r.t. ground and A moves.

Consider given A is in limiting equilibrium which means block A moves over the surface of B.

Consider the F.B.D. of block *A* [Fig. 7.14(b)].

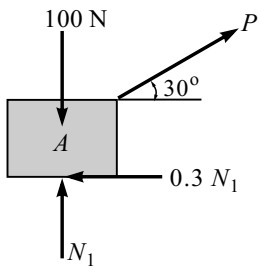

Fig. 7.14(b) : F.B.D. of Block *A*

$$\Sigma F_y = 0$$

$$N_1 + P \sin 30^\circ - 100 = 0$$

$$N_1 = 100 - P \sin 30^\circ$$

$$\Sigma F_x = 0$$

$$P \cos 30^\circ - 0.3\, N_1 = 0$$

$$P \cos 30^\circ - 0.3\,(100 - P \sin 30^\circ) = 0$$

$$P \cos 30^\circ - (0.3 \times 100) + 0.3\, P \sin 30^\circ = 0$$

$$P\,(\cos 30^\circ + 0.3 \sin 30^\circ) = 0.3 \times 100$$

$$P = \frac{0.3 \times 100}{\cos 30^\circ + 0.3 \sin 30^\circ} \quad \therefore\ P = 29.53 \text{ N}$$

Case II : B is stationary w.r.t. A

Consider both blocks A and B moving together.

Consider the F.B.D. of *A* and *B* together [Fig. 7.14(c)].

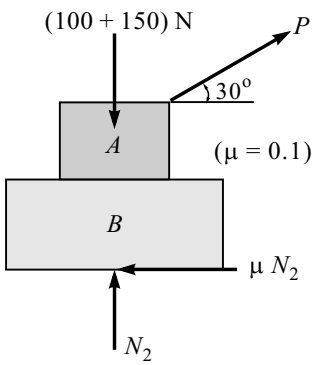

Fig. 7.14(c) : F.B.D. of Block *A* and *B* Together

$$\Sigma F_y = 0$$

$$N_2 - 250 + P \sin 30^\circ = 0$$

$$N_2 = 250 - P \sin 30^\circ$$

$$\Sigma F_x = 0$$

$$P \cos 30^\circ - \mu\, N_2 = 0$$

$$P \cos 30^\circ - 0.1\,(250 - P \sin 30^\circ) = 0$$

$$P \cos 30^\circ - (0.1 \times 250) + 0.1\, P \sin 30^\circ = 0$$

$$P\,(\cos 30^\circ + 0.1 \sin 30^\circ) = 0.1 \times 250$$

$$P = \frac{0.1 \times 250}{\cos 30^\circ + 0.1 \sin 30^\circ} \quad \therefore\ P = 27.29 \text{ N}$$

Referring to the answers of both the cases, we can declare 'Case II' is initiated first and therefore, minimum value of P_{min} = 27.29 N.

Problem 15

Block A of 30 kg mass rests on block B of mass 40 kg as shown in Fig. 7.15(a). Block A is restrained form moving by a horizontal rope tied at point C, what force P applied parallel to the plane inclined at 30° with horizontal is necessary to start block B down the plane. Take coefficient of friction for all surfaces as 0.35.

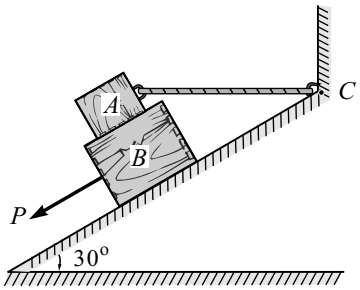

Fig. 7.15(a)

Solution

(i) Consider the F.B.D. of block *A* [Fig. 7.15(b)].

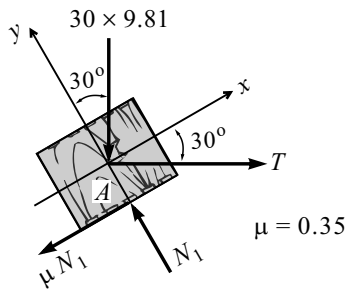

Fig. 7.15(b) : F.B.D. of Block *A*

$\Sigma F_y = 0$

$N_1 - 30 \times 9.81 \cos 30^\circ - T \sin 30^\circ = 0$

$N_1 = 30 \times 9.81 \cos 30^\circ + T \sin 30^\circ$ ... (I)

$\Sigma F_x = 0$

$T \cos 30^\circ - \mu N_1 - 30 \times 9.81 \sin 30^\circ = 0$

From Eq. (I),

$T \cos 30^\circ - 0.35 (30 \times 9.81 \cos 30^\circ + T \sin 30^\circ)$
$- 30 \times 9.81 \sin 30^\circ = 0$

$T = 342.04$ N

Substituting T in Eq. (I),

$N_1 = 30 \times 9.81 \cos 30^\circ + 342.04 \sin 30^\circ$

$N_1 = 425.89$ N

(ii) Consider the F.B.D. of block *B* [Fig. 7.15(c)].

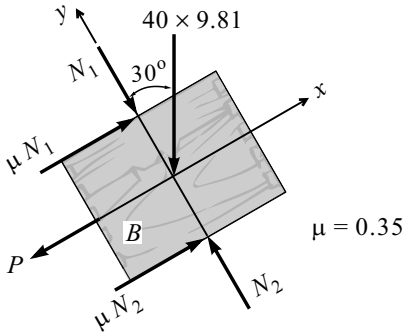

Fig. 7.15(c) : F.B.D. of Block *B*

$\Sigma F_y = 0$

$N_2 - N_1 - 40 \times 9.81 \cos 30^\circ = 0$

$N_2 = 425.89 + 40 \times 9.81 \cos 30^\circ$

$N_2 = 765.72$ N

$\Sigma F_x = 0$

$\mu N_1 + \mu N_2 - 40 \times 9.81 \sin 30^\circ - P = 0$

$P = 0.35 (425.89 + 765.72) - 40 \times 9.81 \sin 30^\circ$

$P = 220.86$ N

Problem 16

Block A has a mass of 20 kg and block B has a mass of 10 kg. Knowing that the coefficient of static friction is 0.15, between the two blocks and zero between block B and the slope, find the magnitude of the frictional force between the two masses. What is the force in the string tying the blocks ?

Refer to Fig. 7.16(a) for detail, take $g = 9.81$ m/s^2.

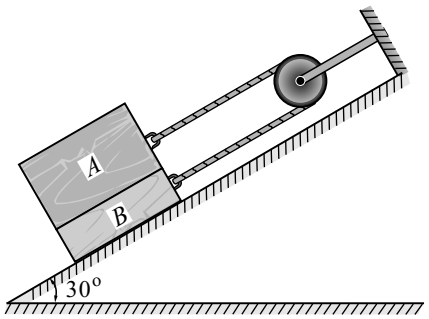

Fig. 7.16(a)

Solution

(i) Consider the F.B.D. of block *A* [Fig. 7.16(b)].

$\Sigma F_y = 0$

$N_1 - 20 \times 9.81 \cos 30^\circ = 0$

$N_1 = 169.91$ N

$\Sigma F_x = 0$

$T + F - 20 \times 9.81 \sin 30^\circ = 0$

$T + F = 98.1$ ... (I)

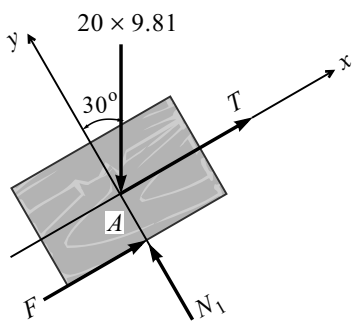

Fig. 7.16(b) : F.B.D. of Block *A*

(ii) Consider the F.B.D. of block *B* [Fig. 7.16(c)].

$\Sigma F_y = 0$

$N_2 - N_1 - 10 \times 9.81 \cos 30^\circ = 0$

$N_2 = 254.87$ N

$\Sigma F_x = 0$

$T - F - 10 \times 9.81 \sin 30^\circ = 0$

$T - F = 49.05$ ... (II)

Adding Eqs. (I) and (II), we get

$2T = 147.15$

$T = 73.56$ N

From Eq. (I), we get

$F = 24.53$ N

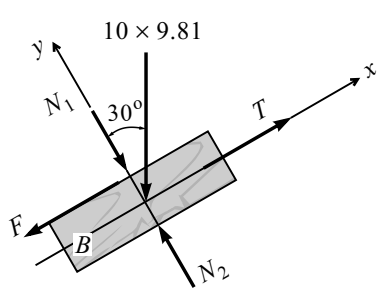

Fig. 7.16(c) : F.B.D. of Block *B*

The magnitude of the frictional force between the two masses is $F = 24.53$ N and force in the string tying the blocks is $T = 73.56$ N.

Problem 17

The coefficients of friction are $\mu_S = 0.3$ and $\mu_K = 0.25$ between all surfaces of contact. If a force of $P = 900$ N is applied as shown in Fig. 7.17(a), find the resultant of frictional force on 150 kg block.

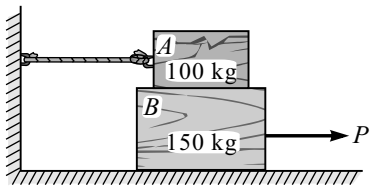

Fig. 7.17(a)

Solution

Case I : Let P be the force required to start the motion. Thus, consider the system to be in limiting equilibrium.

(i) Consider the F.B.D. of block *A* [Fig. 7.17(b)].

$\Sigma F_y = 0$

$N_1 = 100 \times 9.81$

$N_1 = 981$ N

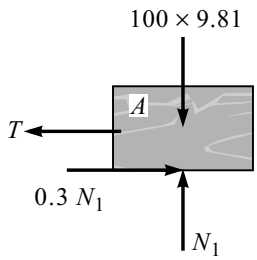

Fig. 7.17(b) : F.B.D. of Block *A*

(ii) Consider the F.B.D. of block *B* [Fig. 7.17(c)].

$\Sigma F_y = 0$

$N_2 - 981 - 150 \times 9.81 = 0$

$N_2 = 2452.5$ N

$\Sigma F_x = 0$

$P - 0.3\, N_1 - 0.3\, N_2 = 0$

$P = 0.3\,(981 + 2452.5)$

$P_{(\text{required})} = 1030.05$ N

Given $P = 900$ N

$\because P_{(\text{given})} < P_{(\text{required})}$

$\therefore$ The system is in static equilibrium.

$\therefore$ Resultant frictional force acting on block B,

$F_R = 900$ N

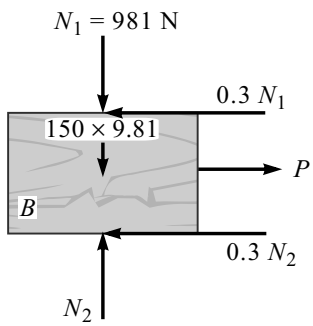

Fig. 7.17(c) : F.B.D. of Block *B*

Case II : Assume that system is already in motion. So $F_K = \mu_K N$ relation is applicable.

Let P be the force required to maintain the motion.

(i) Consider the F.B.D. of block *A* [Fig. 7.17(d)].

$\Sigma F_y = 0$

$N_1 - (100 \times 9.81) = 0$

$N_1 = 981$ N

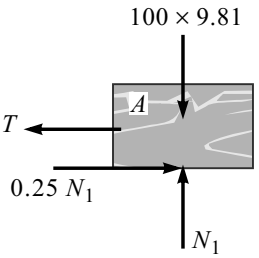

Fig. 7.17(d) : F.B.D. of Block *A*

(ii) Consider the F.B.D. of block *B* [Fig. 7.17(e)].

$\Sigma F_y = 0$

$N_2 - 981 - 150 \times 9.81 = 0$

$N_2 = 2452.5$ N

$\Sigma F_x = 0$

$P - 0.25\, N_1 - 0.25\, N_2 = 0$

$P = 0.25\,(981 + 2452.5)$

$P_{(\text{required})} = 858.38$ N

Given $P = 900$ N

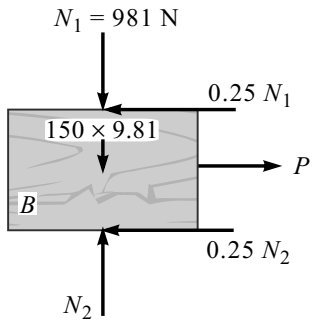

Fig. 7.17(e) : F.B.D. of Block *B*

$\because P_{(\text{given})} > P_{(\text{required})}$

$\therefore$ motion of system is maintained by applying $P = 900$ N.

$\therefore$ resultant frictional force acting on block B,

$F_R = 0.25\, N_1 + 0.25\, N_2$

$F_R = 858.38$ N

Note : $P = 858.38$ N force is required to maintain uniform motion but applied force is 900 N and it will accelerate the system.

Problem 18

Three blocks are placed on the surface one above the other as shown in Fig. 7.18(a). The static coefficient of friction between the blocks and block C and surface is also shown. Determine the maximum value of P that can be applied before any slipping takes place.

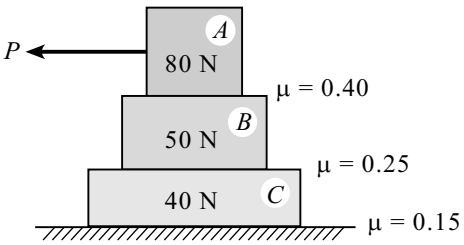

Fig. 7.18(a)

Solution

For P, there are three possibilities.

(i) Block A has impending motion and blocks B and C remains intact with each other and surface.

Consider the F.B.D. of block *A* [Fig. 7.18(b)].

$\Sigma F_y = 0$

$N_1 - 80 = 0$

$N_1 = 80$ N

$\Sigma F_x = 0$

$0.4N_1 - P = 0$

$P = 0.4 \times 80$

$P = 32$ N (←)

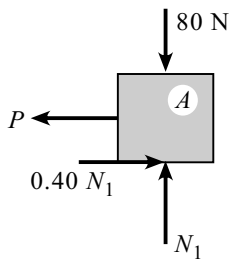

Fig. 7.18(b) : F.B.D. of Block *A*

(ii) Blocks *A* and *B* together has impending motion and block *C* remains intact with surface.

F.B.D. of blocks *A* and *B* together [Fig. 7.18(c)].

$\Sigma F_y = 0$

$N_2 - (80 + 50) = 0$

$N_2 = 130$ N

$\Sigma F_x = 0$

$0.25N_2 - P = 0$

$P = 0.25 \times 130$

$P = 32.5$ N (←)

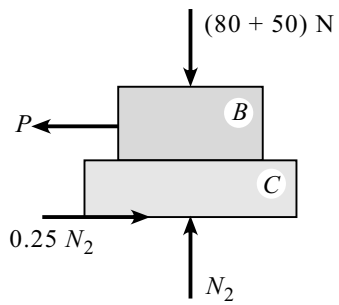

Fig. 7.18(c) : F.B.D. of Block *A* and Block *B* Together

(iii) All the three blocks *A*, *B* and *C* together have impending motion.

F.B.D. of blocks *A*, *B* and *C* together [Fig. 7.18(d)].

$\Sigma F_y = 0$

$N_3 - (50 + 80 + 40) = 0$

$N_3 = 170$ N

$\Sigma F_x = 0$

$0.15\, N_3 - P = 0$

$P = 0.15 \times 170$

$P = 25.5$ N

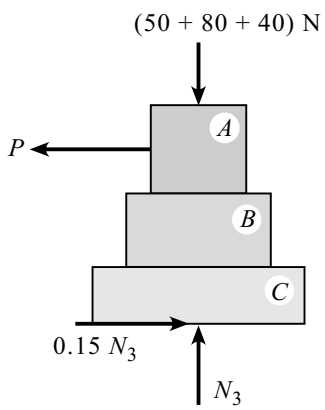

Fig. 7.18(d) : F.B.D. of Block *A* and Block *B* and Block *C* Together

(iv) Comparing all three cases, we conclude that $P_{max} = 25.5$ N before any slipping takes place.

Problem 19

Find the maximum height at which P should be applied so that the body would just slide without tipping. Also state magnitude of P. Refer to Fig. 7.19(a).

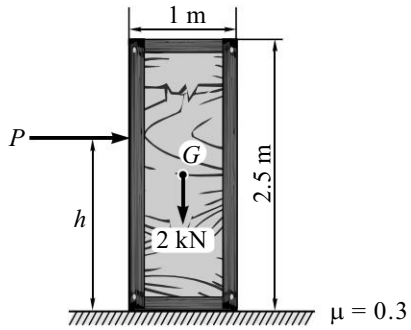

Fig. 7.19(a)

Solution

Consider the F.B.D. of the block [Fig. 7.19(b)]

$\Sigma F_y = 0$

$N - 2 = 0$

$N = 2$ kN

$\Sigma F_x = 0$

$P - \mu N = 0$

$P = 0.3 \times 2$

$P = 0.6$ kN

$\Sigma M_A = 0$

$2 \times 0.5 - P \times h = 0 \quad \Rightarrow \quad h = \dfrac{2 \times 0.5}{0.6}$

$h = 1.67$ m

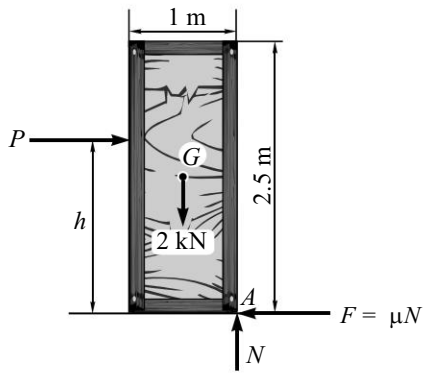

Fig. 7.19(b) : F.B.D. of Block

Problem 20

A homogeneous block A of weight W rests upon an inclined plane as shown in Fig. 7.20(a). $\mu = 0.3$. Determine the greatest height at which a force P parallel to the inclined plane may be applied so that the block will slide up the plane without tipping over.

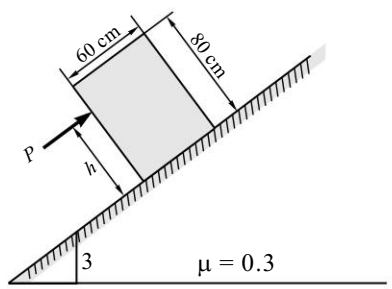

Fig. 7.20(a)

Solution

Consider the F.B.D. of block *A* [Fig. 7.20(b)].

$\Sigma F_y = 0$

$N - W \cos\theta = 0$

$N = W \cos 36.87^\circ$

$\Sigma F_x = 0$

$P - \mu N - W \sin\theta = 0$

$P = 0.3 \times W \cos 36.87^\circ + W \sin 36.87^\circ$

$P = 0.84\, W$ N

$\Sigma M_A = 0$

$W \cos\theta \times 30 + W \sin\theta \times 40 - P \times h = 0$

$W \cos 36.87^\circ \times 30 + W \sin 36.87^\circ \times 40 - 0.84\, W \times h = 0$

$h = 57.14$ cm

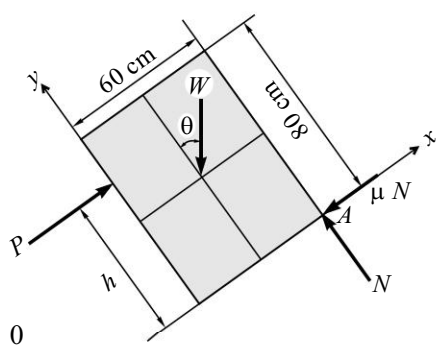

Fig. 7.20(b) : F.B.D. of Block *A*

Wedge : A tapper shaped block with very less angle which are used for lifting or shifting or holding the heavy block by very less effort is called a *wedge*. The lifting or shifting of the distance is very small. While installing heavy machinery horizontal levelling is required with zero error. It is possible to adjust the small height by inserting wedge as a packing. Sometimes, combination of wedge is also used to push or shift heavy bodies by little distance. Simple lifting machine such as screw jack is based on principle of wedge which is used to raise or lower the heavy load by small effort.

Problem 21

A block of 150 kg mass is raised by a 10° wedge weighing 50 kg under it and by applying a horizontal force at it as shown in Fig. 7.21(a). Taking coefficient of friction between all surfaces of contact as 0.3, find what minimum force should be applied to raise the block.

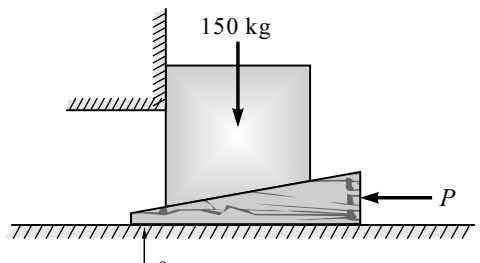

Fig. 7.21(a)

Solution

(i) Consider the F.B.D. of 150 kg block [Fig. 7.21(b)].

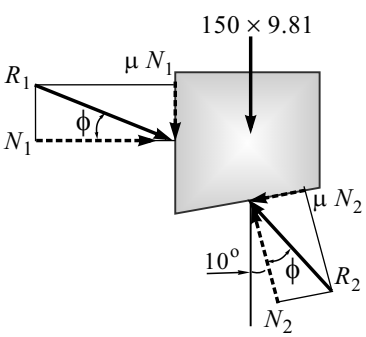

Fig. 7.21(b) : F.B.D. of Block

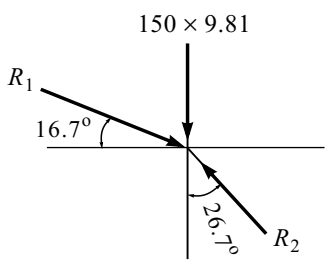

$$\tan \phi = \mu = 0.3$$

$$\therefore \phi = 16.7^o$$

By Lami's theorem, we have

$$\frac{R_2}{\sin (90 - 16.7)^o} = \frac{150 \times 9.81}{\sin (90 + 16.7 + 26.7)^o}$$

$$\therefore R_2 = 1939.84 \text{ N}$$

(ii) Consider the F.B.D. of the wedge [Fig. 7.21(c)].

$$\Sigma F_y = 0$$

$$N_2 - (50 \times 9.81) - 1929.84 \cos 26.7^o = 0$$

$$N_2 = 2223.5 \text{ N}$$

$$\Sigma F_x = 0$$

$$\mu N_2 + 1939.84 \sin 26.7^o - P = 0$$

$$P = (0.3 \times 2223.5) + 1939.84 \sin 26.7^o$$

$$P = 1538.66 \text{ N}$$

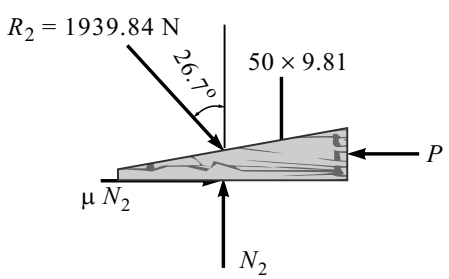

Fig. 7.21(c) : F.B.D. of Wedge

Problem 22

The block, as shown in Fig. 7.22(a), supports a load W = 5000 N and is to be raised by forcing the wedge B under it. The angle of friction for all surfaces for contact is $\phi = 15^o$. Determine the force P which is necessary to start the wedge under the block. The block and wedge have negligible weight.

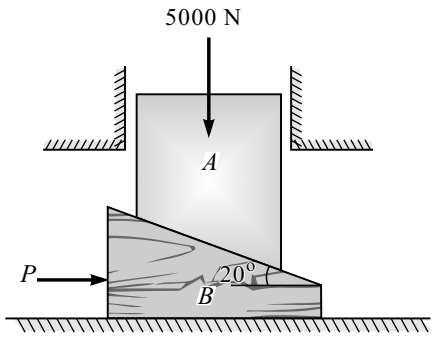

Fig. 7.22(a)

Solution

(i) Consider the F.B.D. of block *A* [Fig. 7.22(b)].

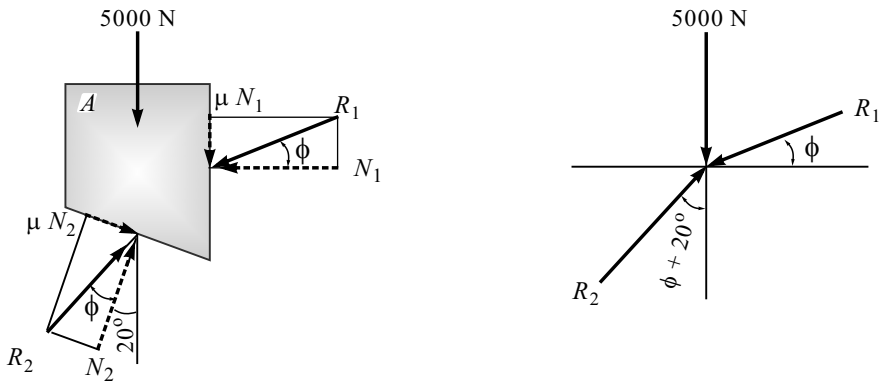

Fig. 7.22(b) : F.B.D. of Block *A*

By Lami's theorem, we have

$$\frac{5000}{\sin(\phi + 20 + 90 + \phi)^o} = \frac{R_2}{\sin(90 - \phi)^o}$$

$$\therefore \; R_2 = \frac{5000 \sin 75^o}{\sin 140^o}$$

$$\therefore \; R_2 = 7513.57 \text{ N}$$

(ii) Consider the F.B.D. of wedge *B* [Fig. 7.22(c)].

By Lami's theorem, we have

$$\frac{P}{\sin 130^o} = \frac{7513.57}{\sin 105^o}$$

$$\therefore \; P = 5958.77 \text{ N}$$

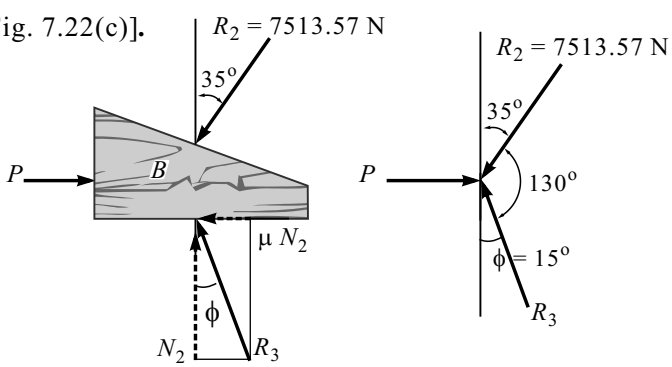

Fig. 7.22(c) : F.B.D. of Wedge

Problem 23

Two 6° wedges are used to push a block horizontally as shown in Fig. 7.23(a). Calculate the minimum force required to push the block of 10 kN weight. Take μ = 0.25 for all contact surfaces.

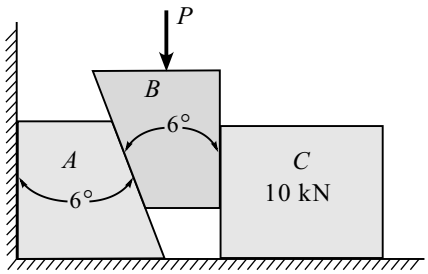

Fig. 7.23(a)

Solution

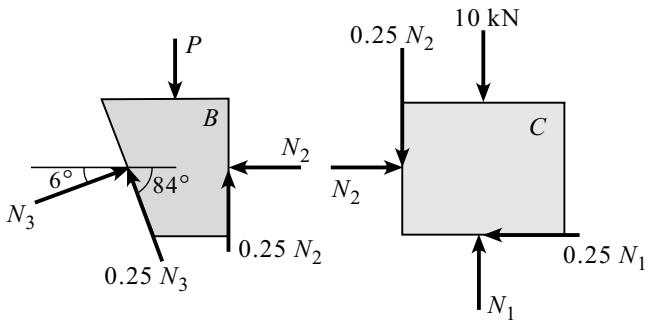

Fig. 7.23(b) : F.B.D. of Wedge *B* and Block *C*

(i) Consider the F.B.D. of block *C* [Fig. 7.23(b)]**.**

$\Sigma F_y = 0$

$N_1 - 10 - 0.25N_2 = 0$

$\therefore N_1 = 10 + 0.25N_2$

$\Sigma F_x = 0,$

$N_2 - 0.25N_1 = 0$

$N_2 - 0.25(10 + 0.25N_2) = 0$

$\therefore N_2 = 2666.7$

(ii) Consider the F.B.D. of wedge *B* [Fig. 7.23(b)]**.**

$\Sigma F_x = 0$

$N_3 \cos 6^o - N_2 - 0.25N_3 \cos 84^o = 0$

$0.9684N_3 = N_2$

$N_3 = 2.754$

$\Sigma F_y = 0$

$N_3 \sin 6^o + 0.25N_3 \sin 84^o + 0.25\, N_2 - P = 0$

$P = 1.639$ kN

Problem 24

Determine the force P required to move the block A of 5000 N weight up the inclined plane. Coefficient of friction between all contact surfaces is 0.25. Neglect the weight of the wedge and the wedge angle is 15 degrees.

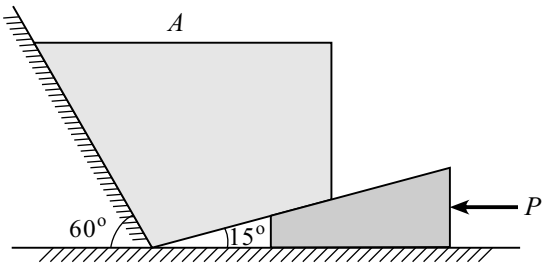

Fig. 7.24(a)

Solution

(i) Consider the F.B.D. of block *A* [Fig. 7.24(b)]**.**

$\Sigma F_x = 0$

$N_1 \cos 30^\circ + 0.25N_1 \cos 60^\circ$

$\quad - 0.25N_2 \cos 15^\circ - N_2 \cos 75^\circ = 0$

$0.860N_1 + 0.125N_1 - 0.241N_2 - 0.2588N_2 = 0$

$0.991N_1 = 0.499N_2$

$\therefore N_1 = 0.5165N_2$

$\Sigma F_y = 0$

$N_2 \sin 75^\circ + N_1 \sin 30^\circ - 5000$

$\quad - 0.25N_1 \sin 60^\circ - 0.25N_2 \sin 15^\circ = 0$

$0.966N_2 + 0.5N_1 - 5000 - 0.2165N_1 - 0.0647N_2 = 0$

Substituting the value of N_1

$0.966N_2 + 0.2583N_2 - 0.1118N_2 - 0.0647N_2 = 5000$

$\therefore N_2 = 4772.3585$ N

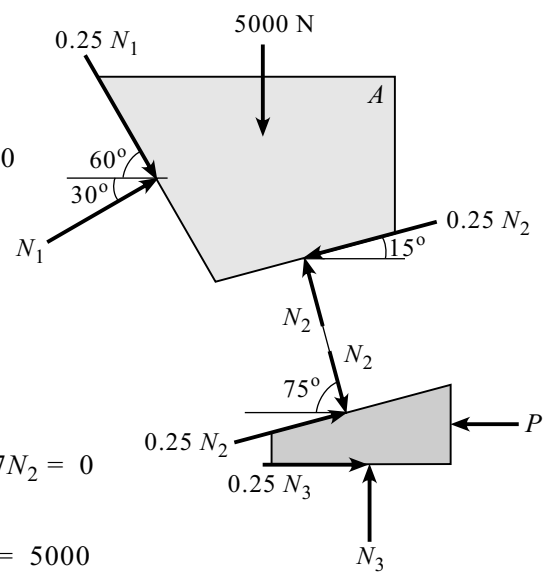

Fig. 7.24(b) : F.B.D. of Block *A* and Wedge

(ii) Consider the F.B.D. of wedge *B* [Fig. 7.24(b)]**.**

$\Sigma F_y = 0$

$N_3 + 0.25N_2 \sin 15^\circ - N_2 \sin 75^\circ = 0$

$N_3 + 308.79 - 4609.744 = 0$

$N_3 = 4300.95$ N

$\Sigma F_y = 0$

$0.25N_3 + 0.25N_2 \cos 15^\circ + N_2 \cos 75^\circ - P = 0$

$1075.23 + 1152.436 + 123.17 = P$

$P = 3462.84$ N

Ladder : Many a times, we come across the uses of ladder for attending the higher height. Ladders are used by painters and carpenters who want to peg a nail in the wall for mounting a photo frame. We observe that care is taken to place the ladder at appropriate angle with respect to ground and wall. We try to adjust the friction offered by the ground and wall in contact with ladder. Also sometimes we prefer to hold the ladder by a person for safety purposes. The forces acting on ladder are normal reactions, frictional forces between the ground, the wall and the ladder, weight of the ladder and the weight of the man climbing the ladder. Considering the free body diagram of ladder, we get a general force system. The simplification of the system by considering equilibrium condition can be worked out by following equations :

$$\Sigma F_x = 0 \; ; \; \Sigma F_y = 0 \text{ and } \Sigma M = 0$$

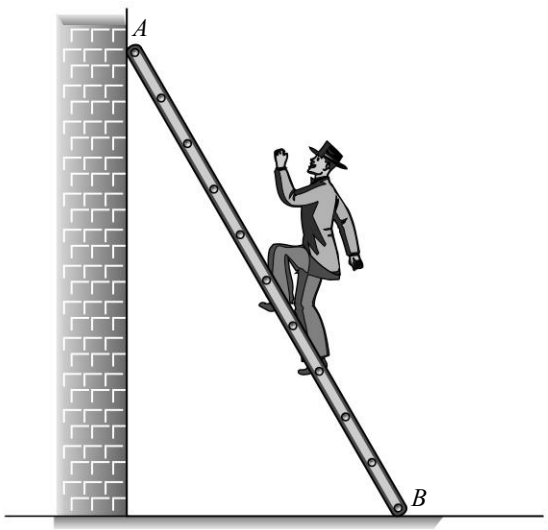

Fig. 7.25(a)

Problem 25

A uniform ladder weighing 100 N and 5 metres long has lower end B resting on the ground and upper end A resting against a vertical wall as shown in Fig. 7.25(a). The inclination of the ladder with horizontal is 60°. If the coefficient of friction at all surfaces of contact is 0.25, determine how much distance up along the ladder a man weighing 600 N can ascent without causing it to slip.

Solution

Consider the F.B.D. of the ladder [Fig. 7.25(b)].

$$\Sigma F_x = 0$$

$$N_A - \mu N_B = 0$$

$$N_B = 4 N_A$$

$$\Sigma F_y = 0$$

$$\mu N_A + N_B - 100 - 600 = 0$$

$$0.25 N_A + 4 N_A = 700$$

$$N_A = 164.71$$

$$\Sigma M_B = 0$$

$$100 \times 2.5 \cos 60^o + 600 \times d \cos 60^o - N_A \times 5 \sin 60^o - \mu N_A \times 5 \cos 60^o = 0$$

$$100 \times 2.5 \cos 60^o + 600 \times d \cos 60^o - 164.71 \times 5 \sin 60^o - 0.25 \times 164.71 \times 5 \cos 60^o = 0$$

$$d = 2.304 \text{ m}$$

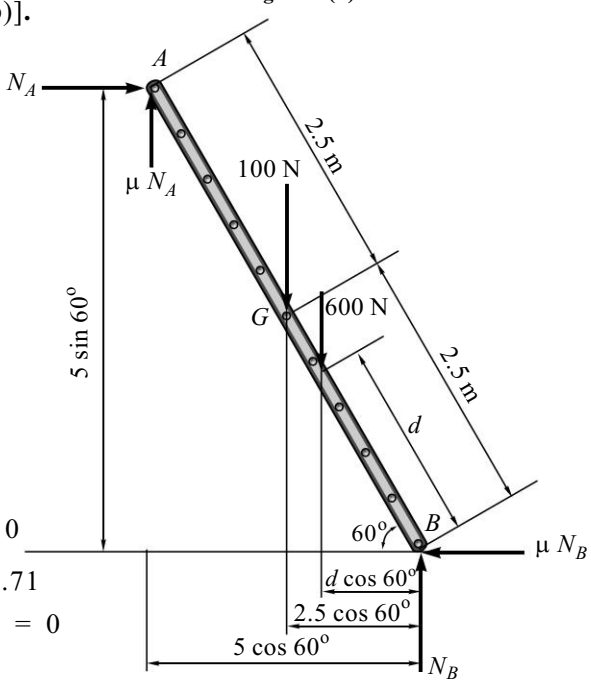

Fig. 7.25(b) : F.B.D. of the Ladder

Problem 26

A weightless ladder of 8 m length is resting against a smooth vertical wall and rough horizontal ground as shown in Fig. 7.26(a). The coefficient of friction between ground and ladder is 0.25. A man of 500 N weight wants to climb up the ladder. The man can climb without slip. A second person weighting 800 N wants to climb up the same ladder. Would he climb less than the earlier person? Find the distance covered.

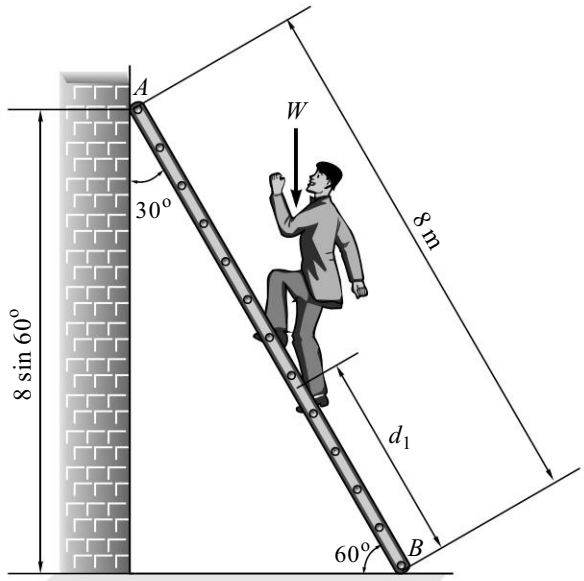

Fig. 7.26(a)

Solution

Case I : W = 500 N

$$\Sigma F_x = 0$$

$$N_A - \mu N_B = 0$$

$$N_A = 0.25\, N_B$$

$$\Sigma F_y = 0$$

$$N_B - 500 = 0$$

$$N_B = 500 \text{ N}$$

$$\therefore\ N_A = 125 \text{ N}$$

$$\Sigma M_B = 0$$

$$500 \times d_1 \cos 60^\circ - N_A \times 8 \sin 60^\circ = 0$$

$$d_1 = \frac{125 \times 8 \sin 60^\circ}{500 \cos 60^\circ}$$

$$d_1 = 3.464 \text{ m}$$

Case II : W = 800 N

$$\Sigma F_x = 0$$

$$N_A - \mu N_B = 0$$

$$N_A = 0.25\, N_B$$

$$\Sigma F_y = 0$$

$$N_B - 800 = 0$$

$$N_B = 800 \text{ N}$$

$$\therefore\ N_A = 200 \text{ N}$$

$$\Sigma M_B = 0$$

$$800 \times d_2 \cos 60^\circ - N_A \times 8 \sin 60^\circ = 0$$

$$d_2 = \frac{200 \times 8 \sin 60^\circ}{800 \cos 60^\circ}$$

$$d_2 = 3.464 \text{ m}$$

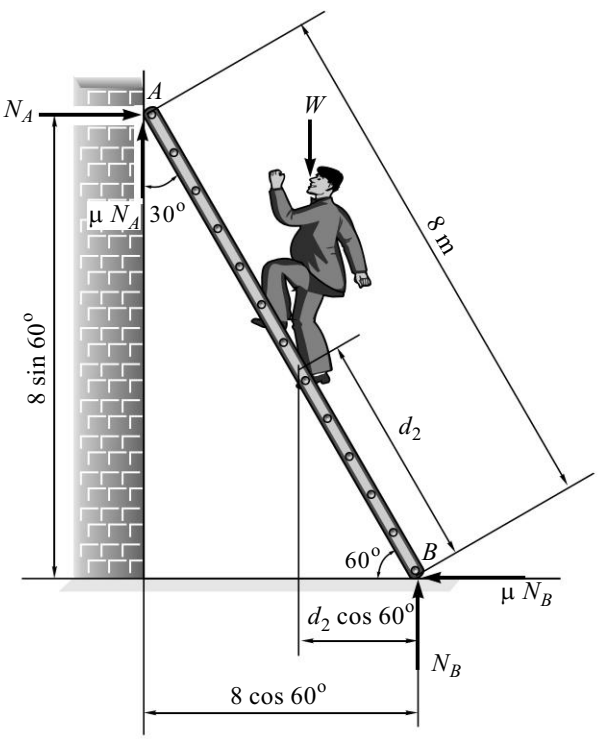

Fig. 7.26(b) : F.B.D. of Rod *AB*

Problem 27

A 100 N uniform rod AB is held in the position as shown in Fig. 7.27(a). If coefficient of friction is 0.15 at A and B. Calculate range of values of P for which equilibrium is maintained.

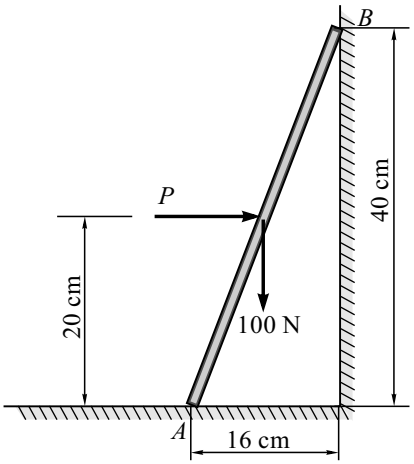

Fig. 7.27(a)

Solution

Case I : For $P_{minimum}$

Consider F.B.D. of rod AB when P is minimum and in limiting equilibrium condition the tendency of rod will be to slip in downward direction [Fig. 7.27(b)].

$$\Sigma F_x = 0$$

$$P_{min} + \mu N_A - N_B = 0$$

$$P_{min} = N_B - 0.15 N_A \quad \text{... (I)}$$

$$\Sigma F_y = 0$$

$$N_A + \mu N_B - 100 = 0$$

$$N_A + 0.15 N_B = 100 \quad \text{... (II)}$$

$$\Sigma M_A = 0$$

$$\mu N_B \times 16 + N_B \times 40 - 100 \times 8 - P_{min} \times 20 = 0$$

$$0.15 N_B \times 16 + N_B \times 40 - 800 - (N_A - 0.15 N_A) \times 20 = 0$$

$$3 N_A + 22.4 N_B = 800 \quad \text{... (III)}$$

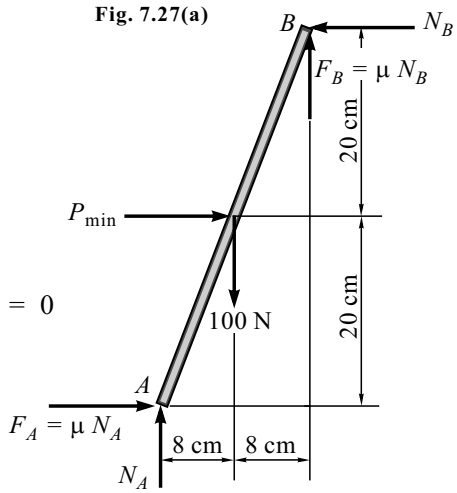

Fig. 7.27(b) : F.B.D. of Rod AB for P_{min}

Solving Eqs. (II) and (III),

$$N_A = 96.58 \text{ N}$$

$$N_B = 22.78 \text{ N}$$

From Eq. (I),

$$P_{min} = 22.78 - 0.15 \times 96.58$$

$$P_{min} = 8.29 \text{ N}$$

Case II : For $P_{maximum}$

Consider F.B.D. of rod AB when P is maximum and in limiting equilibrium condition the tendency of rod will be to slip in upward direction [Fig. 7.27(c)].

$$\Sigma F_x = 0$$

$$P_{max} - \mu N_A - N_B = 0$$

$$P_{max} = 0.15 N_A + N_B \quad \text{... (IV)}$$

$$\Sigma F_y = 0$$

$$N_A - \mu N_B - 100 = 0$$

$$N_A - 0.15 N_B = 100 \quad \text{... (V)}$$

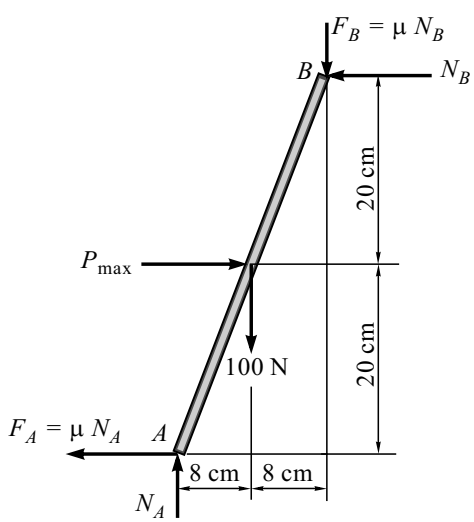

Fig. 7.27(c) : F.B.D. of Rod AB for P_{max}

$$\Sigma M_A = 0$$

$$N_B \times 40 - \mu N_B \times 16 - P_{max} \times 20 - 100 \times 8 = 0$$

$$N_B \times 40 - 0.15 N_B \times 16 - (0.15 N_A + N_B) \times 20 - 800 = 0$$

$$17.6 N_B - 3 N_A = 800 \qquad \text{... (VI)}$$

Solving Eqs. (V) and (VI),

$$N_A = 109.62 \text{ N and } N_B = 64.14 \text{ N}$$

From Eq. (IV),

$$P_{max} = 80.58 \text{ N}$$

Problem 28

Determine the minimum value and the direction of a force P required to cause motion of a 100 kg block to impend upon a 30° plane shown in Fig. 7.28(a). The coefficient of friction is 0.2.

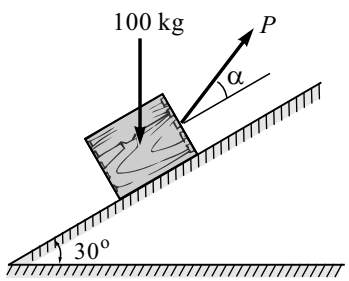

Fig. 7.28(a)

Solution

Consider the F.B.D. of the block *B* [Fig. 7.28(b)]**.**

$$\tan \phi = \mu = 0.2$$

$$\therefore \phi = 11.31^\circ$$

By Lami's theorem,

$$\frac{100 \times 9.81}{\sin (48.69 + 30 + \alpha)^\circ} = \frac{-P_{min}}{\sin (180 + 30 + \phi)^\circ}$$

$$P_{min} = \frac{-981 \sin (221.31)^\circ}{\sin (78.69 + \alpha)^\circ} \qquad \text{... (I)}$$

For P to be minimum, denominator

$$\sin (78.69 + \alpha)^\circ = 1 \text{ (i.e., maximum)}$$

$$78.69 + \alpha = 90$$

$$\therefore \alpha = 11.31^\circ$$

From Eq. (I),

$$P_{min} = 647.59 \text{ N}$$

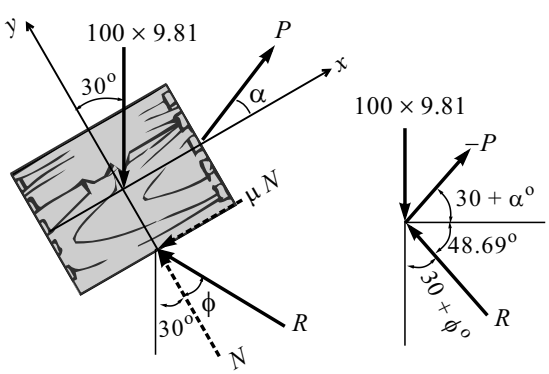

Fig. 7.28(b) : F.B.D. of Block *B*

Problem 29

Figure 7.29(a) shows a block A held in equilibrium on an inclined plane by a moment M applied to link BC. Link AB and link BC are hinged at B. The weight of the block is 10 kN. The rod BC is 2 m long. Assume the links to be weightless and hinges to be ideally smooth. Calculate M to just start the motion of the block upwards. Take coefficient of friction between block and the plane to be 0.2.

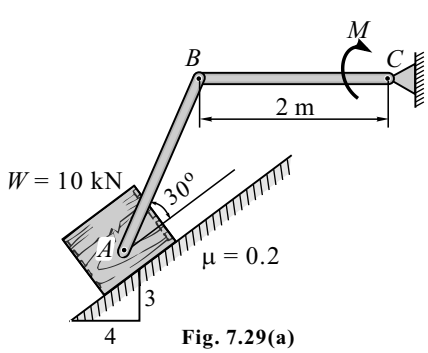

Fig. 7.29(a)

Solution

(i) Consider the F.B.D. of the block *A* [Fig. 7.29(b)].

By Lami's theorem, we have

$$\frac{10}{\sin(66.87 + 41.82)^{\circ}} = \frac{-F_{AB}}{\sin(270 - 41.82)^{\circ}}$$

$$F_{AB} = \frac{-10 \sin 228.18^{\circ}}{\sin 108.69^{\circ}}$$

$$\therefore \; F_{AB} = 7.867 \text{ kN}$$

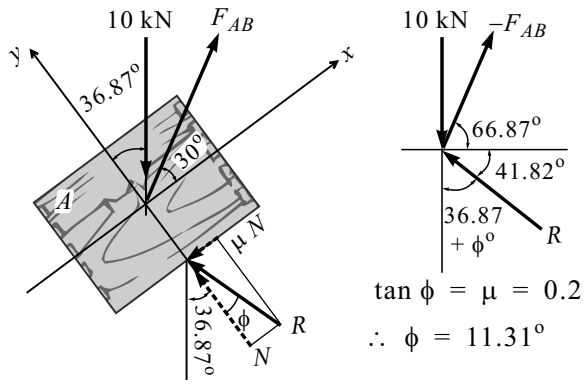

Fig. 7.29(b) : F.B.D. of Block

(ii) Consider the F.B.D. of link *BC* [Fig. 7.29(c)].

$$\Sigma M_C = 0$$

$$7.867 \sin 66.87^{\circ} \times 2 - M_C = 0$$

$$M_C = 14.47 \text{ kN-m } (\circlearrowleft)$$

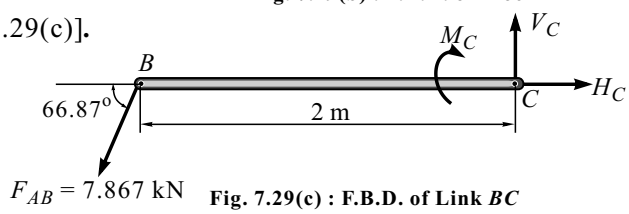

Fig. 7.29(c) : F.B.D. of Link *BC*

Problem 30

Figure 7.30 shows a cylinder of 100 kg mass resting on a floor and against a wall. If the coefficient of friction between the surface of contact is 0.25, find whether the cylinder will slip with the tangential horizontal force of 180 N.

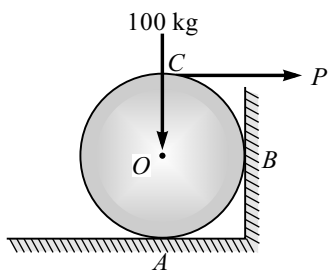

Fig. 7.30(a)

Solution

Consider the F.B.D. of the cylinder [Fig. 7.30(b)].

Let r be the radius of cylinder and P be the force required to just slip the cylinder.

$$\Sigma M_A = 0$$

$$-(P \times 2r) + (\mu N_B \times r) + (N_B \times r) = 0$$

$$N_B = 1.6\,P$$

$$\Sigma F_x = 0$$

$$P - N_B + \mu N_A = 0$$

$$P - 1.6\,P + \mu N_A = 0$$

$$N_A = 2.4\,P$$

$$\Sigma F_y = 0$$

$$\mu N_B + N_A - 100 \times 9.81 = 0$$

$$0.25 \times 1.6\,P + 2.4\,P = 981$$

$$P = 350.36 \text{ N}$$

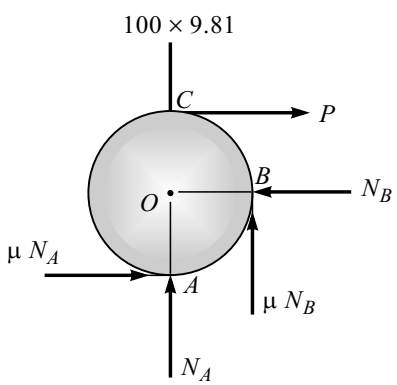

Fig. 7.30(b) : F.B.D. of Cylinder

Since the required P = 350.36 N is greater than given P = 180 N, therefore, the cylinder will not slip with the tangential horizontal force of 180 N. Cylinder is in static equilibrium condition.

Problem 31

A 10 kg block is attached to link AB and rests on a conveyor belt, which is moving to the right as shown in Fig. 7.31(a). The coefficients of friction between the block and belt are $\mu_S = 0.30$ and $\mu_K = 0.25$, determine **(i)** the force in link AB and **(ii)** the horizontal force which should be applied to the belt to maintain its motion.

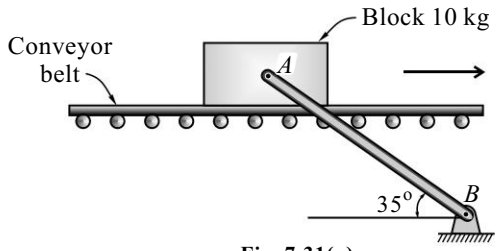

Fig. 7.31(a)

Solution

It is stated that the conveyor belt is moving.

$\therefore\ F_K = \mu_K N$ relation is applicable.

Link AB is a straight link connected at extreme end by pins. So, it can be treated as two-force member.

(i) Consider the F.B.D. of the block A [Fig. 7.31(b)].

Conveyor belt is moving towards right. Therefore, relative motion of block is toward left. So the direction of frictional force $F_K = \mu_K N$ should be opposite to the direction of relative motion (i.e., towards right).

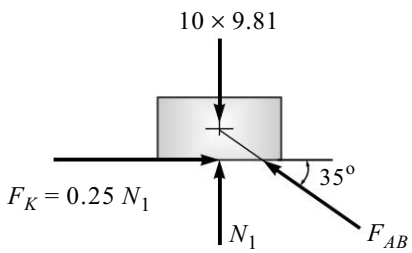

Fig. 7.31(b) : F.B.D. of Block

$\Sigma F_x = 0$

$0.25\ N_1 - F_{AB} \cos 35^\circ = 0$

$F_{AB} = 0.305\ N_1$ ... (I)

$\Sigma F_y = 0$

$N_1 + F_{AB} \sin 35^\circ - 10 \times 9.81 = 0$

$N_1 + 0.305\ N_1 \sin 35^\circ = 98.1$

$$N_1 = \frac{98.1}{1 + 0.305 \sin 35^\circ}$$

$N_1 = 83.49$ N

From Eq. (I),

$F_{AB} = 0.305 \times 83.49$

$F_{AB} = 25.46$ N

(ii) Consider the F.B.D. of the belt [Fig. 7.31(c)].

$\Sigma F_x = m\,a_x = 0 \qquad (\because a_x = 0)$

$P - 0.25\ N_1 = 0$

$P = 0.25 \times 83.49$

$P = 20.87$ N

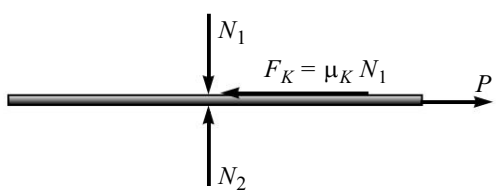

Fig. 7.31(c) : F.B.D. of Belt

SUMMARY

- **Friction :** When a body moves or tends to move over another body, a force opposing the motion develops at the contact surfaces. Whenever a tendency exists for one contacting surfaces to slide along another surface, tangential force is generated between contacting surface. This force which opposes the movement or tendency of movement is called frictional force or simply friction.

- **Coefficient of Friction :** By experimental evidence it is proved that limiting frictional force is directly proportional to normal reaction.

$$F_{max} \propto N$$

- **Coefficient of Static Friction :** The ratio of limiting frictional force (F_{max}) and normal reaction (N) is a constant. This constant is called the coefficient of static friction (μ_S).

$$\mu_S = \frac{F_{max}}{N}$$

- **Coefficient of Kinetic Friction :** The ratio of kinetic frictional force (F_K) and normal reaction (N) is a constant. This constant is called the coefficient of kinetic friction (μ_K).

$$\mu_K = \frac{F_K}{N}$$

- **Laws of Friction**
  1. The frictional force is always tangential to the contact surface and acts in a direction opposite to that in which the body tends to move.
  2. The magnitude of frictional force is self-adjusting to the applied force till the limiting frictional force is reached and at the limiting frictional force the body will have impending motion.
  3. Limiting frictional force F_{max} is directly proportional to normal reactions ($F_{max} = \mu_S N$).
  4. For body in motion, kinetic frictional force F_K developed is less than that of limiting frictional force F_{max} and the relation $F_K = \mu_K N$ is applicable.
  5. Frictional force depends upon the roughness of the surface and the material in contact.
  6. Frictional force is independent of the area of contact between the two surfaces.
  7. Frictional force is independent of the speed of the body.
  8. Coefficient of static friction μ_S is always greater than the coefficient of kinetic friction μ_K.

- **Angle of Friction :** It is the angle made by the resultant of the limiting frictional force F_{max} and the normal reaction N with the normal reactions.

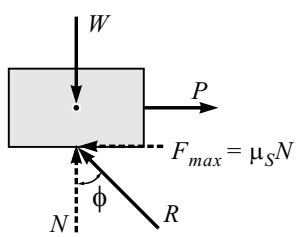

$$\mu_S N = R \sin \phi \quad \text{... (I)}$$

$$N = R \cos \phi \quad \text{... (II)}$$

Dividing Eq. (I) by Eq. (II), we get

$$\tan \phi = \mu_S$$

- **Angle of Repose :** It is the minimum angle of inclination of a plane with the horizontal at which the body kept will just slide down on it without the application of any external force (due to self weight).

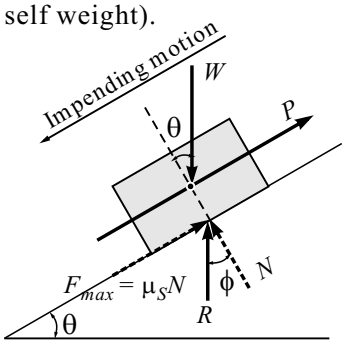

Angle of friction ϕ = Angle of repose θ

- **Types of Friction Problems**

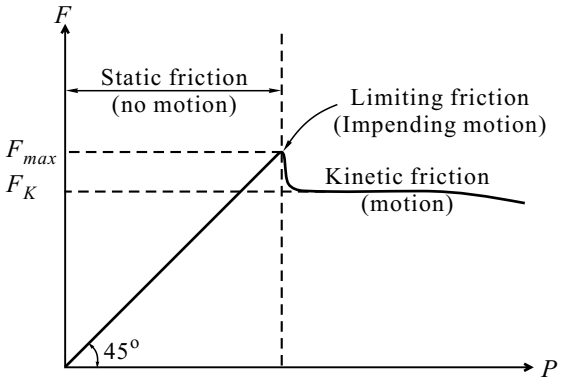

EXERCISES

[I] Problems

1. A wooden block rests on a horizontal plane as shown in Fig. 7.E1. Determine the force P required to just impend motion. Assume the weight of the block as 100 N and the coefficient of friction $\mu = 0.4$.

[***Ans.*** $P = 37.4$ N]

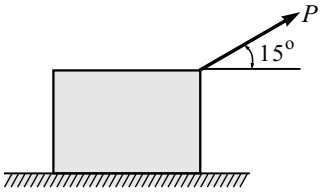

Fig. 7.E1

2. A 100 N force acts as shown in Fig. 7.E2, on a 30.6 kg block on a inclined plane. The coefficient of friction between the block and the plane are $\mu_s = 0.25$ and $\mu_k = 0.20$. Determine whether the block is in equilibrium and find the value of the friction force. Take $g = 9.81$ m/sec^2.

[***Ans.*** $F = 48$ N , block will slide down]

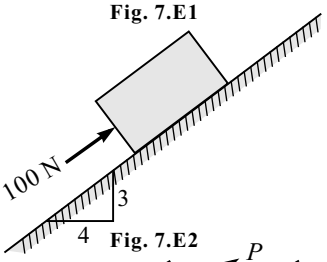

Fig. 7.E2

3. Block of 1000 N weight is kept on an inclined plane as shown in Fig. 7.E3. A force P is applied parallel to plane to keep the body in equilibrium. Determine range of values of P for which the block will be in equilibrium.

[***Ans.*** $370.1 \le P \le 629.9$ N]

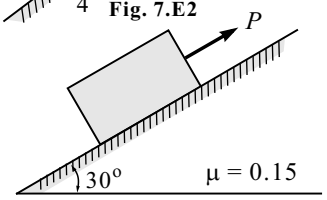

Fig. 7.E3

4. Block A of 2000 N weight is kept on an inclined plane at 35° as shown in Fig. 7.E4. It is connected to a weight B by an inextensible string passing over smooth pulley. Determine the weight of B so that B just moves down. $\mu = 0.2$.

[***Ans.*** 1463.1 N]

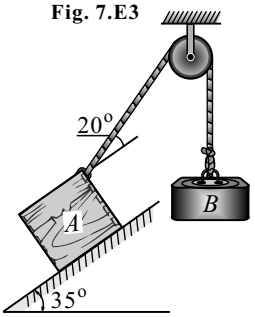

Fig. 7.E4

5. In Fig. 7.E5, the two blocks (W_1 = 30 N and W_2 = 50 N) are placed on rough horizontal plane. Coefficient of friction between the block A and plane is 0.3 and that between B and plane is 0.2. Find the minimum value of the force P to just move the system. Also find the tension in the string.

[***Ans.*** P = 19.67 N and T = 9 N]

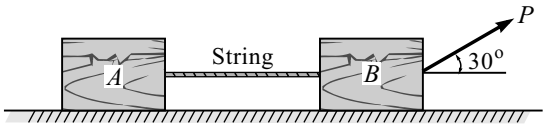

Fig. 7.E5

6. In Fig. 7.E6, weights of two blocks A and B are 100 N and 150 N respectively. Find the smallest value of the horizontal force F to just move the lower block B if

(a) the block is restrained by a string, and

(b) when string is removed.

[***Ans.*** (a) 82.5 N (b) 62.5 N]

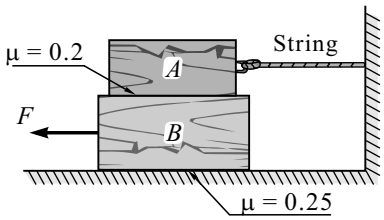

Fig. 7.E6

7. Determine the necessary force P acting parallel to the plane to cause motion to impend shown in Fig. 7.E7. Assume coefficient of friction as 0.25 and the pulley to be smooth.

[***Ans.*** P = 98.85 N]

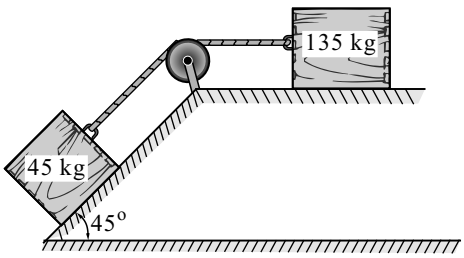

Fig. 7.E7

8. A 500 N weight just starts moving down a rough inclined plane support by a force of 200 N acting parallel to the plane and it is at the point of moving up the plane when pulled by a force of 300 N parallel to the plane. Find the inclination of the plane and the coefficient of friction between the inclined plane and the weight.

[***Ans.*** 30° and 0.1155]

9. A cord connects two bodies A and B of 450 N and 900 N weights. The two bodies are laced on an inclined plane and cord is parallel to inclined plane. The coefficient of friction for body A is 0.16 and that for B is 0.42. Determine the inclination of the plane to the horizontal and tension in the cord when motion is about to take place down the plane.

[***Ans.*** θ = 18.434° and T = 73.98 N]

10. Two rectangular blocks of weights W_1 and W_2 are connected by a flexible cord and rest upon a horizontal and inclined plane respectively with the cord passing as shown in Fig. 7.E10. Taking a particular case, where $W_1 = W_2$ and coefficient of friction μ is same for all contact surfaces, find the angle of inclination of the inclined plane at which motion of the system will impend.

[***Ans.*** $\alpha = 2 \tan^{-1} \mu$]

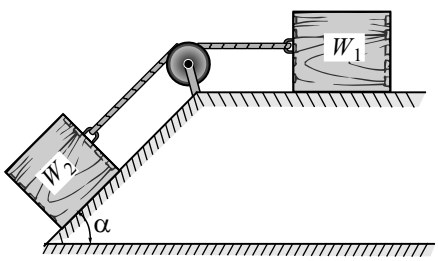

Fig. 7.E10

11. Two inclined planes AC and BC inclined at 60° and 30° to the horizontal meet at a ridge C shown in Fig. 7.E11. A mass of 100 kg rests on the inclined plane BC and is tied to a rope, which passes over a smooth pulley at the ridge, the other end of the rope, being connected to a block of W kg mass resting on the plane AC. Determine the least and greatest value of W for the equilibrium of the whole system.

[***Ans.*** $W_{min} = 243.88$ N and $W_{max} = 973.05$ N]

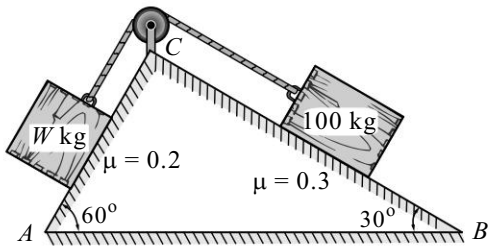

Fig. 7.E11

12. Find the tensions in the cords of the inclined plane system shown in Fig. 7.E12.

[***Ans.*** $T_1 = 165.36$ kN and $T_2 = 80.51$ kN]

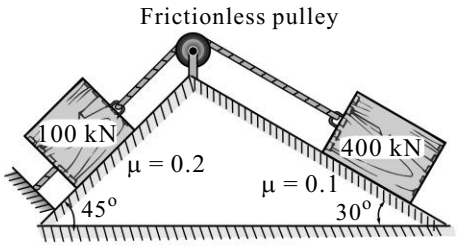

Fig. 7.E12

13. The 2.04 kg block A and the 3.06 kg block B are supported by an incline plane which is held in position shown in Fig. 7.E13. Knowing that the coefficient of friction is 0.15 between the two blocks and zero between block B and the incline, determine the value of θ for which motion is impending.

[***Ans.*** $\theta = 31^o$]

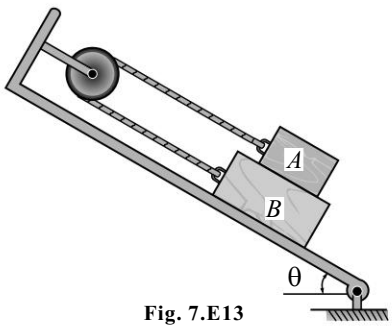

Fig. 7.E13

14. Find the least value of P that will just start the system of blocks shown in Fig. 7.E14 moving to the right. The coefficient of friction under each block is 0.30.

[***Ans.*** $P_{min} = 247.12$ N at $\alpha = 16.7^o$]

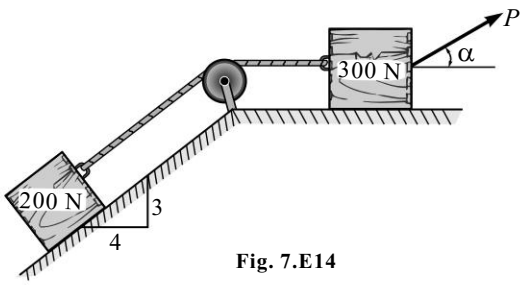

Fig. 7.E14

15. Find the weight W_B if the weight $W_A = 20$ kN is to be kept in equilibrium with pin connected rod AB in horizontal position. Find also maximum value of W_B for the same purpose. Find therefore the range of values of axial force in the rod AB. Refer to Fig. 7.E15.

[***Ans.*** $W_{B(min)} = 4.511$ kN,
$W_{B(max)} = 26.365$ kN, and
6.766 kN (C) to 17.577 kN (C)]

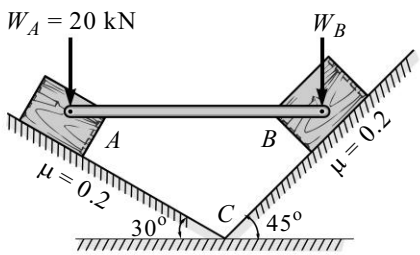

Fig. 7.E15

16. Two blocks A and B weighing 800 N and 1000 N respectively rest on two inclined planes each inclined at 30° to the horizontal. They are connected by a rope passing through a smooth pulley at the valley.

Ropes carrying loads W_1 and 5000 N (W_2) and passing over pulleys at the tops of the planes are also connected to the two blocks as shown in Fig. 7.E16. μ may be taken as 0.1 and 0.2 for blocks A and B respectively. Determine the least and greatest value of W_1 for the equilibrium of the whole system.

[***Ans.*** $W_{1(\min)} = 4657.52$ N and $W_{1(\max)} = 5142.48$ N]

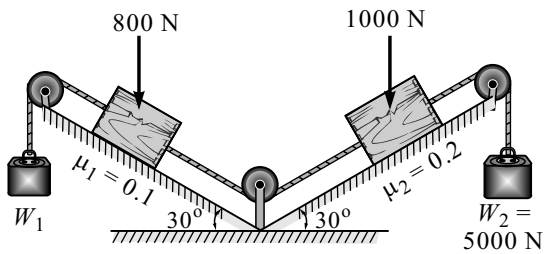

Fig. 7.E16

17. Two slender rods of negligible weight are pin-connected at A and attached to the 200 N block B and the 600 N block C as shown. The coefficient of static friction is 0.6 between all surfaces of contact. Determine the range of values of P for which equilibrium is maintained. Refer to Fig. 7.E17.

[***Ans.*** 1913.9 N to 3150 N]

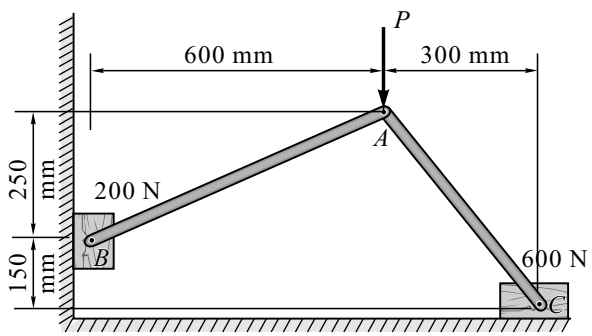

Fig. 7.E17

18. Determine the range of values of P for which equilibrium of the block shown in Fig. 7.E18 is maintained ($\mu_S = 0.25$, $\mu_K = 0.2$).

[***Ans.*** $143.03 \le P \le 483.46$ N]

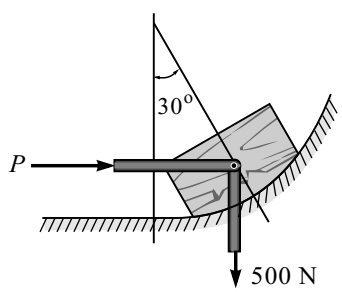

Fig. 7.E18

19. Block A has a mass of 20 kg and block B has a mass of 10 kg in Fig. 7.E19. Knowing that $\mu_s = 0.15$ between all surfaces of contact, determine the value of θ for which motion will impend. Take $g = 10$ m/s^2.

[***Ans.*** θ = 46.4°]

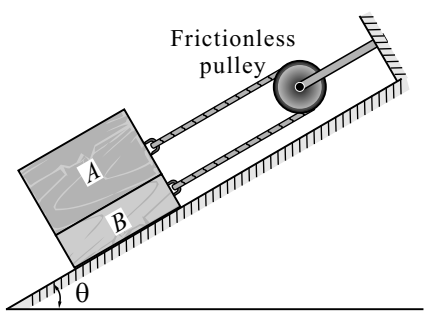

Fig. 7.E19

20. Find the least force P to start motion of any part of the system of three blocks resting upon one another as shown in Fig. 7.E20. The weights of the blocks are W_A = 300 N, W_B = 100 N and W_C = 200 N. The coefficient of friction between A and B is 0.3, between B and C is 0.2 and between C and the ground is 0.1.

[***Ans.*** 57.143 N]

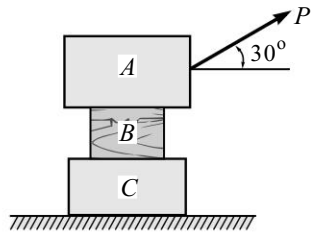

Fig. 7.E20

21. The three flat block are positioned on the 30° incline as shown in Fig. 7.E21, and a force P parallel to the incline is applied to the middle block. The upper block is prevented from moving by a wire which attaches it to the fixed support. The coefficient of static friction for each of the three pairs of surfaces is shown. Determine the maximum value which P may have before any slipping takes place. Take g = 10 m/s^2.

[***Ans.*** P = 95.58 N]

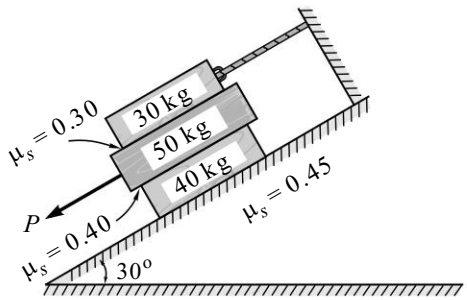

Fig. 7.E21

22. Two rectangular blocks of weights W_1 = 150 N and W_2 = 100 N, are connected by a string and rest on an inclined plane and on a horizontal surface as shown in Fig. 7.E22. The coefficient of friction for all contiguous surfaces is μ = 0.2. Find the magnitude and direction of the least force P at which the motion of the blocks will impend.

[***Ans.*** P = 161.7 N and θ = 11.31°]

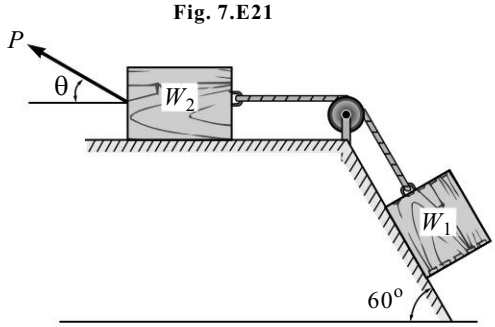

Fig. 7.E22

23. A 1500 N cupboard is to be shifted to the right by a horizontal force P as shown in Fig. 7.E23. Find the force P required to just cause the motion and the maximum height upto which it can be applied. Take μ = 0.25.

[***Ans.*** P = 375 N and h = 1.75 m]

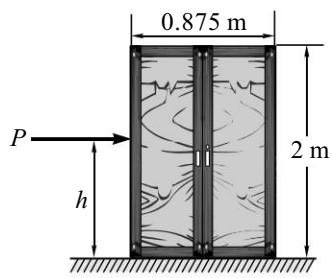

Fig. 7.E23

24. Two blocks A and B each weighing 1500 N are connected by a uniform horizontal bar which weighs 1000 N as shown in Fig. 7.E24. If the angle of limiting friction under each block is 15°, find the force P directed parallel to the 60° inclined plane that will cause motion impending to the right.

[***Ans.*** P = 1856.4 N]

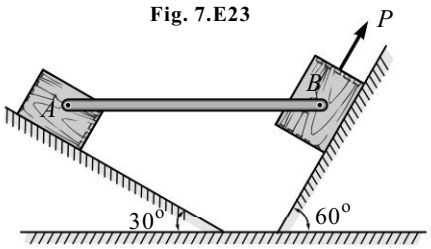

Fig. 7.E24

25. Refer to Fig. 7.E25, where a 8.15 kg block is attached to link *AB* and rests on a moving belt. Knowing that $\mu_s = 0.25$ and $\mu_k = 0.20$, determine the magnitude of the horizontal force *P* which should be applied to the belt to maintain its motion (a) to the right, and (b) to the left.

[***Ans.*** (a) $P = 18.08$ N (b) $P = 14.34$ N]

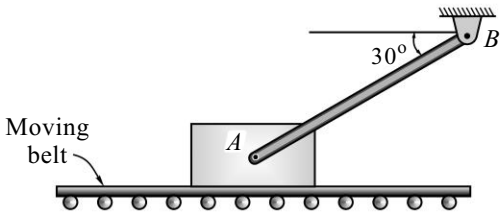

Fig. 7.E25

26. Block *A* has a mass of 20 kg and block *B* has a mass of 10 kg as shown in Fig. 7.E26. Coefficient of static friction between the blocks is 0.15 and between the block *B* with the slope is zero. Find the existing frictional force between the blocks. What is the force in the string ?

[***Ans.*** $T = 75$ N and $F = 25$ N]

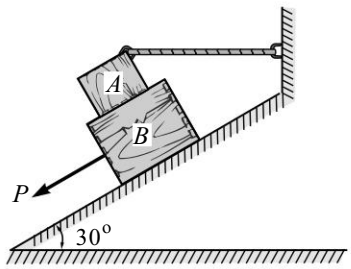

Fig. 7.E26

27. Refer to Fig. 7.E27, where a 45 kg disk rests on the surface for which the coefficient of static friction is $\mu = 0.2$, determine the largest couple moment *M* that can be applied to the bar without causing motion.

[***Ans.*** $M = 77.3$ N.m]

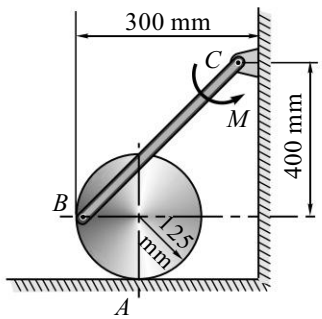

Fig. 7.E27

28. A uniform rod *AB* of 10 m length and 280 N weight is hinged at *B* and end *A* rests on a block weighing 400 N as shown in Fig. 7.E28. If $\mu = 0.4$ for all contact surfaces, find horizontal force *P* required to start moving 400 N block.

[***Ans.*** $P = 320$ N]

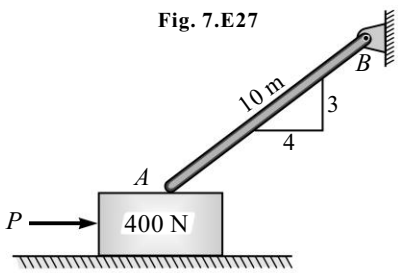

Fig. 7.E28

29. The beam *AB* has a negligible mass and thickness and is subjected to a triangular distributed loading. It is supported at one end by a pin and at the other end by a post having a mass of 50 kg and negligible thickness as shown in Fig. 7.E29. Determine the minimum force *P* needed to move the post. The coefficient of static friction at *B* and *C* are $\mu_B = 0.4$ and $\mu_C = 0.2$, respectively.

[***Ans.*** $P = 355$ N]

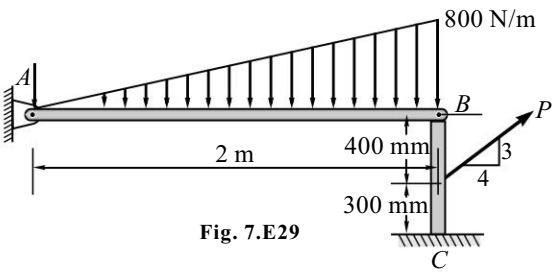

Fig. 7.E29

30. A 60 kg cupboard is to be shifted to the right, μ_s between cupboard and floor is 0.35 as shown in Fig. 7.E30. Determine

(a) the force P required to move the cupboard, and

(b) the largest allowable value of h if the cupboard is not to tip over.

[***Ans.*** P = 206 N and h = 714 mm]

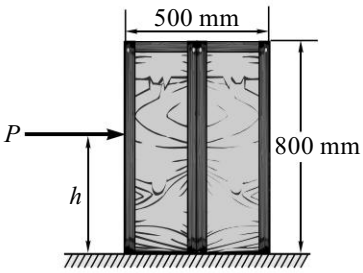

Fig. 7.E30

31. A cupboard of 750 N weight is placed over an inclined plane with μ = 0.20 as shown in Fig. 7.E31. Find the range of values of h where force P may be applied parallel to inclined plane to hold it in equilibrium.

[***Ans.*** 0.213 m and 2.014 m]

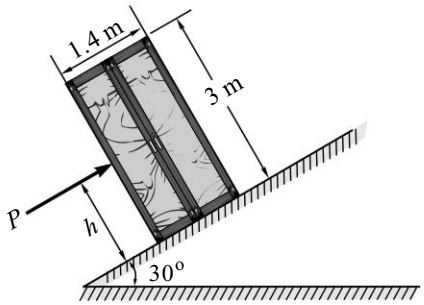

Fig. 7.E31

32. Referring to Fig. 7.E32, the coefficient of frictions are as follows : 0.25 at the floor, 0.3 at the wall and 0.2 between the blocks. Find the minimum values of a horizontal force P, applied to the lower block that will hold the system in equilibrium.

[***Ans.*** P = 81.02 N]

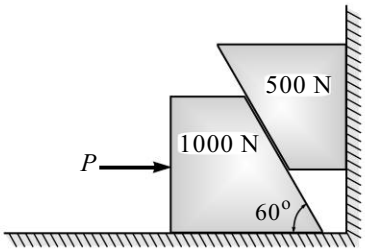

Fig. 7.E32

33. Block A weighs 25 kN and block B weighs 18 kN in Fig. 7.E33. μ for all surfaces is 0.11. For what range of values of P will the system be in equilibrium.

[***Ans.*** P_{min} = 45.8 kN and P_{max} = 124 kN]

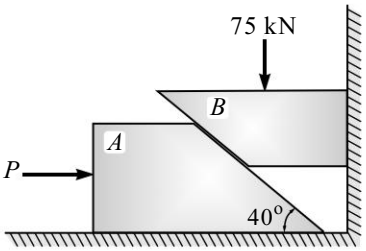

Fig. 7.E33

34. Refer to Fig. 7.E34 and draw the F.B.D. for different bodies and find the minimum value of force F to move the block A up the plane.

[***Ans.*** 134.6 N]

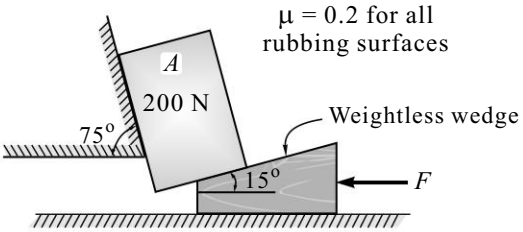

Fig. 7.E34

35. Determine the force P required to start the motion of wedge shown in Fig. 7.E35.
Take $\mu = 0.26$ for all surfaces.

[***Ans.*** $P = 1464.33$ N]

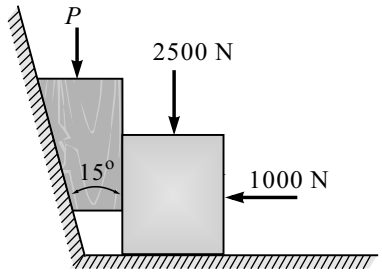

Fig. 7.E35

36. Calculate the force P required to initiate the motion of the 24 kg block up the 10° incline shown in Fig. 7.E36. The coefficient of static friction for each pair of surfaces is 0.3. Assume $g = 10$ m/s^2.

[***Ans.*** $P = 224.36$ N]

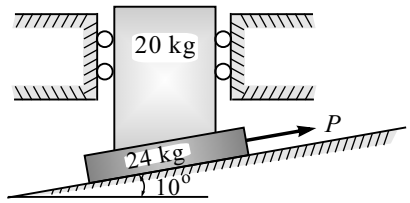

Fig. 7.E36

37. What horizontal force P on the wedge B and C is necessary to raise 200 kN resting on A shown in Fig. 7.E37? Assume μ between the wedges and the ground is 0.25 and between wedges and A is 0.2. Also assume symmetry.

[***Ans.*** $P = 55.665$ N]

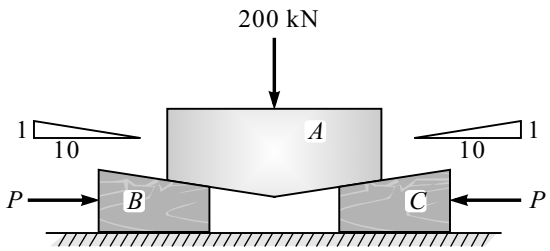

Fig. 7.E37

38. A horizontal force of 5 kN is acting on the wedge as shown in Fig. 7.E38. The coefficient of friction at all rubbing surfaces is 0.25. Find the load W which can be held in position. The weight of block B may be neglected.

[***Ans.*** $W = 22.89$ kN]

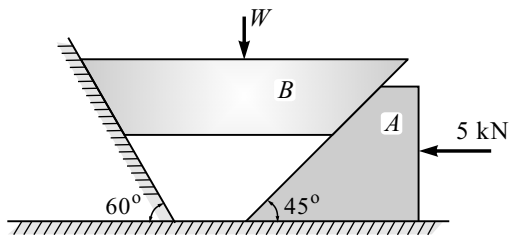

Fig. 7.E38

39. A 15° wedge of negligible weight is to driven to tighten a body B which is supporting a vertical load of 1000 N as shown in Fig. 7.E39. If the coefficient of friction for all contacting surfaces be 0.25, find the minimum force P required to drive the wedge.

[***Ans.*** $P = 232$ N]

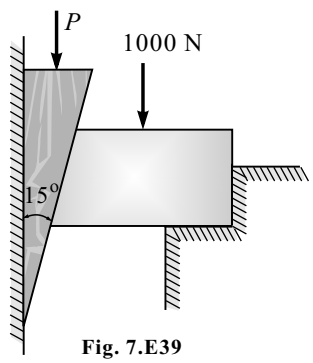

Fig. 7.E39

40. If beam AD is loaded as shown in Fig. 7.E40, determine the horizontal force P which must be applied to the wedge in order to remove it from under the beam. The coefficient of static friction at the wedge's top bottom surfaces are $\mu_{CA} = 0.25$ and $\mu_{CB} = 0.35$, respectively. If $P = 0$, is the wedge self-locking?

[***Ans.*** 5.53 kN, wedge is self-locking]

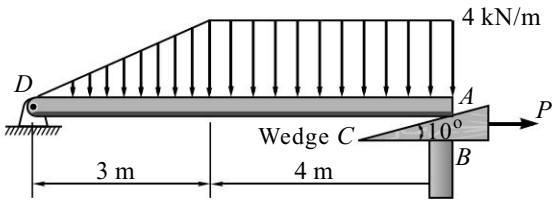

Fig. 7.E40

41. The wedge is used to level the member. For the loading shown in Fig. 7.E41, determine the horizontal force P that must be applied to move the wedge to the right. The coefficient of static friction between the wedge and its surfaces of contact is $\mu = 0.25$.

[***Ans.*** $P = 14.51$ kN]

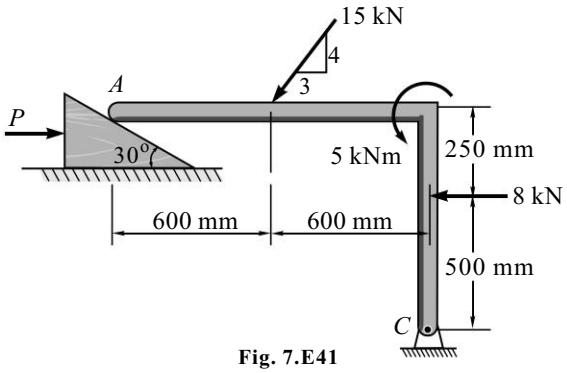

Fig. 7.E41

42. A uniform bar has a mass of 35 kg shown in Fig. 7.E42. What rightward force P is needed to start the bar moving to the right ? $\mu = 0.3$.

[***Ans.*** $P = 246.8$ N]

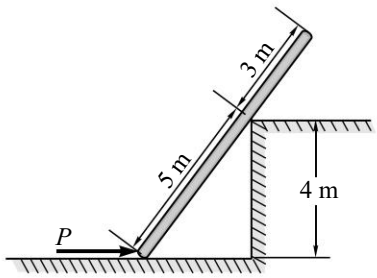

Fig. 7.E42

43. A person of weight W ascends the 5 m ladder shown in Fig. 7.E43. How far up the ladder may the person climb before the sliding motion of the ladder takes place?

[***Ans.*** $x = 1.258$ m]

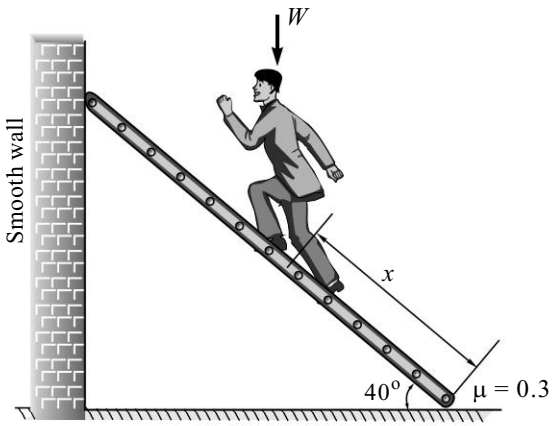

Fig. 7.E43

44. A ladder of 4 m length weighing 200 N is placed against a vertical wall as shown in Fig. 7.E44. The coefficient of friction between the wall and the ladder is 0.2 and that between the ladder and the floor is 0.3. The ladder in addition to its own weight has to support a man weighing 600 N at a distance of 3 m from A. Calculate the minimum horizontal force to be applied at A to prevent slipping.

[***Ans.*** $P = 61.76$ N]

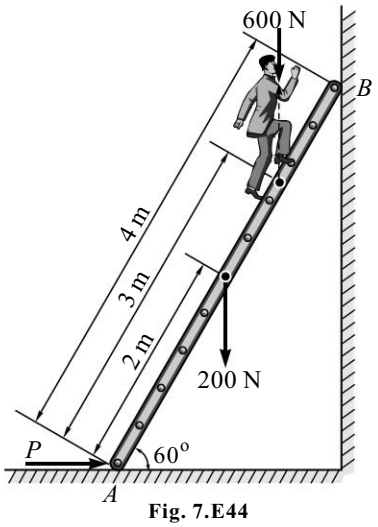

Fig. 7.E44

45. The ladder shown in Fig. 7.E45 is 6 m long and is supported by a horizontal floor and vertical wall. The coefficient of friction between the floor and the ladder is 0.4 and between wall and ladder is 0.25. The weight of ladder is 200 N and may be considered a concentrated at G. The ladder also supports a vertical load of 900 N at C, which is at distance of 1 m from B. Determine the least value of α at which the ladder may be placed without slipping. Determine the reaction at that stage.

[***Ans.*** $N_A = 1000$ N, $F_A = 400$ N,
$N_B = 400$ N, $F_B = 100$ N, and
$\alpha = 61.927^\circ$]

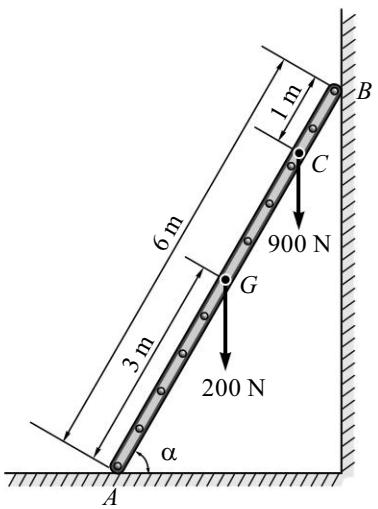

Fig. 7.E45

46. A 1 m long horizontal bar and of negligible weight rests on rough inclined planes as shown in Fig. 7.E46. If the angle of friction is 15°, determine the minimum value of x at which the load $Q = 200$ N may be applied before slipping occurs.

[***Ans.*** $x = 0.35$ m]

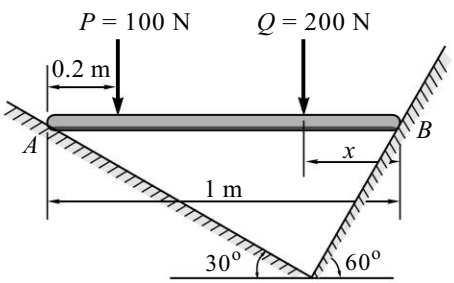

Fig. 7.E46

[II] Review Questions

1. What is meant by frictional force?

2. State the laws of friction.

3. Describe the following terms:

(a) Limiting friction (b) Static friction (c) Dynamic friction
(d) Coefficient of friction (e) Angle of friction (f) Angle of repose
(g) Cone of friction

4. Why is the coefficient of static friction greater than the coefficient of kinetic friction?

5. Discuss the merits and demerits of friction.

6. What is the use of wedge?

[III] Fill in the Blanks

1. A wedge is generally used to lift a heavy load by a _____ distance.

2. The inverted cone with semicentral angle equal to the limiting frictional angle ϕ is called the _____ .

3. The minimum angle of inclination of a plane with horizontal at which the body is about to slide on its own is called the _____.

[IV] Multiple-choice Questions

Select the appropriate answer from the given options.

1. The cause of friction between two surfaces is _____.

(a) material **(b)** roughness **(c)** material and roughness **(d)** none of these

2. Limiting frictional force is directly proportional to _____.

(a) weight **(b)** mass **(c)** area **(d)** normal reaction

3. Frictional force is independent of the _____.

(a) only area **(b)** only speed **(c)** area and speed **(d)** none of these

4. Coefficient of static friction is always _____ than the coefficient of kinetic friction.

(a) greater **(b)** less **(c)** equal **(d)** zero

5. Angle of repose is _____ to angle of friction.

(a) less **(b)** equal **(c)** greater **(d)** zero

6. Angle made by the resultant of the limiting frictional force and the normal reaction with normal reaction is called the _____.

(a) angle of friction **(b)** angle of repose
(c) angle of inclination **(d)** angle of limiting friction

7. If the inclination of the plane with horizontal is less than angle of friction then the block kept on the incline will _____ .

(a) move downward **(b)** move upward **(c)** be in equilibrium **(d)** be in motion

CHAPTER

8

PRINCIPLE OF VIRTUAL WORK

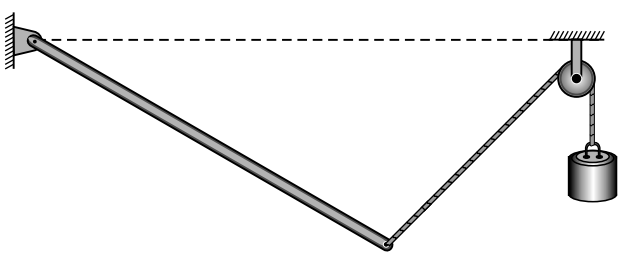

Learning Objectives

After reading this chapter, you will be able to answer the following questions :

- *What is the concept of virtual work ?*
- *How to analyse virtual displacement of structure ?*
- *How to analyse positive and negative work done ?*

8.1 INTRODUCTION

In the previous chapter, we analysed the equilibrium condition of rigid bodies and by drawing their F.B.D., solution was obtained for unknown force.

If the system of rigid bodies exists i.e., few members are connected to each other, in such case F.B.D. of individual bodies are considered and it is analysed by equilibrium condition,

i.e., $\Sigma F_x = 0$; $\Sigma F_y = 0$ and $\Sigma M = 0$.

This is the conventional method which is very time consuming and lengthy. We have an alternative method given by the name *Principle of Virtual Work* to solve equilibrium problems. This method is very effective and has certain advantages, especially for connected rigid bodies. Without dismembering of the rigid bodies, the required unknown is obtained directly.

8.2 WORK DONE BY FORCE

We know work is the product of force and displacement. Consider a constant force F acting on the body which moves along the plane from position ① to position ②. By definition, the work (U) done by force F on the body during this displacement is the product of component of force ($F \cos \theta$) and the displacement S.

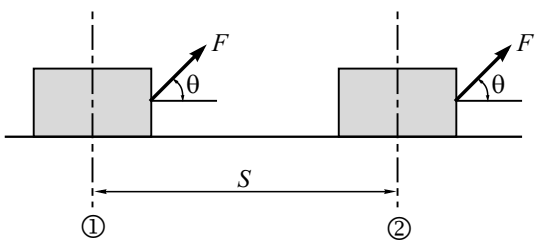

Fig. 8.2-i

Work done (U) = $F \cos \theta \times S$

Note :

- If the direction of force component and displacement is same then the work done is positive.
- If the direction of force component and displacement is opposite then the work done is negative.
- If the direction of force is perpendicular to direction of displacement then the work done is zero

Work done by applied force P is positive

$U = P \times S$

Work done by frictional force F is negative

$U = F \times S$

Work done by self-weight W and normal reaction N is zero.

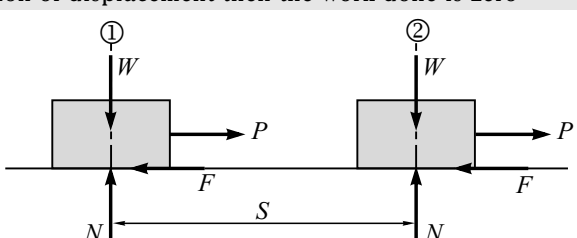

Fig. 8.2-ii

8.2.1 Work Done by Couple

Consider a rigid body which is hinged at O. The couple M is applied and it rotates the body by θ radians from position ① to position ②.

The work done by couple is given by product of magnitude of couple (M) and angular displacement (θ).

$U = M \times \theta$

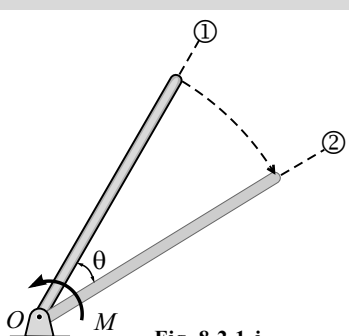

Fig. 8.2.1-i

(i) If the direction of couple and angular displacement is same then the work done is positive.

(ii) If the direction of couple and angular displacement is opposite then the work done is negative.

(iii) If the angular displacement is zero then the work done by couple is also zero.

8.2.2 Unit of Work

Work is a scalar quantity. In SI system, the unit of work is Joule (J).

1 Joule = 1 N-m

One Joule : Work done by a force of one Newton causing a displacement of one metre in the direction of the force.

8.3 VIRTUAL WORK

We know that the system of rigid body in equilibrium is stable and there is no linear or angular displacement developed by forces and couple acting on it. Therefore, net resultant is zero. If the system of rigid body in equilibrium is assumed to be given a small virtual (imaginary) displacement then the total virtual work done by the forces and couples should also be zero.

Principle of Virtual Work

If the system of a rigid body in equilibrium is given a small virtual (imaginary) displacement, consistent with geometrical conditions then the total virtual work done by force and couple acting on system is equal to zero.

Application of virtual work to link mechanism systems, with a single degree of freedom.

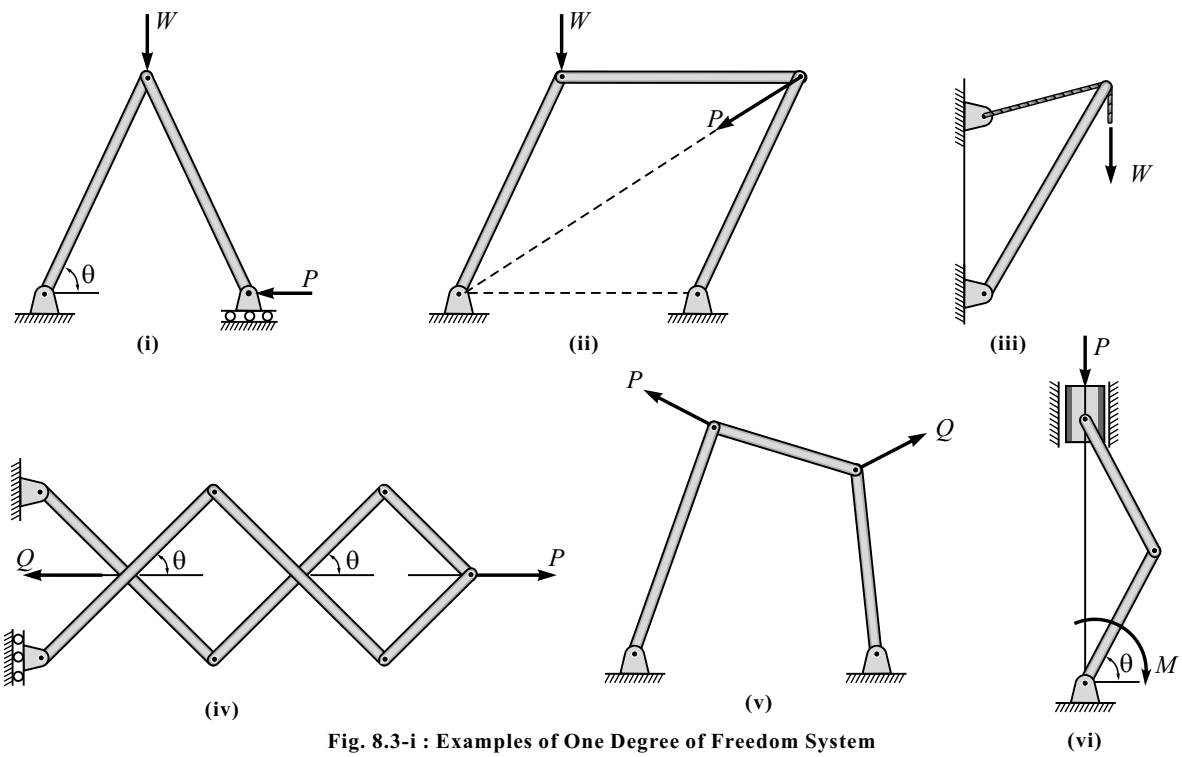

Fig. 8.3-i : Examples of One Degree of Freedom System

Link mechanism means system of rigid bodies in equilibrium are interconnected by pins. Our discussion will be limited to such link mechanism which have one degree of freedom.

Degree of Freedom : The *number of independent coordinates* needed to completely specify the configuration of a mechanical system is referred to as the number of degree of freedom for that system.

The example of one degree of freedom system is illustrated where only one coordinate is needed to determine the position of every part of the system. The coordinate can be distance or an angle.

The example of two degree of freedom system is illustrated.

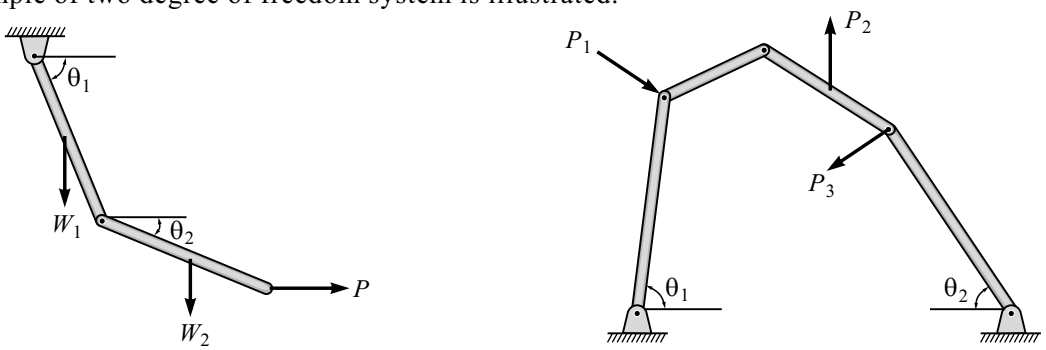

Fig. 8.3-ii : Examples of Two Degree of Freedom System

Note : As per our syllabus, we shall restrict application to one degree of freedom system.

Procedure to Solve a Problem by Coordinate Method

1. Draw the F.B.D. of the system of mechanism.
2. Select the origin, such a point, which is stationary when the virtual displacement is given to the system. Draw X and Y axis w.r.t. origin.
3. Introduce a variable angle θ which is the geometrical condition of the equilibrium configuration.
4. Give a small virtual displacement to the system such that there is an increase or decrease in value of θ by a small amount $\delta\theta$.
5. Observe the active forces in the system which are responsible to do virtual work and find their coordinates in terms of variable θ w.r.t. selected origin.
6. To get virtual displacement, differentiate the coordinate w.r.t. θ. This small incremental virtual displacement value should always be considered as + ve, i.e., $|\pm \delta x| / |\pm \delta y|$.
7. If the active forces are in the direction of virtual displacement then consider such virtual work to be positive, otherwise negative.
8. If a couple is involved in the system then the couple which acts in the direction of angle θ is considered as positive virtual work, otherwise negative.
9. Apply principle of virtual work which says total virtual work done is zero, i.e., $\Sigma U = 0$.
10. Eliminate the common term $\delta\theta$ from the equation, put the value of θ and get the required answer.

SOLVED PROBLEMS

Problem 1

Determine the tension in a cable BC shown in Fig. 8.1, by virtual work method.

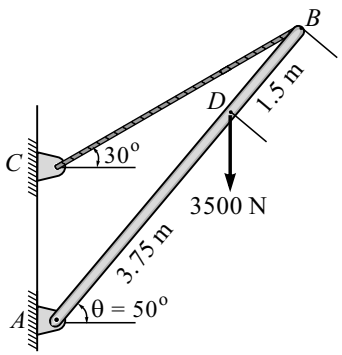

Fig. 8.1

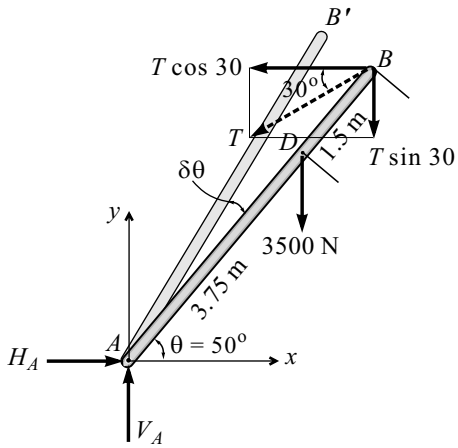

Fig. 8.1(a) : F.B.D. of Rod *AB*

Solution

Method I

Using coordinate method, select A as the origin.

Assume a small virtual angular displacement in anticlockwise direction about a point A given to the rod AB such that θ increases by δθ.

Refer to Fig. 8.1(a).

Point	Coordinate	Virtual Displacement (Direction)	Force (Direction)	Work Done
D	$y_D = 3.75 \sin\theta$	$\delta y_D = \lvert 3.75 \cos\theta\, \delta\theta \rvert \quad (\uparrow)$	3500 N $\quad (\downarrow)$	– ve
B	$y_B = 5.25 \sin\theta$	$\delta y_B = \lvert 5.25 \cos\theta\, \delta\theta \rvert \quad (\uparrow)$	$T \sin 30^\circ \quad (\downarrow)$	– ve
B	$x_B = 5.25 \cos\theta$	$\delta x_B = \lvert -5.25 \sin\theta\, \delta\theta \rvert \quad (\leftarrow)$	$T \cos 30^\circ \quad (\leftarrow)$	+ ve

By virtual work principle, we have

Total virtual work done = Zero

$$-3500 \times \delta y_D - T \sin 30^\circ \times \delta y_B + T \cos 30^\circ \times \delta x_B = 0$$

$$-3500 \times 3.75 \cos\theta\, \delta\theta - T \sin 30^\circ \times 5.25 \cos\theta\, \delta\theta + T \cos 30^\circ \times 5.25 \sin\theta\, \delta\theta = 0$$

Put $\theta = 50^\circ$ and cancel out δθ

$\therefore\ T = 4698.46$ N

Method II

Using coordinate method, select A as the origin.

Assume a small virtual angular displacement in clockwise direction about a point A given to the rod AB such that θ decreases by $\delta\theta$.

Refer to Fig. 8.1(b).

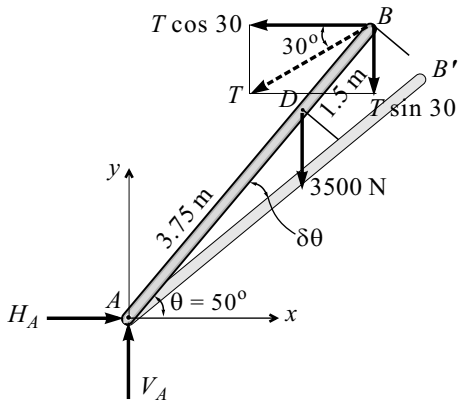

Fig. 8.1(b) : F.B.D. of Rod *AB*

Point	Coordinate	Virtual Displacement (Direction)	Force (Direction)	Work Done
D	$y_D = 3.75 \sin\theta$	$\delta y_D = \lvert 3.75 \cos\theta\, \delta\theta \rvert \quad (\downarrow)$	3500 N $\quad (\downarrow)$	+ ve
B	$y_B = 5.25 \sin\theta$	$\delta y_B = \lvert 5.25 \cos\theta\, \delta\theta \rvert \quad (\downarrow)$	$T \sin 30^\circ \quad (\downarrow)$	+ ve
B	$x_B = 5.25 \cos\theta$	$\delta x_B = \lvert -5.25 \sin\theta\, \delta\theta \rvert \quad (\rightarrow)$	$T \cos 30^\circ \quad (\leftarrow)$	− ve

By virtual work principle, we have

Total virtual work done = Zero

$$3500 \times \delta y_D + T \sin 30^\circ \times \delta y_B - T \cos 30^\circ \times \delta x_B = 0$$

$$3500 \times 3.75 \cos\theta\, \delta\theta + T \sin 30^\circ \times 5.25 \cos\theta\, \delta\theta - T \cos 30^\circ \times 5.25 \sin\theta\, \delta\theta = 0$$

Put $\theta = 50^\circ$ and cancel out $\delta\theta$

$\therefore\ T = 4698.46$ N

Problem 2

A rod AB having self-weight 3 kN is hinged at A. A 5 kN force is applied at B at right angled to the rod AB as shown in Fig. 8.2. Find the tension in the horizontal string tied at D.

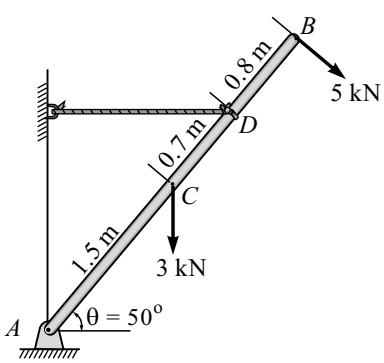

Fig. 8.2

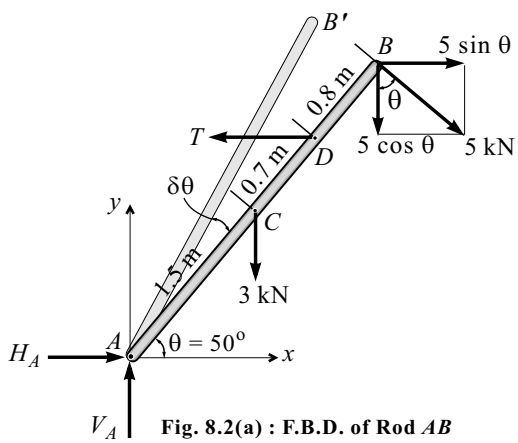

Fig. 8.2(a) : F.B.D. of Rod *AB*

Solution

Method I

Using coordinate method, select A as the origin.

Assume a small virtual angular displacement in anticlockwise direction about a point A given to the rod AB such that θ increases by $\delta\theta$. Refer to Fig. 8.2(a).

Point	Coordinate	Virtual Displacement (Direction)	Force (Direction)	Work Done
C	$y_C = 1.5 \sin\theta$	$\delta y_C = \lvert 1.5 \cos\theta\, \delta\theta \rvert$ (↑)	3 kN (↓)	– ve
D	$x_D = 2.2 \cos\theta$	$\delta x_D = \lvert -2.2 \sin\theta\, \delta\theta \rvert$ (←)	T (←)	+ ve
B	$x_B = 3 \cos\theta$	$\delta x_B = \lvert -3 \sin\theta\, \delta\theta \rvert$ (←)	5 sin θ (→)	– ve
B	$y_B = 3 \sin\theta$	$\delta y_B = \lvert 3 \cos\theta\, \delta\theta \rvert$ (↑)	5 cos θ (↓)	– ve

By virtual work principle, we have

Total virtual work done = Zero

$$-3 \times \delta y_C + T \times \delta x_D - 5 \cos\theta \times \delta y_B - 5 \sin\theta \times \delta x_B = 0$$

$$-3 \times 1.5 \cos\theta\, \delta\theta + T \times 2.2 \sin\theta\, \delta\theta - 5 \cos\theta \times 3 \cos\theta\, \delta\theta - 5 \sin\theta \times 3 \sin\theta\, \delta\theta = 0$$

Put $\theta = 50^\circ$ and cancel out $\delta\theta$

$$T = 10.62 \text{ kN}$$

Method II

Using coordinate method, select A as the origin.

Assume a small virtual angular displacement in clockwise direction about a point A given to the rod AB such that θ decreases by $\delta\theta$.

Refer to Fig. 8.2(b).

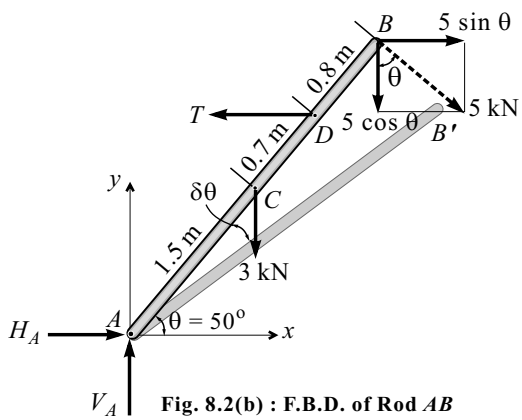

Fig. 8.2(b) : F.B.D. of Rod *AB*

Point	Coordinate	Virtual Displacement (Direction)	Force (Direction)	Work Done
C	$y_C = 1.5 \sin\theta$	$\delta y_C = \lvert 1.5 \cos\theta\, \delta\theta \rvert$ (↓)	3 kN (↓)	+ ve
D	$x_D = 2.2 \cos\theta$	$\delta x_D = \lvert -2.2 \sin\theta\, \delta\theta \rvert$ (→)	T (←)	– ve
B	$x_B = 3 \cos\theta$	$\delta x_B = \lvert -3 \sin\theta\, \delta\theta \rvert$ (→)	5 sin θ (→)	+ ve
B	$y_B = 3 \sin\theta$	$\delta y_B = \lvert 3 \cos\theta\, \delta\theta \rvert$ (↓)	5 cos θ (↓)	+ ve

By virtual work principle, we have

$$3 \times \delta y_C - T \times \delta x_D + 5 \cos\theta \times \delta y_B + 5 \sin\theta \times \delta x_B = 0$$

$$3 \times 1.5 \cos\theta\, \delta\theta - T \times 2.2 \sin\theta\, \delta\theta + 5 \cos\theta \times 3 \cos\theta\, \delta\theta + 5 \sin\theta \times 3 \sin\theta\, \delta\theta = 0$$

Put $\theta = 50^\circ$ and cancel out $\delta\theta$

$$T = 10.62 \text{ kN}$$

Problem 3

Using the principle of virtual work, determine the value of mass M of the body for equilibrium AB = 2 m and BC = 1 m. Refer to Fig. 8.3.

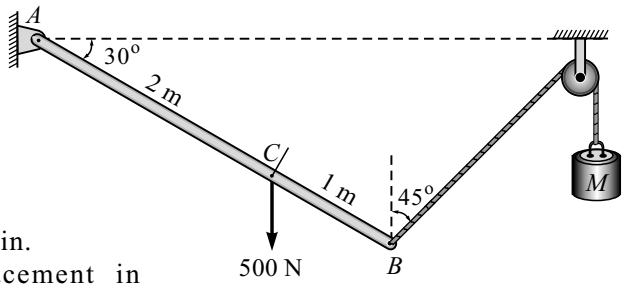

Fig. 8.3

Solution

Method I

Using coordinate method, select A as the origin.

Assume a small virtual angular displacement in anticlockwise direction about a point A given to the rod AB such that θ increases by δθ. Refer to Fig. 8.3(a).

Point	Coordinate	Virtual Displacement (Direction)	Force (Direction)	Work Done
C	$y_C = 2 \sin\theta$	$\delta y_C = \lvert 2\cos\theta\,\delta\theta \rvert$ (↑)	500 N (↓)	– ve
B	$y_B = 3 \sin\theta$	$\delta y_B = \lvert 3\cos\theta\,\delta\theta \rvert$ (↑)	$T \sin 45^\circ$ (↑)	+ ve
B	$x_B = 3 \cos\theta$	$\delta x_B = \lvert -3\sin\theta\,\delta\theta \rvert$ (→)	$T \cos 45^\circ$ (→)	+ ve

By virtual work principle, we have

Total virtual work done = Zero

$-500 \times \delta y_C + T\cos 45^\circ \times \delta x_B + T \sin 45^\circ \times \delta y_B = 0$

$-500 \times 2\cos\theta\,\delta\theta + T\cos 45^\circ \times 3\sin\theta\,\delta\theta + T\sin 45^\circ \times 3\cos\theta\,\delta\theta = 0$

Put $\theta = 30^\circ$ and cancel out δθ

$T = 298.86$ N

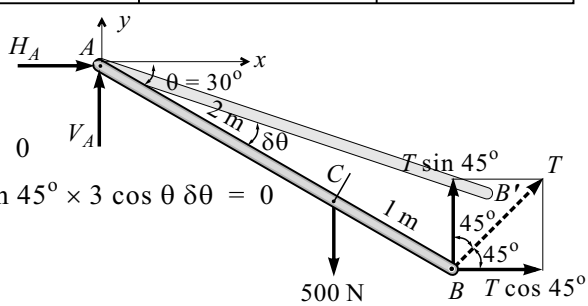

Fig. 8.3(a) : F.B.D. of Rod *AB*

Method II

Using coordinate method, select A as the origin.

Point	Coordinate	Virtual Displacement (Direction)	Force (Direction)	Work Done
C	$y_C = 2 \sin\theta$	$\delta y_C = \lvert 2\cos\theta\,\delta\theta \rvert$ (↓)	500 N (↓)	+ ve
B	$y_B = 3 \sin\theta$	$\delta y_B = \lvert 3\cos\theta\,\delta\theta \rvert$ (↓)	$T \sin 45$ (↑)	– ve
B	$x_B = 3 \cos\theta$	$\delta x_B = \lvert -3\sin\theta\,\delta\theta \rvert$ (←)	$T \cos 45$ (→)	– ve

Assume a small virtual angular displacement in clockwise direction about a point A given to the rod AB such that θ decreases by δθ.

Refer to Fig. 8.3(b).

By virtual work principle, we have

Total virtual work done = Zero

$500 \times \delta y_C - T\cos 45^\circ \times \delta x_B - T\sin 45^\circ \times \delta y_B = 0$

$500 \times 2\cos\theta\,\delta\theta - T\cos 45^\circ \times 3\sin\theta\,\delta\theta - T\sin 45^\circ \times 3\cos\theta\,\delta\theta = 0$

Put $\theta = 30^\circ$ and cancel out δθ

$\therefore\ T = 298.86$ N

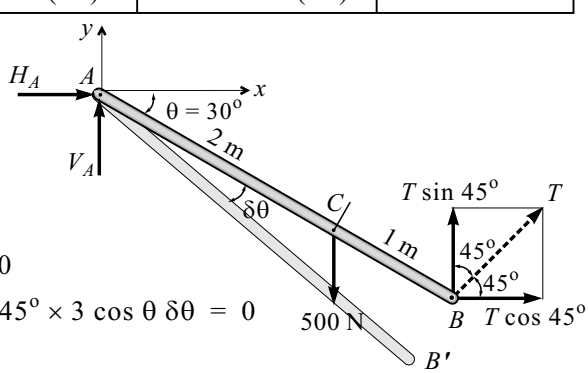

Fig. 8.3(b) : F.B.D. of Rod *AB*

Problem 4

A man raises a 10 kg joist of length 4 m by pulling on a rope as shown in Fig. 8.4. Find the tension in the rope using principle of virtual work.

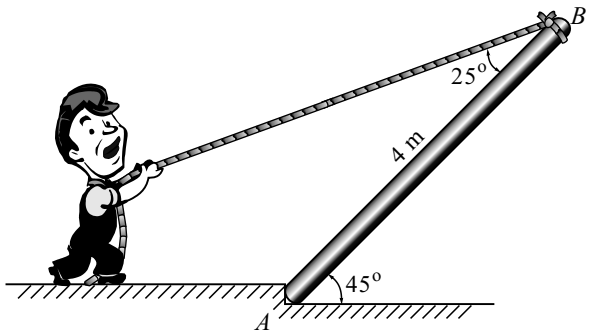

Fig. 8.4

Solution

Method I

Using coordinate method, select A as the origin.

Assume a small virtual angular displacement in anticlockwise direction about a point A given to the joist AB such that θ increases by $\delta\theta$. Refer to Fig. 8.4(a).

Point	Coordinate	Virtual Displacement (Direction)	Force (Direction)	Work Done
C	$y_C = 2 \sin\theta$	$\delta y_C = \lvert 2 \cos\theta\, \delta\theta \rvert \quad (\uparrow)$	$10 \times 9.81\ (\downarrow)$	– ve
B	$y_B = 4 \sin\theta$	$\delta y_B = \lvert 4 \cos\theta\, \delta\theta \rvert \quad (\uparrow)$	$T \sin 20^\circ\ (\downarrow)$	– ve
B	$x_B = 4 \cos\theta$	$\delta x_B = \lvert -4 \sin\theta\, \delta\theta \rvert \quad (\leftarrow)$	$T \cos 20^\circ\ (\leftarrow)$	+ ve

By virtual work principle, we have

Total virtual work done = Zero

$$-10 \times 9.81 \times \delta y_C - T \sin 20^\circ \times \delta x_B + T \cos 20^\circ \times \delta x_B = 0$$

$$-10 \times 9.81 \times 2 \cos\theta\, \delta\theta - T \sin 20^\circ \times 4 \cos\theta\, \delta\theta + T \cos 20^\circ \times 4 \sin\theta\, \delta\theta = 0$$

$$T\,(4 \cos 20 \sin 45^\circ - 4 \sin 20 \cos 45^\circ) = 10 \times 9.81 \times 2 \cos 45^\circ$$

$$\therefore\ T = 82.07 \text{ N}$$

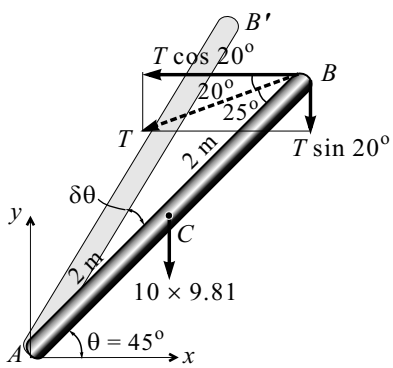

Fig. 8.4(a) : F.B.D. of Joist AB

Problem 5

Use method of virtual work to determine the tension in the cable in terms of θ for the arrangement shown in Fig. 8.5.

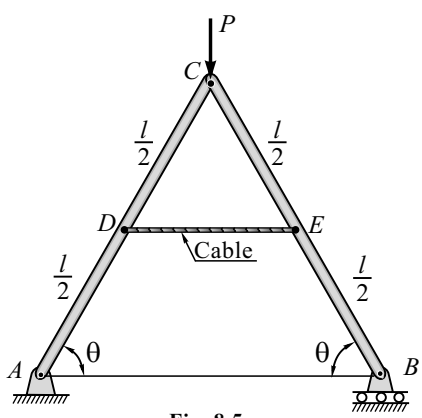

Fig. 8.5

Solution

Using coordinate method, select A as the origin.

Assume a small virtual angular displacement in anticlockwise direction about point A given to the mechanism such that θ increases by δθ. Refer to Fig. 8.5(a).

Point	Coordinate	Virtual Displacement (Direction)	Force (Direction)	Work Done
D	$x_D = \frac{l}{2}\cos\theta$	$\delta x_D = \lvert -\frac{l}{2}\sin\theta\,\delta\theta \rvert$ (←)	T (→)	– ve
E	$x_E = \frac{3}{2}l\cos\theta$	$\delta x_E = \lvert -1.5l\sin\theta\,\delta\theta \rvert$ (←)	T (←)	+ ve
C	$y_C = l\sin\theta$	$\delta y_C = \lvert l\cos\theta\,\delta\theta \rvert$ (↑)	P (↓)	– ve

By virtual work principle, we have

Total virtual work done = Zero

$$-T \times \delta x_D + T \times \delta x_E - P \times \delta y_C = 0$$

$$-T\,\frac{l}{2}\sin\theta\,\delta\theta + T \times 1.5l\sin\theta\,\delta\theta - P \times l\cos\theta\,\delta\theta = 0$$

$$T\sin\theta = P\cos\theta$$

$$\therefore\ T = P\cot\theta$$

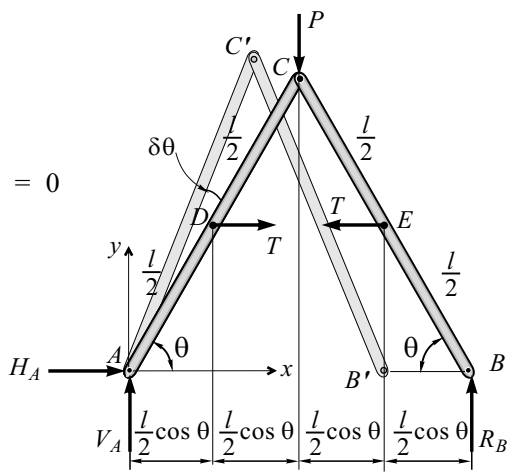

Fig. 8.5(a) : F.B.D.

Problem 6

For the hinged frame as shown in Fig. 8.6, the three squares are identical. Prove that for equilibrium $Q = 3P$. P and Q are horizontal forces acting at D and B respectively.

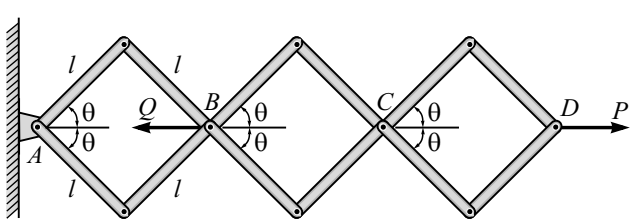

Fig. 8.6

Solution

Using coordinate method, select A as the origin.

Assume a small virtual angular displacement in anticlockwise direction about point A given to the mechanism such that θ increases by δθ. Refer to Fig. 8.6(a).

Point	Coordinate	Virtual Displacement (Direction)	Force (Direction)	Work Done
B	$x_B = 2l\cos\theta$	$\delta x_B = \lvert -2l\sin\theta\,\delta\theta \rvert$ (←)	Q (←)	+ ve
D	$x_D = 6l\cos\theta$	$\delta x_D = \lvert -6l\sin\theta\,\delta\theta \rvert$ (←)	P (→)	– ve

By virtual work principle, we have

Total virtual work done = Zero

$Q \times \delta x_B - P \times \delta x_D = 0$

$Q \times 2l \sin\theta\, \delta\theta - P \times 6l \sin\theta\, \delta\theta = 0$

$2Q = 6P$

$\therefore Q = 3P$

Hence proved.

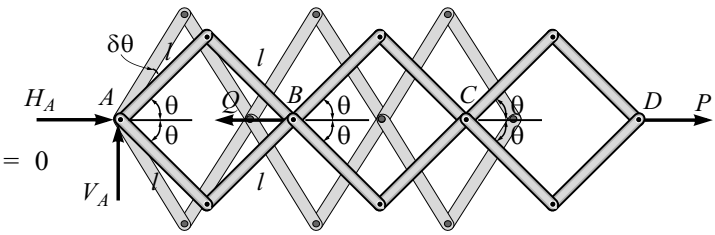

Fig. 9.6(a) : F.B.D.

Problem 7

A frame *ABC* carries loads as shown in Fig. 9.7. Determine tension induced in the tie rod *AB*.

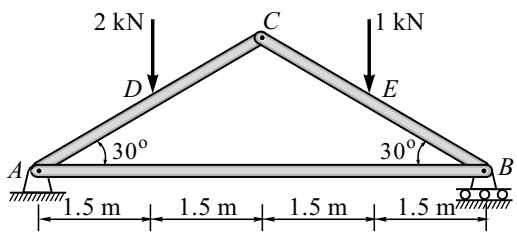

Fig. 8.7

Solution

Using coordinate method, select *A* as the origin.

Assume a small virtual angular displacement in anticlockwise direction about point *A* given to the mechanism such that θ increases by δθ. Refer to Fig. 8.7(a).

Point	Coordinate	Virtual Displacement (Direction)	Force (Direction)	Work Done
D	$y_D = 1.732 \sin\theta$	$\delta y_D = \lvert 1.732 \cos\theta\, \delta\theta \rvert$ (↑)	2 kN (↓)	– ve
E	$y_E = 1.732 \sin\theta$	$\delta y_E = \lvert 1.732 \cos\theta\, \delta\theta \rvert$ (↑)	1 kN (↓)	– ve
B	$x_B = 6.93 \cos\theta$	$\delta x_B = \lvert -6.93 \sin\theta\, \delta\theta \rvert$ (←)	*T* (←)	+ ve

By virtual work principle, we have

Total virtual work done = Zero

$-2 \times \delta y_D - 1 \times \delta y_E + T \times \delta x_B = 0$

$-2 \times 1.732 \cos\theta\, \delta\theta - 1 \times 1.732 \cos\theta\, \delta\theta$
$+ T \times 6.93 \sin\theta\, \delta\theta = 0$

Put $\theta = 30^\circ$ and cancel out $\delta\theta$

$\therefore T = 1.3$ kN

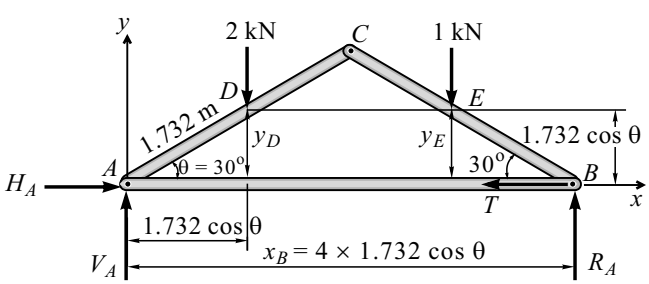

Fig. 8.7(a) : F.B.D.

Problem 8

A bar length *l* and weight *W* rests against smooth surface as shown in Fig. 8.8. Calculate the horizontal force *P* necessary to prevent the bar from sliding to the right by using the principle of virtual work.

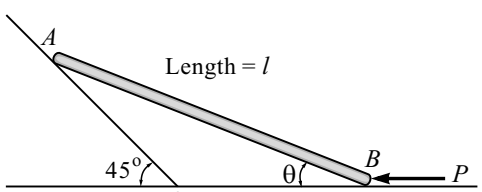

Fig. 8.8

Solution

Using coordinate method, select *O* as the origin.

Assume a small virtual angular displacement in anticlockwise direction about point O given to the rod AB such that θ increases by $\delta\theta$. Refer to Fig. 8.8(a).

Point	Coordinate	Virtual Displacement (Direction)	Force (Direction)	Work Done
C	$y_C = \frac{l}{2}\sin\theta$	$\delta y_C = \lvert \frac{l}{2}\cos\theta\,\delta\theta \rvert$ (↑)	W (↓)	– ve
B	$x_B = l(\cos\theta - \sin\theta)$	$\delta x_B = \lvert -l(\sin\theta + \cos\theta)\,\delta\theta \rvert$ (←)	P (←)	+ ve

By virtual work principle, we have

Total virtual work done = Zero

$$-W \times \delta y_C + P \times \delta x_B = 0$$

$$-W \times \frac{l}{2}\cos\theta\,\delta\theta + P\,l\,(\sin\theta + \cos\theta)\,\delta\theta = 0$$

$$\therefore P = \frac{W\cos\theta}{2(\sin\theta + \cos\theta)}$$

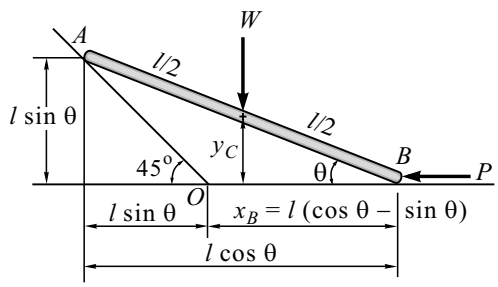

Fig. 9.8(a) : F.B.D.

Problem 9

The pin connected mechanism is constrained at A by a pin and at B by a smooth sliding block as shown in Fig. 9.9. If P = 2 kN, determine the angle θ for equilibrium.

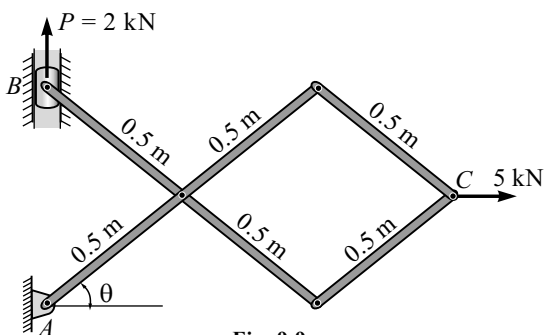

Fig. 9.9

Solution

Using coordinate method, select fixed point A as the origin.

Give a small virtual displacement such that θ increases by $\delta\theta$. Refer to Fig. 9.9(a).

Point	Coordinate	Virtual Displacement (Direction)	Force (Direction)	Work Done
B	$y_B = 2 \times 0.5\cos\theta$	$\delta y_B = \lvert -\sin\theta\,\delta\theta \rvert$ (↑)	$P = 2$ kN (↑)	+ ve
C	$x_C = 3 \times 0.5\sin\theta$	$\delta x_C = \lvert 1.5\cos\theta\,\delta\theta \rvert$ (←)	5 kN (→)	– ve

By virtual work principle, we have

Total virtual work done = Zero

$$2 \times \delta y_B - 5 \times \delta x_C = 0$$

$$2 \times \sin\theta\,\delta\theta - 5 \times 1.5\cos\theta\,\delta\theta = 0$$

$$2\sin\theta = 7.5\cos\theta$$

$$\tan\theta = 3.75$$

$$\therefore \theta = 75.07^\circ$$

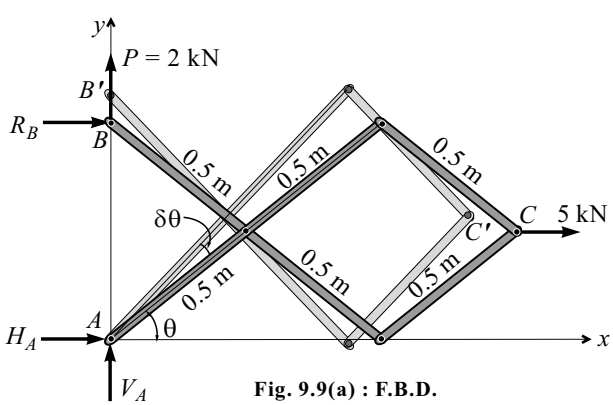

Fig. 9.9(a) : F.B.D.

Problem 10

Find the force P for the equilibrium of mechanism in the given position shown in the Fig. 8.10.

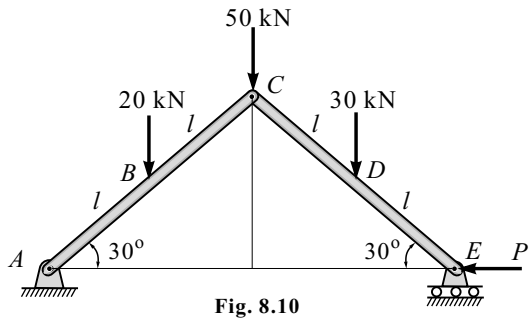

Fig. 8.10

Solution

Using coordinate method, select fixed point A as the origin.

Assume a small virtual angular displacement such that angle $\theta = 30^o$ decreases by $\delta\theta$. Refer to Fig. 8.10(a).

Point	Coordinate	Virtual Displacement (Direction)	Force (Direction)	Work Done
B	$y_B = l \sin\theta$	$\delta y_B = \lvert l \cos\theta\, \delta\theta \rvert$ (↓)	20 kN (↓)	+ ve
C	$y_C = 2l \sin\theta$	$\delta y_C = \lvert 2l \cos\theta\, \delta\theta \rvert$ (↓)	50 kN (↓)	+ ve
D	$y_D = l \sin\theta$	$\delta y_D = \lvert l \cos\theta\, \delta\theta \rvert$ (↓)	30 kN (↓)	+ ve
E	$x_E = 4l \cos\theta$	$\delta x_E = \lvert -4l \sin\theta\, \delta\theta \rvert$ (→)	P (←)	– ve

By principle of virtual work, we have

Total virtual work done = Zero

$$20 \times \delta y_B + 50 \times \delta y_C + 30 \times \delta y_D - P \times \delta x_E = 0$$

$$20 \times l \cos\theta\, \delta\theta + 50 \times 2l \cos\theta\, \delta\theta + 30 \times l \cos\theta\, \delta\theta - P \times 4l \sin\theta\, \delta\theta = 0$$

Put $\theta = 30^o$ and cancel out $\delta\theta$

$\therefore\ P = 64.95$ kN

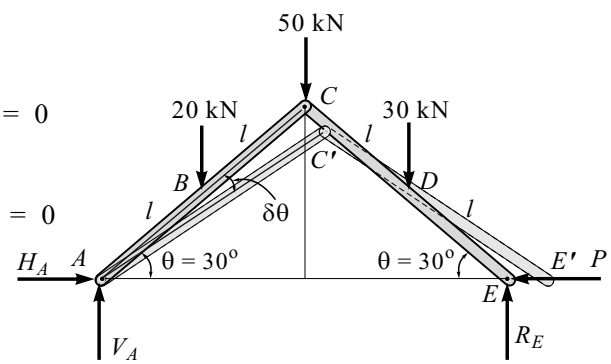

Fig. 8.10(a) : F.B.D.

Problem 11

Find the force Q for equilibrium of system shown in Fig. 8.11.

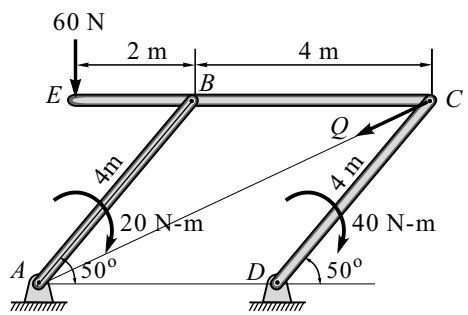

Fig. 8.11

Solution

Using coordinate method, select fixed point A as the origin.

Assume the system is given a small virtual angular displacement such that angle $\theta = 50^o$ increases by $\delta\theta$. Refer to Fig. 8.11(a).

Point	Coordinate	Virtual Displacement (Direction)	Force (Direction)	Work Done
C	$x_C = 4 + 4\cos\theta$	$\delta x_C = \lvert -4\sin\theta\,\delta\theta \rvert$ (←)	$Q\cos\theta/2$ (←)	+ ve
C	$y_C = 4\sin\theta$	$\delta y_C = \lvert 4\cos\theta\,\delta\theta \rvert$ (↑)	$Q\sin\theta/2$ (↓)	– ve
E	$y_E = 4\sin\theta$	$\delta y_E = \lvert 4\cos\theta\,\delta\theta \rvert$ (↑)	60 N (↓)	– ve
		$\lvert \delta\theta \rvert$ (↺)	20 N-m (↻)	– ve
		$\lvert \delta\theta \rvert$ (↺)	40 N-m (↻)	– ve

By virtual work principle, we have

Total virtual work done = Zero

$$Q\cos\frac{\theta}{2} \times \delta x_C - Q\sin\frac{\theta}{2} \times \delta y_C - 60 \times \delta y_E - 20\,\delta\theta - 40\,\delta\theta = 0$$

$$Q\cos\frac{\theta}{2} \times 4\sin\theta\,\delta\theta - Q\sin\frac{\theta}{2} \times 4\cos\theta\,\delta\theta - 60 \times 4\cos\theta\,\delta\theta - 20\,\delta\theta - 40\,\delta\theta = 0$$

Put $\theta = 50^\circ$ and cancel out $\delta\theta$

$\therefore\ Q = 126.75$ N

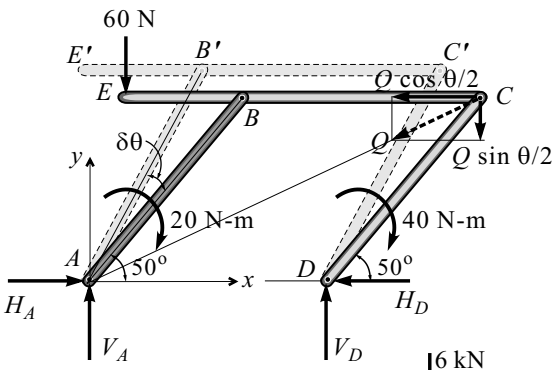

Fig. 8.11(a) : F.B.D.

Problem 12

Using virtual work method determine the value of force P to keep the loaded link mechanism in equilibrium. The mechanism is shown in the Fig. 8.12.

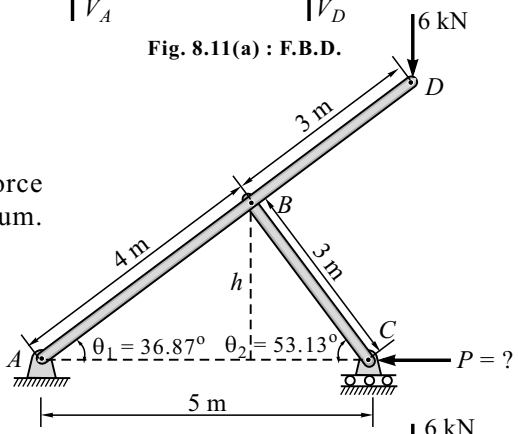

Fig. 8.12

Solution

$\theta_1 = 36.87^\circ$, $\theta_2 = 53.13^\circ$

Using coordinate method, select A as the origin.

$h = 4\sin\theta_1 = 3\sin\theta_2$

$4\cos\theta_1\,\delta\theta_1 = 3\cos\theta_2\,\delta\theta_2$

$$\delta\theta_2 = \frac{4\cos\theta_1\,\delta\theta_1}{3\cos\theta_2}$$

$x_C = 4\cos\theta_1 + 3\cos\theta_2$

$y_D = 7\sin\theta_1$

$\delta y_D = \lvert 7\cos\theta_1\,\delta\theta_1 \rvert$

$x_C = 4\cos\theta_1 + 3\cos\theta_2$

$\delta x_C = -4\sin\theta_1\,\delta\theta_2 - 3\sin\theta_2\,\delta\theta_2$

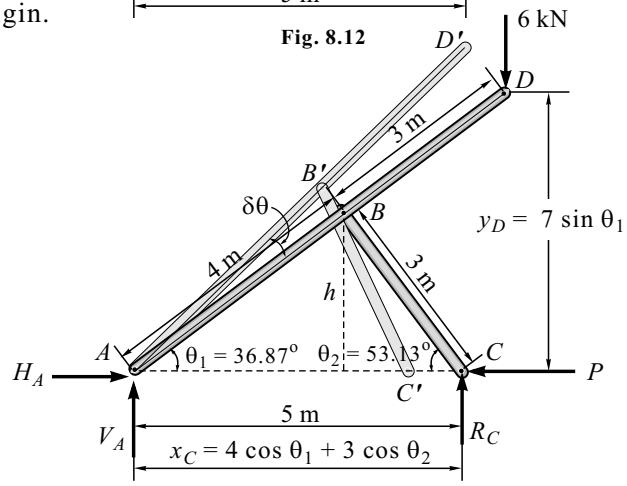

Fig. 8.12(a) : F.B.D.

$$\delta x_C = -4 \sin \theta_1 \delta\theta_1 - 3 \sin \theta_2 \times \frac{4 \cos \theta_1 \delta\theta_1}{3 \cos \theta_2}$$

$$\delta x_C = |-4 \sin \theta_1 \delta\theta_1 - \tan \theta_2 \times 4 \cos \theta_1 \delta\theta_1|$$

Assume a small virtual angular displacement in anticlockwise direction about a point A given to the mechanism such that θ increases by $\delta\theta$.

$\therefore$ Work done by P will be positive and that by 6 kN will be negative.

By virtual work principle, we have

Total virtual work done = Zero

$$P \times \delta x_C - 6 \times \delta y_D = 0$$

$$P\,(4 \sin \theta_1\, \delta\theta_1 + 4 \tan \theta_2 \cos \theta_1\, \delta\theta_1) - 6 \times 7 \cos \theta_1\, \delta\theta_1 = 0$$

$$P = \frac{42 \cos \theta_1}{4 \sin \theta_1 + 4 \tan \theta_2 \cos \theta_1}$$

Put $\theta_1 = 36.87^\circ$ and $\theta_2 = 53.13^\circ$

$$\therefore\ P = 5.04 \text{ kN}$$

Problem 13

A link mechanism formed by members AC and BC having equal length 0.6 m are acted upon by forces and couples as shown in the Fig. 8.13. Find the force F required to maintain equilibrium of system.

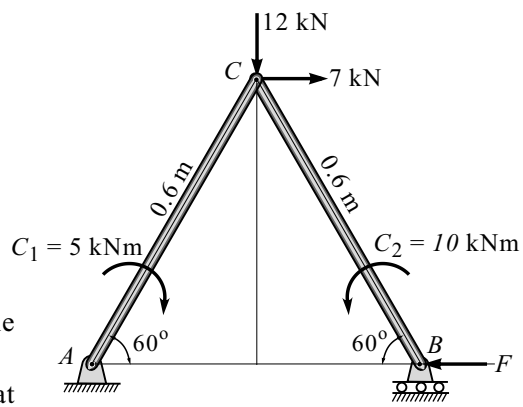

Fig. 8.13

Solution

Using coordinate method, select fixed point A as the origin.

Give a small virtual angular displacement such that angle $\theta = 60^\circ$ increases by $\delta\theta$. Refer to Fig. 8.13(a).

Point	Coordinate	Virtual Displacement (Direction)	Force (Direction)	Work Done
C	$x_C = 0.6 \cos \theta$	$\delta x_C = \lvert -0.6 \sin \theta\, \delta\theta \rvert$ (←)	7 kN (→)	– ve
C	$y_C = 0.6 \sin \theta$	$\delta y_C = \lvert 0.6 \cos \theta\, \delta\theta \rvert$ (↑)	12 kN (↓)	– ve
B	$x_B = 1.2 \cos \theta$	$\delta x_B = \lvert -1.2 \sin \theta\, \delta\theta \rvert$ (←)	F (←)	+ ve
		$\lvert \delta\theta \rvert$ (↺)	5 kNm (↻)	– ve
		$\lvert \delta\theta \rvert$ (↻)	10 kNm (↺)	– ve

By principle of virtual work, we have

Total virtual work done = Zero

$$-7 \times \delta x_C - 12 \times \delta y_C + F \times \delta x_B - 5 \times \delta\theta - 10 \times \delta\theta = 0$$

$$-7 \times 0.6 \sin\theta\,\delta\theta - 12 \times 0.6 \cos\theta\,\delta\theta$$
$$+ F \times 1.2 \sin\theta\,\delta\theta - 5 \times \delta\theta - 10 \times \delta\theta = 0$$

Put $\theta = 60^o$ and cancel out $\delta\theta$

$\therefore\ F = 21.4$ kN

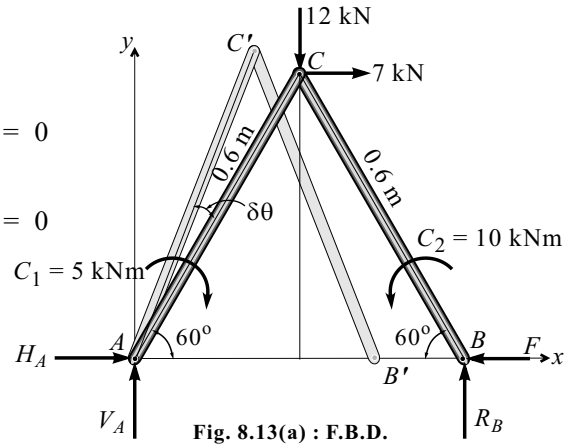

Fig. 8.13(a) : F.B.D.

Problem 14

The member AB of a lifting crane is hinged at A and is supported and adjusted by a hydraulic cylinder CD pinned at D. Find the force acting on hydraulic cylinder while lifting a load of 5000 N as shown in the Fig. 8.14.

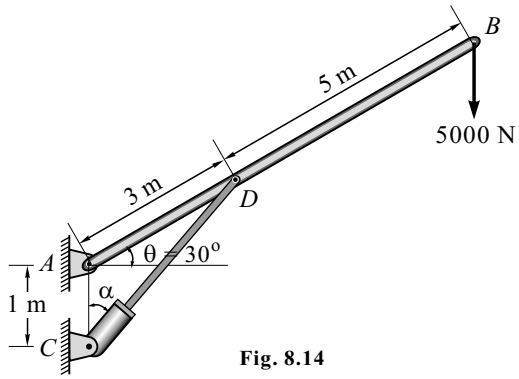

Fig. 8.14

Solution

Using coordinate method, in the given system, we can identify member CD as a two-force member in compression.

By geometry, we have

In $\Delta\, ACD$, by cosine rule

$$CD = \sqrt{1^2 + 3^2 - 2 \times 1 \times 3 \cos 120^o}$$

$$CD = 3.605 \text{ m}$$

By sine rule,

$$\frac{3}{\sin\alpha} = \frac{3.605}{\sin 120^o}$$

$$\alpha = 46.1^o$$

Select fixed point A as the origin. Give a small virtual angular displacement such that angle $\theta = 30^o$ increases by $\delta\theta$. Refer to Fig. 8.14(a).

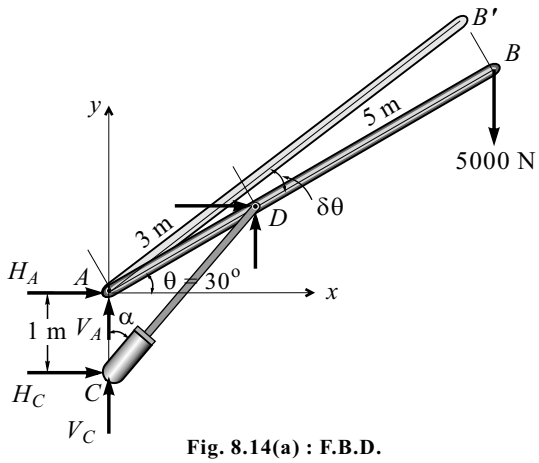

Fig. 8.14(a) : F.B.D.

Point	Coordinate	Virtual Displacement (Direction)	Force (Direction)	Work Done
D	$x_D = 3 \cos\theta$	$\delta x_D = \lvert -3 \sin\theta\,\delta\theta \rvert$ (←)	$F_{CD} \sin\alpha$ (→)	– ve
D	$y_D = 3 \sin\theta$	$\delta y_D = \lvert 3 \cos\theta\,\delta\theta \rvert$ (↑)	$F_{CD} \cos\alpha$ (↑)	+ ve
B	$y_B = 8 \sin\theta$	$\delta y_B = \lvert 8 \cos\theta\,\delta\theta \rvert$ (↑)	5000 N (↓)	– ve

By principle of virtual work, we have

Total virtual work done = Zero

$$-F_{CD} \sin\alpha \times \delta x_D + F_{CD} \cos\alpha \times \delta y_D - 5000 \times \delta y_B = 0$$

$$-F_{CD} \sin\alpha \times 3 \sin\theta\, \delta\theta + F_{CD} \cos\alpha \times 3 \cos\theta\, \delta\theta - 5000 \times 8 \cos\theta\, \delta\theta = 0$$

Put $\theta = 30^o$, $\alpha = 46.1^o$ and cancel out $\delta\theta$

$$F_{CD} (\cos 46.1^o \times 3 \cos 30^o - \sin 46.1^o \times 3 \sin 30^o) = 5000 \times 8 \cos 30^o$$

$$\therefore F_{CD} = 48066.85 \text{ N}$$

Problem 15

Find force P for equilibrium of the system shown in Fig. 8.15. Use principle of virtual work.

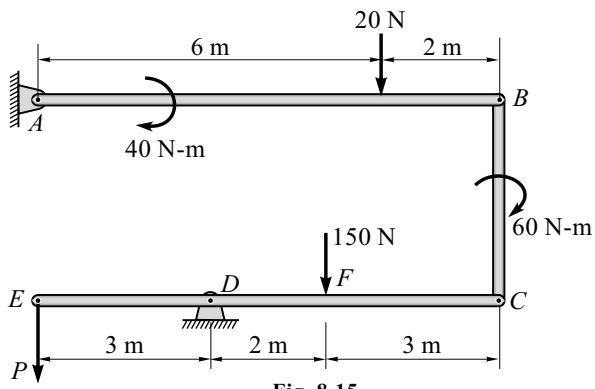

Fig. 8.15

Solution

Give a small virtual angular displacement as shown in Fig. 8.15(a).

$$\delta l = 8\,\delta\theta = 5\,\delta\phi$$

$$\therefore \delta\phi = \frac{8}{5}\,\delta\theta$$

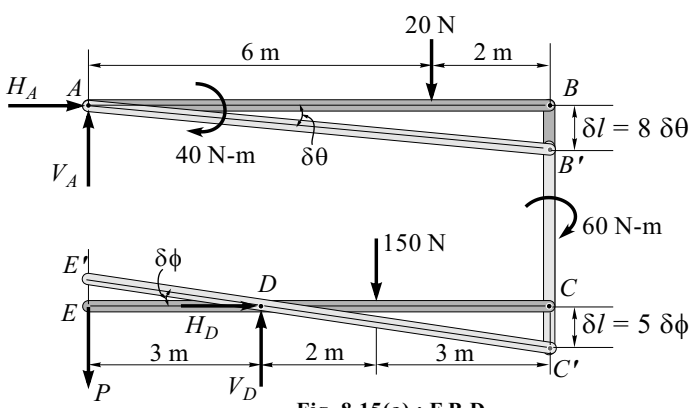

Fig. 8.15(a) : F.B.D.

Bar BC is not in rotation.

$\therefore$ Work done by couple 60 N-m is zero.

By principle of virtual work, we have

Total virtual work done = Zero

$$20 \times 6\,\delta\theta + 40\,\delta\theta + 150 \times 2\,\delta\phi - P \times 3\,\delta\phi = 0$$

$$20 \times 6\,\delta\theta + 40\,\delta\theta + 150 \times 2 \times \frac{8}{5}\,\delta\theta - P \times 3 \times \frac{8}{5}\,\delta\theta = 0$$

$$\therefore P = 133.33 \text{ N}$$

Problem 16

Force P is applied to maintain the equilibrium of given system shown in Fig. 8.16. Use principle of virtual work.

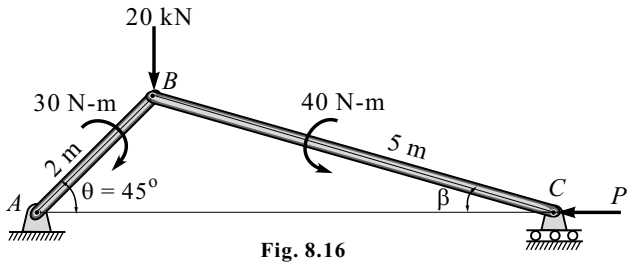

Fig. 8.16

Solution

From F.B.D. of the system shown in Fig. 8.16(a).

$$2 \sin \theta = 5 \sin \beta$$

$$2 \cos \theta \, \delta\theta = 5 \cos \beta \, \delta\beta$$

$$\delta\beta = \frac{2 \cos \theta \, \delta\theta}{5 \cos \beta}$$

$$\sin \beta = \frac{BD}{BC} = \frac{2 \sin 45^\circ}{5}$$

$$\therefore \beta = 15.79^\circ$$

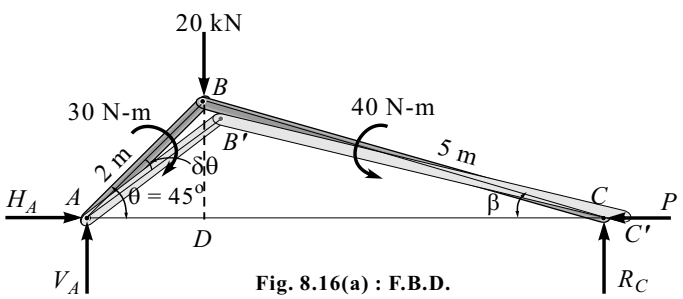

Fig. 8.16(a) : F.B.D.

Using coordinate method, select fixed point A as the origin.

Assume the system is given a small virtual angular displacement such that angle $\theta = 45^\circ$ decreases by $\delta\theta$. Refer to Fig. 8.16(a).

$\therefore$ Work done by force 20 N and couples 30 N-m and 40 N-m will be positive, whereas work done by P will be negative.

Point *B* (20 N)

$$y_B = 2 \sin \theta \qquad \therefore \delta y_B = |2 \cos \theta \, \delta\theta|$$

Point *C* (*P* N)

$$x_B = AD + CD = 2 \cos \theta + 5 \cos \beta$$

$$\delta x_B = -2 \sin \theta \, \delta\theta - 5 \sin \beta \, \delta\beta$$

$$\therefore \delta x_B = \left| -2 \sin \theta \, \delta\theta - 5 \sin \beta \times \frac{2 \cos \theta \, \delta\theta}{5 \cos \beta} \right|$$

By principle of virtual work, we have

Total virtual work done = Zero

$$20 \times \delta y_B - P \times \delta x_B + 30 \, \delta\theta + 40 \times \delta\beta = 0$$

$$20 \times 2 \cos \theta \, \delta\theta - P \times \left(2 \sin \theta + 5 \sin \beta \times \frac{2 \cos \theta}{5 \cos \beta}\right) \delta\theta + 30 \, \delta\theta + 40 \times \frac{2 \cos \theta}{5 \cos \beta} \, \delta\theta = 0$$

Put $\theta = 45^\circ$, $\beta = 15.79^\circ$ and cancel out $\delta\theta$

$$\therefore P = 38.61 \text{ N}$$

Problem 17

By using principle of virtual work solve the problem given that a non-homogeneous ladder as shown in Fig. 8.17 rests against a smooth wall at A and a rough horizontal floor at B. The mass of the ladder is 30 kg and is concentrated at 2 m from the bottom. The coefficient of static friction between the ladder and the floor is 0.35. Will the ladder stand in 60° position as shown?

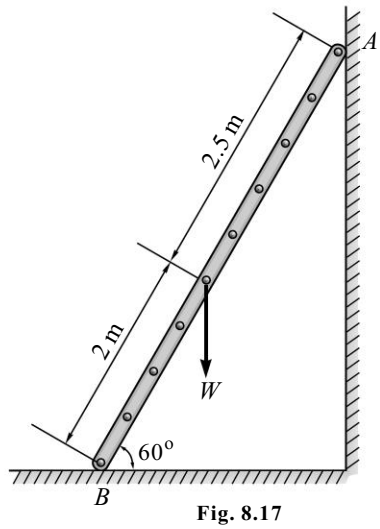

Fig. 8.17

Solution

Using coordinate method, select O as the origin.

Assume a small virtual angular displacement in anticlockwise direction about a point O given to the ladder AB such that θ increases by δθ. Refer to Fig. 8.17(a).

Let F_1 be frictional force required to maintain the equilibrium.

Work done by normal reaction N_1 and N_2 will be zero because displacement is perpendicular to direction of force.

Point	Coordinate	Virtual Displacement (Direction)	Force (Direction)	Work Done
B	$x_B = 4.5 \cos\theta$	$\delta x_B = \lvert -4.5 \sin\theta\, \delta\theta \rvert$ (→)	F_1 (→)	+ ve
C	$y_C = 2 \sin\theta$	$\delta y_C = \lvert 2 \cos\theta\, \delta\theta \rvert$ (↑)	30×9.81 kN (↓)	− ve

By virtual work principle, we have

Total virtual work done = Zero

$$-30 \times 9.81 \times \delta y_C + F_1 \times \delta x_B = 0$$

$$-30 \times 9.81 \times 2 \cos\theta\, \delta\theta + F_1 \times 4.5 \sin\theta\, \delta\theta = 0$$

$$F_1 = 75.52 \text{ N}$$

By observation, we have

$$N_1 = 30 \times 9.81$$

$$N_1 = 294.3 \text{ N}$$

For limiting equilibrium condition

$$F_{max} = \mu N$$

$$F_{max} = 0.35 \times 294.3$$

$$F_{max} = 103 \text{ N}$$

$\because F_{max} > F_1$

$\therefore$ Ladder is in static equilibrium condition and hence it will not slip.

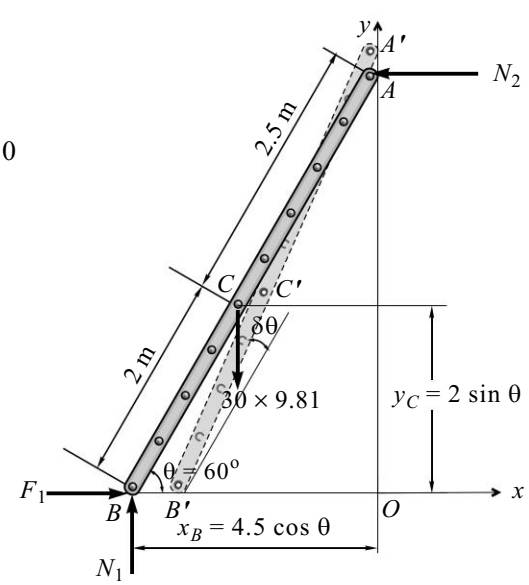

Fig. 8.17(a) : F.B.D. of Ladder

Problem 18

The lever mechanism shown in Fig. 8.18 is used to lift a weight of 1 kN. Using principle of virtual work, determine the value of force P required to lift this weight.

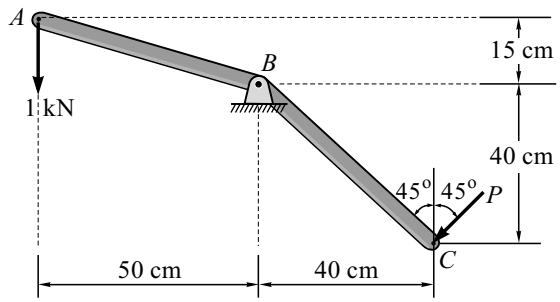

Fig. 8.18

Solution

$$\tan\theta = \frac{15}{50} \qquad \therefore\ \theta = 16.7^{\circ}$$

$$AB = \sqrt{15^2 + 50^2} = 52.2 \text{ cm}$$

$$BC = \sqrt{40^2 + 40^2} = 56.57 \text{ cm}$$

$$AA' = 52.2\,\delta\theta \qquad CC' = 56.57\,\delta\theta$$

Give a small virtual angular displacement $\delta\theta$ in anticlockwise direction with respect to point B. Refer to Fig. 8.18(a).

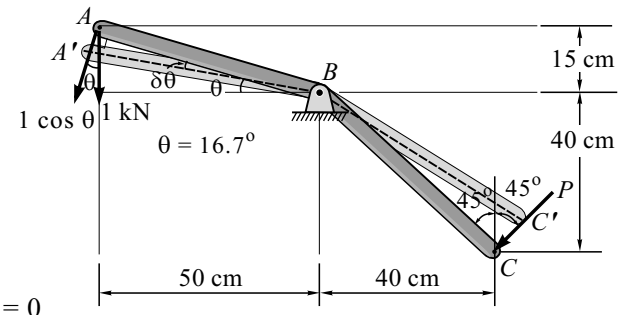

Fig. 8.18(a) : F.B.D.

By virtual work principle, we have

Total virtual work done = Zero

$$1\cos 16.7^{\circ} \times AA' + (-P) \times CC' = 0$$

$$1\cos 16.7^{\circ} \times 52.2\,\delta\theta + (-P) \times 56.57\,\delta\theta = 0$$

$$\therefore P = 0.884 \text{ kN}$$

Problem 19

Two masses m_1 and m_2 are resting in equilibrium on two smooth inclined planes AB and AC as shown in Fig. 8.19. Planes AB and AC make θ_1 and θ_2 angles with the horizontal respectively. Using the concept of virtual work, shown that the ratio of masses m_1 and m_2 is given by : $\dfrac{m_1}{m_2} = \dfrac{\sin\theta_2}{\sin\theta_1}$

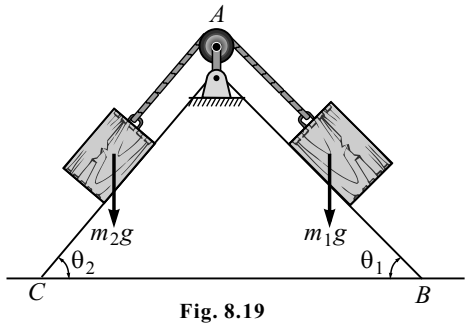

Fig. 8.19

Solution

Let us give a small linear displacement δl along the inclined plane as shown in Fig. 8.19(a).

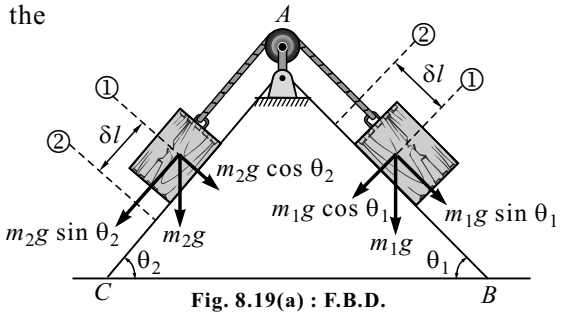

Fig. 8.19(a) : F.B.D.

By virtual work principle, we have

Total virtual work done = Zero

$$m_2 g \sin\theta_2 \times \delta l - m_1 g \sin\theta_1 \times \delta l = 0$$

$$m_1 \sin\theta_1 = m_2 \sin\theta_2$$

$$\frac{m_1}{m_2} = \frac{\sin\theta_2}{\sin\theta_1}$$

Note : $m_1 g$ and $m_2 g$ are having two components $m_1 g \sin\theta_1$, $m_1 g \cos\theta_1$ and $m_2 g \sin\theta_1$, $m_2 g \cos\theta_1$ respectively. Virtual work done is possible by components $m_2 g \sin\theta_2$ and $m_1 g \sin\theta_1$. The other two component are perpendicular to direction of displacement. Therefore, for work done by them (i.e., $m_1 g \cos\theta_1$ & $m_2 g \cos\theta_2$) is zero.

Problem 20

A pulley arrangement shown in Fig. 8.20 is used for hoisting a load Q. Find the ratio between the forces P and Q in the case of equilibrium of the system. The radii of two steps of the pulley are r_1 and r_2. Neglect friction. Use virtual work principle.

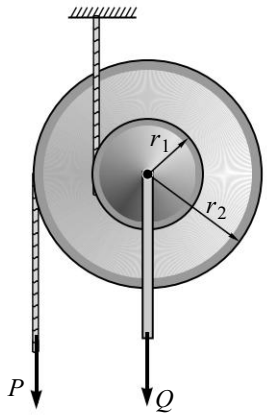

Fig. 8.20

Solution

The step pulley is about to roll on rope having tension T without slipping. Therefore, point of contact (I) with rope is identified as *Instantaneous Centre of Rotation* (ICR). So at the given instant in limiting equilibrium condition, pulley is performing fixed axis rotation about point I.

Let us give small virtual angular displacement $\delta\theta$ in anticlockwise direction about point I as shown in Fig. 8.20(a).

By geometry, virtual displacement is given as follows :

$$AA' = (r_2 - r_1)\,\delta\theta$$

$$BB' = r_1\,\delta\theta$$

By virtual work principle, we have

Total virtual work done = Zero

$$(P)(AA') + (-Q)(BB') = 0$$

$$P \times (r_2 - r_1)\,\delta\theta - Q\,r_1\,\delta\theta = 0$$

$$\therefore \frac{P}{Q} = \frac{r_1}{r_2 - r_1}$$

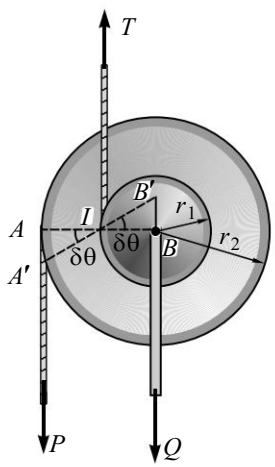

Fig. 8.20(a) : F.B.D.

Problem 21

Find the relation between forces P and Q acting on the differential pulley shown in Fig. 8.21. Solve the problem by using principle of virtual work.

Please note r_1 = radius of larger pulley

and r_2 = radius of smaller pulley.

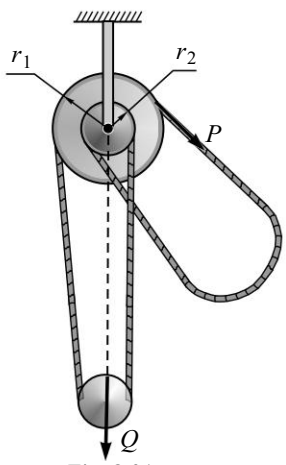

Fig. 8.21

Solution

Give a small virtual angular displacement $\delta\theta$ in anticlockwise direction w.r.t. point O. So points A, B and C will shift to A', B' and C' respectively as shown in Fig. 8.28(a).

From geometry, we have

$$AA' = r_1\,\delta\theta$$

$$BB' = r_2\,\delta\theta$$

$$CC' = r_1\,\delta\theta$$

By virtual work principle, we have

Total virtual work done = Zero

$$\left(\frac{Q}{2}\right)(AA') + \left(-\frac{Q}{2}\right)(BB') + (-P)(CC') = 0$$

$$\frac{Q}{2} \times r_1\,\delta\theta - \frac{Q}{2} \times r_2\,\delta\theta - P \times r_1\,\delta\theta = 0$$

$$\frac{Q}{2}(r_1 - r_2) = Pr_1$$

$$\therefore \frac{P}{Q} = \frac{r_1 - r_2}{2r_1}$$

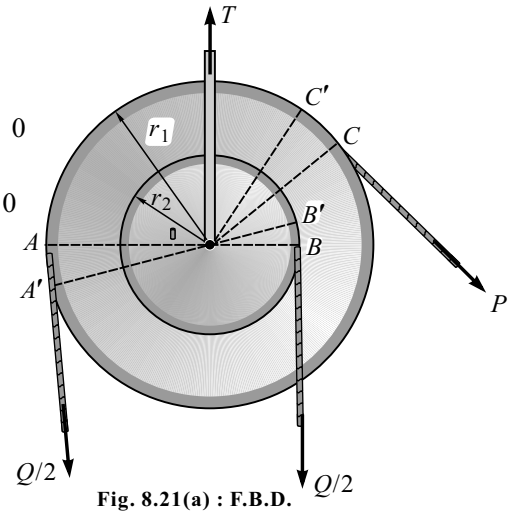

Fig. 8.21(a) : F.B.D.

Problem 22

A cylinder of self-weight W is supported by external force P as shown in Fig. 8.22. Find relationship between P and W for equilibrium by the principle of virtual work.

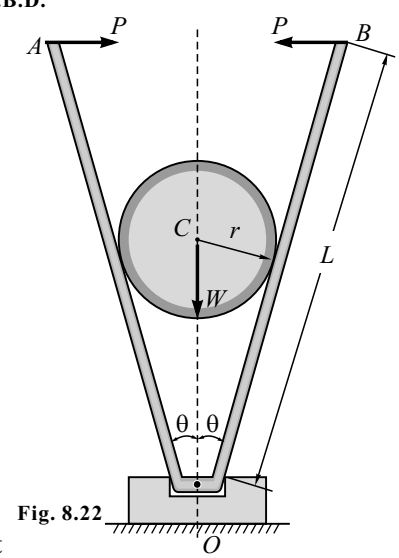

Fig. 8.22

Solution

Using coordinate method, select O as the origin.

Considering position of A and B w.r.t. O

$$x_A = x_B = l \sin\theta$$

$$\delta x_A = \delta x_B = |\, l \cos\theta\, \delta\theta \,|$$

Position of C w.r.t. O

$$\sin\theta = \frac{r}{OC} \qquad \therefore\ OC = r \operatorname{cosec}\theta$$

$$y_C = r \operatorname{cosec}\theta \quad \therefore\ \delta y_C = |\, -r \operatorname{cosec}\theta \cdot \cot\theta\, \delta\theta \,|$$

Assume the bar OA and OB are given small virtual displacement such that θ increases by $\delta\theta$. Refer to Fig. 8.22(a).

$\therefore$ Work done by both forces P will be negative and work done by W will be positive.

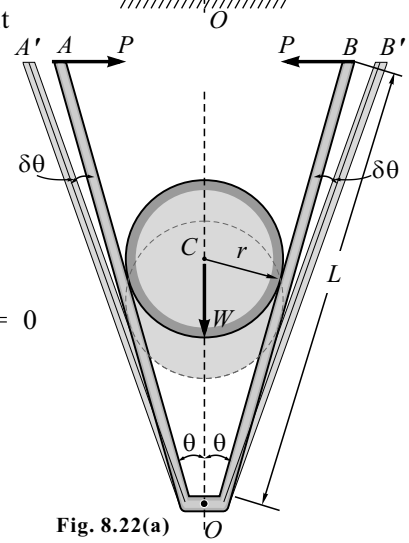

Fig. 8.22(a)

By virtual work principle, we have

Total virtual work done = Zero

$$-P \times \delta x_A - P \times \delta x_B + W \times \delta y_C = 0$$

$$-P \times l \cos\theta\, \delta\theta - P \times l \cos\theta\, \delta\theta + W \times r \operatorname{cosec}\theta \cdot \cot\theta\, \delta\theta = 0$$

$$2P\, l \cos\theta = W\, r \operatorname{cosec}\theta \cdot \cot\theta$$

$$P = \frac{W\, r \operatorname{cosec}\theta \cdot \cot\theta}{2l \cos\theta}$$

$$P = \frac{W\, r \operatorname{cosec}^2\theta}{2l}$$

Problem 23

A uniform rod AB of length '$3R$' and weight W rests inside a hemispherical bowl of radius 'R' as shown in Fig. 8.23. Neglecting the friction, determine equilibrium angle corresponding to θ. Use principle of virtual work only.

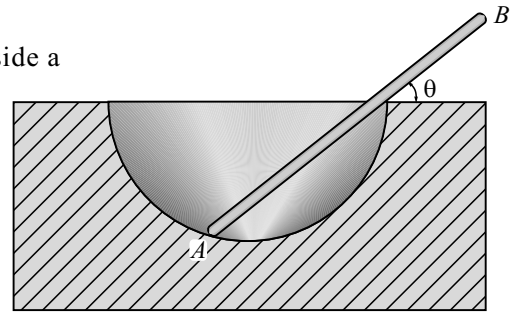

Fig. 8.23

Solution

In Δ AOM and Δ AGN

$$OM = R \sin 2\theta \; ; \quad GN = 1.5\, R \sin \theta$$

But $OM - GN = y$

$$y = R \sin 2\theta - 1.5\, R \sin \theta$$

$$\therefore \delta y = (2R \cos 2\theta - 1.5\, R \cos \theta)\, \delta\theta$$

where δy is virtual displacement of G to G' corresponding to angular virtual displacement of the rod shown in Fig. 8.23(a). Work done by normal reactions N_A and N_C is zero.

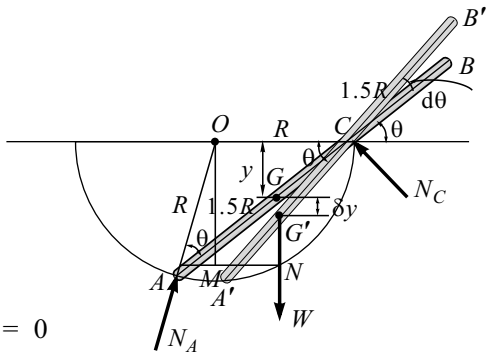

Fig. 8.23(a) : F.B.D.

Applying principle of virtual work $dU = 0$

$$W \cdot \delta y = 0 \quad \Rightarrow W \cdot (2R \cos 2\theta - 1.5\, R \cos \theta)\, \delta\theta = 0$$

$$2R \cos 2\theta = 1.5\, R \cos \theta \qquad [\because W \neq 0,\ \delta\theta \neq 0]$$

$$2(2 \cos^2 \theta - 1) = 1.5 \cos \theta$$

$$4 \cos^2 \theta - 2 = 1.5 \cos \theta$$

$$4 \cos^2 \theta - 1.5 \cos \theta - 2 = 0$$

$$\cos \theta = \frac{1.5 \pm \sqrt{(1.5)^2 + 4 \times 4 \times 2}}{8}$$

$$\therefore \theta = 23.21^{\circ}$$

Problem 24

Using the principle of virtual work, find the axial force in the member DE of the simple truss loaded and supported as shown in Fig. 8.24.

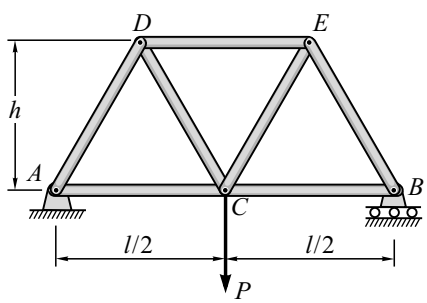

Fig. 8.24

Solution

From principle of virtual work, $\Sigma\, du = 0$

$$\Sigma\, du = P\left(\frac{l}{2}\,\delta\theta\right) + T \sin \theta\ (\text{arc } DD' \times 2) = 0$$

$$P\,\frac{l}{2}\,\delta\theta + (T \sin \theta)\,(AD\,\delta\theta) \times 2 = 0$$

$$T = \frac{-Pl}{4(AD) \sin \theta}$$

$$T = \frac{-Pl}{4h} \quad \text{(negative sign indicates compressive)}$$

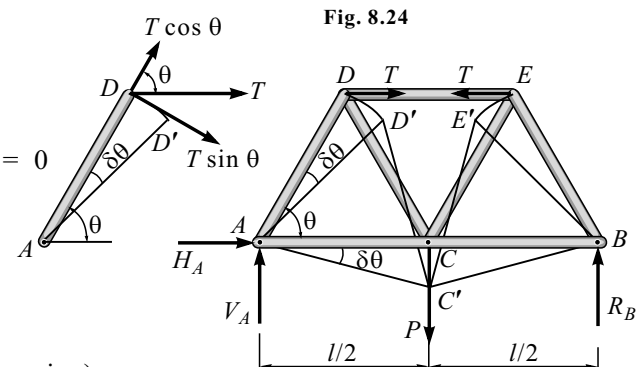

Fig. 8.24(b) : F.B.D.

Problem 25

A vertical load W = 600 N is applied to the linkage at B as shown in Fig. 8.25. The constant of the spring K = 2500 N/m and the spring is unstretched when AB and BC are horizontal. Neglecting the weight of linkage, find the angle θ, which must be satisfied when the linkage is in equilibrium.

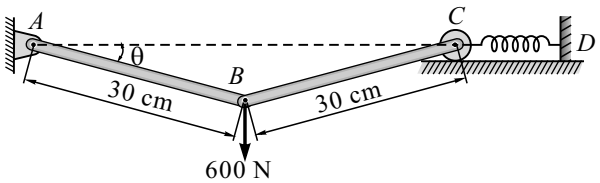

Fig. 8.25

Solution

Using coordinate method, select A as the origin.

Assume a small virtual angular displacement in clockwise direction about point A given to the linkage AB such that θ increases by δθ. Refer to Fig. 8.25(a).

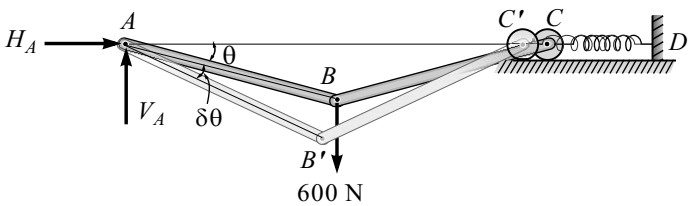

Fig. 8.25(a) : F.B.D.

$$l = 30 \text{ cm and } K = 2500 \text{ N/m}$$

Deformation of spring $x = 2l - 2l\cos\theta$

$$x = 60(1 - \cos\theta)$$

Spring force $F = 2Kl(1 - \cos\theta)$

$$F = 2 \times 2500 \times 0.3 \times (1 - \cos\theta)$$

$$F = 150000\,(1 - \cos\theta)$$

Point	Coordinate	Virtual Displacement (Direction)	Force (Direction)	Work Done
B	$y_B = 30\sin\theta$	$\delta y_B = \lvert 30\cos\theta\,\delta\theta \rvert$ (↓)	600 N (↓)	+ ve
C	$x_B = 60\cos\theta$	$\delta x_B = \lvert -60\sin\theta\,\delta\theta \rvert$ (←)	F (→)	− ve

By virtual work principle, we have

Total virtual work done = Zero

$$W \times \delta y_B - F \times \delta x_B = 0$$

$$W \times l\cos\theta\,\delta\theta - 2Kl(1 - \cos\theta) \times 2l\sin\theta\,\delta\theta = 0$$

Cancel out δθ and l, we get

$$W = 4Kl\tan\theta\,(1 - \cos\theta)$$

Putting the values W = 600 N, l = 30 cm and K = 2500 N/m, we get

$$600 = 4 \times 2500 \times 30\tan\theta\,(1 - \cos\theta)$$

$$\therefore \theta = 40.2^{\circ}$$

Problem 26

Calculate the reactions at the supports A, B and C of the beam loaded as shown in Fig. 8.26 by the principle of virtual work.

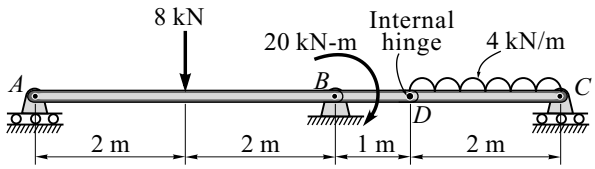

Fig. 8.26

Solution

(i) Draw the F.B.D. of beam AC.

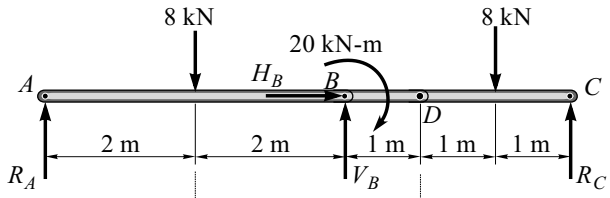

Fig. 8.26(i) : F.B.D.

(ii) Lift end C about point D such that DC rotates by $\delta\theta$.

By principle of virtual work, we have

Total virtual work done = Zero

$\Sigma\, \delta u = 0$

$R_C \times 2\,\delta\theta - 8 \times 1\,\delta\theta = 0$

$R_C = 4$ kN (↑)

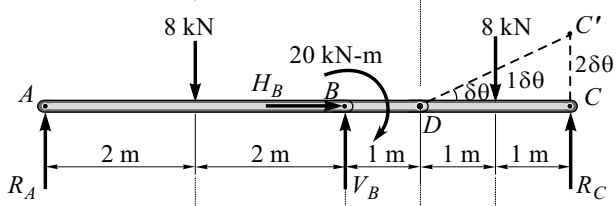

Fig. 8.26(ii)

(iii) Lift internal hinge D, such that portion AD rotates by $\delta\theta_1$ about A and portion CD rotates by $\delta\theta_2$ about C.

$\Sigma\, \delta u = 0$

$-8 \times 2\,\delta\theta_1 + V_B \times 4\,\delta\theta_1 - 8 \times \delta\theta_2 - 20\,\delta\theta_1 = 0$

$-16\,\delta\theta_1 - 20\,\delta\theta_1 + 4V_B\,\delta\theta_1 - 20\,\delta\theta_1 = 0$

$4V_B = 16 + 20 + 20$

$V_B = 14$ kN (↑)

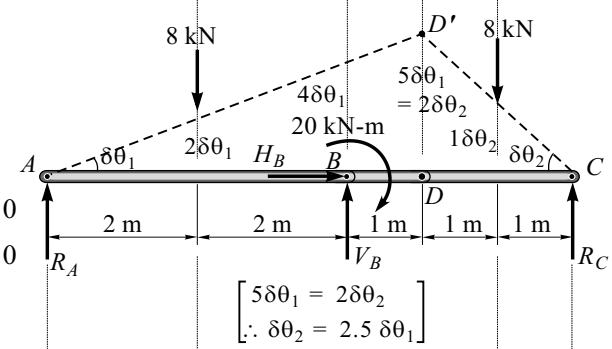

Fig. 8.26(iii)

(iv) Lift the entire beam AC, vertically up by δy.

$\Sigma\, \delta u = 0$

$R_A \times \delta y - 8 \times \delta y + V_B \times \delta y - 8 \times \delta y + R_C \times \delta y = 0$

$R_A = 8 + 8 - 14 - 4$

$R_A = -2$ kN

$\therefore R_A = 2$ kN (↓)

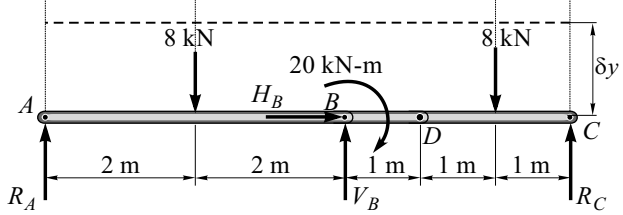

Fig. 8.26(iv) : F.B.D.

(v) $H_A = 0$

(Since there is no horizontal force.)

Problem 27

Using principle of virtual work, determine the reactions at all the supports of the beam shown in Fig. 8.27. A is a fixed support, B and C are roller supports and H_1, H_2 are internal hinges.

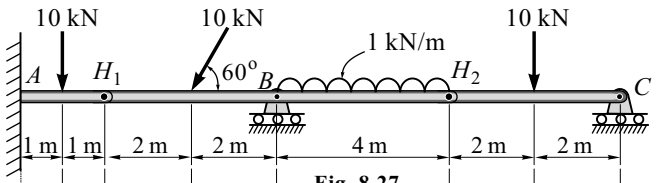

Fig. 8.27

Solution

(i) Draw the F.B.D. of beam AC.

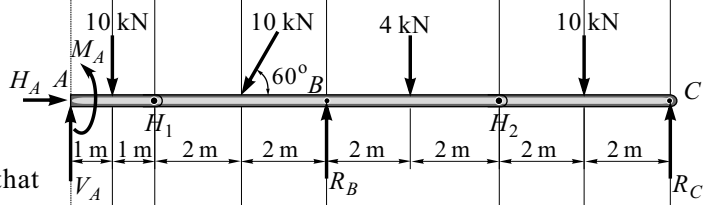

Fig. 8.27(i) : F.B.D.

(ii) Lift end C about point H_2 such that H_2C rotates by $\delta\theta$. By principle of virtual work, we have

Total virtual work done = Zero

$\Sigma\, \delta u = 0$

$R_C \times 4\,\delta\theta - 10 \times 2\,\delta\theta = 0$

$R_C = 5$ kN (↑)

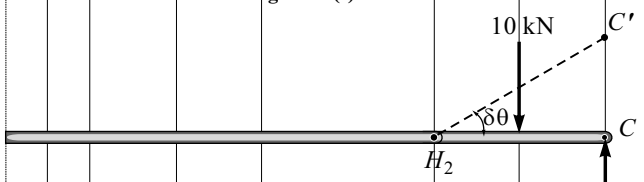

Fig. 8.27(ii)

(iii) Lift internal hinge H_2, such that portion H_1H_2 rotates by $\delta\theta_1$ about H_1 and portion CH_2 rotates by $\delta\theta_2$ about C.

$8\,\delta\theta_1 = 4\,\delta\theta_2 \quad \therefore\ 2\,\delta\theta_1 = \delta\theta_2$

$-10 \sin 60^\circ \times 2\,\delta\theta_1 + R_B \times 4\,\delta\theta_1$

$\quad - 4 \times 6\,\delta\theta_1 - 10 \times 2\,\delta\theta_2 = 0$

$R_B = 20.33$ kN (↑)

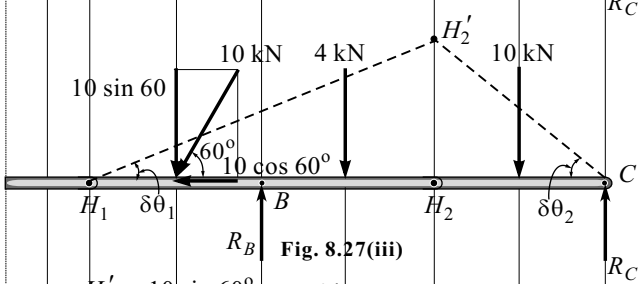

Fig. 8.27(iii)

(iv) Lifting internal hinge H_1

$2\,\delta\theta_1 = 8\,\delta\theta_2 \quad \therefore\ \delta\theta_1 = 4\,\delta\theta_2$

$\Sigma\, \delta u = 0$

$-10 \times \delta\theta_1 + M_A \times \delta\theta_1 - 10 \sin 60^\circ$
$\times 6\,\delta\theta_2 + 20.33\,\delta\theta_2 \times 4 - 4 \times 2\,\delta\theta_2 = 0$

$-10 \times 4\,\delta\theta_2 + M_A \times 4\,\delta\theta_2$

$\quad - 10 \sin 60^\circ \times 6\,\delta\theta_2 - 8\,\delta\theta_2 = 0$

$M_A = 4.66$ kN-m (↺)

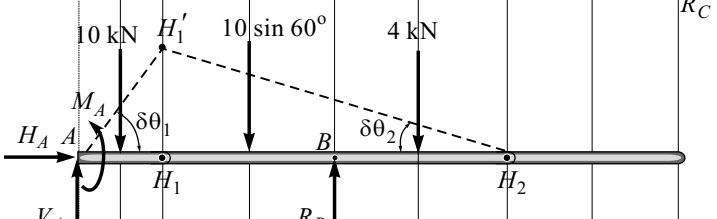

Fig. 8.27(iv)

(v) Lifting end A

$V_A \times 2\,\delta\theta - 10 \times \delta\theta - 4.66 \times \delta\theta = 0$

$V_A = 7.49$ kN (↑)

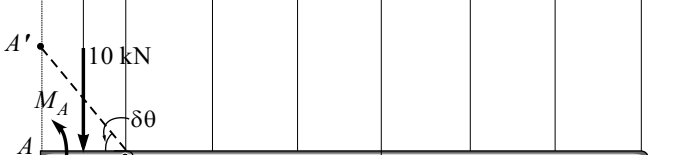

Fig. 8.27(v)

(vi) Shifting end C towards right

$H_A = 5$ kN (→)

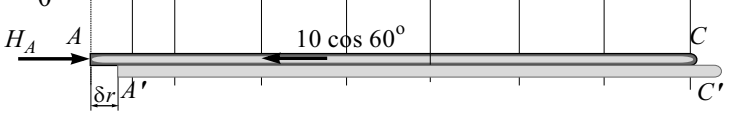

Fig. 8.27(vi)

Problem 28

Find the support reaction at A, B and C for the beam shown in Fig. 8.28 by using virtual work principle. Point D and E are internal hinges.

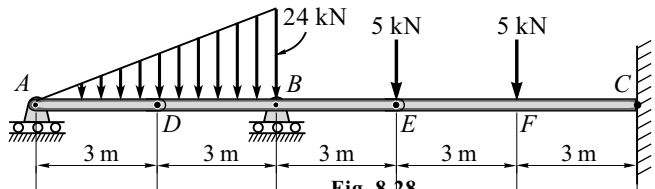

Fig. 8.28

Solution

(i) Draw the F.B.D. of beam AC.

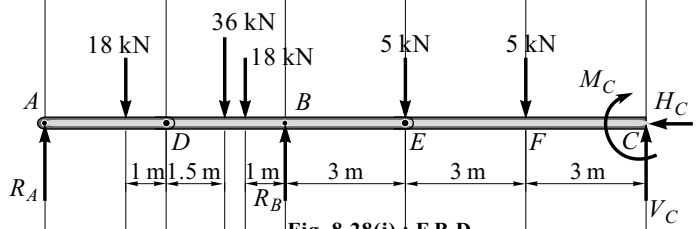

Fig. 8.28(i) : F.B.D.

(ii) Lifting end A

$\Sigma\, \delta u = 0$

$R_A \times 3\,\delta\theta - 18 \times \delta\theta = 0$

$R_A = 6$ kN (↑)

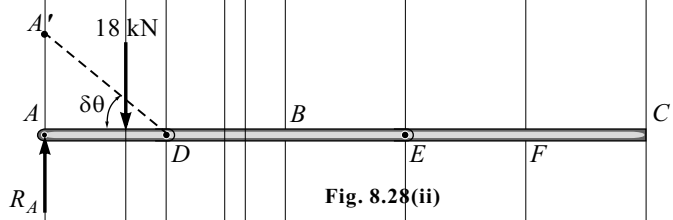

Fig. 8.28(ii)

(iii) Lifting end D

$\Sigma\, \delta u = 0$

$-18 \times 2\,\delta\theta_1 - 36 \times 4.5\,\delta\theta_2$
$\quad - 18 \times 4\,\delta\theta_2 + R_B \times 3\,\delta\theta_2 = 0$

$3\,\delta\theta_1 = 6\,\delta\theta_2 \quad \therefore\ \delta\theta_1 = 2\,\delta\theta_2$

$-18 \times 4\,\delta\theta_2 - 36 \times 4.5\,\delta\theta_2$
$\quad - 18 \times 4\,\delta\theta_2 + R_B \times 3\,\delta\theta_2 = 0$

$R_B = 102$ kN (↑)

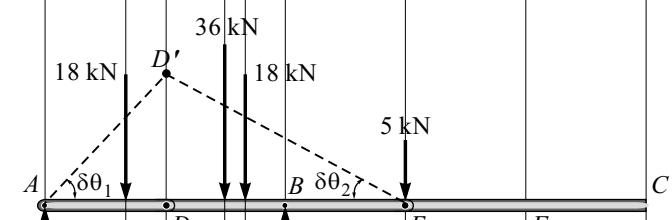

Fig. 8.28(iii)

(iv) Lifting end E

$6\,\delta\theta_1 = 6\,\delta\theta_2 \quad \therefore\ \delta\theta_1 = \delta\theta_2$

$\Sigma\, \delta u = 0$

$-36\,\delta\theta_1 \times 1.5 - 18 \times 2\,\delta\theta_1 - 5 \times 6\,\delta\theta_1$
$\quad + 102 \times 3\,\delta\theta_1 - 5 \times 3\,\delta\theta_1 + M_C \times \delta\theta_1 = 0$

$M_C = -171$ kN-m

$M_C = 171$ kN-m (↻)

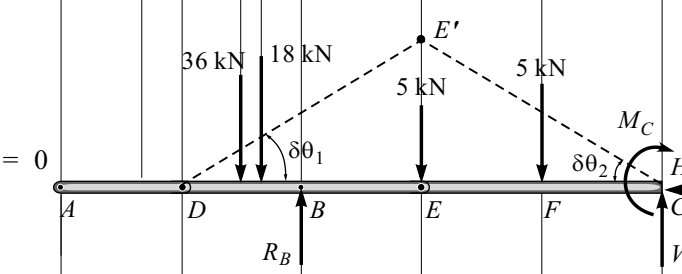

Fig. 8.28(iv)

(v) Lifting end C

$171 \times \delta\theta + V_C \times 6\,\delta\theta - 5 \times 3\,\delta\theta = 0$

$V_C = -26$ kN

$V_C = 26$ kN (↓)

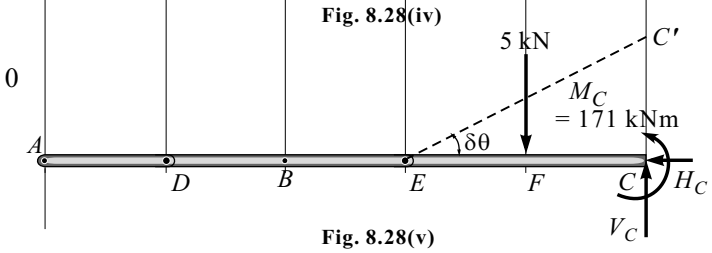

Fig. 8.28(v)

(vi) Since there is no horizontal force

$\therefore\ H_C = 0$

SUMMARY

- **Work Done by Force :** The work (U) done by force F on the body during this displacement is the product of component of force (F cos θ) and the displacement S.

$$\text{Work done } (U) = F \cos\theta \times S$$

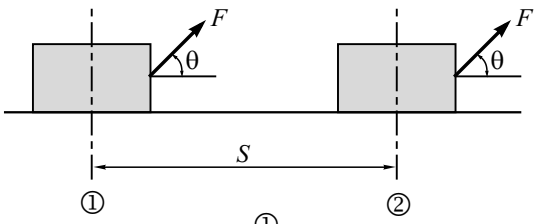

- **Work Done by Couple :** The work done by couple is given by product of magnitude of couple (M) and angular displacement (θ).

$$U = M \times \theta$$

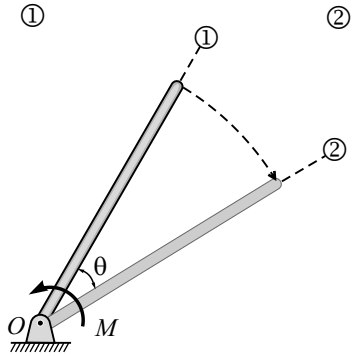

- **Principle of Virtual Work :** If the system of rigid body in equilibrium is given a small virtual (imaginary) displacement, consistent with geometrical conditions then total virtual work done by force and couple acting on system is equal to zero.

- **Procedure to Solve a Problem by Coordinate Method**

1. Draw the F.B.D. of the system of mechanism.
2. Select the origin, such a point, which is stationary when the virtual displacement is given to the system. Draw X and Y axis w.r.t. origin.
3. Introduce a variable angle θ which is geometrical condition of the equilibrium configuration.
4. Give a small virtual displacement to the system such that there is an increase or decrease in value of θ by a small amount δθ.
5. Observe the active forces in the system which are responsible to do virtual work and find their coordinates in terms of variable θ w.r.t. selected origin.
6. To get virtual displacement, differentiate the coordinate w.r.t. θ. This small incremental virtual displacement value should always be considered as + ve, i.e., $|\pm \delta x| / |\pm \delta y|$.
7. If active forces are in the direction of virtual displacement then consider such virtual work to be positive, otherwise negative.
8. If a couple is involved in the system then the couple which acts in the direction of angle θ is considered as positive virtual work, otherwise negative.
9. Apply principle of virtual work which says total virtual work done is zero, i.e., $\Sigma U = 0$.
10. Eliminate the common term δθ from the equation put the value of θ and get the required answer.

EXERCISES

[I] Problems

1. Find the reactions at the support for the beam shown in Fig. 8.E1 by principle of virtual work.

[***Ans.*** $R_B = 2$ kN, $V_A = 7$ kN and $M_A = 14$ kNm (↺)]

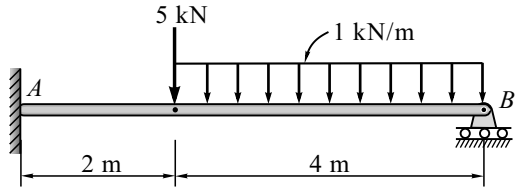

Fig. 8.E1

2. Find the reactions at the support for the beam shown in Fig. 8.E2 by principle of virtual work.

[***Ans.*** $H_A = 35.36$ kN (←), $V_A = 7.17$ kN (↑) and $V_B = 28.18$ kN (↑)]

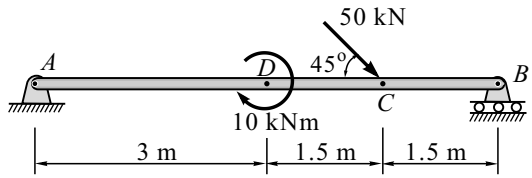

Fig. 8.E2

3. Find the reactions at the support for the beam shown in Fig. 8.E3 by principle of virtual work.

[***Ans.*** $R_B = 44.17$ kN (60°), $V_A = 36.75$ kN (↑) and $H_A = 22.09$ kN (→)]

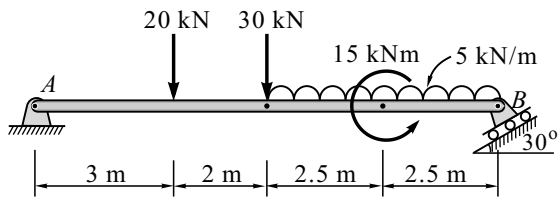

Fig. 8.E3

4. Using principle of virtual work, calculate the reactions at the supports for the beam shown in Fig. 8.E4.

[***Ans.*** $R_B = 8.21$ kN (60°), $V_A = 8.55$ kN (↑) and $H_A = 1.56$ kN (←)]

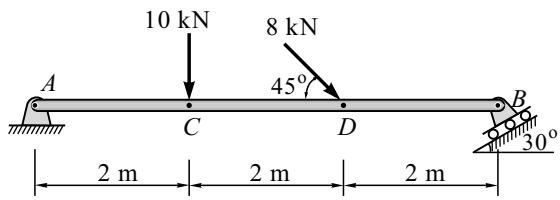

Fig. 8.E4

5. Find the reactions at the supports A, B and C for the beam structure loaded as shown in Fig. 8.E5. Use virtual work method only.

[***Ans.*** $H_A = 0$, $V_A = 13.33$ kN (↓), $V_D = 53.33$ kN (↑), $H_B = 0$, $V_B = 48.15$ kN (↑) and $V_C = 65.18$ kN (↑)]

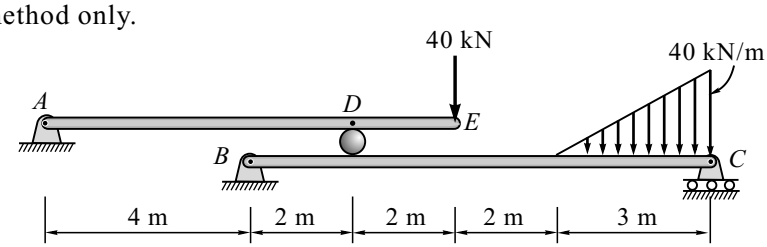

Fig. 8.E5

6. By using principle of virtual work, determine the support reactions in Fig. 8.E6. *D* and *E* are internal hinges.

[**Ans.** $H_A = 0$,
$V_A = 15$ kN (↑),
$M_A = 10$ kNm (↺),
$V_B = 5$ kN (↑) and
$V_C = 25$ kN (↑)]

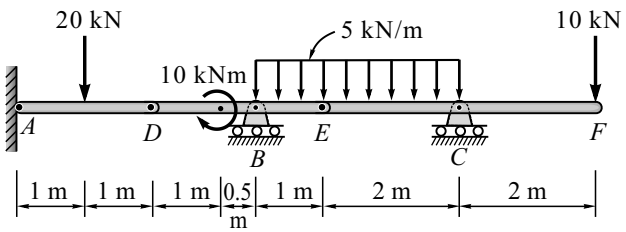

Fig. 8.E6

7. Using the principle of virtual work, determine the reactions at *A, B* and C for the beam shown in Fig. 8.E7.

[**Ans.** $V_A = 0.5$ kN (↑),
$V_B = 8.5$ kN (↑),
$V_C = 7$ kN (↑),
$H_C = 0$ and
$M_C = 27$ kNm (↻)]

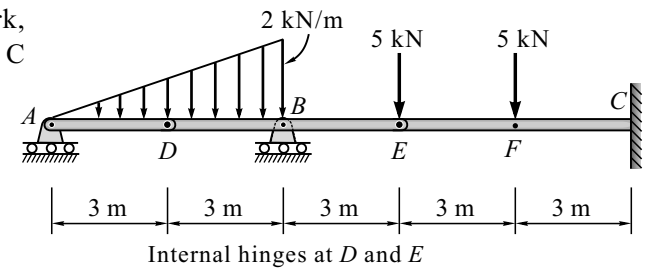

Fig. 8.E7

8. Find the reactions at the supports by using principle of virtual work, giving independent displacements in Fig. 8.E8.

[**Ans.** $V_C = 21.67$ kN (↑),
$V_D = 13.33$ kN (↑), $H_A = 0$
and $V_A = 2.5$ kN (↓)]

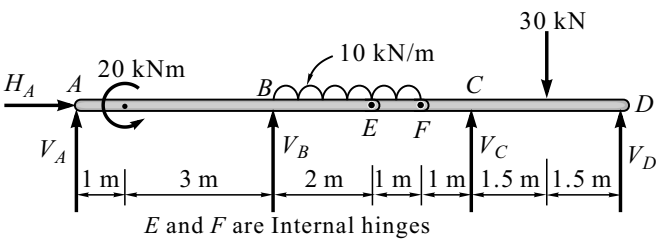

Fig. 8.E8

9. Find the reactions at supports *A* and *B* of a beam using principle of virtual work in Fig. 8.E9.

[**Ans.** $H_A = 18.68$ kN (→),
$V_B = 3.83$ kN (↑) and
$V_A = 8.43$ kN (↓)]

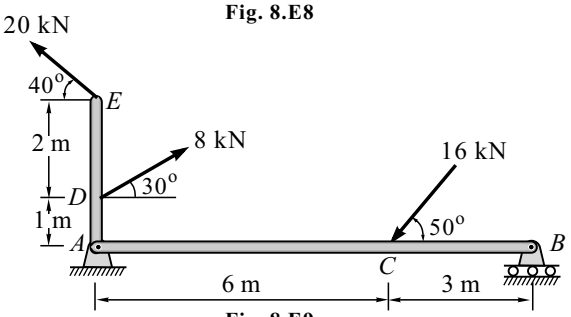

Fig. 8.E9

10. A right-angled bend *ABC* is hinged at *B*. It carries two forces as shown in Fig. 8.E10. Moment *M* is applied at the hinge to keep the bend in equilibrium. Determine the value of *M*.

[**Ans.** $M = 25$ kNm (↺)]

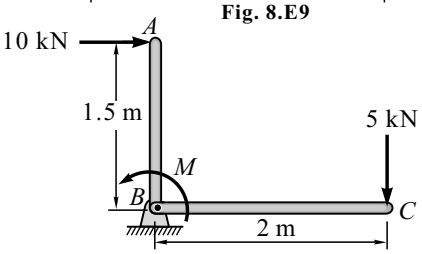

Fig. 8.E10

11. A ladder of weight W and length l is held in equilibrium by a horizontal force P as shown in Fig. 8.E11. Using virtual work method, express P in terms of W.

$\left[\textbf{Ans.}\quad P = \dfrac{W}{2}\tan\theta\right]$

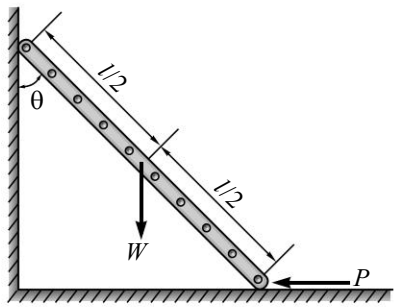

Fig. 8.E11

12. Find the value of P by virtual work method to support the weight of 800 N as shown in Fig. 8.E12.

Rod AC is weightless and $AC = 4$, $AB = 8$ m.

$\left[\textbf{Ans.}\quad P = 1039.23\text{ N}\right]$

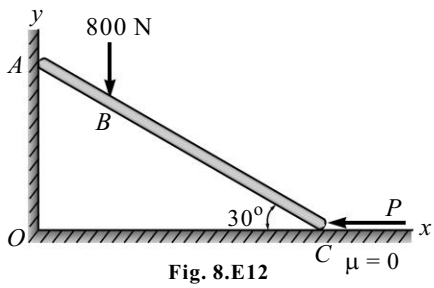

Fig. 8.E12

13. A 150 uniform ladder 4 m long supports a 500 N weight person at its top in Fig. 8.E13. Assuming the wall to be smooth, find the frictional force, which should be generated at the bottom rough surface to prevent the ladder from slipping. Use principle of virtual work only.

$\left[\textbf{Ans.}\quad F = 331.97\text{ N}\right]$

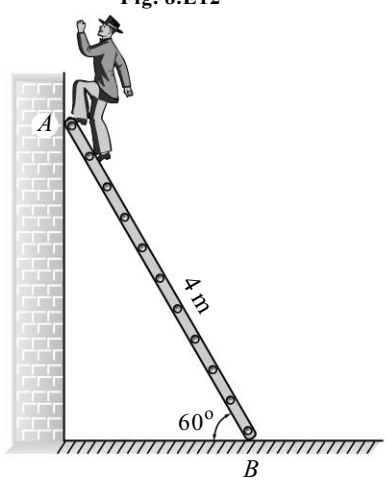

Fig. 8.E13

14. For the device shown in Fig. 8.E14, express the relationship between forces F and P in terms of θ.

$\left[\textbf{Ans.}\quad P = 2F\tan\theta\right]$

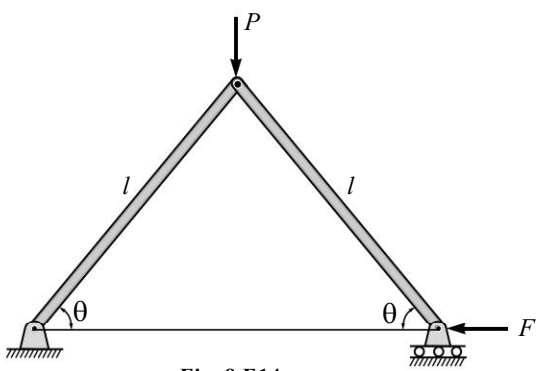

Fig. 8.E14

15. Rod AD and DB are hinged together at D as shown in Fig. 8.E15. Find the value of force P acting at B to keep the system in equilibrium. $AC = CD = DE = BE = a$ and $\theta = 40^o$. Use virtual work principle.

[***Ans.*** $P = 13.11$ kN]

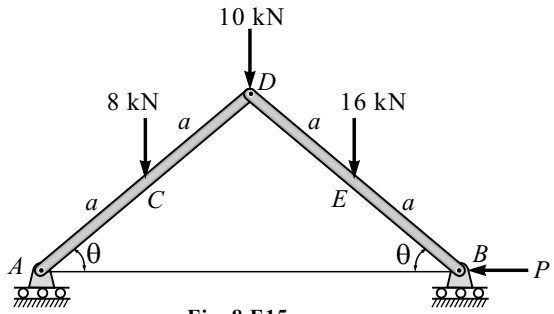

Fig. 8.E15

16. Four bars of equal length l are hinged together at their ends in the form of a rhombus as shown in Fig. 8.E16. Using principle of virtual work, find the relation between the active forces P and Q for equilibrium of the system in any configuration as defined by angle θ. Neglect the weight of the bars.

[***Ans.*** $\dfrac{P}{Q} = \tan\theta$]

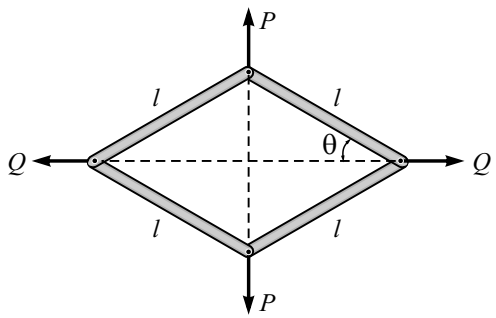

Fig. 8.E16

17. A rod AB having self-weight 5 kN is hinged at A. A 10 kN force is applied at B at right angle to the rod AB as shown in Fig. 8.E17. Find the tension in the horizontal tied at D. Take $\theta = 50^o$.

[***Ans.*** $T = 20.66$ kN]

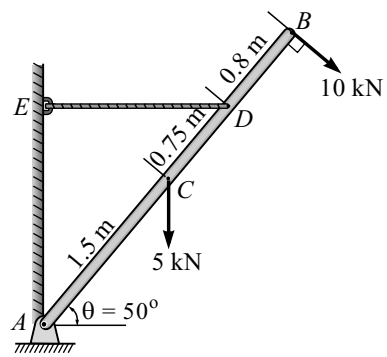

Fig. 8.E17

18. Rod AD is acted upon by a vertical force P at end A and two equal and opposite horizontal forces of magnitude Q at points B and C shown in Fig. 8.E18. Derive the expression for Q in terms of P required for equilibrium.

[***Ans.*** $Q = 3P\tan\theta$]

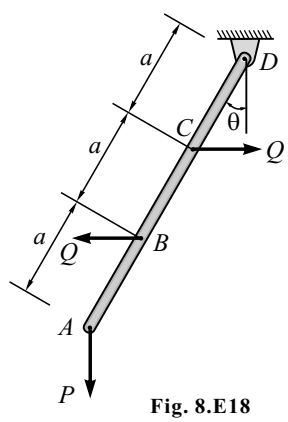

Fig. 8.E18

19. A rigid bar AB is supported by mutually perpendicular smooth surfaces OA and OB. Calculate angle ϕ defining the configuration of equilibrium of the system.

$$\left[\textbf{Ans.}\quad \tan\phi = \frac{a}{b}\tan\alpha\right]$$

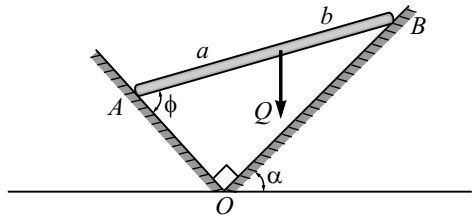

Fig. 8.E19

20. Blocks A and B each weighing 250 N are connected by a rod as shown in Fig. 8.E20. The planes are smooth. Determine horizontal force P which will keep the system in equilibrium. Use principle of virtual work.

$$\left[\textbf{Ans.}\quad P = 151.8\text{ N}\right]$$

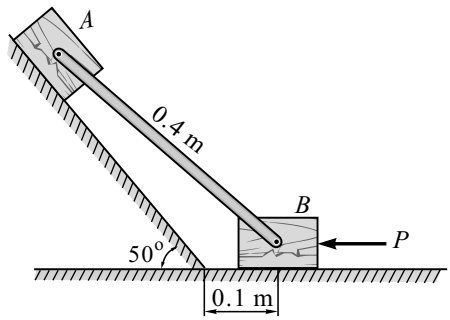

Fig. 8.E20

21. Using the principle of virtual work, find the value of the angle θ defining the configuration of equilibrium of the system shown in Fig. 8.E21. The balls D and E can slide freely along the bars AC and BC but the string DE connecting them is inextensible.

$$\left[\textbf{Ans.}\quad \tan\theta = \frac{\sqrt{3}\,Q}{P}\right]$$

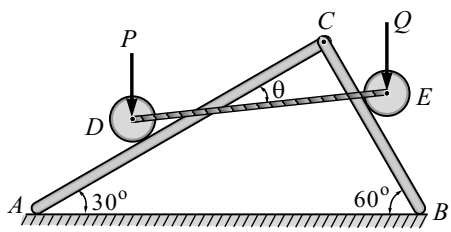

Fig. 8.E21

22. Each of the two hinged bars has a mass m and a length l, and is supported and loaded as shown in Fig. 8.E22. For a given force P determine the angle θ for equilibrium.

$$\left[\textbf{Ans.}\quad \theta = 2\tan^{-1}\left(\frac{2P}{mg}\right)\right]$$

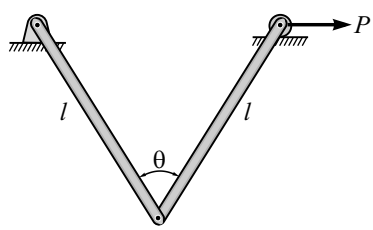

Fig. 8.E22

23. Determine the couple M required to maintain equilibrium at an angle θ shown in Fig. 8.E23. Each of the two uniform bars has a mass m and length l.

$$\left[\textbf{Ans.}\quad M = mg\,l\sin\left(\frac{\theta}{2}\right)\right]$$

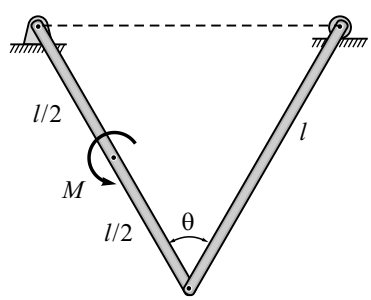

Fig. 8.E23

24. Using the method of virtual work, determine the value of F to hold the frame in equilibrium under the action of force P shown in Fig. 8.E24.

$\left[\textbf{Ans.}\quad F = \frac{P}{2}\tan\theta\right]$

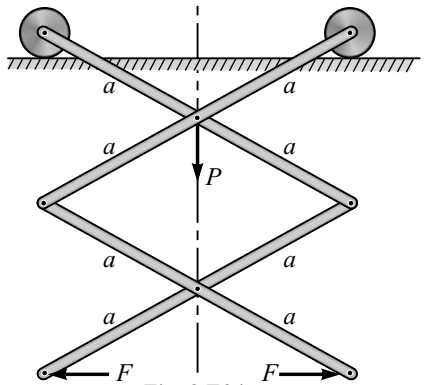

Fig. 8.E24

25. The position of member ABC is controlled by the hydraulic cylinder CD. For the loading shown in Fig. 8.E25, determine the force exerted by the cylinder on pin C when $\theta = 60^{\circ}$.

$\left[\textbf{Ans.}\quad F = 16.08\text{ kN}\right]$

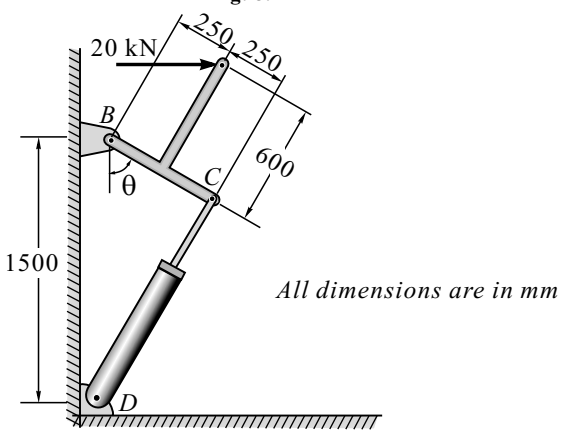

Fig. 8.E25

26. Find the horizontal and vertical components of the reactions at A and B of the frame as shown in Fig. 8.E26. The bars form three equal squares.

$\left[\textbf{Ans.}\quad H_A = 333.3\text{ N},\ V_A = 1333.3\text{ N},\ H_B = 333.3\text{ N and } V_B = 666.7\text{ N}\right]$

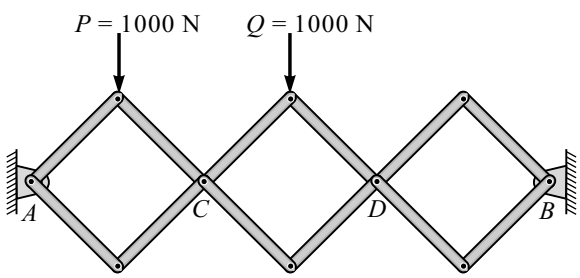

Fig. 8.E26

27. Knowing that rod AB is of length $2l$, find the relation between P and M for equilibrium shown in Fig. 8.E27.

$\left[\textbf{Ans.}\quad M = 4\,P\,l\sin 2\theta\right]$

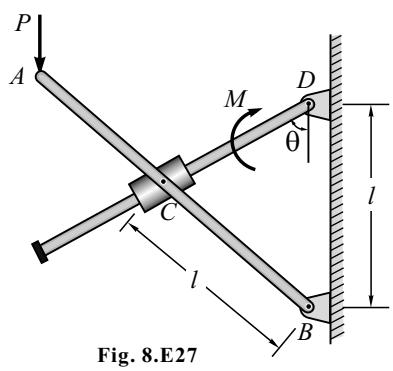

Fig. 8.E27

28. Using the principle of virtual work, determine the angle θ required to maintain equilibrium of the mechanism shown in Fig. 8.E28. Neglect the weight of the links. The spring is unstretched when $\theta = 0^o$ and it maintains a horizontal position due to the roller.

[***Ans.*** $\theta = 36.3^o$]

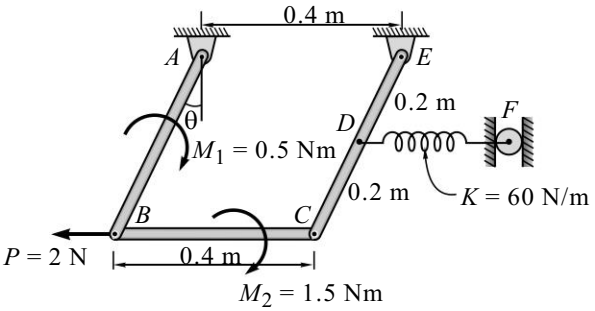

Fig. 8.E28

29. If each of the three links of the mechanism shown in Fig. 8.E29 has a weight of 20 N, determine the angle θ for equilibrium. The spring which always remains horizontal is unstretched when $\theta = 0^o$.

[***Ans.*** $\theta = 36.87^o$]

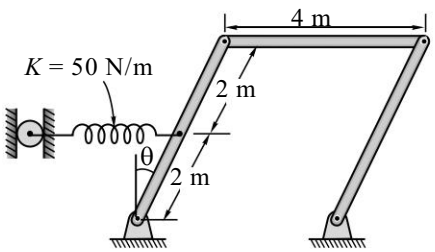

Fig. 8.E29

30. In Fig. 8.E30, the 20 kg homogeneous ladder rests on smooth surfaces. The spring is unstretched when $\theta = 0^o$. Study equilibrium conditions if spring constant $K = 50$ N/m.

[***Ans.*** $\theta = 29.4^o$]

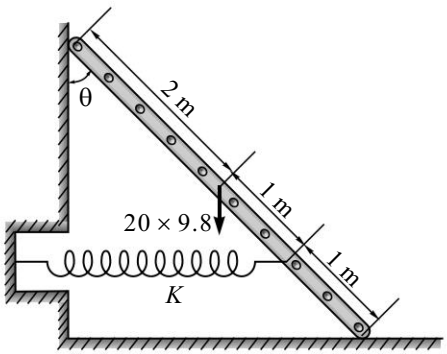

Fig. 8.E30

31. Find the expression for the angle θ and tension T in the spring corresponding to the position of equilibrium of the mechanism shown in Fig. 8.E44. The unstretched length of the spring is h and the stiffness of the spring is K.

[***Ans.*** $\theta = \sin^{-1}\left(\dfrac{P + 2Kh}{4Kl}\right)$ and $T = \dfrac{P}{2}$]

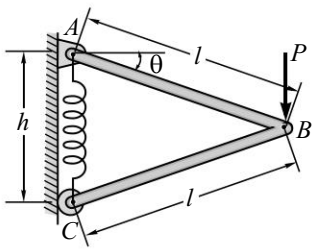

Fig. 8.E31

[II] Review Questions

1. What is meant by work done ?

2. What is meant by virtual work ?

3. Explain *work done by a force*.

4. Explain *work done by a couple*.

5. Describe the procedure of virtual work done by coordinate method.

[III] Fill in the Blanks

1. If the direction of force component and displacement is same then the work done is _____.

2. If the direction of force component and displacement is _____ then the work done is negative.

3. If the direction of force is perpendicular to direction of displacement then the work done is _____.

4. If the direction of couple and angular displacement is _____ then the work done is positive.

5. If the direction of couple and angular displacement is opposite then the work done is _____.

[IV] Multiple-choice Questions

Select the appropriate answer from the given options.

1. If angular displacement is zero then the work done by couple is _____.

(a) one Joule **(b)** one Erg **(c)** zero **(d)** one Watt

2. Work done by a force of one Newton causing a displacement of one metre in the direction of the force is one _____.

(a) Joule **(b)** Erg **(c)** Pascal **(d)** Watt

3. If the system of rigid body in equilibrium is given a small virtual (imaginary) displacement, consistent with geometrical conditions then total virtual work done by force and couple acting on system is _____.

(a) positive **(b)** equal to zero **(c)** negative **(d)** not equal to zero

4. If active forces are in the direction of virtual displacement then consider such virtual work to be _____.

(a) infinity **(b)** zero **(c)** negative **(d)** positive

CHAPTER

9

INTRODUCTION TO DYNAMICS

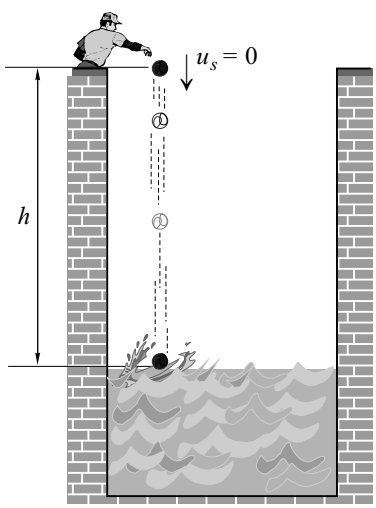

Learning Objectives

After reading this chapter, you will be able to answer the following questions:

- *What is dynamics?*
- *What is motion?*
- *What are the types of motion?*

9.1 REVISION OF MECHANICS

Before we discuss dynamics, let us revise some terms from Chapter 1 once again.

- Mechanics
- Statics
- Dynamics
- Kinematics
- Kinetics
- Newton's Law of Motion
- Particle
- Rigid body
- Space
- Time
- Mass
- Weight
- Concept of Force

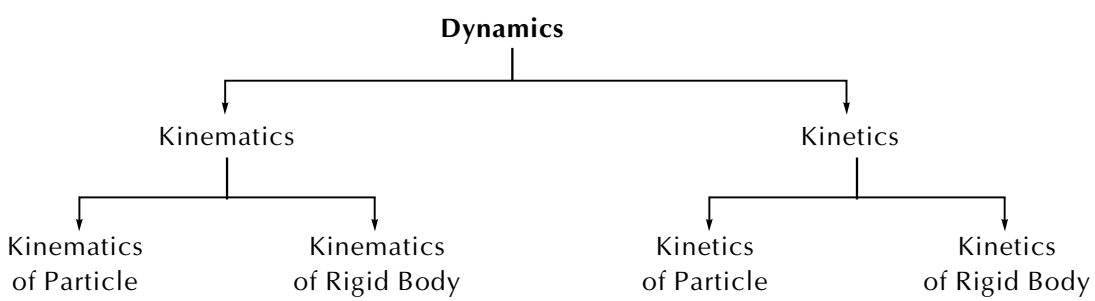

9.2 MOTION

A body is said to be in motion if it is changing its position with respect to a reference point.

A person sitting in a running train is in motion when referred to the platform but two passengers in train are at rest when referred to the train itself. So in dynamics problem any fixed point on the earth is an implied reference point. Other examples of implied reference points are centre of the Earth for the study of satellite motion, centre of the Sun for the study of motion of the solar system.

The above-said reference point w.r.t. Earth is also called *Newtonian frame of reference* or *Inertial frame of reference* or *datum*. Newton's laws are valid for such a reference frame.

In this book engineering problems have been taken only up and, hence, any fixed point on the Earth is an implied reference point while considering motion of the concerned body.

One can use three mutually perpendicular axes *x-y-z* placed at reference point called *reference axis*.

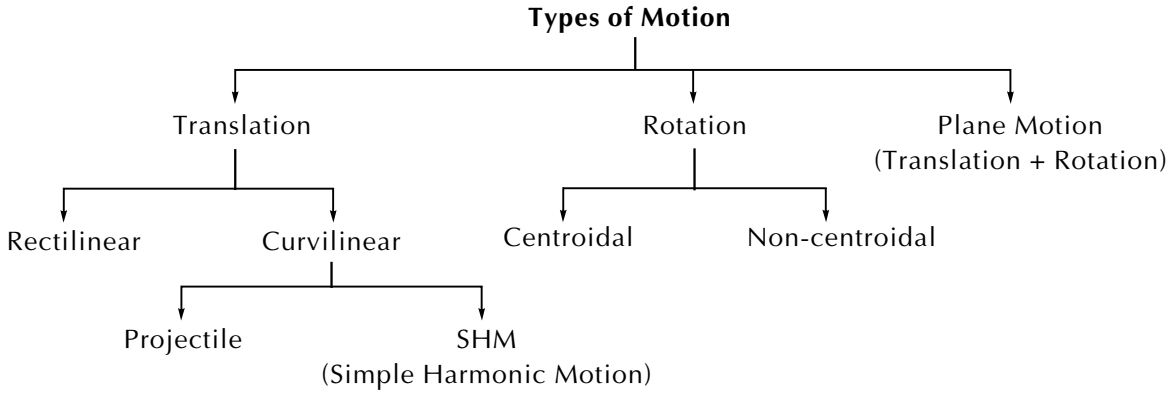

9.2.1 Translation

If a straight line drawn on the moving body remains parallel to its original position then such motion is called *translation*.

In translation we have two subtypes :

1. Rectilinear motion

2. Curvilinear motion

1. Rectilinear Motion

During translation if the path followed by a point is a **straight line** then such motion is called *rectilinear motion*. It is also called *linear motion*. Refer to Fig. 9.2-i.

Fig. 9.2-i

2. Curvilinear Motion

During translation if the path followed by a point is a **curve** then such motion is called *curvilinear motion*. Refer to Fig. 9.2-ii.

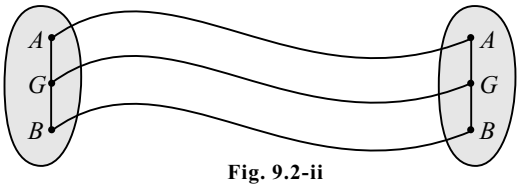

Fig. 9.2-ii

9.2.2 Rotation

If all particles of a rigid body moves in a **concentric circle** then such motion is called *rotation*. In rotation, we have two subtypes:

1. Centroidal rotation

2. Non-centroidal rotation

1. **Centroidal Rotation :** If the body is rotating about centroidal axis then it is called a *centroidal rotation*. For example, fan, motor, turbine, flywheel, etc.

2. **Non-centroidal Rotation :** If the body is rotating about non-centroidal axis then it is called a *non-centroidal rotation*. For example, pendulum bob, etc.

9.2.3 General Plane Motion

The general plane motion is a *combination of both translation and rotation*. For example, points on a wheel of moving car, ladder sliding down from its position against wall, etc.

9.2.4 Analysis of Dynamics

Problems of dynamics will have some parameters as given in the following :

- Displacement, velocity and acceleration
- The time interval
- The path followed
- The position occupied
- The active and reactive forces
- The relation between the force and the motion
- Diagrams of particles and/or rigid bodies in relation.

While analysing the problem in dynamics one should ask the following questions:

(i) Whether force and mass are considered?

Ans. If **Yes** then *kinetics.* If **No** then *kinematics.*

(ii) Whether dimensions are considered?

Ans. If **Yes** then *rigid body.* If **No** then *particle.*

(iii) Which type of motion is performed? Translation or rotation or plane motion?

Ans. **Particle** can perform only *translation motion*.

Rigid body may perform *translation* or *rotation* or *general plane motion*.

Important Steps Considered in a Solution

- Given data.
- What is to be determined?
- Necessary diagrams.
- Calculations.
- Answers and conclusions.

CHAPTER

10

KINEMATICS OF PARTICLES - I
RECTILINEAR MOTION

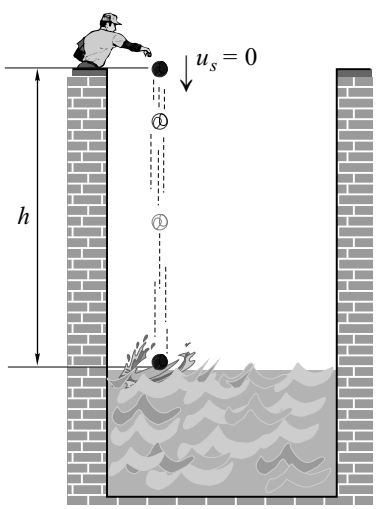

Learning Objectives

After reading this chapter, you will be able to answer the following questions :

- *What is rectilinear motion?*
- *What are the equations of motion?*
- *What are s-t curves, v-t curves, a-t curves and v-s curves?*

Kinematics of Particles *is the study of geometry of translation motion without reference to the cause of motion. Force and mass are not considered.*

In this chapter, we shall study translation motion of a particle considering its position, displacement, velocity, acceleration and time. Particle cannot have rotational or general plane motion. The two major point of chapter are rectilinear motion and curvilinear motion.

10.1 RECTILINEAR MOTION

If the particle is moving along a straight path then it is called a *rectilinear motion*. For example, a train moving on a straight track, a stone released from top of tower, etc.

1. Position

Position means the location of a particle with respect to a fixed reference point say origin O. The below sketch shows position of particle at A as $S_A = 4$ m and at B as $S_B = -3$ m.

Example

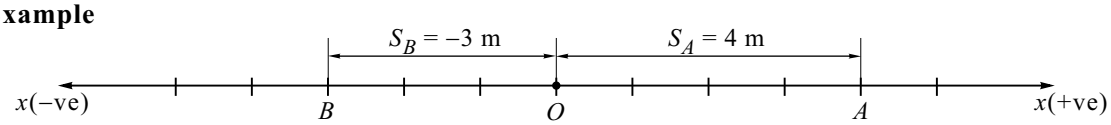

Fig. 10.1-i

2. Displacement

Displacement is a change in position of the particle. It is difference between final position and initial position. It is a vector quantity connecting the initial position to the final position.

Example

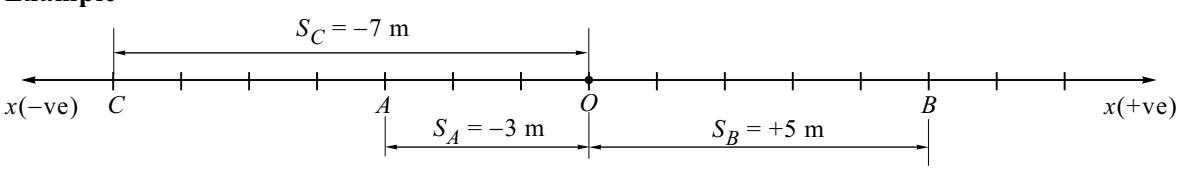

Fig. 10.1-ii

Initial position of particle is A ($S_A = -3$ m). It moves to position B ($S_B = +5$ m) and finally to position C ($S_C = -7$ m).

$\therefore$ Displacement of a particle = Final position – Initial position

$$S = S_C - S_A$$

$$S = -7 - (-3)$$

$$S = -4 \text{ m}$$

$$S = 4 \text{ m } (\leftarrow)$$

Thus, displacement depends only on initial and final position of the particle and its value may be positive or negative.

3. Distance

Distance is the total path travelled by a particle from initial position to final position. It is a scalar quantity. For example, refer to Fig. 10.1-ii,

$$d = AO + OB + BO + OC$$
$$d = 3 + 5 + 5 + 7$$
$$d = 20 \text{ m}$$

If the particle is moving along straight line in same direction then distance covered is equal to displacement.

4. Velocity

The rate of change of displacement with respect to time is called velocity. It is a vector quantity.

If s is the displacement in time t, then the average velocity

$$v = \frac{s}{t}$$

Velocity of a particle at a given instant is called as *instantaneous velocity* and is given by the limiting value of the ratio s/t at time t when both s and t are very small. Let δs be the small displacement in a small interval time δt.

The instantaneous velocity $v = \lim_{\delta t \to 0} \frac{\delta s}{\delta t}$

$$v = \frac{ds}{dt}$$

The S.I. unit of velocity is m/s.

Conversion of kilometer per hour (kmph)

$$1 \text{ kmph} = \frac{1 \times 1000}{60 \times 60} = \frac{5}{18} \text{ m/s}$$

For example, $v = 54$ kmph

$$v = 54 \times \frac{5}{18}$$
$$v = 15 \text{ m/s}$$

5. Speed

The rate of change of distance with respect to time is called speed. It is a scalar quantity. *The magnitude of velocity is also known as speed.*

Example

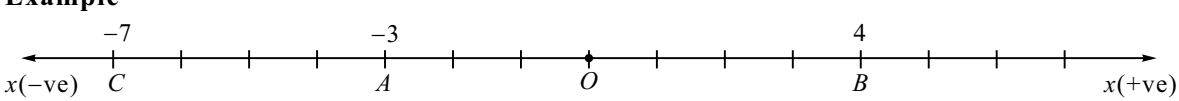

Fig. 10.1-iii

Consider a particle moving from A to B in time $t_1 = 4$ s then from B to C in time $t_2 = 6$ s. Find the average velocity and the average speed.

$$\text{Average velocity} = \frac{\text{Change in displacement}}{\text{Time interval}} = \frac{-7 - (-3)}{4 + 6} = \frac{-4}{10}$$

$$\text{Average velocity} = 0.4 \text{ m/s } (\leftarrow)$$

$$\text{Average speed} = \frac{\text{Distance travelled}}{\text{Time interval}} = \frac{3+4+4+7}{4+6} = \frac{20}{10}$$

$$\text{Average speed} = 2 \text{ m/s}$$

6. Acceleration

The rate of change of velocity with respect to time is called acceleration.

The instantaneous acceleration $a = \lim_{\delta t \to 0} \frac{\delta v}{\delta t}$

$$a = \frac{dv}{dt}$$

The S.I. unit of acceleration 'a' is m/s^2

The acceleration may be positive or negative. *Positive* acceleration is simply called *acceleration* and *negative* acceleration is called *retardation* or *deceleration*.

Positive acceleration means magnitude of velocity increases w.r.t. time and particle moves faster in positive direction. Negative acceleration means the particle moves slowly in the positive direction or moves more faster in the negative direction.

In other words, if the acceleration is in the direction of velocity then velocity increases and if the direction of acceleration is in opposite to the direction of velocity then velocity decreases.

Acceleration can also be expressed as

1. $a = \frac{dv}{dt} = \frac{d}{dt}\left(\frac{ds}{dt}\right) = \frac{d^2s}{dt^2}$

2. $a = \frac{dv}{dt} = \frac{vdv}{ds}$

10.2 EQUATIONS OF MOTION

1. Motion with Uniform (Constant) Velocity

$$\text{Displacement} = \text{Velocity} \times \text{Time}$$

$$s = v \times t$$

2. Motion with Uniform (Constant) Acceleration

Consider a particle moving with constant acceleration.

Let u be the initial velocity, v be the final velocity and t be the time interval.

Acceleration is the rate of change of velocity with respect to time.

$$a = \frac{v-u}{t}$$

$$v = u + at \qquad \text{..... (10.1)}$$

$$\text{Displacement } s = \text{Average velocity} \times \text{Time}$$

$$s = \left(\frac{u+v}{2}\right)(t) \qquad \text{..... (10.2)}$$

Substituting the value of v from Eq. (10.1) in Eq. (10.2),

$$s = \left(\frac{u+u+at}{2}\right) \times t$$

$$s = ut + \frac{1}{2}at^2 \qquad \text{..... (10.3)}$$

From Eq. (10.1),

$$t = \frac{v-u}{a}$$

Substituting the value in Eq. (10.2) we get

$$s = \left(\frac{u+v}{2}\right)\left(\frac{v-u}{a}\right)$$

$$s = \frac{v^2-u^2}{2a}$$

$$v^2 = u^2 + 2as \qquad \text{..... (10.4)}$$

Thus, equations of motion of a particle moving with a constant acceleration are

$$v = u + at$$

$$s = ut + \frac{1}{2}at^2$$

$$v^2 = u^2 + 2as$$

3. Motion with Variable Acceleration

If the rate of change of velocity is not uniform then it is called *variable acceleration motion*.

When the variation of acceleration or velocity or displacement with respect to time is known, we can solve such problems by differentiation or by integration with boundary conditions

$$a = \frac{dv}{dt} = v\frac{dv}{ds}\ ;\quad v = \frac{ds}{dt}$$

4. Vertical Motion Under Gravity

This is the special case of motion with uniform acceleration.

Equations of motion of a particle moving under gravity are

$$v = u + gt$$

$$h = ut + \frac{1}{2}gt^2$$

$$v^2 = u^2 + 2gh$$

where $g = 9.81\ \text{m/s}^2\ (\downarrow)$ and $g = -9.81\ \text{m/s}^2\ (\uparrow)$.

5. Motion Along an Inclined Plane Under Gravity

If a block is sliding by its own weight on a frictionless inclined plane then its constant acceleration is given as

$$a = g\sin\theta$$

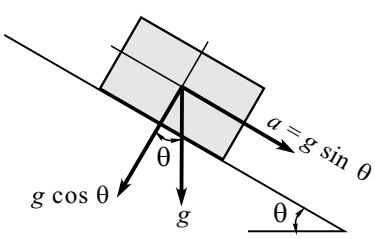

Fig. 10.2-i

10.3 SIGN CONVENTION

- The kinematics quantities such as displacement, velocity and acceleration are vector quantities.
- Therefore, we should use the proper sign convention while solving the problems.
- We shall consider the initial direction of motion as positive sign for displacement, velocity and acceleration.
- But retardation will be negative in initial direction of motion.

Example 1
A ball is thrown vertically up.
Sign Convention

- Initial direction of motion is upwards (↑).
- Therefore, upward direction (↑) will be positive.
- Velocity in upward direction (↑) will be positive.
- Displacement in upward direction (↑) will be positive.
- Acceleration due to gravity in upward direction (↑) (retardation) will be negative (i.e., $g = -9.81$ m/s^2).

Example 2
A ball is thrown vertically down.
Sign Convention

- Initial direction of motion is downwards (↓).
- Therefore, downward direction (↓) will be positive.
- Velocity in downward direction (↓) will be positive.
- Displacement in downward direction (↓) will be positive.
- Acceleration due to gravity in downward direction (↓) will be positive (i.e., $g = 9.81$ m/s^2).

Example 3
A car starting from rest moves towards right.
Sign Convention

- Initial direction of motion is towards right (→).
- Therefore, all kinematic quantities, direction towards right (→) will be positive but retardation will be negative.

Example 4
A car starting from rest moves towards left.
Sign Convention

- Initial direction of motion is towards left (←).
- Therefore, all kinematic quantities, direction toward left (←) will be positive but retardation will be negative.

10.4 Motion Curves

Motion curves are the graphical representation of displacement, velocity and acceleration with time.

1. Displacement-Time Curve (*s-t* curve)

In a displacement-time curve, time is plotted along x-axis (abscissa) and displacement is plotted along y-axis (ordinate).

The velocity of particle at any instant of time t is the slope of s-t curve at that instant.

$$v = \frac{ds}{dt} \text{ (slope)}$$

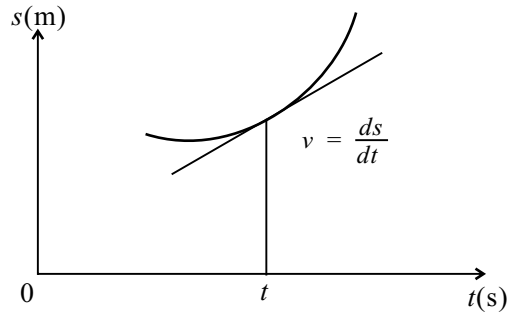

2. Velocity-Time Curve (*v-t* curve)

In a velocity-time curve, time is plotted along x-axis (abscissa) and velocity is plotted along y-axis (ordinate).

(a) The acceleration of a particle at any instant of time t is the slope of v-t diagram at that instant.

$$a = \frac{dv}{dt} \text{ (slope)}$$

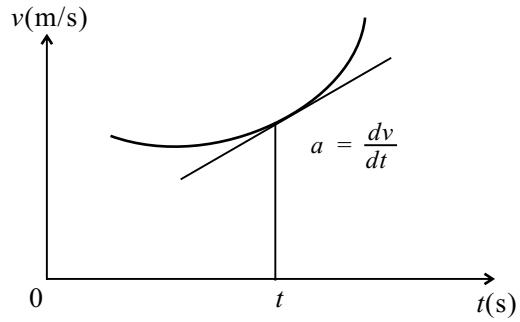

(b) Let the particles position be s_1 at time t_1 and s_2 at time t_2. From v-t curve, we have

Area of the elemental strip $= vdt$

$\therefore \int_{t_1}^{t_2} vdt$ represents the entire area under v-t curve between time t_1 and t_2.

$\therefore \int_{s_1}^{s_2} ds = \int_{t_1}^{t_2} vdt$

$\therefore s_2 - s_1 =$ Area under v-t curve

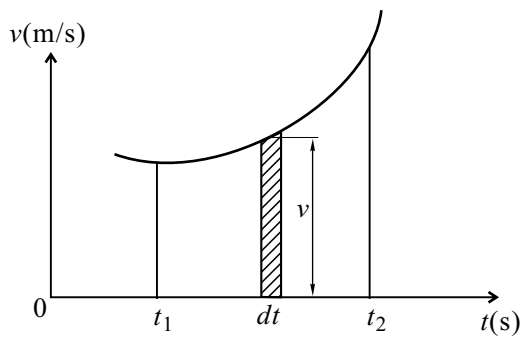

$\therefore$ Change in displacement = Area under v-t curve

Thus, change in displacement of a particle in given interval of time is equal to area under v-t curve during the same interval of time.

3. Acceleration-Time Curve (*a-t* curve)

(a) In an acceleration-time curve, time is plotted along x-axis (abscissa) and acceleration is plotted along y-axis (ordinate).

The slope of a-t curve is the jerk.

$$\text{Jerk} = \frac{da}{dt} \text{ (slope)}$$

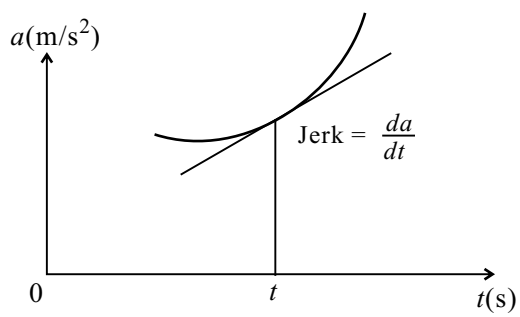

(ii) Let the particle velocity be v_1 at time t_1 and v_2 at time t_2. From a-t curve, we have

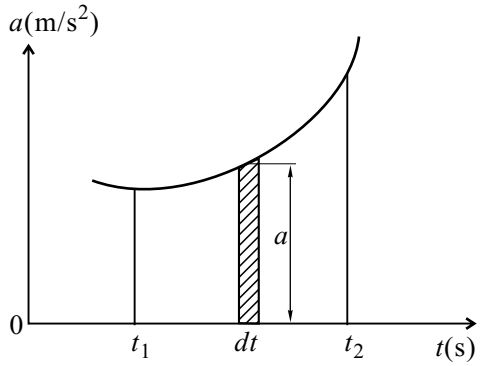

Area of the elemental strip $= adt$

$\therefore \int_{t_1}^{t_2} adt$ represents the entire area under a-t curve between time t_1 and t_2.

$$\therefore \int_{v_1}^{v_2} dv = \int_{t_1}^{t_2} adt$$

$\therefore$ $v_2 - v_1$ = Area under a-t curve

$\therefore$ Change in velocity = Area under a-t curve

Thus, change in velocity of a particle in a given interval of time is equal to area under a-t curve during the same interval of time.

(iii) For finding displacement, use moment-area method.

At time t_1 particle position and velocity is s_1 and v_1, respectively.

At time t_2 particle position and velocity is s_2 and v_2, respectively.

At time t_3 particle position and velocity is s_3 and v_3, respectively.

So on and so forth.

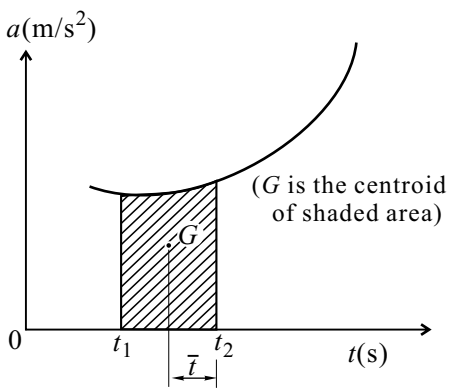

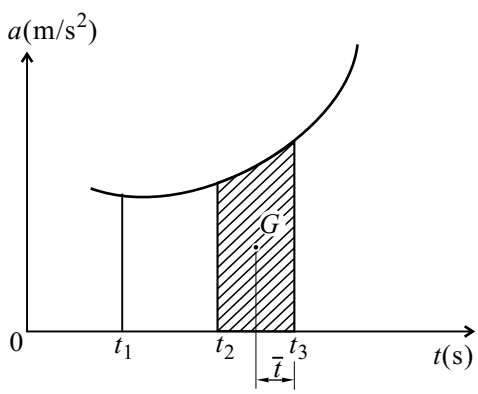

.....

$s_2 - s_1 = v_1 (t_2 - t_1)$ + (Area under a-t curve between t_1 and t_2) ($\bar{t}$)

$s_3 - s_2 = v_2 (t_3 - t_2)$ + (Area under a-t curve between t_2 and t_3) ($\bar{t}$)

So on and so forth.

4. Velocity-Displacement Curve (v-s curve)

In a velocity-displacement curve, displacement is plotted along x-axis (abscissa) and velocity is plotted along y-axis (ordinate).

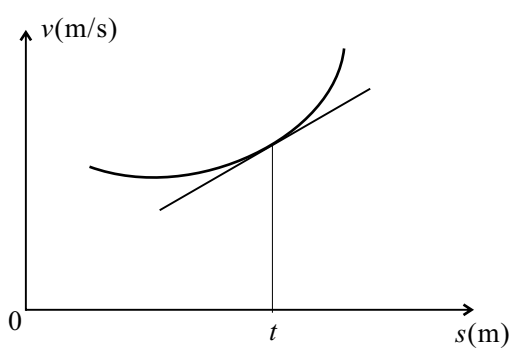

From v-s curve, we have

Slope $= \dfrac{dv}{ds}$

We know, $a = v \dfrac{dv}{ds}$

$\therefore$ $a = (v)$ (Slope of v-s curve)

10.4.1 Important Relations of Motion Curve

1. If the acceleration is a polynomial of degree n, the degree of velocity is $(n + 1)$ and the degree of displacement is $(n + 2)$.
2. If the equation of displacement is given, then to find the velocity, displacement is differentiated w.r.t. time and to find acceleration, velocity is differentiated w.r.t. time.
3. If the equation of acceleration is given, then to find the velocity, integrate acceleration w.r.t. time and to find displacement, integrate velocity w.r.t. time. The sufficient conditions required to find the constants of integration will be given in the problem. If not mentioned then we can assume that the particle starts from rest from the origin.

Uniform Velocity Motion Curve	Uniform Acceleration Motion Curve	Variable Acceleration Motion Curve
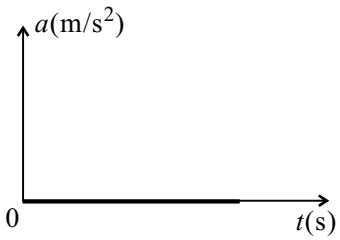 **Zero acceleration**	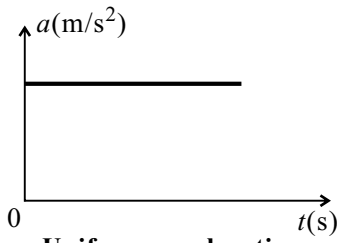 **Uniform acceleration degree = 0**	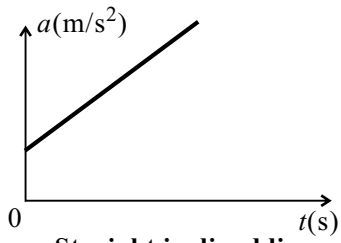 **Straight inclined line degree = 1**
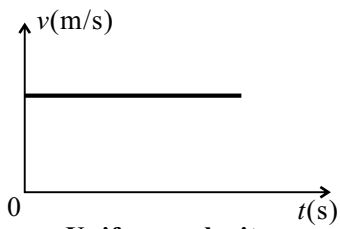 **Uniform velocity**	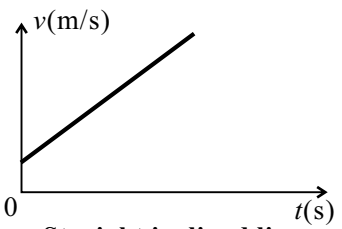 **Straight inclined line degree = 1**	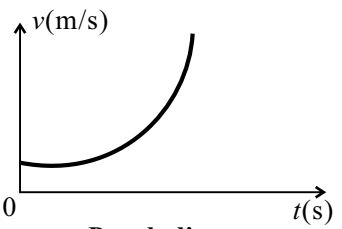 **Parabolic curve degree = 2**
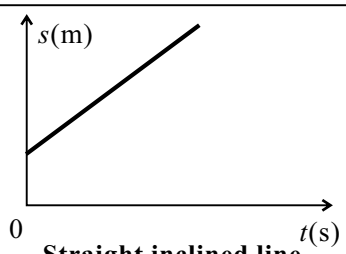 **Straight inclined line degree = 1**	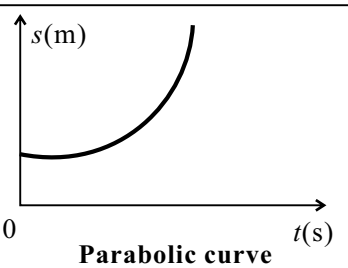 **Parabolic curve degree = 2**	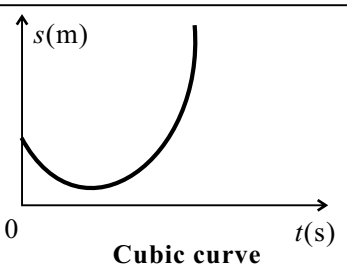 **Cubic curve degree = 3**

Area bounded by curve

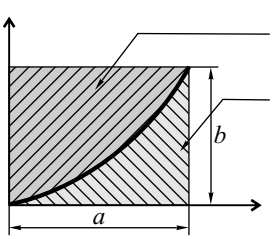

$$A_1 = \frac{nab}{n+1}$$

$$A_2 = \frac{ab}{n+1}$$

$A = A_1 + A_2 = ab$

n = Curve of degree of polynomial

Solved Problems [Rectilinear Motion with Uniform (Constant) Acceleration and Uniform (Constant) Velocity]

Problem 1

A particle starts moving along a straight line with initial velocity of 25 m/s, from O under a uniform acceleration of -2.5 m/s^2. Determine

(i) velocity, displacement and the distance travelled at $t = 5$ seconds,

(ii) how long the particle moves in the same direction? What are its velocity, displacement and distance covered then?

(iii) the instantaneous velocity, displacement and the distance covered at $t = 15$ seconds,

(iv) the time required to come back to O, velocity displacement and distance covered then and

(v) instantaneous velocity, displacement and distance covered at $t = 25$ seconds.

Solution

Given: $u = 25$ m/s, $a = -2.5$ m/s^2, O is the origin.

(i) $t = 5$ s. Refer to Fig. 10.1(a)

$v = u + at$

$v = 25 + (-2.5) \times 5$

$v = 12.5$ m/s $(\rightarrow)$

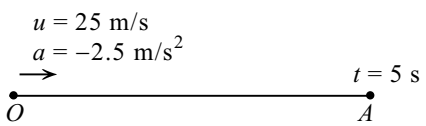

Fig. 10.1(a)

Now, $s = ut + \frac{1}{2}at^2$

$s = 25 \times 5 + \frac{1}{2} \times (-2.5) \times 5^2$

$s = 93.75$ m $(\rightarrow)$

Since velocity is positive, the particle is moving in the same direction and therefore displacement is equal to the distance travelled.

$\therefore \quad d = s = 93.75$ m.

(ii) The particle moves in same direction till it comes to rest because of negative acceleration and then its direction will reverse.

At the above said instant velocity of particle will be zero

$v = 0$ (Point of reversal)

Let t be the time taken by the particle to move in same direction [Refer to Fig. 10.1(b)], we have

Fig. 10.1(b)

$v = u + at$

$0 = 25 + (-2.5)t$

$t = 10$ s

For displacement, we have

$s = ut + \frac{1}{2}at^2$

$s = 25 \times 10 + \frac{1}{2} \times (-2.5) \times 5^2$

$s = 218.75$ m $(\rightarrow)$

As particle has not reversed its direction, we have

Displacement = Distance travelled

$s = d = 218.75$ m.

(iii) $t = 15$ s. Refer to Fig. 10.1(c).

$v = u + at$

$v = 25 + (-2.5) \times 15 = -12.5$ m/s

$v = 12.5$ m/s $(\leftarrow)$

Now, $s = ut + \frac{1}{2}at^2$

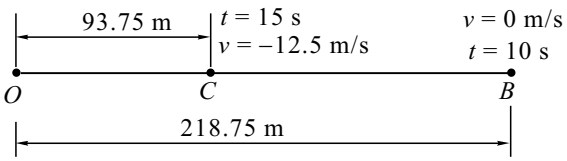

Fig. 10.1(c)

$s = 25 \times 15 + \frac{1}{2} \times (-2.5) \times 15^2 = 93.75$ m $(\rightarrow)$

Particle is moving from O to B and then from B to C in $t = 15$ s.

$\therefore$ Distance travelled $d = OB + BC$ $(BC = OB - OC)$

$d = 218.75 + (218.75 - 93.75)$

$d = 343.75$ m

(iv) Let t be the time taken by particle to reach origin. Refer to Fig. 10.1(d).

$\therefore$ Displacement = 0

$s = ut + \frac{1}{2}at^2$

$0 = 25 \times t + \frac{1}{2} \times (-2.5) \times t^2$

$t = 20$ s

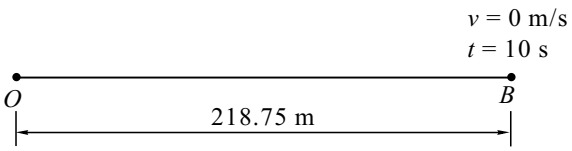

Fig. 10.1(d)

$v = u + at$

$v = 25 + (-2.5) \times 20 = -25$ m/s

$v = 25$ m/s $(\leftarrow)$

Distance covered $d = OB + BO = 218.75 + 218.75$

$d = 437.5$ m

(v) At $t = 25$ s. Refer to Fig. 10.1(e).

$v = u + at$

$v = 25 + (-2.5) \times 25$

$v = -37.5$ m/s

$v = 37.5$ m/s $(\leftarrow)$

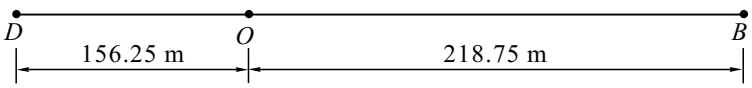

Fig. 10.1(e)

Now, $s = ut + \frac{1}{2}at^2$

$s = 25 \times 25 + \frac{1}{2} \times (-2.5) \times 25^2 = -156.25$ m

$s = 156.25$ m $(\leftarrow)$

Distance covered $d = OB + BO + OD = 218.75 + 218.75 + 156.25$

$d = 593.75$ m

Problem 2

A particle travels along a straight line path such that in 4 seconds it moves from an initial position $S_A = -8$ m to position $S_B = +3$ m. Then in another 5 seconds it moves from S_B to $S_C = -6$ m. Determine the particle's average velocity and average speed during 9 second interval.

Solution

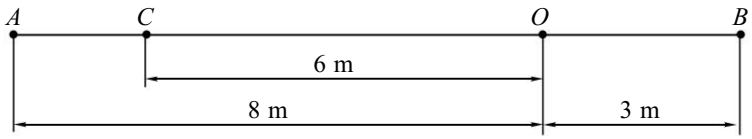

Fig. 10.2

(i) $$\text{Average velocity} = \frac{\text{Final displacement} - \text{Initial displacement}}{\text{Time interval}}$$

$$\text{Average velocity} = \frac{-6-(-8)}{9} = \frac{2}{9}$$

$$v_{\text{ave}} = 0.2222 \text{ m/s}$$

(ii) $$\text{Average speed} = \frac{\text{Total distance travelled}}{\text{Time interval}}$$

$$\text{Average velocity} = \frac{AO + OB + BO + OC}{\text{Time interval}} = \frac{8+3+3+6}{9} = \frac{20}{9}$$

$$\text{Average speed} = 2.222 \text{ m/s}$$

Problem 3

A motorist is travelling at 90 kmph, when he observes a traffic light 250 m ahead of him turns red. The traffic light is timed to stay red for 12 s. If the motorist wishes to pass the light without stopping, just as it turns green. Determine **(i)** the required uniform deceleration of the motor and **(ii)** the speed of the motor as it passes the traffic light.

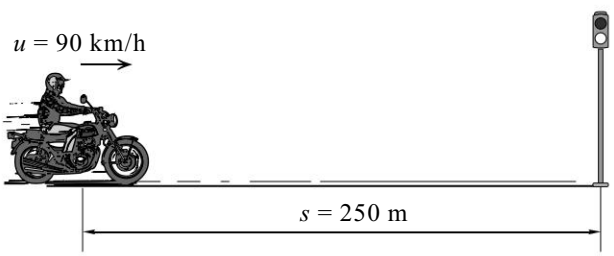

Fig. 10.3

Solution

Given: Initial velocity $u = 90$ km/h $\therefore\ u = \frac{90 \times 5}{18} = 25$ m/s, Time $t = 12$ s and Displacement $s = 250$ m.

(i) $$s = ut + \frac{1}{2}at^2$$

$$250 = 25 \times 12 + \frac{1}{2} \times a \times 12^2$$

$$a = -0.6944 \text{ m/s}^2 \qquad \text{(Negative sign indicates deceleration)}$$

(ii) $$v = u + at$$

$$v = 25 + (-0.6944) \times 12 = 16.67 \text{ m/s } (\rightarrow) \qquad \therefore\ v = 16.67 \times \frac{18}{5}$$

$$v = 60 \text{ kmph} \qquad \text{(The speed of the motor cycle as it passes the traffic light)}$$

Problem 4

Determine the time required for a car to travel 1 km along a road if the car starts from rest, reaches a maximum speed at some intermediate point, and then stops at the end of the road. The car can accelerate or decelerate at 1.5 m/s^2.

Solution

Method I : By using equation of motion

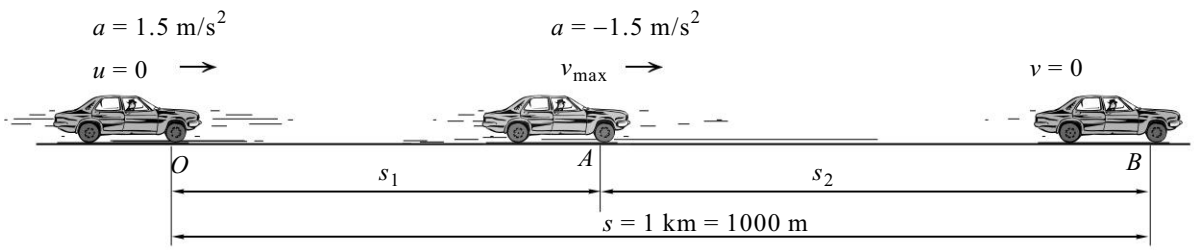

Fig. 10.4(a)

(i) Consider the motion of car from O to A [Refer to Fig. 10.4(a)].

Initial velocity $u = 0$; Final velocity $v = v_{max}$;

Acceleration $a = 1.5$ m/s^2 ; Time $t = t_1$;

Displacement $s = s_1$;

$$v = u + at$$

$$v_{max} = 0 + 1.5 \times t_1 \qquad \therefore \; t_1 = \frac{v_{max}}{1.5}$$

$$s = ut + \frac{1}{2}at^2$$

$$s_1 = (0)(t_1) + \frac{1}{2} \times 1.5 \times t_1^2$$

$$s_1 = 0.75\left(\frac{v_{max}}{1.5}\right)^2$$

(ii) Consider the motion of car from A to B.

Initial velocity $u = v_{max}$; Final velocity $v = 0$;

Acceleration $a = -1.5$ m/s^2 ; Time $t = t_2$;

Displacement $s = s_2$;

$$v = u + at$$

$$0 = v_{max} + (-1.5) \times t_2 \quad \therefore \; t_2 = \frac{v_{max}}{1.5}$$

$$s = ut + \frac{1}{2}at^2$$

$$s_2 = v_{max}\left(\frac{v_{max}}{1.5}\right) + \frac{1}{2} \times (-1.5)\left(\frac{v_{max}}{1.5}\right)^2$$

$$s_2 = v_{max}\left(\frac{v_{max}}{1.5}\right) - 0.75\left(\frac{v_{max}}{1.5}\right)^2$$

(iii) Total displacement $s = s_1 + s_2$

$$1000 = 0.75\left(\frac{v_{max}}{1.5}\right)^2 + \left[\frac{v_{max}^2}{1.5} - 0.75\left(\frac{v_{max}}{1.5}\right)^2\right]$$

$$1000 = \frac{v_{max}^2}{1.5}$$

$$v_{max} = 38.73 \text{ m/s}$$

(iv) Total time $t = t_1 + t_2$

$$t = \frac{v_{max}}{1.5} + \frac{v_{max}}{1.5}$$

$$t = \frac{38.73}{1.5} + \frac{38.73}{1.5}$$

$$t = 51.64 \text{ s}$$

Method II : By using *v-t* diagram

(i) Consider the *v-t* diagram shown in Fig. 10.4(b).

Since the magnitude of acceleration is same, therefore, the slope is same.

$\therefore\ t_1 = t_2 \qquad \therefore\ t = 2t_1$

Slope = Acceleration = $1.5 = \dfrac{v_{max}}{t_1}$

$\therefore\ v_{max} = 1.5t_1$ .....(I)

Area under *v-t* diagram is displacement

$\therefore\ 1000 = \dfrac{1}{2} \times 2t_1 \times v_{max}$

$v_{max} = \dfrac{1000}{t_1}$ .....(II)

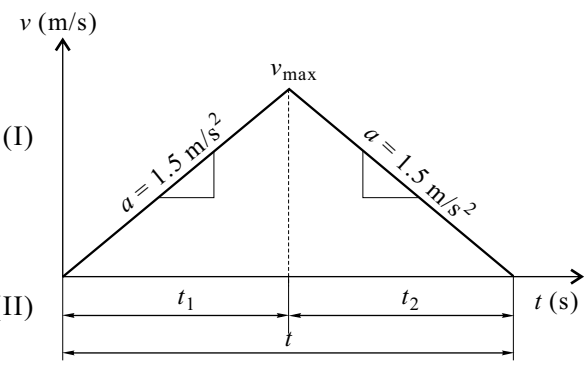

Fig. 10.4(b)

(ii) Equating Eqs. (I) and (II),

$$1.5t_1 = \frac{1000}{t_1}$$

$$t_1 = 25.82 \text{ s}$$

$\therefore\ t = 2 \times t_1 = 51.64$ s

$$v_{max} = 1.5 \times 25.82$$

$$v_{max} = 38.73 \text{ m/s}$$

Problem 5

In Asian games, for a 100 m event an athlete accelerates uniformly from the start to his maximum velocity in a distance of 4 m and runs the remaining distance with that velocity. If the athlete finishes the race in 10.4 s, determine **(i)** his initial acceleration, and **(ii)** his maximum velocity.

Solution

Method I : By using equation of motion

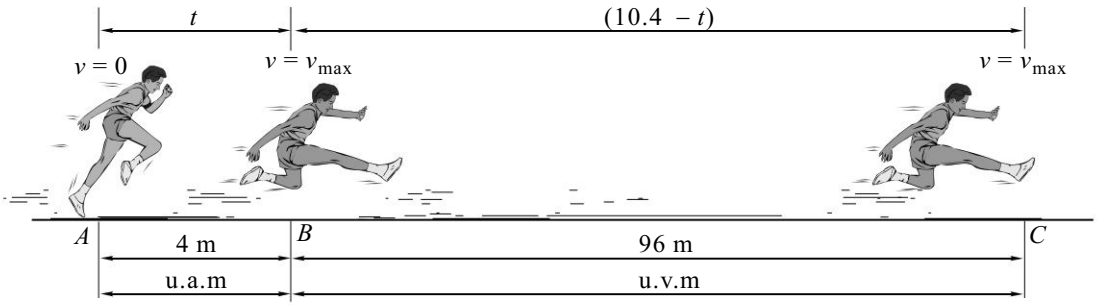

Fig. 10.5(a)

(i) Consider the uniform acceleration motion from A to B [Refer to Fig. 10.5(a)].

Initial velocity $u = 0$; Final velocity $v = v_{max}$; Displacement $s = 4$ m ;

Acceleration $a = ?$; Time $t = ?$

$v = u + at$

$v_{max} = 0 + at = at$ ..... (I)

$s = ut + \frac{1}{2}at^2 \Rightarrow 4 = 0 + \frac{1}{2}at^2 \Rightarrow 8 = (at)t$

$8 = (v_{max})t \therefore v_{max} = \frac{8}{t}$ ..... (II)

(ii) Consider the uniform velocity motion from B to C.

Velocity $= v_{max}$; Time $= (10.4 - t)$

Displacement = Velocity × Time

$96 = v_{max}(10.4 - t)$

Substituting $v_{max} = \frac{8}{t}$ from Eq. (II), we get $96 = \frac{8}{t}(10.4 - t)$

$\therefore 96t = 8 \times 10.4 - 8t \Rightarrow 104t = 8 \times 10.4 \quad \therefore t = 0.8$ s

(iii) From Eq. (II),

$v_{max} = \frac{8}{t} = \frac{8}{0.8} \qquad \therefore v_{max} = 10$ m/s

(iv) From Eq. (I), $v_{max} = at$

$a = \frac{v_{max}}{t} = \frac{10}{0.8} \qquad \therefore a = 12$ m/s^2

Method II : By using *v-t* diagram

Consider the v-t diagram shown in Fig. 10.5(b).

(i) Let t be the time taken by athlete to attain maximum velocity (v_{max}) in a distance of 4 m.

$\therefore$ Time taken for remaining distance 96 m will be $(10.4 - t)$.

Area under v-t diagram is displacement, so we have

$$4 = \frac{1}{2} \times t \times v_{max} \quad \text{and} \quad 96 = v_{max}(10.4 - t)$$

$$\therefore \; v_{max} = \frac{8}{t} \qquad \text{and} \qquad v_{max} = \frac{96}{10.4 - t}$$

Equating v_{max}, we have

$$\therefore \; \frac{8}{t} = \frac{96}{10.4 - t} \qquad \therefore \; t = 0.8 \text{ s}$$

(ii) $v_{max} = \frac{8}{t} = \frac{8}{0.8} = 10$ m/s

(iii) **Acceleration = Slope of v-t diagram**

$$a = \frac{v_{max}}{t} = \frac{10}{0.8} \qquad \therefore \; a = 12.5 \text{ m/s}^2$$

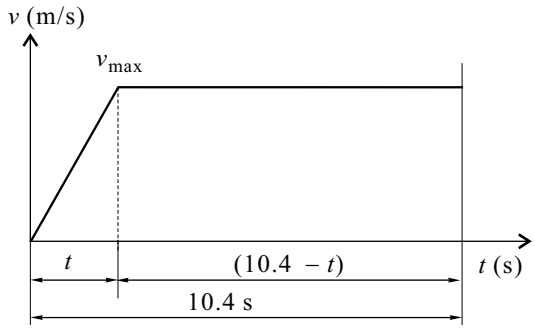

Fig. 10.5(b)

Problem 6

A radar equipped police car observes a truck travelling at 110 kmph. The police car starts pursuit 30 s after the observation, accelerates to 160 kmph in 20 s. Assuming the speeds are maintained constant on a straight road, how far from the observation point, will the chase end?

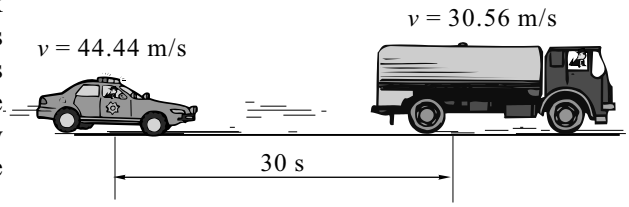

Fig. 10.6(a)

Solution

Observe the v-t diagram of truck and police car shown in Fig. 10.6(b) and (c).

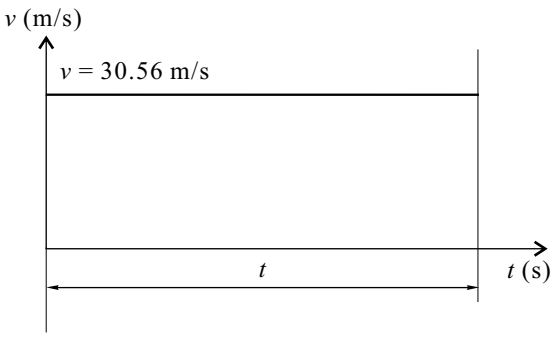

Fig. 10.6(b) : Truck

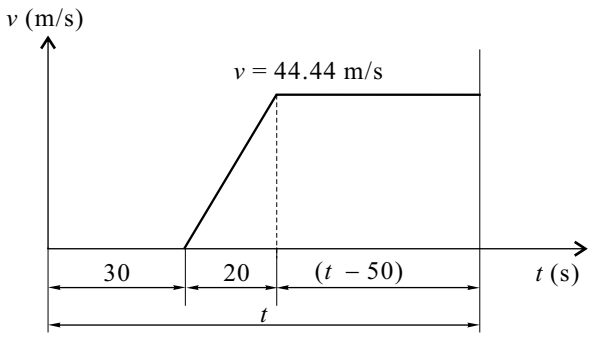

Fig. 10.6(c) : Police car

Let t be the time interval from the observation point to the point where chase ends.

Distance covered by truck and police car will be same. We know, area under v-t diagram is distance covered.

Area under v-t diagram of truck = Area under v-t diagram of police car

$$(30.56)(t) = \frac{1}{2} \times 20 \times 44.44 + 44.44\,(t - 50)$$

$\therefore \; t = 128.07$ s

$\therefore$ Distance covered $= 30.56 \times 128.07$

$s = 3913.82$ m

Problem 7

A train travelling with a speed of 90 kmph slows down on account of work in progress, at a retardation of 1.8 kmph/s to 36 kmph. With this, it travels 600 m. Thereafter, it gains further speed with 0.9 kmph per second till getting the original speed. Find the delay caused.

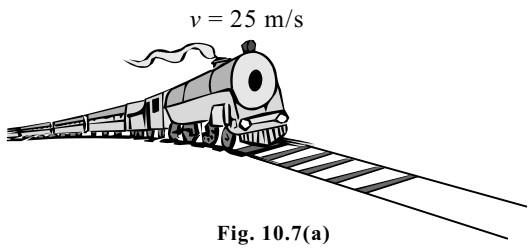

Fig. 10.7(a)

Solution

Observe the v-t diagram of train shown in Fig. 10.7(b).

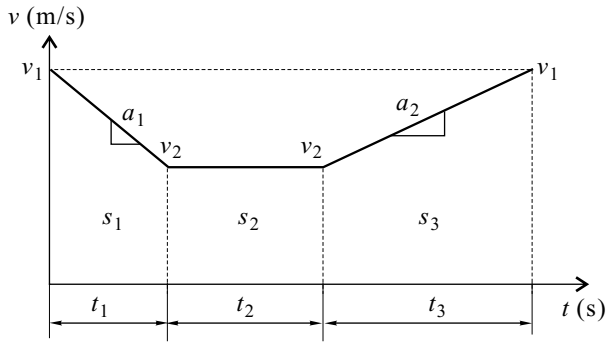

Fig. 10.7(b)

(i) *Given* : $v_1 = 90 \times \frac{5}{18} = 25$ m/s

$a_1 = 1.8 \times \frac{5}{18} = 0.5$ m/s^2

$v_2 = 36 \times \frac{5}{18} = 10$ m/s

$a_2 = 0.9 \times \frac{5}{18} = 0.25$ m/s^2

$s_2 = 600$ m

(ii) First phase of motion (constant acceleration)

$v = u + at$

$v_2 = v_1 + a_1 t_1$

$10 = 25 + (-0.5) \times t_1 \qquad \therefore\ t_1 = 30$ s

Distance covered = Area under v-t diagram

$s_1 = \frac{1}{2}(v_1 + v_2)\, t_1 = \frac{1}{2}(25 + 10)\, 30 \qquad \therefore\ s_1 = 525$ m

(iii) Second phase of motion (constant velocity)

$s_2 = v_2 \times t_2$

$600 = 10 \times t_2 \qquad \therefore\ t_2 = 60$ s

(iv) Third phase of motion (constant acceleration)

$v_1 = v_2 + a_2 t_3$

$25 = 10 + (0.25) \times t_3 \qquad \therefore\ t_3 = 60$ s

Distance covered = Area under v-t diagram

$s_3 = \frac{1}{2}(v_2 + v_1)\, t_3 = \frac{1}{2}(10 + 25)\, 60$

$\therefore\ s_3 = 1050$ m

(v) Total distance covered = $s_1 + s_2 + s_3$

$d = 525 + 600 + 1050 \qquad \therefore\ d = 2175$ m

(vi) Total time taken = $t_1 + t_2 + t_3$

$t = 30 + 60 + 60 \qquad \therefore\ t = 150$ s

(vii) If there would have been no '*work in progress*', the speed would have been constant.

$v_1 = 25$ m/s

$\therefore$ Time required to travel would have been

$$t' = \frac{\text{Distance}}{\text{Speed}} = \frac{2175}{25}$$

$t' = 87$ s

(viii) The delay caused = $t - t' = 150 - 87 = 63$ s

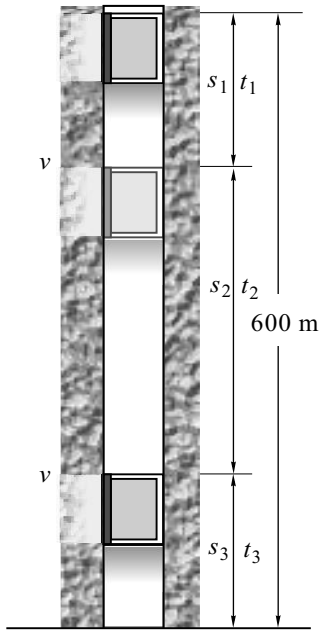

Fig. 10.8(a)

Problem 8

An elevator goes down a 600 m deep mine shaft in 60 s. For the first quarter of distance, only the speed is being uniformly accelerated and during the last quarter it is uniformly retarded, the acceleration and retardation being equal. Find the uniform speed of the elevator while travelling central portion of shaft.

Solution

(i) Observe the *v-t* diagram of the elevator shown in Fig. 10.8(b).

As per given condition in problem, we have

Distance travelled in first quarter = Distance travelled in last quarter

$$s_1 = s_3 = \frac{600}{4} = 150 \text{ m}$$

$\therefore s_2 = 300$ m

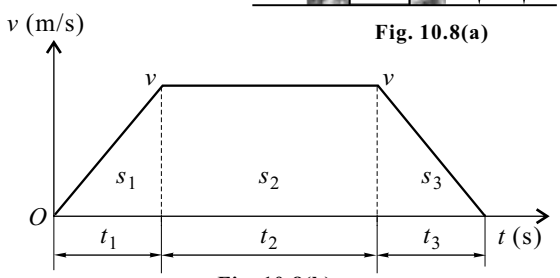

Fig. 10.8(b)

(ii) From *v-t* diagram, we have

Distance = Area under *v-t* diagram

$$s_1 = \frac{1}{2} \times t_1 \times v \quad ; \quad s_2 = v \times t_2 \quad ; \quad s_3 = \frac{1}{2} \times t_3 \times v$$

$$150 = \frac{vt_1}{2} \quad ; \quad s_2 = vt_2 \quad ; \quad 150 = \frac{vt_3}{2}$$

$$150 = \frac{vt_1}{2} = \frac{vt_3}{2} \quad \therefore t_1 = t_3$$

$$s_2 = 2s_1$$

$$vt_2 = 2 \times \frac{1}{2} \times vt_1 \quad \therefore t_1 = t_2$$

$$\therefore t_1 = t_2 = t_3 = \frac{60}{3} = 20 \text{ s}$$

(iii) Uniform velocity motion during central portion of shaft

$$v = \frac{\text{Displacement}}{\text{Time}} = \frac{300}{20}$$

$v = 15$ m/s

Problem 9

A car accelerates from rest at a constant rate α for some time after which it decelerates at a constant rate β to come to rest. If the total lapse is t seconds, evaluate **(i)** the maximum velocity reached, and **(ii)** the total distance travelled.

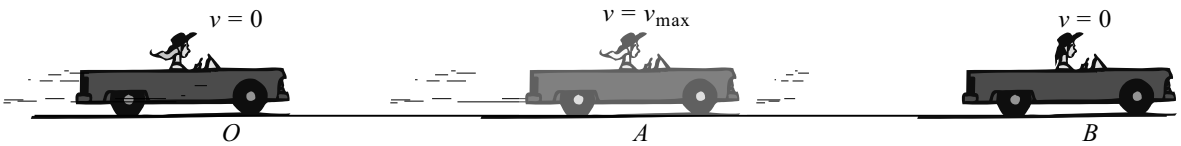

Fig. 10.9(a)

Solution

Method I : By using equation of motion

(i) Motion of the car from *O* to *A*

Initial velocity $u = 0$; Final velocity $v = v_{max}$; Acceleration $a = \alpha$
Time $t = t_1$; Displacement $s = s_1$

$$v = u + at$$

$$v_{max} = 0 + \alpha t_1 \quad \Rightarrow \quad v_{max} = \alpha t_1 \qquad \text{..... (I)}$$

$$v^2 = u^2 + 2as$$

$$v_{max}^2 = 0 + 2\alpha s_1 \quad \Rightarrow \quad s_1 = \frac{v_{max}^2}{2\alpha} \qquad \text{..... (II)}$$

(ii) Motion of the car from *A* to *B*

Initial velocity $u = v_{max}$; Final velocity $v = 0$; Acceleration $a = -\beta$ (deceleration)
Time $= (t - t_1)$; Displacement $s = s_2$

$$v = u + at$$

$$0 = v_{max} + (-\beta)(t - t_1)$$

$$\alpha t_1 = \beta t - \beta t_1$$

$$t_1(\alpha + \beta) = \beta t \quad \therefore \quad t_1 = \frac{\beta t}{\alpha + \beta}$$

(iii) From Eq. (I),

$$v_{max} = \frac{\alpha \beta t}{\alpha + \beta} \qquad \text{..... (III)}$$

$$v^2 = u^2 + 2as$$

$$0 = v_{max}^2 + 2(-\beta)s_2 \quad \Rightarrow \quad s_2 = \frac{v_{max}^2}{2\beta} \qquad \text{..... (IV)}$$

(iv) $s = s_1 + s_2$

From Eqs. (II) and (IV),

$$s = \frac{v_{max}^2}{2\alpha} + \frac{v_{max}^2}{2\beta} = \frac{v_{max}^2}{2}\left(\frac{1}{\alpha} + \frac{1}{\beta}\right) = \frac{v_{max}^2}{2}\left(\frac{\alpha + \beta}{\alpha\beta}\right)$$

From Eq. (III),

$$s = \frac{\alpha^2\beta^2 t^2}{2(\alpha + \beta)^2}\left(\frac{\alpha + \beta}{\alpha\beta}\right) = \frac{\alpha\beta t^2}{2(\alpha + \beta)}$$

Method II : By using *v-t* diagram

(i) Consider the *v-t* diagram shown in Fig. 10.9(b).

$$\text{Slope} = \text{Acceleration} = \alpha = \frac{v_{max}}{t_1}$$

$$\therefore \; v_{max} = \alpha t_1$$

$$\text{Slope} = \text{Acceleration} = \beta = \frac{v_{max}}{(t - t_1)}$$

$$\therefore \; v_{max} = \beta(t - t_1)$$

Equating v_{max}, we have

$$\alpha t_1 = \beta(t - t_1) = \beta t - \beta t_1$$

$$t_1(\alpha + \beta) = \beta t$$

$$t_1 = \frac{\beta t}{\alpha + \beta}$$

$$v_{max} = \alpha t_1 = \frac{\alpha\beta t}{\alpha + \beta}$$

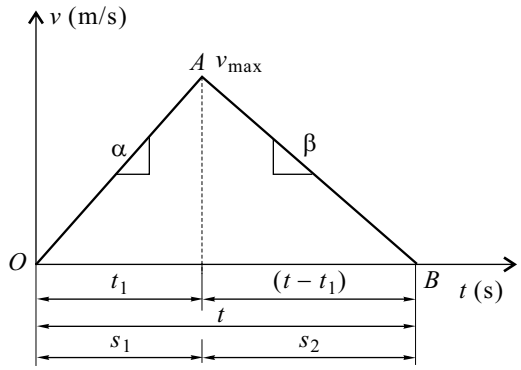

Fig. 10.9(b)

(ii) Displacement = Area under *a-t* diagram

$$s = \frac{1}{2} \times t \times v_{max} = \frac{1}{2} \times t \times \frac{\alpha\beta t}{\alpha + \beta}$$

$$s = \frac{\alpha\beta t^2}{2(\alpha + \beta)}$$

Problem 10

A point is moving with uniform acceleration. In the 11th and 15th second from the commencement, it moves through 7.2 m and 9.6 m, respectively. Find its initial velocity and the acceleration with which it moves.

Solution

Let u = Initial velocity of car and a = Uniform acceleration

Distance travelled in nth s is given by

$$S_n = u + an - \frac{1}{2} a$$

$$S_{11} = u + 11a - \frac{1}{2} \times a = 7.2$$

$$2u + 21a = 14.4 \qquad \text{..... (I)}$$

$$S_{15} = u + 15a - \frac{1}{2} \times a = 9.6$$

$$2u + 29a = 19.2 \qquad \text{..... (II)}$$

Solving Eqs. (I) and (II), we get

$a = 0.6 \text{ m/s}^2$

Putting value of a in Eq. (I), we get

$2u + 21 \times 0.6 = 14.4$, i.e., $u = 1.8$ m/s

$a = 0.6 \text{ m/s}^2$ and $u = 1.8$ m/s

Problem 11

A burglar's car had a start with an acceleration of 2 m/s^2. A police vigilant came in a van to the spot at a velocity of 20 m/s after 3.75 s and continued to chase the burglar's car with a uniform velocity. Find the time in which the police van will overtake the burglar's car.

Solution

Given : Burglar's car $\Rightarrow$ $t = 0$; $a = 2$ m/s^2

Police van $\Rightarrow$ $t = 3.75$ s ; $v = 20$ m/s (constant)

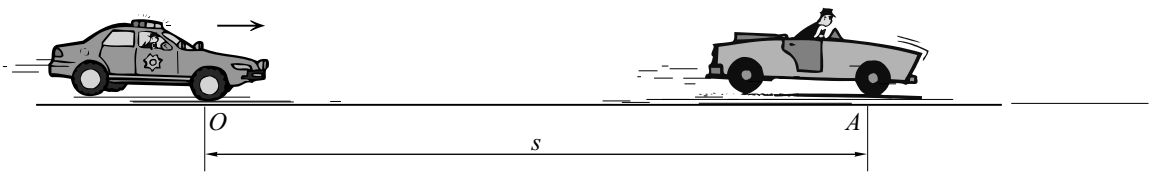

Fig. 10.11

(i) Let t be the time duration for motion of burglar's car. Motion of police van starts after 3.75 s from the given spot. Therefore, time interval will be $(t - 3.75)$ s.

Motion of burglar's car (constant acceleration)

$$s = ut + \frac{1}{2}at^2$$

$$s = 0 + \frac{1}{2} \times 2 \times t^2$$

$$s = t^2 \qquad \text{..... (I)}$$

Motion of police van (constant velocity)

$$s = v \times t$$

$$s = 20(t - 3.75) \qquad \text{..... (II)}$$

(ii) Equating Eqs. (I) and (II), we have

$$t^2 = 20(t - 3.75)$$

$$t^2 = 20t - 75$$

$$t^2 - 20t + 75 = 0$$

Solving the quadratic equation, we get

$t = 5$ s and $t = 15$ s

(iii) In the beginning, the velocity of burglar's car is less than the police van. Therefore, at $t = 5$ s the police van overtakes burglar's car.

Since the burglar's car is moving with constant acceleration, thus as time progresses, velocity of the car also increases, but the velocity of the police van remains the same.

$\therefore$ at $t = 15$ s, burglar's car will overtake the police van.

Solved Problems on Rectilinear Motion Under Gravity

Problem 12

A stone is dropped from the top of a tower. When it has fallen a distance of 10 m, another stone is dropped from a point 38 m below the top of the tower. If both the stones reach the ground at the same time, calculate

(i) the height of the tower, and

(ii) the velocity of the stones when they reach the ground.

Solution

(i) Motion of Stone (1)

$$u_1 = \sqrt{2 \times 9.81 \times 10}$$

$$u_1 = 14 \text{ m/s}$$

$$h - 10 = u_1 t + \frac{1}{2} \times 9.81 \times t^2 \qquad \text{..... (I)}$$

(ii) Motion of Stone (2)

$$h - 38 = u_1 t + \frac{1}{2} \times 9.81 \times t^2 \qquad \text{..... (II)}$$

(iii) Solving Eqs. (I) and (II),

$$h = 57.62 \text{ m}$$

$$t = 2 \text{ s}$$

$$v_1 = \sqrt{2 \times 9.81 \times h}$$

$$v_1 = \sqrt{2 \times 9.81 \times 57.62}$$

$$v_1 = 33.62 \text{ m/s } (\downarrow)$$

$$v_2 = \sqrt{2 \times 9.81 \times (h - 38)}$$

$$v_2 = \sqrt{2 \times 9.81 \times 19.62}$$

$$v_2 = 19.62 \text{ m/s } (\downarrow)$$

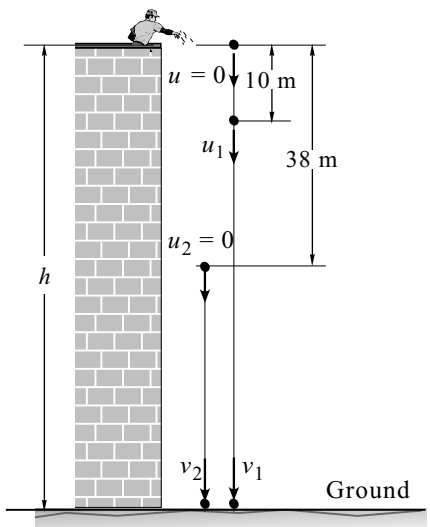

Fig. 10.12

Problem 13

A stone is dropped from a balloon at an altitude of 600 m. How much time is required for the stone to reach the ground if the balloon is

(i) Ascending with a velocity of 10 m/s,

(ii) Descending with a velocity of 10 m/s,

(iii) Stationary, and

(iv) Ascending with a velocity of 10 m/s and an acceleration of 1 m/s^2 (Neglect the air resistance).

Solution : (i) Balloon is ascending with a velocity of 10 m/s

Method I

(a) Motion from *A* to *B* (↑)

Initial velocity of balloon (stone) = $u_b = u_s = 10$ m/s (↑) ;

Final velocity of stone = $v = 0$; $g = -9.81$ m/s^2

Time $t = t_1$; Displacement $h = h_1$.

$v = u + gt$

$0 = 10 + (-9.81)(t_1)$

$t_1 = 1.02$ s

$h_1 = ut + \frac{1}{2}gt^2$

$h_1 = 10 \times 1.02 + \frac{1}{2}(-9.81) \times (1.02)^2$

$h_1 = 5.1$ m

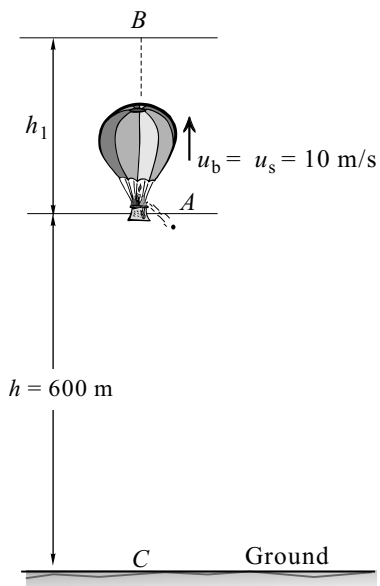

Fig. 10.13(a)

(b) Motion from *B* to *C* (↓)

Initial velocity of stone $u_s = 0$

Displacement $h = 600 + 5.1 = 605.1$ m

Time $t = t_2$.

$h = ut + \frac{1}{2}gt^2$

$605.1 = 0 \times t_2 + \frac{1}{2} \times 9.81 \times (t_2)^2$

$t_2 = 11.11$ s

Total time $t = t_1 + t_2 = 1.02 + 11.11$

$t = 12.13$ s

Method II : Consider initial position *A* and final position *C*

Initial velocity of balloon (stone) = $u_b = u_s = 10$ m/s (↑) ; $g = -9.81$ m/s^2

Displacement $h = -600$ m ; Time $t = t$.

$h = ut + \frac{1}{2}gt^2$

$-600 = 10 \times t + \frac{1}{2}(-9.81) \times t^2$

$4.905t^2 - 10t - 600 = 0$

$$t = \frac{-(-10) \pm \sqrt{(-10)^2 - 4(4.905)(-600)}}{2 \times 4.905}$$

$t = 12.13$ s

(ii) Balloon is descending with a velocity of 10 m/s (↓)

Initial velocity of balloon (stone)

$u_b = u_s = 10$ m/s (↓)

Displacement $h = 600$ m ; $g = 9.81$ m/s^2

Time $t = t$.

$h = ut + \frac{1}{2}gt^2$

$600 = 10 \times t + \frac{1}{2} \times 9.81 \times t^2$

$4.905\,t^2 + 10\,t - 600 = 0$

Solving quadratic equation, we get

$t = 10.09$ s

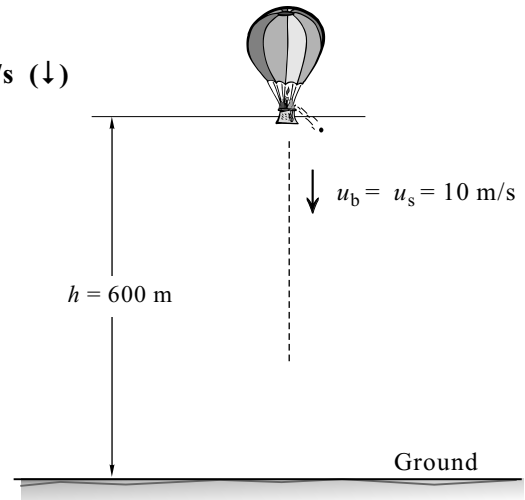

Fig. 10.13(b)

(iii) Balloon is stationary

Initial velocity o balloon (stone)

$u_b = u_s = 0$

Displacement $h = 600$ m ; $g = 9.81$ m/s^2

Time $t = t$.

$h = ut + \frac{1}{2}gt^2$

$600 = 0 + \frac{1}{2} \times 9.81 \times t^2$

$t = 11.06$ s

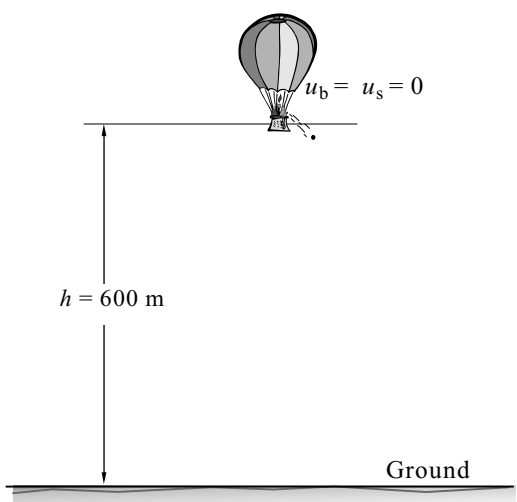

Fig. 10.13(c)

(iv) Balloon ascending with a velocity of 10 m/s and an acceleration of 1 m/s^2.

As long as the stone is attached to balloon, acceleration is influencing increase in velocity of balloon and stone simultaneously. At the instant stone is dropped from balloon, gravity takes over and its motion is unaffected by acceleration of balloon. So, stone simply carries the instantaneous velocity of balloon.

Therefore, cases (i) and (iv) are similar.

$h = ut + \frac{1}{2}gt^2$

$-600 = 10 \times t + \frac{1}{2}(-9.81) \times t^2$

$4.905\,t^2 - 10\,t - 600 = 0$

$t = 12.13$ s

Problem 14

A body A is projected vertically upwards from the top of a tower with a velocity of 40 m/s, the tower being 180 m high. After t seconds, another body B is allowed to fall from the same point. Both the bodies reach the ground simultaneously. Calculate t and the velocities of A and B on reaching the ground.

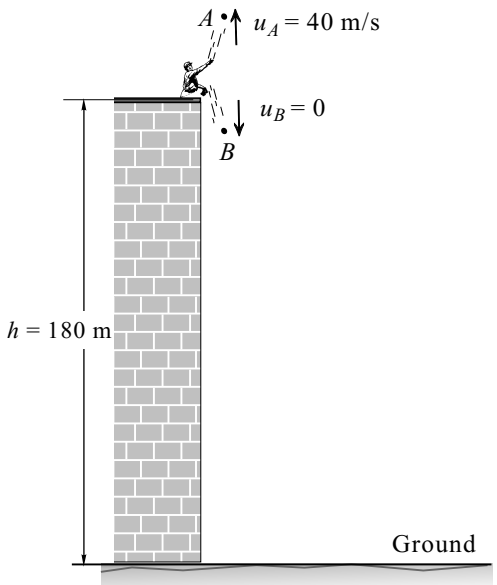

Fig. 10.14

Solution

(i) Motion of Body *A*

$u = u_A = 40$ m/s (↑) ;

$h = -180$ m ; $g = -9.81$ m/s^2

$t = t_A$

$$h = ut + \frac{1}{2}gt^2$$

$$-180 = 40t_A + \frac{1}{2}(-9.81) \times (t_A)^2$$

$$4.905t_A^2 - 40t_A - 180 = 0$$

$$t_A = \frac{-(-40) \pm \sqrt{(-40)^2 - 4(4.905)(-180)}}{2 \times 4.905}$$

$t_A = 11.38$ s

Motion of Body *B*

$u = u_B = 0$ (↓)

$h = 180$ m ; $g = 9.81$ m/s^2

$t = t_B$

$$h = ut + \frac{1}{2}gt^2$$

$$180 = 0 + \frac{1}{2}(9.81) \times (t_B)^2$$

$t_B = 6.06$ s

(ii) $v = u + gt$

$v_A = u_A + gt_A$

$v_A = 40 + (-9.81) \times (11.38)$

$v_A = -71.64$ m/s

$v_A = 71.64$ m/s (↓)

$v = u + gt$

$v_B = u_B + gt_B$

$v_B = 0 + (9.81) \times (6.06)$

$v_B = 59.45$ m/s (↓)

(iii) $t = t_A - t_B = 11.38 - 6.06$

$t = 5.32$ s

Problem 15

A ball is thrown vertically upwards at a velocity of 30 m/s from the top of a 100 m high tower. Five seconds later, another ball is thrown upwards from the base of the tower along the same vertical line at 50 m/s. Find when and where they will meet and their instantaneous velocity then.

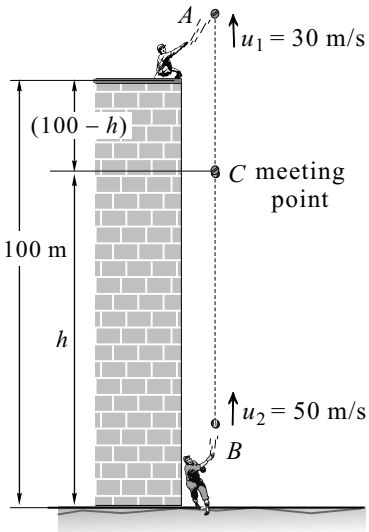

Fig. 10.15

Solution

(i) Motion of first ball from *A* to *C*

$u = u_1 = 30$ m/s (↑)

$h = -(100 - h)$

$g = -9.81$ m/s^2

$t = t$

$h = ut + \frac{1}{2}gt^2$

$-(100 - h) = 30t + \frac{1}{2}(-9.81) \times t^2$

$h = 30t - 4.905t^2 + 100$ ..... (I)

Motion of second ball from *B* to *C*

$u = u_2 = 50$ m/s (↑)

$h = h$

$g = -9.81$ m/s^2

$t = (t - 5)$

$h = ut + \frac{1}{2}gt^2$

$h = 50(t - 5) + \frac{1}{2}(-9.81) \times (t - 5)^2$

$h = 50(t - 5) - 4.905(t - 5)^2$ ..... (II)

(ii) Equating Eqs. (I) and (II),

$30t - 4.905t^2 + 100 = 50(t - 5) - 4.905(t - 5)^2$

$30t - 4.905t^2 + 100 = 50t - 250 - 4.905(t^2 - 10t + 25)$

$30t - 4.905t^2 + 100 = 50t - 250 - 4.905t^2 + 49.05t - 122.625$

$69.05t = 472.625$

$t = 6.85$ s

(iii) From Eq. (I), we get

$h = 30 \times 6.85 - 4.905 \times (6.85)^2 + 100$

$h = 75.35$ m (Meeting point of balls from ground)

(iv) Velocity of first ball

$v = u + gt$

$v = 30 + (-9.81) \times (6.85)$

$v = -37.52$ m/s

$v = 37.52$ m/s (↓)

Velocity of second ball

$v = u + gt$

$v = 50 + (-9.81) \times (6.85 - 5)$

$v = 31.85$ m/s (↑)

Problem 16

From the edge of a cliff, two stones are thrown at the same time, one vertically upwards and the other vertically downwards with the same speed of 20 m/s. The second stone reaches the ground in 5 s. How long will the first be in the air? Also find the height of the cliff.

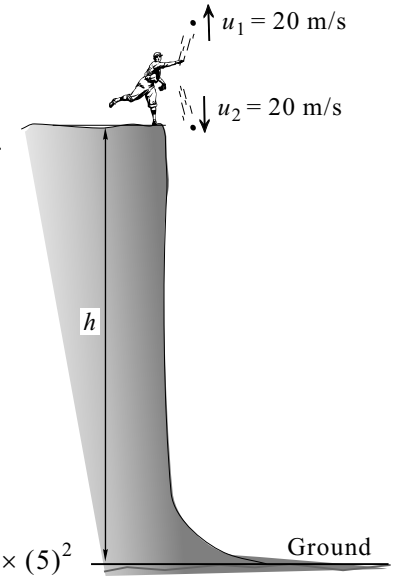

Fig. 10.16

Solution

(i) **Motion of first stone**

$u = 20$ m/s (↑)

$h = -h$

$g = -9.81$ m/s^2

$t = t$

$h = ut + \frac{1}{2}gt^2$

$-h = 20 \times t + \frac{1}{2}(-9.81) \times t^2$

$h = -20t + 4.905t^2$ ..... (I)

Motion of second stone

$u = 20$ m/s (↓)

$h = h$

$g = 9.81$ m/s^2

$t = 5$ s

$h = ut + \frac{1}{2}gt^2$

$h = 20 \times 5 + \frac{1}{2}(9.81) \times (5)^2$

$h = 222.625$ m ..... (II)

(ii) Equating Eqs. (I) and (II),

$-20t + 4.905t^2 = 222.625$

$4.905t^2 - 20t - 222.625 = 0$

$$t = \frac{-(-20) \pm \sqrt{(-20)^2 - 4(4.905)(-222.625)}}{2 \times 4.905} \qquad \therefore \quad t = 9.08 \text{ s}$$

Height of the cliff, $h = 222.625$ m and the first stone will be in air for $t = 9.08$ s.

Problem 17

Two stones are projected vertically upwards at the same instant. One of them ascends 80 meters higher than the other and returns to the earth 4 seconds later. Find **(i)** the velocities of projection, and **(ii)** the maximum heights reached by the stones.

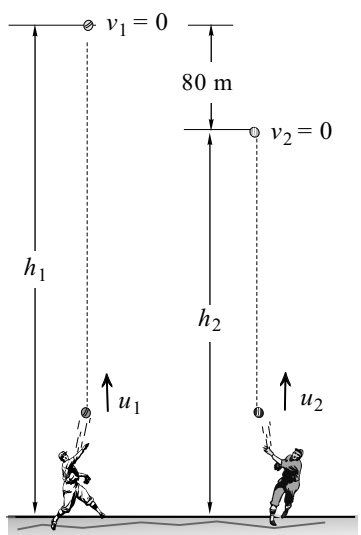

Fig. 10.17

Solution

(i) From the given condition of problem, we have

$h_1 - h_2 = 80$ m ..... (I)

$2t_1 - 2t_2 = 4$

$t_1 - t_2 = 2$ ..... (II)

(ii) **Motion of first stone**

$u = u_1$

$v = v_1 = 0$

$t = t_1$

$h = h_1$; $g = -9.81$ m/s^2

Motion of second stone

$u = u_2$

$v = v_2 = 0$

$t = t_2$

$h = h_2$; $g = -9.81$ m/s^2

$v = u + gt$

$0 = u_1 + (-9.81)t_1$

$u_1 = 9.81t_1$ ..... (III)

$h = ut + \frac{1}{2}gt^2$

$h_1 = u_1t_1 + \frac{1}{2}(-9.81)\,t_1^2$

$h_1 = 9.81t_1^2 - 4.905\,t_1^2$

$h_1 = 4.905\,t_1^2$ ..... (V)

$v = u + gt$

$0 = u_2 + (-9.81)t_2$

$u_2 = 9.81t_2$ ..... (IV)

$h = ut + \frac{1}{2}gt^2$

$h_2 = u_2t_2 + \frac{1}{2}(-9.81)\,t_2^2$

$h_2 = 9.81t_2^2 - 4.905\,t_2^2$

$h_2 = 4.905t_2^2$ ..... (VI)

(iii) From Eq. (I), we have

$4.905\,t_1^2 - 4.905t_2^2 = 80$

$t_1^2 - t_2^2 = 16.31$

$(t_1 - t_2)(t_1 + t_2) = 16.31$

But from Eq. (II), we have $t_1 - t_2 = 2$

$\therefore\ t_1 + t_2 = 8.155$ ..... (VII)

(iv) Solving Eqs. (II) and (VII),

$t_1 + t_2 = 8.155$

$t_1 - t_2 = 2$

we get $t_1 = 5.0775$ s

$t_2 = 3.0775$ s

(v) From Eqs. (III) and (IV), we get

$u_1 = 9.81\,t_1$

$u_1 = 9.81 \times 5.0775$

$u_1 = 49.81$ m/s

$u_2 = 9.81\,t_2$

$u_2 = 9.81 \times 3.0775$

$u_2 = 30.19$ m/s

(vi) From Eqs. (V) and (VI), we get

$h_1 = 4.905\,t_1^2$

$h_1 = 4.905 \times (5.0775)^2$

$h_1 = 126.46$ m

$h_2 = 4.905\,t_2^2$

$h_2 = 4.905 \times (3.0775)^2$

$h_2 = 46.46$ m

Problem 18

In a flood relief area a helicopter going vertically up with a constant velocity drops first batch of food packets, which takes 4 seconds to reach the ground. No sooner this batch reaches the ground, the second batch of food packets are released and this batch takes 5 seconds to reach the ground. From what height was the first batch released? Also, determine the velocity with which the helicopter is moving up?

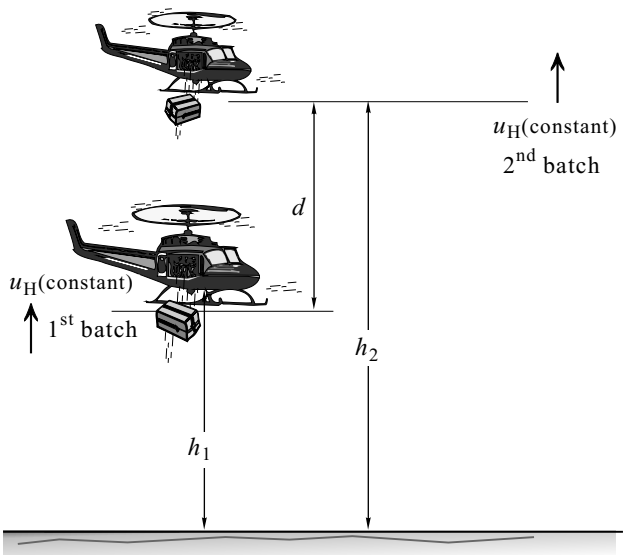

Fig. 10.18

Solution

(i) Motion of first batch under gravity

$u = u_H = u_1 \ (\uparrow)$

$h = -h_1$

$t = 4 \text{ s} ; g = -9.81 \text{ m/s}^2$

$h = ut + \frac{1}{2} gt^2$

$-h_1 = u_H \times 4 + \frac{1}{2}(-9.81) \times (4)^2$

$h_1 = -4u_H + 78.48$

Motion of second batch under gravity

$u = u_H = u_2 \ (\uparrow)$

$h = -h_2$

$t = 5 \text{ s} ; g = -9.81 \text{ m/s}^2$

$h = ut + \frac{1}{2} gt^2$

$-h_2 = u_H \times 5 + \frac{1}{2}(-9.81) \times (5)^2$

$h_2 = -5u_H + 122.625$

Motion of helicopter with constant velocity

$u = u_H \ (\uparrow)$

$t = 4 \text{ s}$

$d = \text{Speed} \times \text{Time}$

$d = u_H \times 4$

(ii) From Fig. 10.18, we have

$d = h_2 - h_1 \qquad (u_1 = u_2 = u_H)$

$4u_H = (-5u_H + 122.625) - (-4u_H + 78.48)$

$u_H = 8.829$ m/s is the velocity of helicopter

(iii) Height from which first batch is released

$h_1 = -4u_H + 78.48$

$h_1 = -4 \times 8.829 + 78.48$

$h_1 = 43.164$ m

Problem 19

The platform of an elevator moves down a mine shaft at an acceleration of 0.4 m/s^2 starting from rest from the top of the shaft. After the elevator has moved down by 20 m, a ball is dropped from the top of the shaft. Find **(i)** the time at which the ball will hit the elevator, and **(ii)** the distance moved by the elevator when the ball hits it.

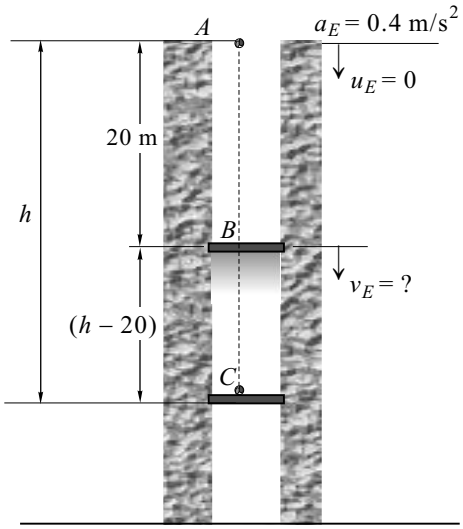

Fig. 10.19

Solution

(i) Motion of elevator from *A* to *B*

$u = u_E = 0$

$s = 20$ m

$a = a_E = 0.4$ m/s^2

$v^2 = u^2 + 2as$

$v^2 = 0 + 2 \times 0.4 \times 20$

$v = 4$ m/s

Motion of elevator from *B* to *C*

$s = (h - 20)$; $u = 4$ m/s

$t = t$

$s = ut + \frac{1}{2} at^2$

$h - 20 = 4 \times t + \frac{1}{2} \times 0.4 \times t^2$

$h = 4t + 0.2t^2 + 20$ ..... (I)

Motion of ball from *A* to *C*

$u = 0$

$h = h$

$t = t$; $g = 9.81$ m/s^2

$h = ut + \frac{1}{2} gt^2$

$h = 0 + \frac{1}{2}(9.81) \times (t)^2$

$h = 4.905t^2$ ..... (II)

(ii) Equating Eqs. (I) and (II), we have

$4t + 0.2t^2 + 20 = 4.905t^2$

$4.705t^2 - 4t - 20 = 0$

$$t = \frac{-(-4) \pm \sqrt{(-4)^2 - 4(4.705)(-20)}}{2 \times 4.705}$$

$t = 2.53$ s (Time taken by the ball to hit the elevator)

$h = 4.905t^2$

$h = 31.4$ m (Distance moved by the elevator when the ball hit with respect to top position)

Problem 20

A stone is dropped gently from the top of a tower. During its last one second of motion it falls through 64 % of the height. Find the height of the tower.

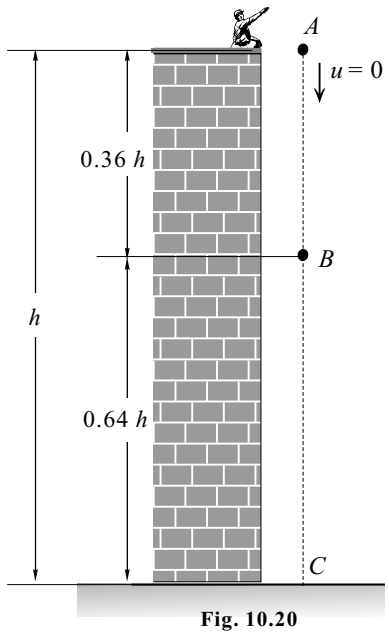

Fig. 10.20

Solution

(i) Let t be the time taken by stone to reach from A to C

$$h = ut + \frac{1}{2}gt^2 = 0 + 4.905t^2$$

$$h = 4.905t^2 \qquad \text{..... (I)}$$

(ii) Consider motion from A to B

Time taken by stone to travel 36 % will be $(t - 1)$

$$h = ut + \frac{1}{2}gt^2$$

$$0.36\,h = 0 + \frac{1}{2} \times (9.81) \times (t-1)^2$$

$$h = \frac{4.905}{0.36} \times (t-1)^2 \qquad \text{..... (II)}$$

(iii) Equating Eqs. (I) and (II), we have

$$4.905t^2 = \frac{4.905}{0.36} \times (t-1)^2$$

$$0.36t^2 = t^2 - 2t + 1$$

$$0.64t^2 - 2t + 1 = 0$$

$$t = \frac{-(-2) \pm \sqrt{(-2)^2 - 4(0.64)(1)}}{2 \times 0.64} \qquad \therefore\ t = 2.5 \text{ s}$$

(iv) From Eq. (I), we get

Height of tower $h = 4.905 \times t^2 = 4.905 \times 2.5^2$

$\therefore\ h = 30.66$ m

Problem 21

A body is allowed to fall vertically under the action of gravity. It travels two points in its path, placed 45 m apart, in 1 second. Find from what height above the higher point was the body allowed to fall.

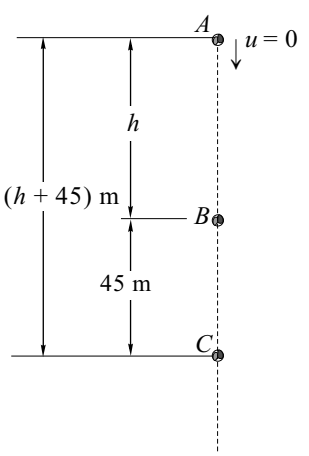

Fig. 10.21

Solution

(i) Motion from *A* to *B*

$$h = ut + \frac{1}{2}gt^2 = 0 + \frac{1}{2}(9.81) \times (t)^2$$

$$h = 4.905t^2 \qquad \text{..... (I)}$$

(ii) Motion from *A* to *C*

Height $= (h + 45)$ m, Time $= (t + 1)$ s

$$h = ut + \frac{1}{2}gt^2$$

$$(h + 45) = 0 + \frac{1}{2}(9.81) \times (t+1)^2$$

(iii) Substituting from Eq. (I), we get

$$4.905t^2 + 45 = 4.905(t^2 + 2t + 1)$$

$$4.905t^2 + 45 = 4.905t^2 + 9.81t + 4.905$$

$$45 - 4.905 = 9.81t$$

$$\therefore\ t = 4.09 \text{ s}$$

$$h = 4.905t^2 = 4.905 \times 4.09^2$$

$$\therefore\ h = 82.05 \text{ m}$$

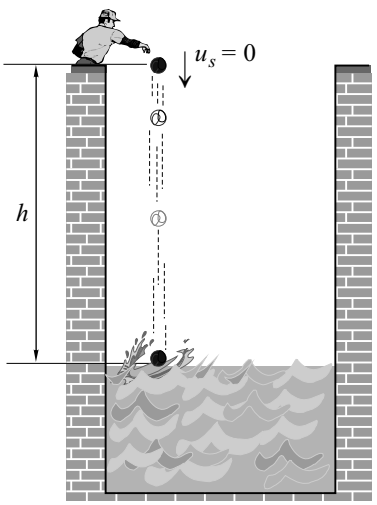

Fig. 10.22

Problem 22

A stone is dropped into a well with no initial velocity and 4.5 seconds later a splash is heard. If the velocity of sound is constant at 330 m/s, find depth of the well up to water level.

Solution

Let t be the time taken by stone to reach the water surface.

(i) **Motion of stone (under gravity)**

$u = u_S = 0$

Height $= h$

Time $= t$

$$h = ut + \frac{1}{2}gt^2$$

$$h = 0 + \frac{1}{2}(9.81) \times t^2$$

$$h = 4.905\, t^2 \qquad \text{..... (I)}$$

Motion of sound (with constant velocity)

Time $= (4.5 - t)$

Displacement = Velocity × Time

$$h = 330(4.5 - t) \qquad \text{..... (II)}$$

(ii) Equating Eqs. (I) and (II),

$$4.905t^2 = 330(4.5 - t)$$

$$4.905t^2 = 330 \times 4.5 - 330t$$

$$4.905t^2 + 330t - 1485 = 0$$

$$t = \frac{-330 \pm \sqrt{(330)^2 - 4\times(4.905)\times(-1485)}}{2 \times 4.905}$$

$t = 4.234$ s or $t = -71.51$ s ($\because$ time cannot be negative)

$$\therefore\ t = 4.234 \text{ s}$$

(iii) Depth of the well up to water level $= h$

$$h = 4.905 \times t^2 = 4.905 \times 4.234^2$$

$$h = 87.93 \text{ m}$$

Problem 23

Drops of water fall from the roof of a 16 m high building, at regular interval of time. When first drop strikes the ground, at the same instant fifth drop starts its fall. Find the distance between individual drops in the air, the instant first drop reaches the ground.

Solution

(i) Motion of first drop

$u = 0$; $h_1 = 16$ m ;

$h = ut + \frac{1}{2}gt^2$

$\therefore\ h_1 = ut_1 + \frac{1}{2} \times (9.81) \times t_1^2 \quad \therefore\ 16 = 0 + \frac{1}{2} \times (9.81) \times t_1^2 \quad \therefore\ t_1 = 1.8$ s

(ii) Let Δt be the time interval to start the motion of each drop. In a time interval of $t_1 = 1.8$ s, four drops have started their motion at regular interval of time.

$\Delta t = \frac{t_1}{4} = \frac{1.8}{4} = 0.45$ s

$t_2 = t_1 - \Delta t = 1.8 - 0.45 = 1.35$ s

$t_3 = t_2 - \Delta t = 1.35 - 0.45 = 0.9$ s

$t_4 = t_3 - \Delta t = 0.9 - 0.45 = 0.45$ s

$t_5 = t_4 - \Delta t = 0.45 - 0.45 = 0$ s

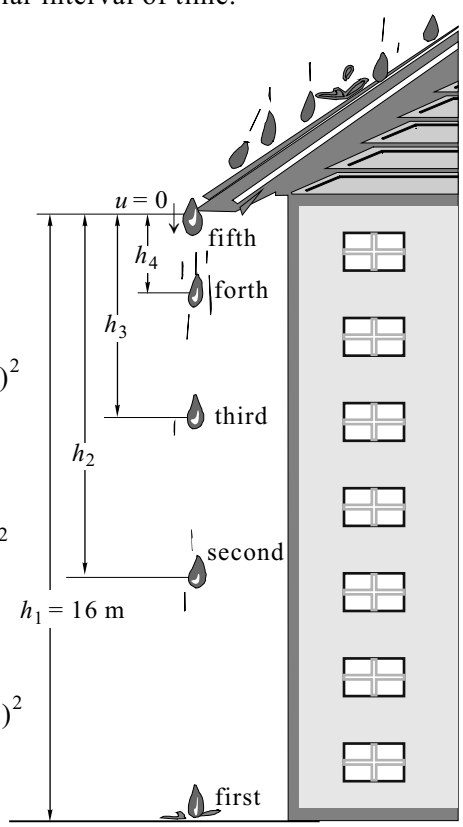

Fig. 10.23

(iii) Motion of second drop

$h_2 = ut_2 + \frac{1}{2}gt_2^2 \quad \therefore\ h_2 = 0 + \frac{1}{2} \times (9.81) \times (1.35)^2$

$\therefore\ h_2 = 8.94$ m

(iv) Motion of third drop

$h_3 = ut_3 + \frac{1}{2}gt_3^2 \quad \therefore\ h_3 = 0 + \frac{1}{2} \times (9.81) \times (0.9)^2$

$\therefore\ h_3 = 3.97$ m

(v) Motion of forth drop

$h_4 = ut_4 + \frac{1}{2}gt_4^2 \quad \therefore\ h_4 = 0 + \frac{1}{2} \times (9.81) \times (0.45)^2$

$\therefore\ h_4 = 0.99$ m

(vi) Distance between individual drops

Distance between first and second drop $= h_1 - h_2 = 7.06$ m

Distance between second and third drop $= h_2 - h_3 = 4.97$ m

Distance between third and forth drop $= h_3 - h_4 = 2.98$ m

Distance between forth and fifth drop $= h_4 - h_5 = 0.99$ m

Problem 24

Water drips from a tap at the rate of five drops per second. Determine the vertical separation between two consecutive drops after the lower drop has attained a velocity of 5 m/s.

Solution

(i) Since water drips from a tap at the rate of five drops per second.

$\therefore$ Time interval between each drop $= \frac{1}{5} = 0.2$ s

(ii) **Motion of Drop *A***

$u = 0$; $v_1 = 5$ m/s

$v = u + gt \quad \Rightarrow 5 = 0 + 9.81 \times t_1 \quad \therefore t_1 = 0.5097$ s

$h_1 = ut_1 + \frac{1}{2}gt_1^2 = 0 + \frac{1}{2} \times 9.81 \times (0.5097)^2$

$h_1 = 1.274$ m

(iii) **Motion of Drop *B***

Time $t_2 = t_1 - 0.2 = 0.5097 - 0.2$

$t_2 = 0.3097$ s

$h_2 = ut_2 + \frac{1}{2}gt_2^2 = 0 + \frac{1}{2} \times 9.81 \times (0.3097)^2$

$h_2 = 0.4705$ m

(iv) The vertical separation between two consecutive drops

$h = h_1 - h_2 = 1.274 - 0.4705$

$h = 0.8035$ m

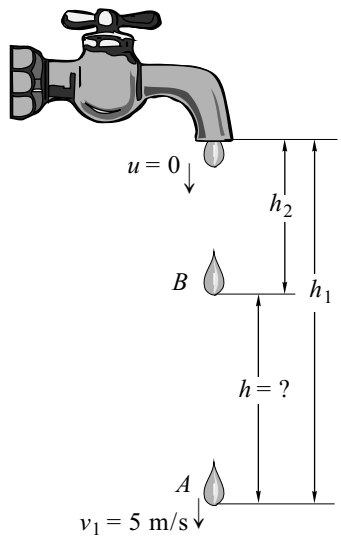

Fig. 10.24

Problem 25

A stone after falling 5 seconds from rest breaks a glass pan and in breaking it lost 30 % of its velocity. How far will it fall in the next second?

Solution

(i) Velocity of stone before glass pan is broken $= v_1$

Velocity of stone after glass pan is broken $= v_2$

(ii) Motion of stone from rest to glass pan before breaking

$t = 5$ s ; $u = 0$; $v = v_1$

$v = u + gt \quad \Rightarrow v_1 = 0 + 9.81 \times 5 \quad \therefore v_1 = 49.05$ m/s

(iii) Loss of 30 % of velocity after breaking the glass pan

$v_2 = 34.335$ m/s $\quad \therefore v_2 = (49.05) \times (0.7)$

(iv) Motion of stone after breaking of glass pan for next 1 s.

$u = v_2$; $t = 1$ s ; displacement $= h$;

$h = ut + \frac{1}{2}gt^2 = 34.335 \times 1 + \frac{1}{2} \times 9.81 \times 1^2$

$h = 39.24$ m

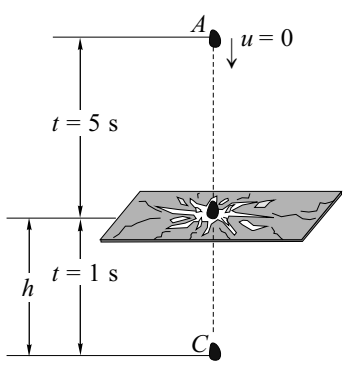

Fig. 10.25

Solved Problems Based on Rectilinear Motion with Variable Acceleration

Problem 26

The motion of the particle along a straight line is governed by the relation $a = t^3 - 2t^2 + 7$ where a is the acceleration in m/s^2 and t is the time in seconds. At time $t = 1$ s. the velocity of the particle is 3.58 m/s and the displacement is 9.39 m. Calculate the displacement, velocity and acceleration at time $t = 2$ s.

Solution

(i) $a = t^3 - 2t^2 + 7$ .....(I)

$$\therefore \frac{dv}{dt} = t^3 - 2t^2 + 7$$

$$\therefore dv = (t^3 - 2t^2 + 7)\, dt$$

Integrating both sides, we get

$$\int dv = \int (t^3 - 2t^2 + 7)\, dt$$

$$\therefore v = \frac{t^4}{4} - \frac{2t^3}{3} + 7t + c_1$$

At $t = 1$ s; $v = 3.58$ m/s

$$\therefore 3.58 = \frac{(1)^4}{4} - \frac{2(1)^3}{3} + 7(1) + c_1$$

$$\therefore c_1 = -3$$

(ii) $v = \frac{t^4}{4} - \frac{2t^3}{3} + 7t - 3$ .....(II)

$$\therefore \frac{ds}{dt} = \frac{t^4}{4} - \frac{2t^3}{3} + 7t - 3$$

$$\therefore ds = \left[\frac{t^4}{4} - \frac{2t^3}{3} + 7t - 3\right] dt$$

Integrating both sides, we get

$$\therefore \int ds = \int \left[\frac{t^4}{4} - \frac{2t^3}{3} + 7t - 3\right] dt$$

(iii) $s = \frac{t^5}{20} - \frac{t^4}{6} + \frac{7t^2}{2} - 3t + c_2$

When $s = 9.39$ m, at $t = 1$ s.

$$\therefore 9.39 = \frac{(1)^5}{20} - \frac{(1)^4}{6} + \frac{7(1)^2}{2} - 3(1) + c_2$$

$$\therefore c_2 = 9$$

$$\therefore s = \frac{t^5}{20} - \frac{t^4}{6} + \frac{7t^2}{2} - 3t + 9 \quad .....(III)$$

(iv) At $t = 2$ s. from Eqs. (I), (II) and (III), we have

$$\therefore\ s = \frac{(2)^5}{20} - \frac{(2)^4}{6} + \frac{7(2)^2}{2} - 3(2) + 9 \qquad \therefore\ s = 15.93 \text{ m}$$

$$\therefore\ v = \frac{(2)^4}{4} - \frac{2(2)^3}{3} + 7(2) - 3 \qquad \therefore\ v = 9.667 \text{ m/s}$$

$$\therefore\ a = (2)^3 - 2(2)^2 + 7 \qquad \therefore\ a = 7 \text{ m/s}^2$$

Problem 27

The acceleration of the particle is defined by the relation $a = 25 - 3x^2$ mm/s^2. The particle starts with no initial velocity at the position $x = 0$, determine **(i)** the velocity when $x = 2$ mm, **(ii)** the position when velocity is again zero, and **(iii)** the position where the velocity is maximum and the corresponding maximum velocity.

Solution

$$a = 25 - 3x^2 \qquad .....(I)$$

$$v\frac{dv}{dx} = 25 - 3x^2$$

$$v\,dv = (25 - 3x^2)\,dx$$

Integrating both sides, we get

$$\frac{v^2}{2} = 25x - 3x^3 + c$$

At $x = 0$, $v = 0$ $\therefore\ c = 0$

$$v^2 = 50x - 2x^3 \qquad .....(II)$$

(i) $v = ?$ when $x = 2$ mm

From Eq. (II),

$$v^2 = 50 \times 2 - 2 \times 2^3$$

$$v = 9.17 \text{ mm/s}$$

(ii) $x = ?$ when $v = 0$ (again)

From Eq. (II),

$$0 = 50x - 2x^3$$

$$x = \pm 5 \text{ mm}$$

(iii) $x = ?$ when v_{max} and $v_{max} = ?$

For velocity to be maximum, $\frac{ds}{dt} = 0 = a$

From Eq. (I),

$$0 = 25 - 3x^2$$

$$x = 2.887 \text{ mm}$$

From Eq. (II),

$$v_{max}^2 = 50 \times 2.887 - 2 \times 2.887^3$$

$$v_{max} = 9.809 \text{ mm/s}$$

Problem 28

The displacement (x) of a particle moving in one direction, under the action of a constant force is related to the time t by the equation $t = \sqrt{x} + 3$ where x is in metres and t is in seconds. Find the displacement of the particle when its velocity is zero.

Solution

Given: $t = \sqrt{x} + 3 \quad \therefore \sqrt{x} = t - 3$

Squaring both sides,

$\therefore (\sqrt{x})^2 = (t-3)^2$

$x = t^2 - 6t + 9$

Differentiating both sides, we get

$$\frac{dx}{dt} = 2t - 6$$

$\therefore v = 2t - 6$

When $v = 0$

$\therefore 0 = 2t - 6$

$t = 3$ s

At $t = 3$ s

$x = t^2 - 6t + 9$

$x = (3)^2 - 6(3) + 9$

$x = 0$

Problem 29

A particle starting from rest at the position (5, 6, 2) m accelerates at $\bar{a} = 6t\,\bar{i} - 24t^2\,\bar{j} + 10\,\bar{k}$ m/s^2. Determine the acceleration, velocity and displacement of the particle at the end of 2 s.

Solution

Given: $\bar{a} = 6t\,\bar{i} - 24t^2\,\bar{j} + 10\,\bar{k}$ ..... (I)

(i) Integrating, we get

$\bar{v} = (3t^2 + c_1)\,\bar{i} - (8t^3 + c_2)\,\bar{j} + (10t + c_3)\,\bar{k}$

At $t = 0, v = 0 \quad \therefore c_1 = c_2 = c_3 = 0$

$\bar{v} = 3t^2\,\bar{i} - 8t^3\,\bar{j} + 10t\,\bar{k}$ ..... (II)

Integrating, we get

$\bar{r} = (t^3 + c_4)\,\bar{i} - (2t^4 + c_5)\,\bar{j} + (5t^2 + c_6)\,\bar{k}$

At $t = 0, s\,(5, 6, 2) \quad \therefore c_4 = 5, c_5 = 6, c_6 = 2$

$\bar{r} = (t^3 + 5)\,\bar{i} - (2t^4 + 6)\,\bar{j} + (5t^2 + 2)\,\bar{k}$ ..... (III)

(ii) Putting $t = 2$ s in Eqs. (I), (II) and (III), we get

$\bar{a} = 12\,\bar{i} - 96\,\bar{j} + 10\,\bar{k}$ magnitude $a = \sqrt{12^2 + 96^2 + 10^2} = 97.26$ m/s^2

$\bar{v} = 12\,\bar{i} - 64\,\bar{j} + 20\,\bar{k}$ magnitude $v = \sqrt{12^2 + 64^2 + 20^2} = 68.12$ m/s

$\bar{r} = 13\,\bar{i} - 38\,\bar{j} + 22\,\bar{k}$ magnitude $r = \sqrt{13^2 + 38^2 + 22^2} = 45.79$ m

Problem 30

Motion of the particle along a straight line is defined by $v^3 = 64s^2$ where v is in m/s and s is in m. Determine the

(i) velocity when distance covered is 8 m,

(ii) acceleration when distance covered is 27 m, and

(iii) acceleration when the velocity is 9 m/s.

Solution

(i) $v^3 = 64s^2$ At $s = 8$ m; $v = ?$

$\therefore\ v^3 = 64(8)^2 \quad \therefore\ v = 16$ m/s

(ii) At $s = 27$ m; $a = ?$

$$v^3 = 64s^2$$

$$3v^2 \cdot \frac{dv}{dt} = 64(2s)\left(\frac{ds}{dt}\right)$$

$$3v^2 \cdot (a) = 128 \cdot s(v)$$

$$\therefore\ a = \frac{128 \cdot s}{3v}$$

At $s = 27$ m

$$v^3 = 64(27)^2$$

$$v = 36 \text{ m/s}$$

$$\therefore\ a = \frac{128 \times 27}{3 \times 36} \quad \therefore\ a = 32 \text{ m/s}^2$$

OR

$$v^3 = 64s^2$$

$$3v^2 \cdot \frac{dv}{ds} = 64(2s)$$

$$3\left[v \cdot \frac{dv}{ds}\right] v = 128\, s$$

$$3(a) \cdot v = 128\, s$$

$$a = \frac{128s}{3v}$$

$$\therefore\ a = \frac{128 \times 27}{3 \times 36} \quad \therefore\ a = 32 \text{ m/s}^2$$

(iii) At $v = 9$ m/s; $a = ?$

$$v^3 = 64s^2$$

$$(9)^3 = 64s^2 \quad \therefore\ s = 3.375 \text{ m}$$

$$\therefore\ a = \frac{128 \cdot s}{3v} = \frac{128 \times 3.375}{3 \times 9}$$

$$\therefore\ a = 16 \text{ m/s}^2$$

Problem 31

The velocity of a particle travelling in a straight line is given by $v = 6t - 3t^2$ m/s where t is in seconds. If $s = 0$ when $t = 0$, determine the particle's deceleration and position when $t = 3$ s. How far has the particle travelled during the 3 s time interval and what is its average speed?

Solution

(i) $v = 6t - 3t^2$ ..... (I)

Differentiating Eq. (I) w.r.t. time, we get

$v = 6t - 3t^2$ ..... (II)

Integrating Eq. (I), we get

$$s = \frac{6t^2}{2} - \frac{3t^3}{3} + c \qquad (\text{At } t = 0;\ s = 0 \therefore c = 0)$$

$s = 3t^2 - t^3$ ..... (III)

(ii) Putting $t = 3$ s in Eqs. (II) and (III), we get

$a = 6 - 6 \times 3$

$a = -12 \text{ m/s}^2$

$s = 3 \times 3^2 - 3^3$

$s = 0$

(iii) For distance travelled, let us find time for point of reversal where $v = 0$

From Eq. (I)

$0 = 6t - 3t^2$

$t = 2$ s

Particle is travelling 2 s in same direction and reversing the direction.

Distance covered in $t = 2$ s from Eq. (III),

$s = 3 \times 2^2 - 2^3$

$s = 4$ m

In 3 s, displacement $s = 0$

$\therefore$ distance travelled $= 4 + 4$

$d = 8$ m

(iv) $$\text{Average speed} = \frac{\text{Distance travelled}}{\text{Time}}$$

$$\text{Average speed} = \frac{8}{3}$$

$v = 2.667$ m/s

Problem 32

The acceleration of an oscillating particle is defined by the relation $a = -kx$. Determine **(i)** the value of k such that $v = 15$ m/s when $x = 0$ and $v = 0$ when $x = 3$ m, and **(ii)** the speed of the particle when $x = 2$ m.

Solution

$$a = -kx$$

$$v \cdot \frac{dv}{dx} = -kx \quad \Rightarrow \quad v \cdot dv = -kx\,dx$$

Integrating, we get

$$\therefore \int v \cdot dv = -\int kx\,dx$$

$$\frac{v^2}{2} = -\frac{kx^2}{2} + c_1$$

Put $x = 0$, when $v = 15$ m/s

$$\frac{(15)^2}{2} = -\frac{k(0)^2}{2} + c_1 \qquad \therefore c_1 = 112.5$$

$$\therefore \frac{v^2}{2} = -\frac{kx^2}{2} + 112.5$$

(i) Put $v = 0$, when $x = 3$ m

$$\therefore \frac{(0)^2}{2} = -\frac{k(3)^2}{2} + 112.5 \qquad \therefore k = 25$$

(ii) Find v when $x = 2$ m

$$\therefore \frac{v^2}{2} = -\frac{25(2)^2}{2} + 112.5$$

$$\therefore v = 11.18 \text{ m/s}$$

Problem 33

The motion of a particle moving in a straight line is given by the expression $s = t^3 - 3t^2 + 2t + 5$ where 's' is the displacement in metres and 't' is time in seconds. Determine the **(i)** velocity and acceleration after 4 s, **(ii)** maximum or minimum velocity and corresponding displacement, and **(iii)** time at which velocity is zero.

Solution

$$s = t^3 - 3t^2 + 2t + 5 \qquad \text{..... (I)}$$

Differentiating w.r.t. time, we get

$$v = 3t^2 - 6t + 2 \qquad \text{..... (II)}$$

Differentiating w.r.t. time, we get

$$a = 6t - 6 \qquad \text{..... (III)}$$

(i) $v = ?$ and $a = ?$ at $t = 4$ s

From Eqs. (II) and (III), we get

$$v = 3 \times 4^2 - 6 \times 4 + 2 = 26 \text{ m/s}$$

$$a = 6 \times 4 - 6 = 18 \text{ m/s}^2$$

(ii) $v_{max} = ?$, $v_{min} = ?$ and $s = ?$

For maximum or minimum, $\frac{dv}{dt} = 0$

From Eq. (III),

$0 = 6t - 6 \quad \therefore \; t = 1$ s

From Eqs. (I) and (II),

$v = 3 \times 1^2 - 6 \times 1 + 2 = -1$ m/s

$\therefore \; v_{min} = -1$ m/s

$s = 1^3 - 3 \times 1^2 + 2 \times 1 + 5 = 5$ m

(iii) $t = ?$ at $v = 0$

From Eq. (II),

$0 = 3t^2 - 6t + 2$

Solving the above equation,

$t = 1.577$ s or $t = 0.423$ s

Problem 34

The velocity of a particle moving along a straight line is given by $v = 2t^3 + 5t^2$ where v is in m/s and t is in seconds. What distance does it travel while its velocity increases from 7 m/s to 99 m/s ?

Solution

(i) $v = 2t^3 + 5t^2$

$$\frac{ds}{dt} = 2t^3 + 5t^2 \quad \therefore \; ds = (2t^3 + 5t^2)\, dt$$

Integrating both sides,

$$\therefore \int_{s_1}^{s_2} ds = \int_{t_1}^{t_2} (2t^3 + 5t^2)\, dt$$

(ii) *Given*: $v = 2t^3 + 5t^2$

Putting $t = 1$ s, we get

$v = 7$ m/s

$\therefore \; t_1 = 1$ s

$v = 2t^3 + 5t^2$

Putting $t = 3$ s, we get

$v = 99$ m/s

$\therefore \; t_2 = 3$ s

(iii) $$\int_{s_1}^{s_2} ds = \int_{t_1 = 1}^{t_2 = 3} (2t^3 + 5t^2)\, dt \quad \therefore \; \Big[s\Big]_{s_1}^{s_2} = \left[\frac{2t^4}{4} + \frac{5t^3}{3}\right]_{t_1 = 1}^{t_2 = 3}$$

$$\therefore \; s_2 - s_1 = \left[\left(\frac{(3)^4}{2} + \frac{5(3)^3}{3}\right) - \left(\frac{(1)^4}{4} + \frac{5(1)^3}{3}\right)\right]$$

$s_2 - s_1 = 83.33$ m

Problem 35

A particle, starting from rest, moves in a straight line and its acceleration is given by $a = 50 - 36t^2$ m/s^2. Determine the velocity of the particle when it has travelled 52 m and the time taken by it before it comes to rest again.

Solution

(i) $a = 50 - 36t^2$ ..... (I)

$$\frac{dv}{dt} = 50 - 36t^2 \Rightarrow dv = (50 - 36t^2)\,dt$$

Integrating both sides, we get

$$\int dv = \int (50 - 36t^2)\,dt$$

$$v = 50t - \frac{36t^3}{3} + c_1$$

At $t = 0,\ v = 0 \quad \therefore c_1 = 0$

$v = 50t - 12t^3$ ..... (II)

$$\frac{dx}{dt} = 50t - 12t^3 \Rightarrow dx = (50t - 12t^3)\,dt$$

Integrating both sides, we get

$$\int dx = \int (50t - 12t^3)\,dt$$

$$x = \frac{50t^2}{2} - \frac{12t^4}{4} + c_2$$

Assuming particle starts from origin,

At $t = 0,\ x = 0 \quad \therefore c_2 = 0$

$x = 25t^2 - 3t^4$ ..... (III)

(ii) Putting $x = 52$ m in Eq. (III),

$52 = t^2(25 - 3t^2)$

$3(t^2)^2 - 25t^2 + 52 = 0$

$t^2 = 4$ s and $t^2 = 4.33$ s

$\therefore\ t = 2$ s or $t = 2.08$ s

To check whether particle changes its direction of motion, put $v = 0$ in Eq. (II)

$\therefore\ t = 2.04$ s

The particle is moving in same direction till $t = 2.04$ s

$\therefore$ Displacement = Distance travelled

After $t > 2.04$ s, distance travelled is more than magnitude of displacement

$\because\ x = 52$ m is the distance travelled

$\therefore\ t = 2$ s $(t \neq 2.08$ s$)$

From Eq. (II), $v = 4$ m/s.

Problem 36

A particle moving in the positive x-direction has an acceleration $a = (100 - 4v^2)$ m/s^2 where v is in m/s. Determine **(i)** the time interval and displacement of particle when speed changes from 1 m/s to 3 m/s, and **(ii)** the speed of the particle at $t = 0.05$ s.

Solution

(i) $a = 100 - 4v^2$

$$\frac{dv}{dt} = 4(25 - v^2) \qquad \therefore \quad \frac{dv}{25 - v^2} = 4.\, dt$$

Integrating both sides, we get

$$\int_1^3 \frac{dv}{5^2 - v^2} = 4 \int_{t_1}^{t_2} dt$$

$$\frac{1}{2 \times 5}\left[\log_e\left(\frac{5+v}{5-v}\right)\right]_1^3 = 4\Big[t\Big]_{t_1}^{t_2}$$

$$\frac{1}{10}\left[\log_e\left(\frac{5+3}{5-3}\right) - \log_e\left(\frac{5+1}{5-1}\right)\right] = 4\ [t_2 - t_1]$$

$$\therefore \quad t_2 - t_1 = \frac{1}{40}\ \log_e\left[\frac{8}{3}\right]$$

Time interval $= t_2 - t_1 = 0.0245$ s

Given: $a = 100 - 4v^2$

$$v\,\frac{dv}{dt} = 4(25 - v^2) \qquad \therefore \quad \frac{v}{5^2 - v^2}\, dv = 4\, ds$$

Integrating both sides,

$$-\frac{1}{2}\int_1^3 \frac{-2v}{5^2 - v^2}\, dv = 4 \int_{s_1}^{s_2} ds$$

$$-\frac{1}{2}\Big[\log_e (25 - v^2)\Big]_1^3 = 4\Big[s\Big]_{s_1}^{s_2}$$

$$\therefore \quad s_2 - s_1 = -\frac{1}{8}\ [\log (25 - 3^2) - \log (25 - 1)^2]$$

$$\therefore \quad s_2 - s_1 = \log_e\left(\frac{16}{24}\right) \qquad \therefore \quad s_2 - s_1 = 0.0506 \text{ m}$$

(ii) $a = 100 - 4v^2$ At $t = 0.05$ s

$v = ?$

$$\frac{dv}{dt} = 4(25 - v^2)$$

$$\therefore \quad \frac{dv}{5^2 - v^2} = 4\, dt$$

Integrating we get,

$$\int \frac{dv}{5^2 - v^2} = 4\int dt$$

$$\frac{1}{2 \times 5} \log_e \left(\frac{5+v}{5-v}\right) = 4t + c$$

Assuming $t = 0$, $v = 0$, $\therefore c = 0$

$$\frac{1}{10} \log_e \left(\frac{5+v}{5-v}\right) = 4t$$

$$\therefore \frac{5+v}{5-v} = e^{40t} = e^{40(0.05)t}$$

$$\therefore v = 3.81 \text{ m/s}$$

Problem 37

A jet plane starts from rest at $x = 0$ and is subjected to the acceleration shown in Fig. 10.37. Determine the speed of the plane when it has travelled 60 m.

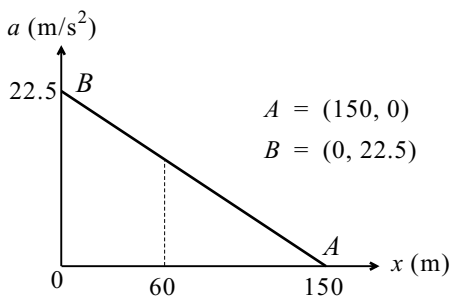

Fig. 10.37

Solution

Using $y = mx + c$ for straight line, we obtain

$$a = -0.15\,x + 22.5$$

$$v \cdot dv = (-0.15\,x + 22.5)\,dx$$

$$\int_0^{v_1} v \cdot dv = \int_0^{60} (-0.15\,x + 22.5)\,dx$$

$$\frac{v_1^2}{2} = \left[-0.15\,\frac{x^2}{2} + 22.5x\right]_0^{60}$$

$$\therefore \frac{v_1^2}{2} = -0.15\,\frac{(60)^2}{2} + 22.5(60)$$

$$\therefore v_1 = 46.476 \text{ m/s}$$

$$\text{Slope} = \frac{0 - 22.5}{150 - 0}$$

$$= -0.15$$

$$y\text{-Intercept} = 22.5$$

Problem 38

A point moves in the plane xy according to the law $x = kt$ and $y = kt\,(1 - \alpha t)$, where k and t are positive constants and t is time. Find **(i)** the equation of the points trajectory $y(x)$, and **(ii)** the velocity v and acceleration a of the point as function of time.

Solution

(i) $x = kt$

$$\therefore t = \frac{x}{k}$$

$$y = kt\,(1 - \alpha t)$$

Substituting t, $y = k\left(\frac{x}{k}\right)\left[1 - \alpha\left(\frac{x}{k}\right)\right]$

$$y = x\left[1 - \frac{\alpha x}{k}\right] \quad \text{i.e., } y(x) = x\left[1 - \frac{\alpha x}{k}\right]$$

$$\therefore\ y(x) = x - \frac{\alpha x^2}{k}$$

Equation of the points trajectory.

(ii) $x = kt$ $\qquad$ $y = kt\,(1 - \alpha t)$

$$\frac{dx}{dt} = k \qquad \frac{dy}{dt} = k\,(1 - 2\alpha t)$$

$$\therefore\ v_x = k \qquad v_y = k\,(1 - 2\alpha t)$$

$$v = \sqrt{(v_x)^2 + (v_y)^2} = \sqrt{(k)^2 + [k\,(1 - 2\alpha t)]^2} = \sqrt{(k)^2\,[1 + (1 - 2\alpha t)]^2}$$

$$\therefore\ v = k\sqrt{1 + (1 - 2\alpha t)^2}$$

Further,

$$\frac{d^2x}{dt^2} = 0 \qquad \frac{d^2y}{dt^2} = -2k\alpha$$

$$\therefore\ a_x = 0 \qquad \therefore\ a_y = -2k\alpha$$

$$\therefore\ a = \sqrt{(ax)^2 + (ay)^2} = \sqrt{(0)^2 + (-2k\alpha)^2}$$

$$\therefore\ a = 2k\alpha$$

Problem 39

A particle moves in a plane with constant acceleration $a = 4\,i$ m/s^2. At $t = 0$, the velocity of the particle was $v_0 = i + 1.732\,j$ m/s. Find velocity of the particle at $t = 1$ s.

Solution

$a = 4\,i$

Integrating, we get

$v = (4t + c_1)\,i + c_2\,j$

At $t = 0$, $v = i + 1.732\,j = c_1\,i + c_2\,j$ $\quad \therefore\ c_1 = 1$ and $c_2 = 1.732$

$v = (4t + 1)\,i + 1.732\,j$

At $t = 1$ s

$v = 5\,i + 1.732\,j$

$$\tan\theta = \frac{v_y}{v_x} = \frac{1.732}{5}$$

$$\therefore\ \theta = 19.11^{\circ}$$

$$\therefore\ v = \sqrt{v_x^{\,2} + v_y^{\,2}} = \sqrt{(5)^2 + (1.732)^2}$$

$v = 5.29$ m/s $\angle\theta$

Problem 40

The velocity of the particle is given by the equation $v = (8 - 0.02s)$ m/s where v is the velocity in m/s and s is the displacement in metres. Knowing $t = 0$, $s = 0$, determine the **(i)** distance traveled before the particle comes to rest, **(ii)** acceleration at start, and **(iii)** time required for 100 m displacement.

Solution

(i) Distance travelled before the particle comes to rest

Particle at rest means $v = 0$

$0 = 8 - 0.02s \quad \therefore \; s = 400$ m

(ii) Acceleration

$$a = \frac{dv}{dt} = \frac{dv}{ds} \times \frac{ds}{dt}$$

$$\therefore \; a = v \cdot \frac{dv}{ds}$$

$$\therefore \; a = (8 - 0.02s) \cdot \frac{d}{ds}(8 - 0.02s) = (8 - 0.02s) \cdot (-0.02)$$

$$a = -0.16 + 0.0004s$$

Now at start $s = 0$, putting value of $s = 0$

$$a = -0.16 + 0.0004\,(0) \quad \therefore \; a = -0.16 \text{ m/s}^2$$

(iii) $v = \dfrac{ds}{dt}$

$$\therefore \; (8 - 0.02s) = \frac{ds}{dt}$$

$$\therefore \int \frac{ds}{(8 - 0.02s)} = \int dt + c$$

$$\frac{\log_e (8 - 0.02s)}{(-0.02)} = t + c$$

Now put $t = 0$ and $s = 0$

$$\frac{\log_e (8 - 0.02(0))}{-0.02} = 0 + c$$

$$\therefore \; c = -103.972$$

$$\therefore \; \frac{\log_e (8 - 0.02s)}{-0.02} = t - 103.972$$

At $t = ?$ $\quad s = 100$ m

$$\frac{\log_e (8 - 0.02(100))}{-0.02} = t - 103.972$$

$$\therefore \; t = 14.384 \text{ s}$$

Problem 41

A metallic particle is subjected to the influence magnetic field such that it travels vertically downwards through a fluid that extends from plate A to plate B. If the particle is released from rest at C, s = 100 mm and acceleration is measured as $a = (4s)$ m/s^2 where s is in metres, determine the velocity of the particle when it reaches plate B, i.e., s = 200 mm, and the time needed from C to plate B.

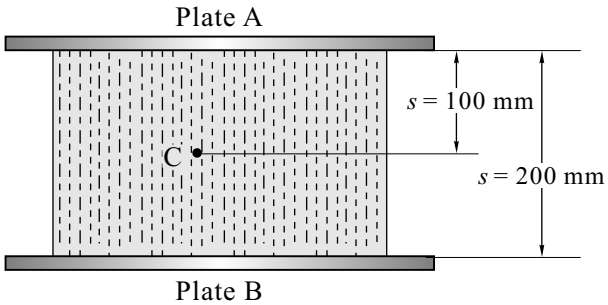

Fig. 10.41

Solution

(i) *Given*: $a = 4s$

$$\therefore \; v \cdot \frac{dv}{ds} = 4s$$

$$\therefore \; v \cdot dv = 4s \,.\, ds$$

Integrating both sides, we get

$$\int v \cdot dt = 4 \int s \, ds + c_1$$

$$\therefore \; \frac{v^2}{2} = 4 \cdot \frac{s^2}{2} + c_1$$

At $s = 0.1$ m, $v = 0$

$$0 = \frac{4}{2}(0.1)^2 + c_1 \qquad \therefore \; c_1 = -2(0.1)^2$$

$$\therefore \; \frac{v^2}{2} = 2s^2 - 2(0.1)^2$$

$$v^2 = 4(s^2 - 0.1^2) \qquad \therefore \; v = 2\sqrt{s^2 - 0.1^2}$$

At $s = 0.2$ m,

$$v = 2\sqrt{(0.2)^2 - (0.1)^2} \qquad \therefore \; v = 0.3464 \text{ m/s}$$

(ii) $v = \dfrac{ds}{dt}$

$$\frac{ds}{dt} = 2\sqrt{s^2 - 0.1^2}$$

$$\therefore \; \frac{ds}{\sqrt{s^2 - 0.1^2}} = 2 \cdot dt$$

Integrating both sides, we get

$$\int_{s=0.1}^{s=0.2} \frac{ds}{\sqrt{s^2 - 0.1^2}} = 2 \int_0^t dt$$

$$\left[ln\,(s + \sqrt{s^2 - 0.1^2}\,) \right]_{0.1}^{0.2} = 2 \left[t \right]_0^t$$

$$ln\,[0.2 + \sqrt{0.2^2 - 0.1^2}\,] - ln\,[0.1 + \sqrt{0.1^2 - 0.1^2}\,] = 2 \cdot t$$

$$t = 0.6585 \text{ s}$$

Problem 42

Acceleration of a particle is defined by the relation $a = 100 \sin\left(\frac{\pi t}{2}\right)$, where a is expressed in mm/s^2 and t in seconds. Knowing that at $t = 0$, $x = 0$ and $v = 0$ in the usual notations, determine the **(i)** maximum velocity of the particle, and **(ii)** position of the particle at $t = 4$ s.

Solution

For maximum velocity, $a = 0$ $\quad a = 100 \cdot \sin\left(\frac{\pi t}{2}\right) \Rightarrow 0 = 100 \cdot \sin\left(\frac{\pi t}{2}\right)$

$$\therefore \sin\left(\frac{\pi t}{2}\right) = 0$$

$$\sin\left(\frac{\pi t}{2}\right) = \sin(n\pi) \quad \text{where } n = 0, 1, 2, 3, ...$$

$$\frac{\pi t}{2} = n\pi \qquad \therefore t = 2n$$

$$t = 0, 2, 4, 6, 8, 10, ... \text{ s}$$

$$\therefore \frac{dv}{dt} = 100 \sin\left(\frac{\pi t}{2}\right) \quad \therefore dv = 100 \sin\left(\frac{\pi t}{2}\right) \cdot dt$$

Integrating both sides, we get

$$\int dv = 100 \int \sin\left(\frac{\pi t}{2}\right) \cdot dt \quad \therefore v = 100 \left[\frac{-\cos\left(\frac{\pi t}{2}\right)}{\left(\frac{\pi}{2}\right)}\right] + c_1$$

At $t = 0$, $v = 0$

$$0 = 100 \left[\frac{-\cos\left(\frac{\pi \times 0}{2}\right)}{\left(\frac{\pi}{2}\right)}\right] + c_1 \qquad \therefore c_1 = \frac{200}{\pi}$$

$$\therefore v = -\frac{200}{\pi} \cos\left(\frac{\pi t}{2}\right) + \frac{200}{\pi} = \frac{200}{\pi}\left[1 - \cos\left(\frac{\pi t}{2}\right)\right]$$

At $t = 0$, $v = 0$	At $t = 4$, $v = 0$
At $t = 2$, $v = \frac{400}{\pi}$ mm/s	At $t = 6$, $v = \frac{400}{\pi}$ mm/s

$$v_{max} = \frac{400}{\pi} \text{ mm/s at } t = 2, 4, 6, ... \text{ s}$$

$$\therefore \frac{dx}{dt} = \frac{200}{\pi}\left[1 - \cos\left(\frac{\pi t}{2}\right)\right] \qquad \therefore dx = \frac{200}{\pi}\left[1 - \cos\left(\frac{\pi t}{2}\right)\right] dt$$

$$\int_0^x dx = \int_0^{t=4\text{ s}} \frac{200}{\pi}\left[1 - \cos\left(\frac{\pi t}{2}\right)\right] dt$$

$$\therefore x = \frac{200}{\pi}\left[t - \frac{\sin\left(\frac{\pi t}{2}\right)}{\left(\frac{\pi}{2}\right)}\right]_0^4 = \frac{200}{\pi}\left[\left(4 - \frac{\sin\left(\frac{\pi \times 4}{2}\right)}{\left(\frac{\pi}{2}\right)}\right) - (0 - 0)\right]$$

$$x = \frac{800}{\pi} \qquad \therefore x = 254.65 \text{ mm}$$

Problem 43

A particle is moving in a direction of a given line AB starting from rest at point A with an initial acceleration of 10 m/s^2. The acceleration is uniformly reduced continuously with the time t elapsed and is zero at $t = 5$ s. **(i)** Determine the distance travelled and the velocity after 5 s from the start and **(ii)** Compute the maximum distance travelled in its initial direction of motion.

Solution

$$\text{Slope} = \frac{0-10}{5-0} = -2$$

$$y = mx + c$$

$$m = -2,\ x = t,\ c = 10$$

$$\therefore\ a = -2t + 10$$

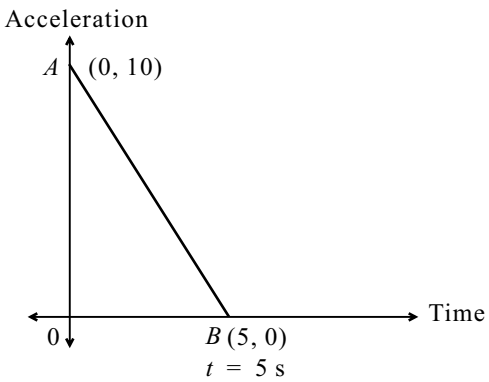

Fig. 10.43

(i) $a = -2t + 10$

$$\frac{dv}{dt} = -2t + 10$$

$$\therefore\ dv = (-2t + 10)\,dt$$

Integrating both sides, we get

$$\int dv = \int (-2t + 10)\,dt$$

$$\therefore\ v = -\frac{2t^2}{2} + 10t + c_1$$

$$v = -t^2 + 10t + c_1$$

At rest, $t = 0$ and $v = 0 \Rightarrow 0 = 0 + c_1 \quad \therefore\ c_1 = 0$

$$\therefore\ v = -t^2 + 10t$$

$$\frac{ds}{dt} = -t^2 + 10t$$

$$ds = (-t^2 + 10t)\,dt$$

Integrating both sides, we get

$$\int ds = \int (-t^2 + 10t)\,dt$$

$$s = -\frac{t^3}{3} + \frac{10t^2}{3} + c_2 = -\frac{t^3}{3} + 5t^2 + c_2$$

At $t = 0,\ s = 0,\ c_2 = 0 \quad \therefore\ s = -\frac{t^3}{3} + 5t^2$

At $t = 5$ s

$$a = -2(5) + 10$$

$$a = 0$$

At $t = 5$ s

$$v = -(5)^2 + 10(5)$$

$$v = 25 \text{ m/s}$$

At $t = 5$ s $\quad s = -\frac{5^3}{3} + 5(5)^2 = 83.33$ m

(ii) For $v = 0$

$0 = -t^2 + 10t$, i.e., $t(t - 10) = 0 \quad \therefore\ t = 10$ s

At $t = 10$ s

$$s = -\frac{10^3}{3} + 5(10)^2 \qquad \therefore\ s = 166.67 \text{ m}$$

Problem 44

A particle in a straight line has an acceleration $a = \sqrt{v}$. Its displacement and velocity at time $t = 2$ s are $s = \left(\frac{128}{3}\right)$ m and $v = 16$ m/s. Find the displacement, velocity and acceleration of the particles when $t = 3$ s.

Solution

$$a = \sqrt{v} \qquad .....(I)$$

$$\frac{dv}{dt} = \sqrt{v}$$

$$\int \frac{1}{\sqrt{v}}\, dv = \int dt \Rightarrow 2\int \frac{1}{2\sqrt{v}}\, dv = \int dt$$

$$2\sqrt{v} = t + c_1$$

At $t = 2$ s, $v = 16$ m/s

$$2\sqrt{16} = 2 + c_1 \quad \therefore \quad c_1 = 6$$

$$2\sqrt{v} = t + 6$$

Squaring both sides, we get

$$4v = (t+6)^2 \qquad .....(II)$$

$$4\frac{ds}{dt} = (t+6)^2$$

$$\int ds = \frac{1}{4}\int (t+6)^2\, dt$$

$$s = \frac{(t+6)^3}{4 \times 3} + c_2 = \frac{(t+6)^3}{12} + c_2$$

At $t = 2$ s, $s = \left(\frac{128}{3}\right)$ metres

$$\frac{128}{3} = \frac{(2+6)^3}{12} + c_2 \qquad \therefore \quad c_2 = 0$$

$$s = \frac{(t+6)^3}{12} \qquad .....(III)$$

At $t = 3$ s,

$s = \frac{(t+6)^3}{12}$	$4v = (t+6)^2$	$a = \sqrt{v}$
$s = \frac{(3+6)^3}{12}$	$v = \frac{(3+6)^2}{4}$	$a = \sqrt{20.25}$
$s = 60.75$ m	$v = 20.25$ m/s	$a = 4.5$ m/s^2

Problem 45

The acceleration 'a' of a particle in m/s^2 is governed the law $a = b - ct^2$ where t is in seconds, while b and c constants. The particle has initially a velocity of 6 m/s within 1 minute thereafter it covers a distance 900 m and acquires a velocity of 20 m/s. Determine the constants b and c.

Solution

$$a = b - ct^2$$

$$\frac{dv}{dt} = b - ct^2 \qquad \therefore \int dv = \int (b - ct^2)\, dt$$

$$v = bt - \frac{ct^3}{3} + c_1$$

At $t = 0$, $v = 6$ m/s

$$6 = 0 + c_1 \qquad \therefore c_1 = 6$$

$$\therefore v = bt - \frac{ct^3}{3} + 6$$

At $t = 60$ s, $v = 20$ m/s and $s = 900$ m

$$20 = b(60) - \frac{c(60)^3}{3} + 6 \qquad \therefore b = \frac{14 + 72000\,c}{60} \qquad \text{.....(I)}$$

$$v = bt - \frac{ct^3}{3} + 6$$

$$\frac{ds}{dt} = bt - \frac{ct^3}{3} + 6 \qquad \therefore \int ds = \int \left(bt - \frac{ct^3}{3} + 6\right) dt$$

$$s = \frac{bt^2}{2} - \frac{ct^4}{12} + 6t + c_2$$

At $t = 0$, $s = 0$ we get $c_2 = 0$

$$s = \frac{bt^2}{2} - \frac{ct^4}{12} + 6t$$

$$900 = \frac{b(60)^2}{2} - \frac{c(60)^4}{12} + 6(60)$$

$$540 = 1800b - 1080000c$$

Substituting b from Eq. (I),

$$540 = \left[\frac{14 + 72000c}{60}\right] \times 1800 - 1080000c$$

$$540 = 420 + 2160000c - 1080000c \qquad \therefore c = 1.1111 \times 10^{-4}$$

$$b = \frac{14 + 72000c \times (1.1111 \times 10^{-4})}{60} \qquad \therefore b = 0.367$$

$$\therefore b = 0.367, \quad c = 1.1111 \times 10^{-4}$$

Problem 46

The acceleration of a particle is defined by the relation $a = -\frac{k}{x}$. It is known that velocity 'v' is 5 m/s when displacement 'x' is 200 mm and v = 3 m/s at x = 400 mm. Find velocity of a particle at x = 500 mm. Also find position of the particle at which velocity is zero.

Solution

$$a = -\frac{k}{x}$$

$$\therefore \; v \cdot \frac{dv}{dx} = -\frac{k}{x}$$

$$\left(\frac{-k}{x}\right) dx = v \cdot dv$$

$$-k \int \frac{1}{x} \, dx = \int v \cdot dv$$

$$-k \cdot \log_e (x) = \frac{v^2}{2} + c_1$$

Given: $x = 0.2$ m, $v = 5$ m/s and $x = 0.4$ m, $v = 3$ m/s

$$\therefore \; -k \cdot \log_e (0.2) = \frac{5^2}{2} + c_1 \qquad \text{.... (I)}$$

$$-k \cdot \log_e (0.4) = \frac{3^2}{2} + c_1 \qquad \text{.... (II)}$$

Solving Eqs. (I) and (II), we get

$$-k \cdot \ln(0.2) - [-k \cdot \ln(0.4)] = \left(\frac{25}{2} + c_1\right) - \left(\frac{9}{2} + c_1\right)$$

$$k\,[\ln(0.4) - \ln(0.2)] = \frac{25}{2} - \frac{9}{2}$$

$$k \ln\left(\frac{0.4}{0.2}\right) = 8$$

$$k = 11.542, \; c_1 = 6.076$$

Hence,

$$-(11.542)\,[\ln(x)] = \frac{v^2}{2} + 6.076$$

At $x = 0.5$, we get, $v = 1.962$ m/s

When $v = 0$, we have

$$-(11.542) \times \ln(x)] = 0 + 6.076$$

$$\ln(x) = -\frac{6.076}{11.542}$$

$$\therefore \; x = e^{\left(\frac{-6.076}{11.542}\right)}$$

$$\therefore \; x = 0.591 \text{ m}$$

Problem 47

Acceleration of a ship, moving along a straight course, varies directly as the square of its speed. If the speed drops from 3 m/s to 1.5 m/s in one minute. Find the distance moved in this period.

Solution

$$a \;\alpha\; v^2$$

$$a = \frac{dv}{dt} = kv^2$$

$$\frac{dv}{v^2} = k \cdot dt$$

$$\int \frac{dv}{v^2} = k \cdot \int dt$$

$$-\frac{1}{v} = kt + c_1$$

At $t = 0,\ v = 3$ m/s $\quad \Rightarrow \quad -\frac{1}{3} = c_1$

$$\therefore\ -\frac{1}{v} = kt - \frac{1}{3}$$

At $t = 60$ s, $v = 1.5$ m/s

$$-\frac{1}{1.5} = 60k - \frac{1}{3} \qquad \therefore\ k = -\frac{1}{180}$$

$$\therefore\ a = -\frac{1}{180}\, v^2$$

$$\therefore\ v \cdot \frac{dv}{dx} = -\frac{1}{180}\, v^2$$

$$\therefore\ \frac{dv}{v} = -\frac{1}{180}\, dx$$

$$\int \frac{dv}{v} = -\frac{1}{180} \int dx$$

$$\log v = -\frac{1}{180}\, x + c_2$$

When $x = 0,\ v = 3$

$$\log 3 = 0 + c_2 \qquad \therefore\ c_2 = \log 3$$

$$\log v = -\frac{1}{180}\, x + \log 3$$

When $v = 1.5$ m/s, x is the required distance.

$$\log 1.5 = -\frac{1}{180}\, x + \log 3$$

$$\frac{x}{180} = \log 3 - \log 1.5 \qquad \therefore\ x = 124.77 \text{ m}$$

Distance moved by the ship $= 124.77$ m

Problem 48

A rope of length L connects the wheel A and the weight B, directed vertically down, by passing over a pulley of negligible size at C as shown in Fig. 10.48. At the instant when $x = 3$ m, the centre of wheel A has a velocity of 3 m/s and an acceleration of 1.2 m/s^2, both rightwards. What is then the velocity and acceleration of B?

Solution

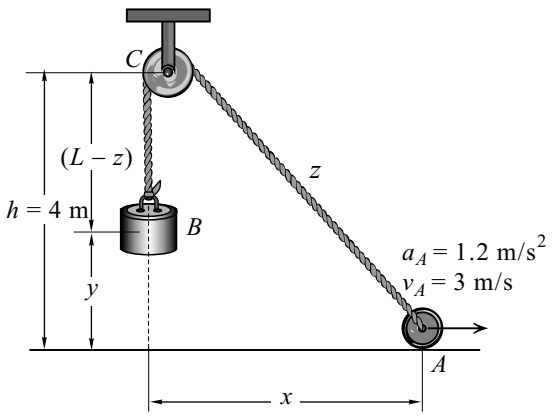

Fig. 10.48(a)

Given: $v_A = 3$ m/s, $a_A = 1$ m/s^2

$$y + L - z = 4$$

Differentiating w.r.t. t, we get

$$\frac{dy}{dt} - \frac{dz}{dt} = 0$$

$$\frac{dy}{dt} = \frac{dz}{dt} = v_B$$

$$\therefore \quad \frac{dv_B}{dt} = a_B$$

Also $\dfrac{dx}{dt} = v_A$; $\dfrac{dv_A}{dt} = a_A$

$$x^2 + 4^2 = z^2 \qquad \text{..... (I)}$$

Differentiating w.r.t. t, we get

$$2x \frac{dx}{dt} = 2z \frac{dz}{dt}$$

$$x\, v_A = z\, v_B \qquad \text{..... (II)}$$

Differentiating w.r.t. t, we get

$$x \frac{dv_A}{dt} + v_A \frac{dx}{dt} = z \frac{dv_B}{dt} + v_B \frac{dz}{dt}$$

$$x\, a_A + v_A^2 = z\, a_B + v_B^2 \qquad \text{..... (III)}$$

At $x = 3$, from Eq. (I), $z = 5$ m

From Eq. (II), $v_B = 1.8$ m/s

From Eq. (III), $a_B = 1.872$ m/s^2

Alternate Solution (Mathematical Method)

At $x = 3$ m

$$\frac{dx}{dt} = 3 \text{ m/s}$$

$$\frac{d^2x}{dt^2} = 1.2 \text{ m/s}^2$$

Given: Pulley is of negligible size, hence assume the triangle.

$z^2 = x^2 + h^2 = x^2 + 4^2$

When $x = 3$ m, $h = 4$ m

$z = 5$ m

$\therefore\ h = (L - z) + y$

Differentiating both sides w.r.t t, we get

$$0 = \left(0 - \frac{dz}{dt}\right) + \frac{dy}{dt}$$

$$\frac{dy}{dt} = \frac{dz}{dt}$$

$$\therefore\ \frac{d^2y}{dt^2} = \frac{d^2z}{dt^2} \qquad \text{... (I)}$$

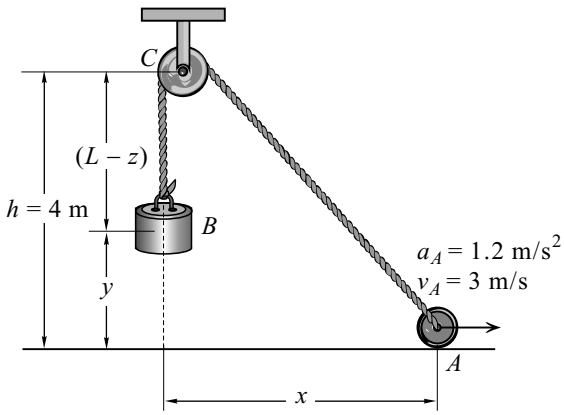

Fig. 10.48(b)

$x^2 + 4^2 = z^2$

Differentiating both sides w.r.t t, we get

$$(2x) \cdot \frac{dx}{dt} + 0 = 2z \cdot \frac{dz}{dt}$$

$$\therefore\ x \cdot \frac{dx}{dt} = z \cdot \frac{dz}{dt}$$

$$(3) \cdot (3) = (5) \cdot \frac{dz}{dt}$$

$$\therefore\ \frac{dz}{dt} = \frac{9}{5}$$

$$\frac{dz}{dt} = 1.8 \text{ m/s}^2 \qquad \text{i.e. } v = 1.8 \text{ m/s}^2$$

Again consider

$$x \cdot \frac{dx}{dt} = z \cdot \frac{dz}{dt}$$

Differentiating both sides w.r.t. t, we get

$$x \cdot \frac{d^2x}{dt^2} + \frac{dx}{dt} \cdot \frac{dx}{dt} = z \cdot \frac{d^2z}{dt^2} + \frac{dz}{dt} \cdot \frac{dz}{dt}$$

$$(3) \cdot (1.2) + (3) \cdot (3) = 5 \cdot \frac{d^2z}{dt^2} + (1.8)\,(1.8)$$

$$\frac{d^2z}{dt^2} = 1.872 \text{ m/s}^2 = \text{Acceleration}$$

Referring to Eq. (I), we get

$$\frac{d^2z}{dt^2} = \frac{d^2y}{dt^2} = 1.872 \text{ m/s}^2$$

Problem 49

A lady of height h = 1.8 m stands at a distance of a = 4 m from a lamp, which is suspended from the top as shown in Fig. 10.49. The lamp is lowered down at a uniform velocity of 1 m/s. Find the velocity and acceleration of the tip of the lady's shadow when the lamp is at a height of 3 m above the ground.

Solution

Let v_S = Velocity of tip of the lady's shadow $\left(\dfrac{dx}{dt} = v_S\right)$

a_S = Acceleration of tip of the lady's shadow $\left(\dfrac{dv_S}{dt} = a_S\right)$

v_L = Velocity of lamp $\left(\dfrac{dy}{dt} = v_L = -1 \text{ m/s}\right)$

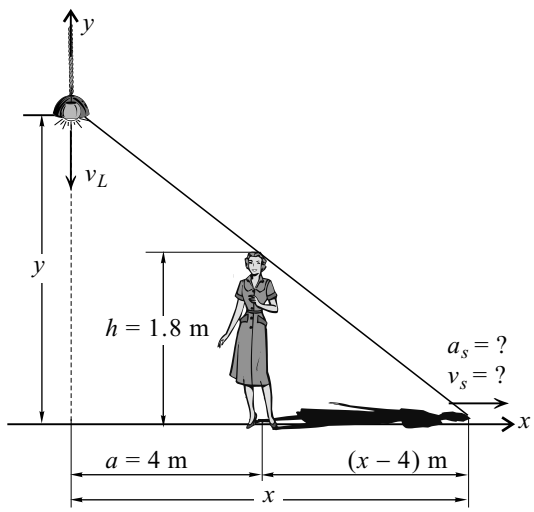

Fig. 10.49

From Fig. 10.49,

$$\frac{x}{y} = \frac{x-4}{1.8}$$

$$1.8x = xy - 4y \qquad \text{..... (I)}$$

Differentiating w.r.t. t, we get

$$1.8\frac{dx}{dt} = x\frac{dy}{dt} + y\frac{dx}{dt} - 4\frac{dy}{dt}$$

$$1.8\,v_S = x\,v_L + y\,v_S - 4\,v_L \qquad \text{..... (II)}$$

Differentiating w.r.t. t, we get

$$1.8\frac{dv_S}{dt} = \frac{dx}{dt}v_L + y\frac{dv_S}{dt} + v_S\frac{dy}{dt}$$

$$1.8\,a_S = v_S v_L + y\,a_S + v_S v_L$$

$$1.8\,a_S = 2v_S v_L + y\,a_S \qquad \text{..... (III)}$$

When y = 3 m, from Eq. (I),

$$1.8\,x = (x)(3) - 4(3)$$

$$\therefore x = 10 \text{ m}$$

From Eq. (II),

$$1.8\,v_S = (10)(-1) + (3)(v_S) - (4)(-1)$$

$$\therefore v_S = 5 \text{ m/s}$$

From Eq. (III),

$$1.8\,a_S = (2)(5)(-1) + (3)(a_S)$$

$$\therefore a_S = 8.33 \text{ m/s}^2$$

Alternate Solution (Mathematical Method)

$$\frac{y}{a+x} = \frac{h}{x}$$

At $y = 3\text{m}$

$$y = h\left(1 + \frac{4}{x}\right)$$

$$\frac{dy}{dt} = -1 \text{ m/s}$$

$$3 = 1.8\left(1 + \frac{4}{x}\right)$$

$$\frac{d^2y}{dt^2} = 0$$

$$\therefore \; x = 6 \text{ m}$$

$$y = h\left(1 + \frac{9}{x}\right)$$

Differentiating w.r.t. t, we get

$$\frac{dx}{dt} = h\left[0 + a\left(-\frac{4}{x}\right)\cdot\frac{dx}{dt}\right]$$

$$-1 = h\left[-\frac{a}{x^2}\right]\cdot\frac{dx}{dt}$$

$$\therefore \; \frac{dx}{dt} = \frac{x^2}{ah}$$

$$\frac{dx}{dt} = \frac{(6)^2}{4 \times 1.8}$$

$$v = \frac{dx}{dt} = 5 \text{ m/s}$$

Again differentiating w.r.t. t, we get

$$\frac{dy}{dt} = -\frac{ah}{x^2}\cdot\frac{dx}{dt}$$

$$\frac{d^2y}{dt^2} = -ah\,.\left[\frac{1}{x^2}\cdot\frac{dx}{dt}\right]$$

$$\therefore \; \frac{d^2y}{dt^2} = -ah\,.\left[\frac{1}{x^2}\cdot\frac{d^2x}{dt^2} + \frac{dx}{dt}\cdot(-2)x^{-3}\cdot\frac{dx}{dt}\right]$$

$$\therefore \; 0 = -4 \times 1.8\left[\frac{1}{6^2}\cdot\frac{d^2x}{dt^2} + (-2)\,\frac{1}{6^3}\times(5)^2\right]$$

$$\therefore \; \frac{d^2x}{dt^2} = a = 8.33 \text{ m/s}^2$$

Solved Problems Based on Motion Diagram (Graphical Solution)

Problem 50

Figure 10.50(a) shows a diagram of acceleration versus time for a particle moving along X-axis for a time interval of 0 to 40 s. For the same time interval plot **(i)** the velocity time diagram, and **(ii)** the displacement time diagram and, hence, find the maximum speed attained and maximum distance covered by the particle during the interval.

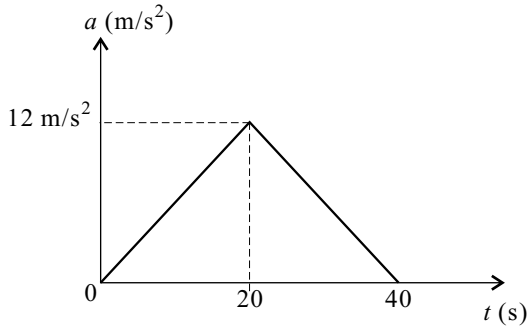

Fig. 10.50(a)

Solution

(i) Velocity-Time diagram

Change in velocity = Area under a-t diagram

(a) At $t = 20$ s

$$v_{20} - v_0 = \frac{1}{2} \times 20 \times 12$$

$$v_{20} = 120 \text{ m/s} \qquad (\because v_0 = 0)$$

(b) At $t = 40$ s

$$v_{40} - v_{20} = \frac{1}{2} \times 20 \times 12$$

$$v_{40} = 120 + 120$$

$$v_{40} = 240 \text{ m/s}$$

(ii) Displacement-Time diagram

Method I : Finding displacement

Change in displacement = Area under v-t diagram

(a) At $t = 20$ s

$$s_{20} - s_0 = \frac{1}{3} \times 20 \times 120$$

$$s_{20} = 800 \text{ m} \qquad (\because s_0 = 0)$$

(b) At $t = 40$ s

$$s_{40} - s_{20} = 20 \times 120 + \frac{2}{3} \times 20 \times 120$$

$$s_{40} = 800 + 20 \times 120 + \frac{2}{3} \times 20 \times 120$$

$$s_{40} = 800 + 2400 + 1600$$

$$s_{40} = 4800 \text{ m}$$

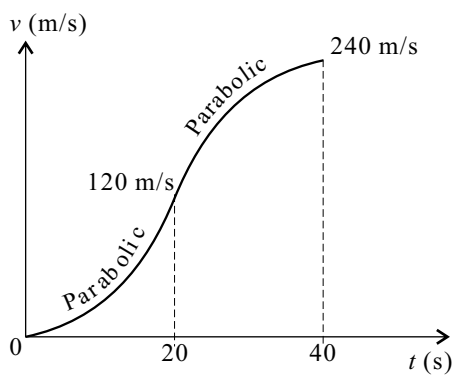

Fig. 10.50(b)

Method II : Finding displacement area moment

Change in displacement $= v_0 \times t +$ Moment of area under a-t diagram

(a) At $t = 20$ s

$$s_{20} - s_0 = v_0 \times t + \frac{1}{2} \times 20 \times 12 \times \frac{1}{3} \times 20$$

$$s_{20} = 800 \text{ m} \qquad (\because s_0 = 0, v_0 = 0)$$

(b) At $t = 40$ s

$$s_{40} - s_{20} = v_{20} \times t + \frac{1}{2} \times 20 \times 12 \times \frac{2}{3} \times 20$$

$$s_{40} = 800 + 120 \times 20 + 1600$$

$$s_{40} = 800 + 2400 + 1600$$

$$s_{40} = 4800 \text{ m}$$

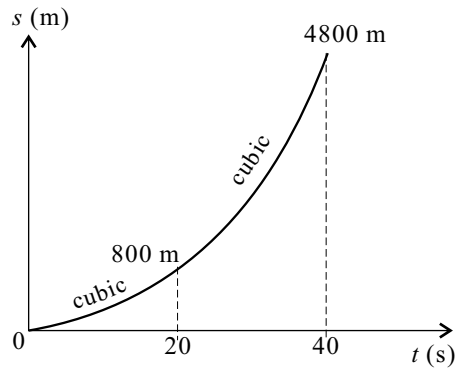

Fig. 10.50(c)

Problem 51

Figure 10.51(a) shows acceleration versus time diagram for a particle moving along x-axis. Draw velocity-time diagram and displacement-time diagram. Find the speed and distance covered by the particle after 50 s. Also find the maximum speed and the time at which the speed is attained by the particle.

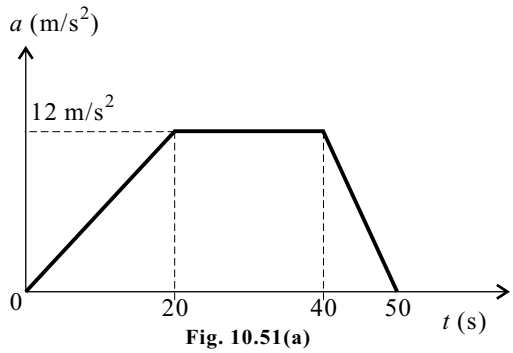

Fig. 10.51(a)

Solution

(i) Velocity-Time diagram

Change in velocity = Area under a-t diagram

(a) Velocity at 20 s

$$v_{20} - v_0 = \frac{1}{2} \times 20 \times 12 \quad (\because v_0 = 0)$$

$$v_{20} = 120 \text{ m/s}$$

(b) Velocity at 40 s

$$v_{40} - v_{20} = 20 \times 12$$

$$v_{40} = 120 + 20 \times 12 = 360 \text{ m/s}$$

(c) Velocity at 50 s

$$v_{50} - v_{40} = \frac{1}{2} \times 10 \times 12$$

$$v_{50} = 360 + 60 = 420 \text{ m/s}$$

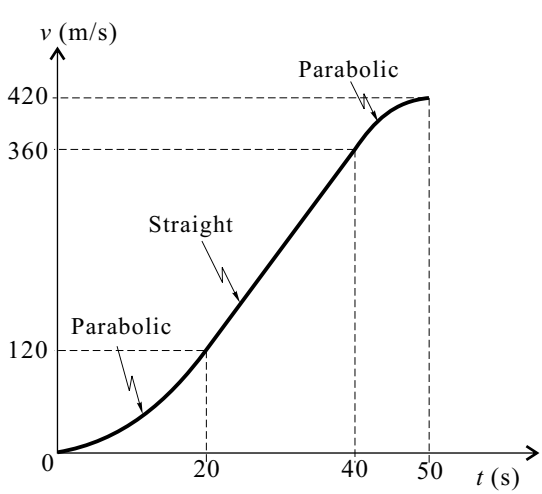

Fig. 10.51(b)

(ii) Displacement-Time diagram

Method I : Finding displacement

Change in displacement = Area under v-t diagram

(a) At $t = 20$ s

$$s_{20} - s_0 = \frac{1}{3} \times b \times h \quad (\because s_0 = 0)$$

$$s_{20} = \frac{1}{3} \times 20 \times 120$$

$$s_{20} = 800 \text{ m}$$

(b) At $t = 40$ s

$$s_{40} - s_{20} = \frac{1}{2}(120 + 360) \times 20$$

$$s_{40} = 800 + \frac{1}{2} \times 480 \times 20$$

$$s_{40} = 5600 \text{ m}$$

(c) At $t = 50$ s

$$s_{50} - s_{40} = (10 \times 360) + \left(\frac{2}{3} \times 10 \times 60\right)$$

$$s_{50} = 5600 + 3600 + 400$$

$$s_{50} = 9600 \text{ m}$$

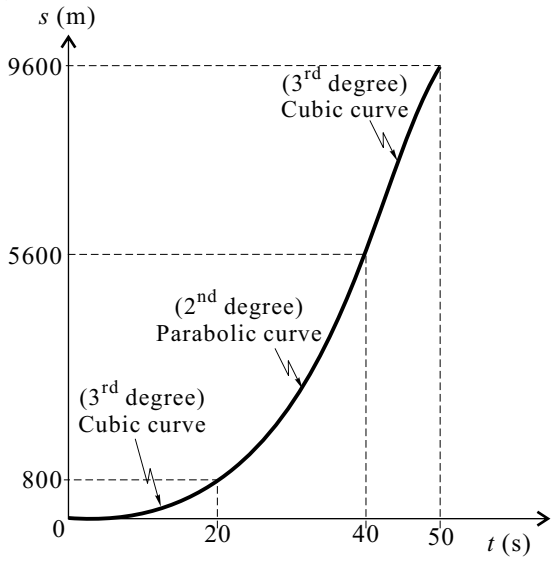

Fig. 10.51(c)

Maximum speed v_{50} = 420 m/s and maximum distance s_{50} = 9600 m

Method II : Finding displacement -area moment

Change in displacement = $v_0 \times t$ + Moment of area under a-t diagram

(a) At $t = 20$ s

$s_{20} - s_0 = v_0 \times t$ + Moment of area under a-t diagram between 0 and 20 about $t = 20$ s.

$$s_{20} - 0 = 0 \times 20 + \frac{1}{2} \times 20 \times 12 \times \frac{20}{3}$$

$$s_{20} = 800 \text{ m}$$

(b) At $t = 40$ s

$s_{40} - s_{20} = v_{20} \times 20$ + Moment of area under a-t diagram between 20 and 40 about $t = 40$ s.

$$s_{40} = 800 + 120 \times 20 + 20 \times 12 \times 10$$

$$s_{40} = 800 + 2400 + 2400 = 5600 \text{ m}$$

(c) At $t = 50$ s

$s_{50} - s_{40} = v_{40} \times 10$ + Moment of area under a-t diagram between 40 and 50 about $t = 50$ s.

$$s_{50} = 5600 + 360 \times 10 + \frac{1}{2} \times 10 \times 12 \times \frac{2}{3} \times 10$$

$$s_{50} = 5600 + 3600 + 400 = 9600 \text{ m}$$

Problem 52

The acceleration-time diagram for the linear motion is shown in Fig. 10.52(a). Construct velocity-time and displacement-time diagrams for the motion assuming that the motion starts with initial velocity of 5 m/s from the starting point.

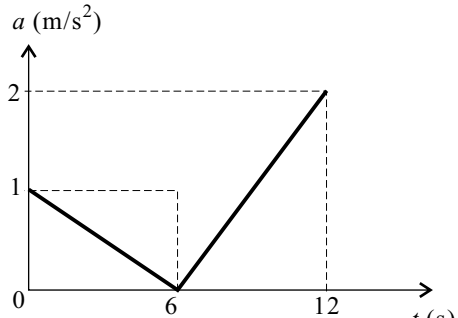

Fig. 10.52(a)

Solution

(i) Velocity-Time diagram

Change in velocity = Area under *a-t* diagram

(a) At $t = 6$ s

$$v_6 - v_0 = \frac{1}{2} \times 6 \times 1 \qquad (\because v_0 = 5 \text{ m/s})$$

$$v_6 = 5 + 3 = 8 \text{ m/s}$$

(b) At $t = 12$ s

$$v_{12} - v_6 = \frac{1}{2} \times 6 \times 2$$

$$v_{12} = 8 + \frac{1}{2} \times 6 \times 2 = 8 + 6$$

$$v_{12} = 14 \text{ m/s}$$

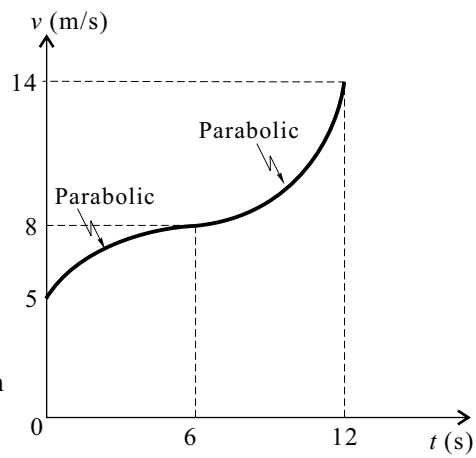

Fig. 10.52(b)

(ii) Displacement-Time diagram

Method I : Finding displacement

Change in displacement = Area under *v-t* diagram

(a) At $t = 6$ s

$$s_6 - s_0 = 6 \times 5 + \frac{2}{3} \times 6 \times 3 \qquad (\because s_0 = 0)$$

$$s_6 = 30 + 12 = 42 \text{ m}$$

(b) At $t = 12$ s

$$s_{12} - s_6 = 6 \times 8 + \frac{1}{3} \times 6 \times 6$$

$$s_{12} = 42 + 48 + 12 = 102 \text{ m}$$

Method II : Finding displacement -area moment

Change in displacement = $v_0 \times t$ + Moment of area under *a-t* diagram

(a) At $t = 6$ s

$s_6 - s_0 = v_0 \times t$ + Moment of area under *a-t* diagram between 0 to 6 about $t = 6$ s.

$$s_6 = 5 \times 6 + \frac{1}{2} \times 6 \times 1 \times \frac{2}{3} \times 6 \qquad (\because s_0 = 0,\ v_0 = 5 \text{ m/s})$$

$$s_6 = 30 + 12 = 42 \text{ m}$$

(b) At $t = 12$ s

$s_{12} - s_6 = v_6 \times t$ + Moment of area under *a-t* diagram between 6 to 12 about $t = 12$ s.

$$s_{12} = 42 + 8 \times 6 + \frac{1}{2} \times 6 \times 2 \times \frac{1}{3} \times 6$$

$$s_{12} = 42 + 48 + 12 = 102 \text{ m}$$

Problem 53

The acceleration-time diagram for the linear motion is shown in Fig. 10.53(a). Construct velocity-time and displacement-time diagrams for the motion assuming that the motion starts from rest.

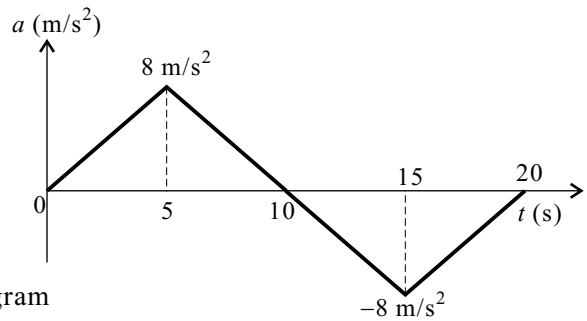

Fig. 10.53(a)

Solution

(i) Velocity-Time diagram

Change in velocity = Area under *a-t* diagram

(a) At $t = 5$ s

$$v_5 - v_0 = \frac{1}{2} \times 5 \times 8 \qquad (\because v_0 = 0)$$

$$v_5 = 20 \text{ m/s}$$

(b) At $t = 10$ s

$$v_{10} - v_5 = \frac{1}{2} \times 5 \times 8$$

$$v_{10} = 20 + 20 = 40 \text{ m/s}$$

(c) At $t = 15$ s

$$v_{15} - v_{10} = \frac{1}{2} \times 5 \times (-8)$$

$$v_{15} = 40 - 20 = 20 \text{ m/s}$$

(d) At $t = 20$ s

$$v_{20} - v_{15} = \frac{1}{2} \times 5 \times (-8)$$

$$v_{15} = 20 - 20$$

$$v_{15} = 0 \text{ m/s}$$

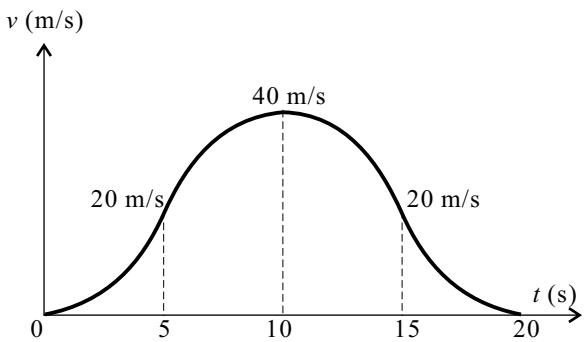

Fig. 10.53(b)

(ii) Displacement-Time diagram

Method I : Finding displacement

Change in displacement = Area under *v-t* diagram

(i) At $t = 5$ s

$$s_5 - s_0 = \frac{1}{3} \times 5 \times 20$$

$$s_5 = 33.33 \text{ m}$$

(ii) At $t = 10$ s

$$s_{10} - s_5 = 5 \times 20 + \frac{2}{3} \times 5 \times 20$$

$$s_{10} = 33.33 + 100 + 66.67$$

$$s_{10} = 200 \text{ m}$$

(iii) At $t = 15$ s

$$s_{15} - s_{10} = 5 \times 20 + \frac{2}{3} \times 5 \times 20$$

$$s_{15} = 200 + 100 + 66.67$$

$$s_{15} = 366.67 \text{ m}$$

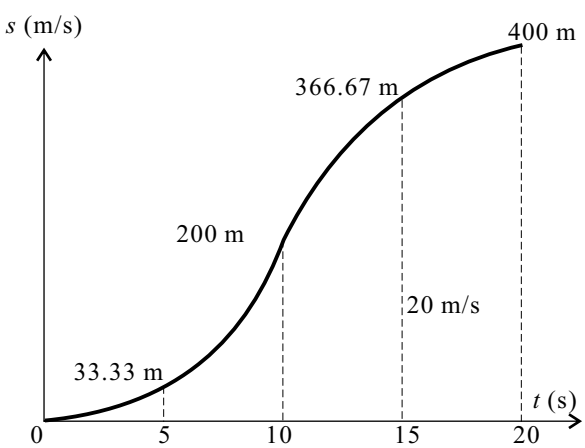

Fig. 10.53(c)

(d) At $t = 20$ s

$$s_{20} - s_{15} = \frac{1}{2} \times 5 \times 20$$

$$s_{20} = 366.67 + 33.33 = 400 \text{ m}$$

Method II : Finding displacement-area moment

Change in displacement $= v_0 \times t +$ Moment of area under a-t diagram

(a) At $t = 5$ s

$s_5 - s_0 = v_0 \times t +$ Moment of area under a-t diagram between 0 and 5 about $t = 5$ s.

$$s_5 = \frac{1}{2} \times 5 \times 8 \times \frac{1}{3} \times 5$$

$$s_5 = 33.33 \text{ m}$$

(b) At $t = 10$ s

$$s_{10} - s_5 = v_5 \times t + \frac{1}{2} \times 5 \times 8 \times \frac{2}{3} \times 5$$

$$s_{10} = 33.33 + 20 \times 5 + 66.67$$

$$s_{10} = 200 \text{ m}$$

(c) At $t = 15$ s

$$s_{15} - s_{10} = v_{10} \times t + \frac{1}{2} \times 5 \times (-8) \times \frac{1}{3} \times 5$$

$$s_{15} = 200 + 40 \times 5 - 33.33$$

$$s_{15} = 366.67 \text{ m}$$

(d) At $t = 20$ s

$$s_{20} - s_{15} = v_{15} \times t + \frac{1}{2} \times 5 \times (-8) \times \frac{2}{3} \times 5$$

$$s_{20} = 366.67 + 20 \times 5 - 66.67$$

$$s_{20} = 400 \text{ m}$$

Method III : Finding displacement-area moment method when initial velocity is zero

(a) At $t = 5$ s

$$s_5 = \frac{1}{2} \times 5 \times 8 \times \frac{1}{3} \times 5$$

$$s_5 = 33.33 \text{ m}$$

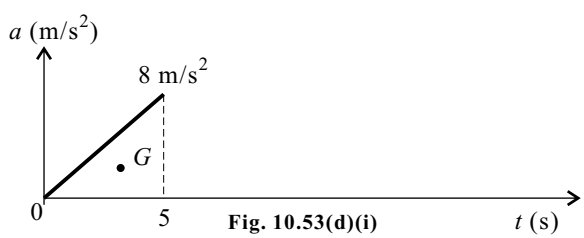

Fig. 10.53(d)(i)

(b) At $t = 10$ s

$$s_{10} = \frac{1}{2} \times 10 \times 8 \times 5$$

$$s_{10} = 200 \text{ m}$$

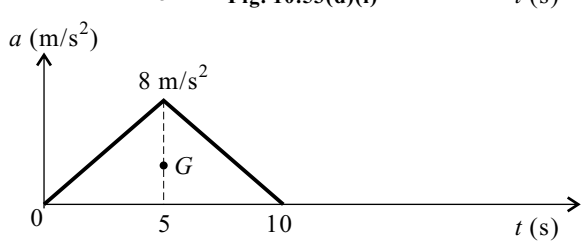

Fig. 10.53(d)(ii)

(c) At $t = 15$ s

$$s_{15} = \frac{1}{2} \times 10 \times 8 \times 10 + \frac{1}{2} \times 5 \times (-8) \times \frac{1}{3} \times 5$$

$$s_{15} = 400 - 33.33$$

$$s_{15} = 366.67 \text{ m}$$

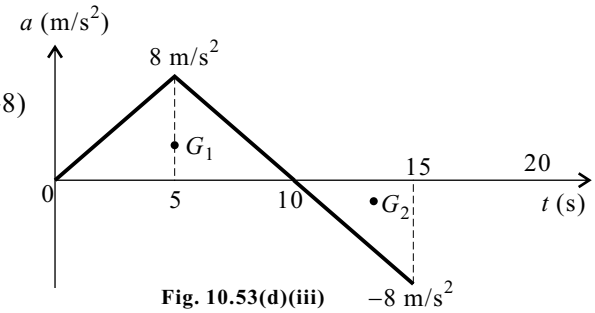

Fig. 10.53(d)(iii)

(d) At $t = 20$ s

$$s_{20} = \frac{1}{2} \times 10 \times 8 \times 15 + \frac{1}{2} \times 10 \times (-8) \times 5$$

$$s_{20} = 400 \text{ m}$$

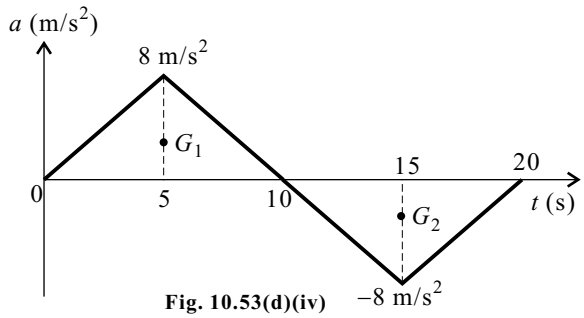

Fig. 10.53(d)(iv)

Problem 54

The motion of jet plane while travelling along a runway is defined by the *v-t* graph shown in Fig. 10.54(a). Construct the *s-t* and *a-t* graph for the motion. The plane starts from rest.

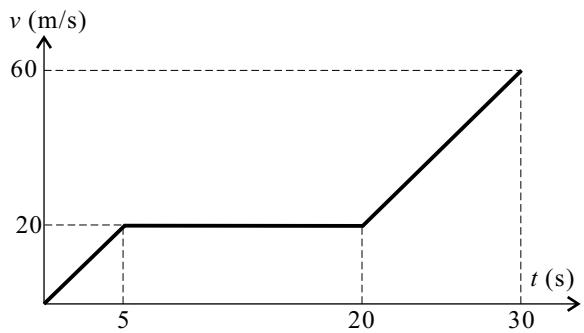

Fig. 10.54(a)

Solution

(i) Acceleration-Time diagram

Slope of *v-t* diagram = Acceleration

(a) At $t = 0$

$$\text{Slope} = a = \frac{20}{5} = 4 \text{ m/s}^2$$

(b) Just before $t = 5$ s

$$\text{Slope} = a = \frac{20}{5} = 4 \text{ m/s}^2$$

Just after $t = 5$ s

Slope = $a = 0$ (Horizontal line)

(c) Just before $t = 20$ s

Slope = $a = 0$

Just after $t = 20$ s

$$\text{Slope} = a = \frac{40}{10} = 4 \text{ m/s}^2$$

(d) At $t = 30$ s

$$\text{Slope} = a = \frac{40}{10} = 4 \text{ m/s}^2$$

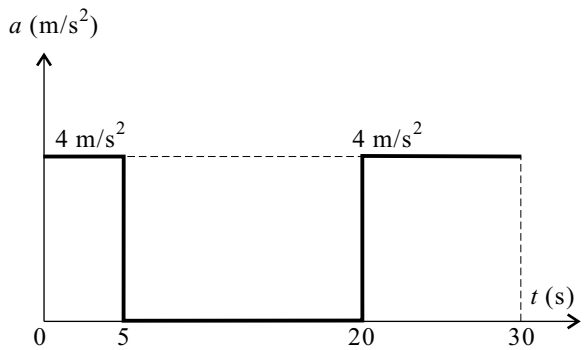

Fig. 10.54(b)

(ii) Displacement-Time diagram

Change in displacement = Area under v-t diagram

(a) At $t = 0$, $s = 0$

(b) At $t = 5$ s

$s_5 - s_0 = \frac{1}{2} \times 5 \times 20$

$s_5 = 50$ m

(c) At $t = 20$ s

$s_{20} - s_5 = 15 \times 20$

$s_{20} = 50 + 300$

$s_{20} = 350$ m

(d) At $t = 30$ s

$s_{30} - s_{20} = \frac{1}{2} \times (20 + 60) \times 10$

$s_{30} = 350 + 400$

$s_{30} = 750$ m

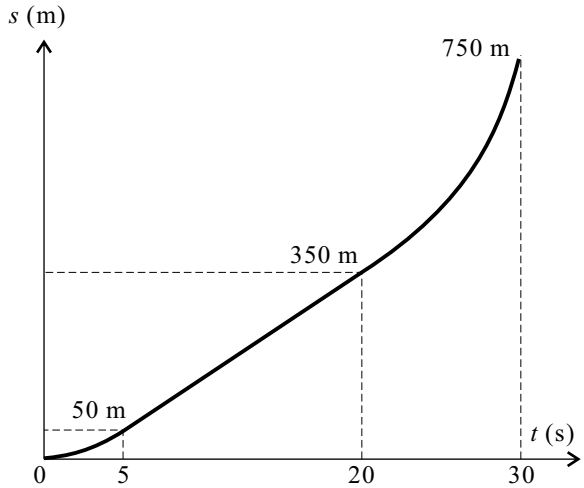

Fig. 10.54(c)

Problem 55

A particle moving with a velocity of 7.5 m/s is subjected to a retarding force which gives it a negative acceleration varying with time as shown in Fig. 10.55(a). For the first 3 seconds, after 3 s the acceleration remaining constant. Plot the v-t diagram for 6 seconds travel of the particle. Determine the distance travelled by the particle from its position $t = 0$ to $t = 6$ s.

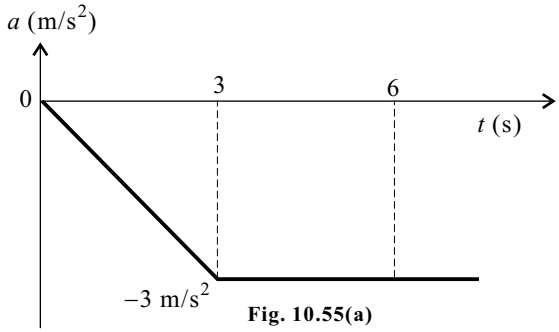

Fig. 10.55(a)

Solution

(i) Velocity-Time diagram

Change in velocity = Area under a-t diagram

(a) At $t = 3$ s

$v_3 - v_0 = \frac{1}{2} \times 3 \times (-3)$

$v_3 = 7.5 - 4.5 \quad (\because v_0 = 7.5 \text{ m/s})$

$v_3 = 3$ m/s

(b) At $t = 6$ s

$v_6 - v_3 = 3 \times (-3)$

$v_6 = 3 - 9 = -6$ m/s

By property of similar Δ, we have

$\frac{3}{6} = \frac{d}{3 - d}$

$\therefore \quad 3(3 - d) = 6d$

$9 - 3d = 6d$

$9 = 9d \qquad \therefore \quad d = 1$

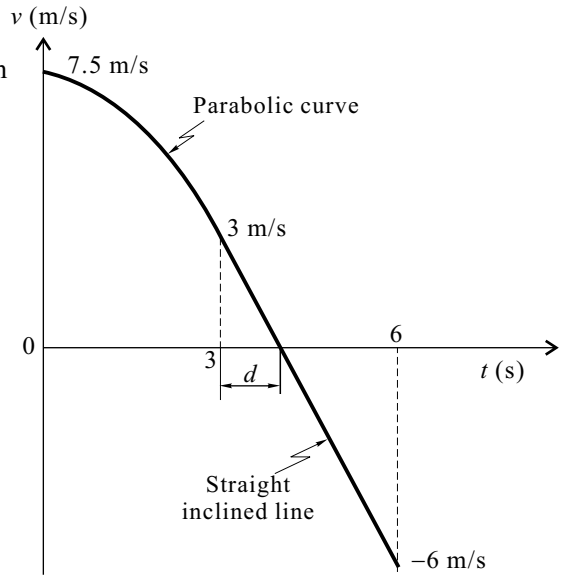

Fig. 10.55(b)

(ii) Displacement-Time diagram

Change in displacement = Area under v-t diagram

(a) At $t = 3$ s

$$s_3 - s_0 = 3 \times 3 + \frac{2}{3} \times 3 \times 4.5$$

$$s_3 = 9 + 9 = 18 \text{ m}$$

(b) At $t = 4$ s (Straight inclined line intersecting t axis $\because$ $d = 1$)

$$s_4 - s_3 = \frac{1}{2} \times 1 \times 3$$

$$s_4 = 18 + 1.5 = 19.5 \text{ m}$$

(c) At $t = 6$ s

$$s_6 - s_4 = \frac{1}{2} \times 2 \times (-6)$$

$$s_6 = 19.5 - 6$$

$$s_6 = 13.5 \text{ m}$$

Distance travelled by particle from $t = 0$ to $t = 6$ s

$$D = 19.5 + \frac{1}{2} \times 2 \times 6$$

$$D = 19.5 + 6$$

$$D = 25.5 \text{ m}$$

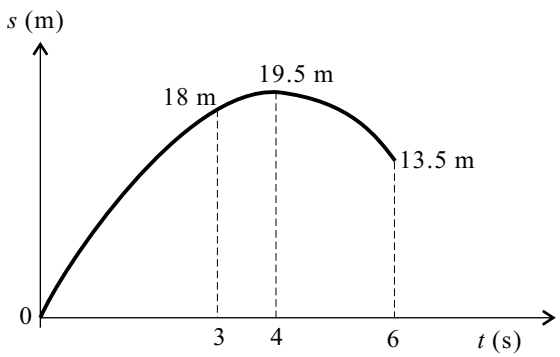

Fig. 10.55(c)

Problem 56

A particle is moving along a straight path variation of its position with respect to time is shown in s-t graph in Fig. 10.56(a). Draw v-t and a-t curve.

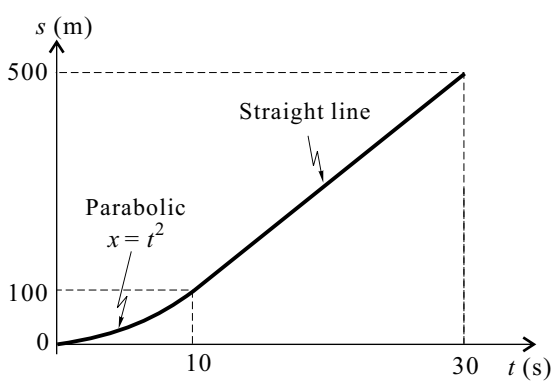

Fig. 10.56(a)

Solution

(i) $t = 0$ to $t = 10$ s

$$x = t^2$$

Differentiating w.r.t. t

$$v = 2t\,;\ v_0 = 0\,,\ v_{10} = 20 \text{ m/s}$$

Differentiating w.r.t. t

$$a = 2 \text{ m/s}^2$$

(ii) $t = 10$ s to $t = 30$ s

Straight-line equation

$$y = m\,x + c$$

$$s = m\,t + c$$

Slope $m = \dfrac{400}{20} = 20$

We know at $t = 10$ s, $s = 100$ m

$\therefore\ 100 = 20 \times 10 + c$

$\therefore\ c = -100$

From straight-line equation, we get

$s = 20t - 100$

Differentiating w.r.t. t

$v = 20$ m/s

Again, differentiating w.r.t. t

$a = 0$ m/s^2

(iii) *v-t* Graph

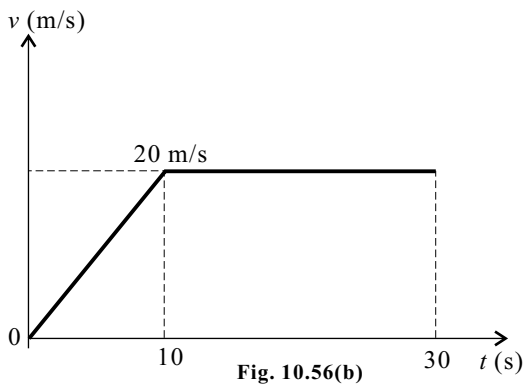

Fig. 10.56(b)

(iv) *a-t* Graph

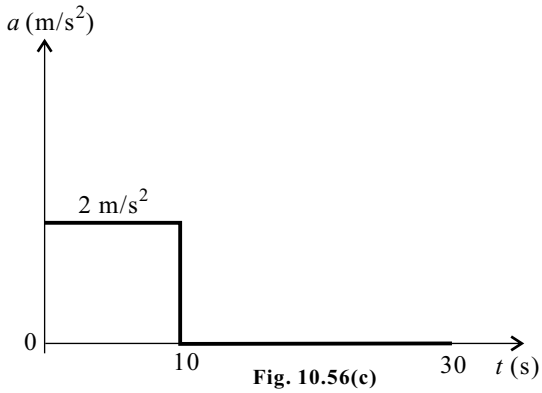

Fig. 10.56(c)

Problem 57

A particle is moving along a straight path. With an acceleration shown in the *a-t* graph in Fig.10.57(a), draw *v-t* and *s-t* graph. Find maximum velocity in the time interval and the distance travelled by the particle in the time interval.

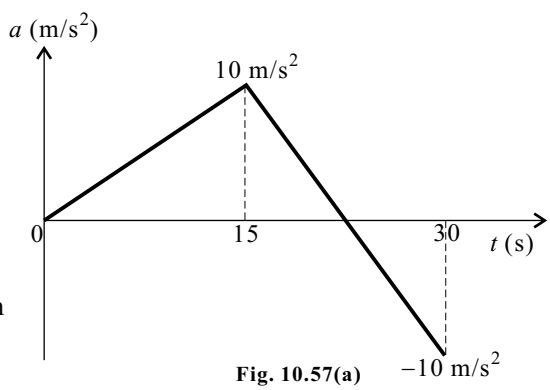

Fig. 10.57(a)

Solution

(i) Velocity-Time diagram

Change in velocity = Area under *a-t* diagram

(a) At $t = 15$ s

$v_{15} - v_0 = \frac{1}{2} \times 15 \times 10$

$v_{15} = 75$ m/s $\qquad (\because v_0 = 0)$

(b) Intersecting of inclined line with t axis will be the mid-point between 15 to 30 by property of triangle.

$\therefore\ t = 15 + 7.5 = 22.5$ s at t axis intercept.

At $t = 22.5$ s

$v_{22.5} - v_{15} = \frac{1}{2} \times 7.5 \times 10$

$v_{22.5} = 75 + 37.5$

$v_{22.5} = 112.5$ m/s

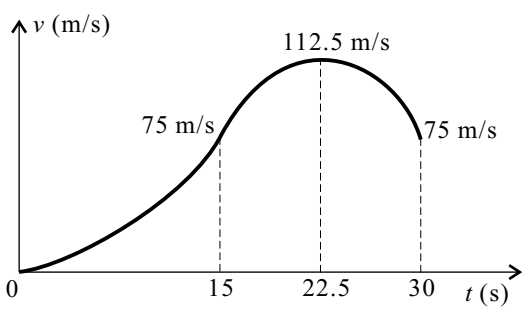

Fig. 10.57(b)

(c) At $t = 30$ s

$$v_{30} - v_{22.5} = \frac{1}{2} \times 7.5 \times (-10)$$

$$v_{30} = 112.5 - 37.5 = 75 \text{ m}$$

(ii) Displacement-Time diagram

Change in displacement = Area under v-t diagram

(a) At $t = 15$ s

$$s_{15} - s_0 = \frac{1}{3} \times 15 \times 75 \qquad (\because s_0 = 0)$$

$$s_{15} = 375 \text{ m}$$

(b) At $t = 22.5$ s

$$s_{22.5} - s_{15} = 7.5 \times 75 + \frac{2}{3} \times 7.5 \times 37.5$$

$$s_{22.5} = 375 + 562.5 + 187.5$$

$$s_{22.5} = 1125 \text{ m}$$

(c) At $t = 30$ s

$$s_{30} - s_{22.5} = 7.5 \times 75 + \frac{2}{3} \times 7.5 \times 37.5$$

$$s_{30} = 1125 + 562.5 + 187.5 = 1875 \text{ m}$$

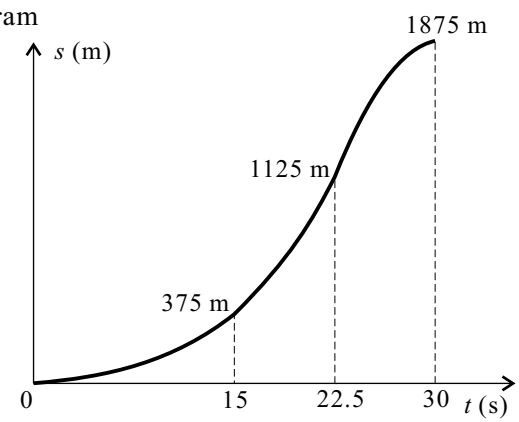

Fig. 10.57(c)

Maximum velocity attained by particle $v_{max} = 112.5$ m/s

Displacement = Distance travelled because velocity is throughout position.

So particle is moving in the same direction. $\therefore$ Distance travelled $d = 1875$ m.

Problem 58

A v-s graph is given in Fig. 10.58(a). Find the velocity and acceleration at $s = 50$ m and $s = 150$ m.

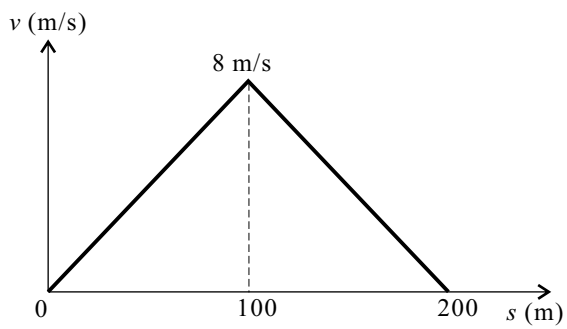

Fig. 10.58(a)

Solution

From property of similarity of triangle shown in Fig. 10.58(b).

At $s = 50$ m and $s = 150$ m ; $v = 4$ m/s

We know $a = v\dfrac{dv}{ds}$. $\dfrac{dv}{ds}$ is the slope of v-s diagram

At $s = 50$ m, Slope $= \dfrac{dv}{ds} = \dfrac{4}{50}$

$$a = v\frac{dv}{ds} = 4 \times \frac{4}{50}$$

$$\therefore \; a = 0.32 \text{ m/s}^2$$

At $s = 150$ m, Slope $= \dfrac{dv}{ds} = \dfrac{-4}{50}$

$$a = v\frac{dv}{ds} = 4 \times \frac{-4}{50}$$

$$\therefore \; a = -0.32 \text{ m/s}^2$$

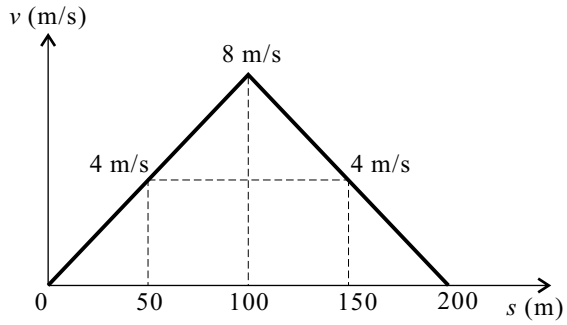

Fig. 10.58(b)

Problem 59

A car moves along a straight road such that its velocity is described by the graph shown in Fig. 10.59(a). For the first 10 s the velocity variation is parabolic and between 10 s and 30 s the variation is linear. Construct the *s-t* and *a-t* graphs for the time period $0 \le t \le 30$ s.

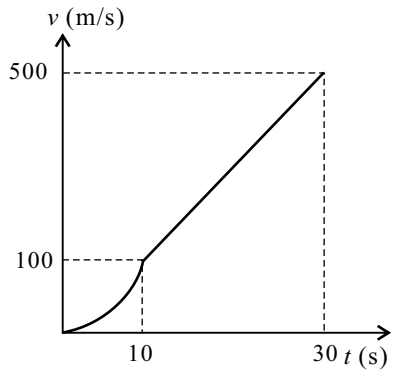

Fig. 10.59(a)

Solution

(i) Change in displacement = Area under *v-t* diagram

$$s_{10} - s_0 = \frac{1}{3} \times 10 \times 100$$

$$s_{10} = 333.33 \text{ m}$$

$$s_{30} - s_{10} = \frac{1}{2} \times (100 + 500) \times 20$$

$$s_{30} = 6000 + 333.33$$

$$s_{30} = 6333.33 \text{ m}$$

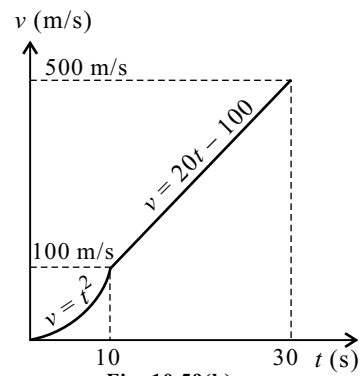

Fig. 10.59(b)

(ii) Acceleration = Slope of *v-t* diagram

$$a = \frac{400}{20} = 20 \text{ m/s}^2$$

(iii) From 0 to 10 s

$$y = mx + c$$

$$a = \frac{20}{10} \times t + 0$$

$$a = 2t \text{ m/s}^2$$

Integrating,

$$v = \frac{2t^2}{2} + c_1$$

At $t = 10$ s, $v = 100$ m/s

$$100 = \frac{2 \times 100^2}{2} + c_1$$

$$c_1 = 0$$

$$v = \frac{2t^2}{2} + c_1$$

Integrating,

$$s = \frac{t^3}{3} + c_3$$

At $t = 10$ s, $s = 333.33$ m

$$c_3 = 0$$

$$s = \frac{t^3}{3}$$

From 10 to 30 s

$$a = 20 \text{ m/s}^2$$

Integrating,

$$v = 20t + c_2$$

At $t = 10$ s, $v = 100$ m/s

$$100 = 2 \times 10 + c_2$$

$$c_2 = -100$$

$$v = 20t - 100$$

Integrating,

$$s = \frac{20t^2}{3} - 100t + c_4$$

At $t = 10$ s, $s = 333.33$ m

$$c_4 = 333.33$$

$$s = \frac{20t^2}{3} - 100t + 333.33$$

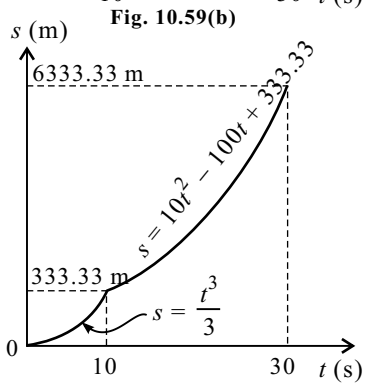

Fig. 10.59(c)

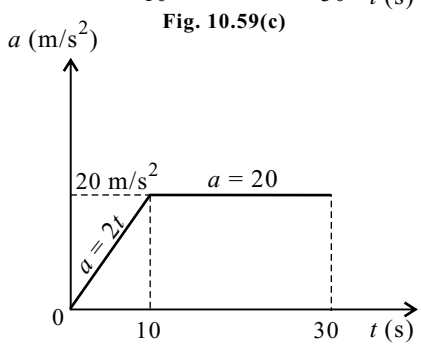

Fig. 10.59(d)

Problem 60

A particle moves in straight line with a velocity-time diagram shown in Fig. 10.60(a). Knowing that $s = -25$ m and $t = 0$, draw s-t and a-t diagram for $0 < t < 24$.

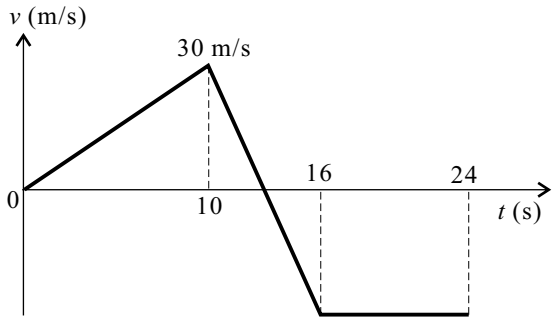

Fig. 10.60(a)

Solution

(i) Acceleration-Time diagram

Acceleration = Slope of v-t diagram

(a) $0 < t < 10$ s;

$$\text{Slope} = a = \frac{30}{10} = 3 \text{ m/s}^2$$

(b) $10 \text{ s} < t < 16$ s;

$$\text{Slope} = a = -\frac{30}{3}$$

$$= -10 \text{ m/s}^2$$

(By geometry, slope is intersecting as a mid-point between $t = 10$ s to $t = 16$ s, i.e., $t = 13$ s)

(c) From $t = 16$ s onwards ;

$$\text{Slope} = a = 0$$

(ii) Method for finding displacement

Change in displacement = Area under v-t diagram

(a) At $t = 10$ s

$$s_{10} - s_0 = \frac{1}{2} \times 10 \times 30 \qquad (\because s_0 = -25 \text{ m})$$

$$s_{10} = -25 + \frac{1}{2} \times 10 \times 30$$

$$s_{10} = 125 \text{ m}$$

(b) At $t = 13$ s (t-axis intercept)

$$s_{13} - s_{10} = \frac{1}{2} \times 3 \times 30$$

$$s_{13} = 125 + 45$$

$$s_{13} = 170 \text{ m}$$

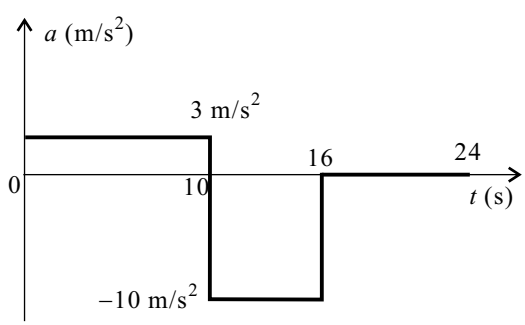

Fig. 10.60(b)

(c) At $t = 16$ s

$$s_{16} - s_{13} = \frac{1}{2} \times 3 \times (-30)$$

$$s_{16} = 170 - 45$$

$$s_{16} = 125 \text{ m}$$

(d) Due to negative velocity, the particle has reversed its direction and will reach again to its origin. Let t be the time taken by particle to reach the origin from $t = 16$ ss.

$s_0 - s_{16} = (-30) \times t \quad (s_0 = 0)$

$0 - 125 = -30\,t$

$t = 4.17$ s

$\therefore$ at $t = 16 + 4.17 = 20.17$ s, the particle will again pass through origin.

(e) At $t = 24$ s

$s_{24} - s_{16} = 8 \times (-30)$

$s_{24} = 125 - 240$

$s_{24} = -115$ m

(f) Initially particle is having negative displacement, $s = -25$ m.

Let t be the time taken to cross origin, we know

$$25 = \frac{1}{3} \times t \times 30$$

$\therefore\ t = 1.67$ s

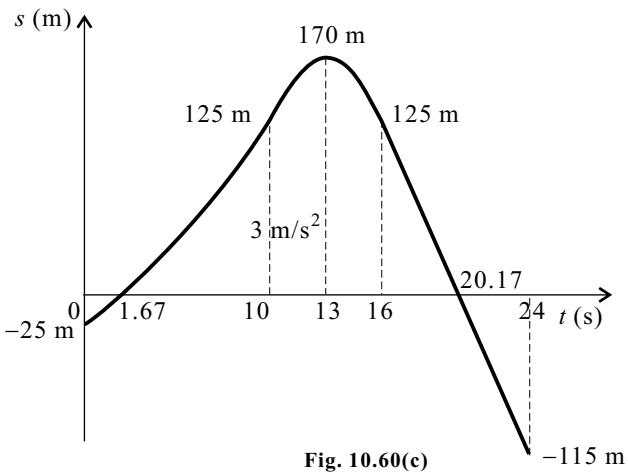

Fig. 10.60(c)

Problem 61

The motion of a particle from rest is given by the acceleration time diagram given in Fig. 10.61(a). Sketch velocity-time diagram and hence calculate velocity at $t = 12$ s.

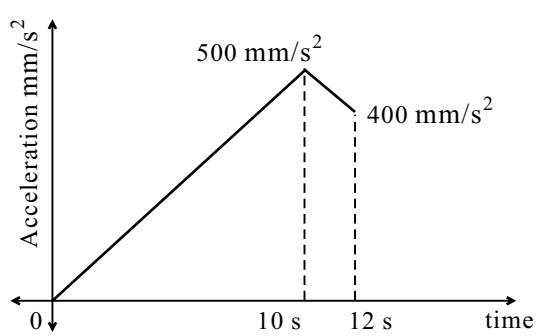

Fig. 10.61(a)

Solution

$$v_{10} - v_0 = \frac{1}{2} \times 500 \times 10$$

$$= 2500 \text{ mm/s}$$

$$v_{12} - v_{10} = \frac{1}{2} \times 2 \times 100 + 2 \times 400$$

$$= 900 \text{ mm/s}$$

$\therefore\ v_{12} = 2500 + 900$

$v_{12} = 3400$ mm/s

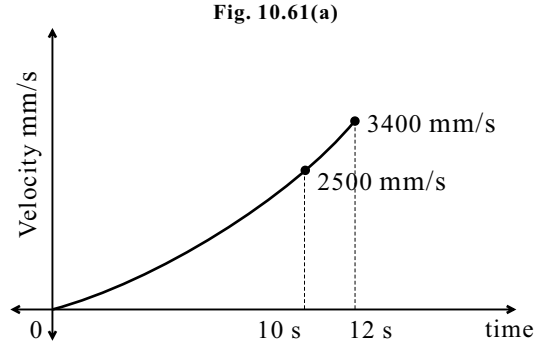

Fig. 10.61(b)

SUMMARY

- **Dynamics :** Study of geometry of motion with or without reference to the cause of motion.
- **Kinematics :** Study of geometry of motion without reference to the cause of motion (Force and mass are not considered).
- **Motion :** A body is said to be in motion if it is changing its position w.r.t. a reference plane.
- **Translation Motion :** If a straight line drawn on the moving body remains parallel to its original position then such a motion is called translation motion.
- **Rotational Motion :** If all the particles of a rigid body move in a concentric circle then such a motion is called rotational motion.
- **General Plane Motion :** It is a combination of both translation and rotational motion simultaneously.
- **Position :** Position means the location of a particle w.r.t. origin.
- **Displacement :** The change in position (final – initial) is called displacement.
- **Distance :** Total path travelled by the particle is called distance.
- **Speed :** The rate of change of distance w.r.t. time is called speed.
- **Velocity :** The rate of change of displacement w.r.t. time is called velocity.
- **Acceleration :** The rate of change of velocity w.r.t. time is called acceleration.
- **Uniform Velocity Motion :** If the velocity remains same throughout the path then it is called as uniform velocity motion.

$$\text{Displacement} = \text{Velocity} \times \text{Time}$$

- **Uniform Acceleration Motion :** If the rate of change of velocity is uniform throughout a path then it is called as uniform acceleration motion.

$v = u + at$	Under gravity
$s = ut + \frac{1}{2}at^2$	$v = u + gt$
$v^2 = u^2 + 2as$	$h = ut + \frac{1}{2}gt^2$
	$v^2 = u^2 + 2gh$
	where $g = 9.81\ \text{m/s}^2\ (\downarrow)$ and $g = -9.81\ \text{m/s}^2\ (\uparrow)$.

- **Variable Acceleration Motion :** If the rate of change of velocity is not uniform throughout the path then it is called as variable acceleration motion.

$$a = \frac{dv}{dt} = \frac{vdv}{ds}$$

- **Motion Curve :**

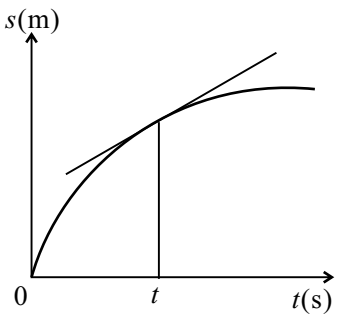

Slope $m = \frac{ds}{dt} = v$

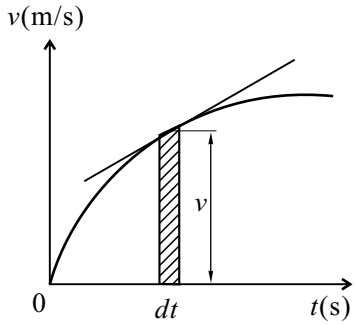

Slope $m = \frac{dv}{dt} = a$

$v\,dt = \frac{ds}{dt}\,dt = dA$

$ds = dA$

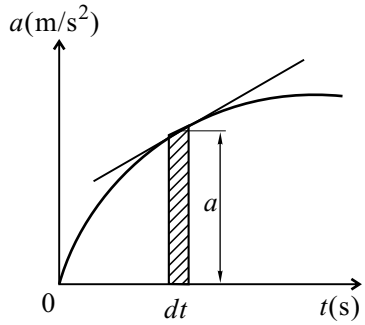

Slope $m = \frac{da}{dt}$ (Jerk)

$a\,dt = \frac{dv}{dt}\,dt = dA$

$dv = dA$

- ***s-t* Diagram :** The velocity of a particle at any instant of time t is the slope of s-t curve at that instant.
- ***v-t* Diagram :** The acceleration of a particle at any instant of time t is the slope of v-t curve at that instant. Change in displacement = Area under v-t curve
- ***a-t* Diagram :** Change in velocity = Area under a-t curve

EXERCISES

[I] Problems

Based on Rectilinear Motion with Constant Acceleration and Constant Velocity

1. A motorist enters a freeway at 10 m/s and accelerates uniformly to 25 m/s. From the odometer in the car, the motorist knows that he travelled 200 m while accelerating. Determine **(a)** the acceleration of the car, and **(b)** the time required to reach 25 m/s.

[***Ans.*** $a = 1.313$ m/s^2 and $t = 11.43$ s]

2. A trust travels 164 m in 8 s while being decelerated at a constant rate of 0.5 m/s^2. Determine **(a)** its initial velocity, **(b)** its final velocity, and **(c)** the distance travelled during the first 0.6 s.

[***Ans.*** $u = 22.5$ m/s, $v = 18.5$ m/s, and $s = 13.41$ m]

3. In travelling a distance of 3 km between points A and D, a car is driven at 100 km/h from A to B for t seconds. If the brakes are applied for 4 s between B and C to give a car uniform deceleration from 100 kmph to 60 kmph and it takes 't' seconds to move from C to D with a uniform speed of 60 kmph, determine the value of 't'.

[***Ans.*** $t = 65.5$ s]

4. During a time interval of 90 minutes, a car

(a) Runs at 50 km/h for the first 20 min,

(b) Accelerates uniformly to 90 km/h for the next 10 min,

(c) Runs at the speed of 90 km/h in the next 40 min, and

(d) Decelerates uniformly to a stop in the remaining 20 min.

Calculate the **(a)** acceleration, **(b)** deceleration, and **(c)** average speed during entire period.

[***Ans.*** **(a)** $a = 0.0185$ m/s^2, **(b)** $a = 0.021$ m/s^2 **(c)** $v = 68.88$ km/h]

5. A train starting from rest accelerates uniformly for 3 min, runs at a constant speed for the next 5 min and then comes to rest in 2 min. If it covers a total distance of 9 km, find the retardation in m/s^2.

[***Ans.*** $a = 0.167$ m/s^2]

6. Track repairs are going on a 2 km length of a railway track. The maximum speed of a train is 90 km/h. The speed over the repairs track is 36 km/h. If the train on approaching the repair track decelerates uniformly from the full speed of 90 km/h to 36 km/h in a distance of 200 m and after covering the repair track accelerates uniformly to full speed from 36 km/h in a distance of 1600 m, find the time lost due to reduction of the speed in the repair track.

[***Ans.*** $t = 150.86$ s]

7. The distance between two stations is 2.50 km. A locomotive starting from one station gives the train an acceleration reaching a speed of 36 km/h in 30 s until the speed reaches 54 km/h. This speed is maintained until the brakes are applied and the train is brought to rest at the second station under a retardation of 1 m/s^2. Find the time taken to perform the journey and the distances covered during the accelerated, uniform and retarded motion.

[***Ans.*** $t = 196.67$ s, $s = 337.5$ m, $s = 2050$ m and $s = 112.5$ m]

8. Automobile A shown in Fig. 10.E8 starts from O and accelerates at the constant rate of 0.75 m/s^2. A short time later it is passed by bus B which is travelling in the opposite direction at constant speed of 6 m/s. Knowing that bus B passes point O, 20 s after automobile A started from there. Determine when and where the vehicles passed each other.

[***Ans.*** $t = 11.6$ s and $s = 50.4$ m]

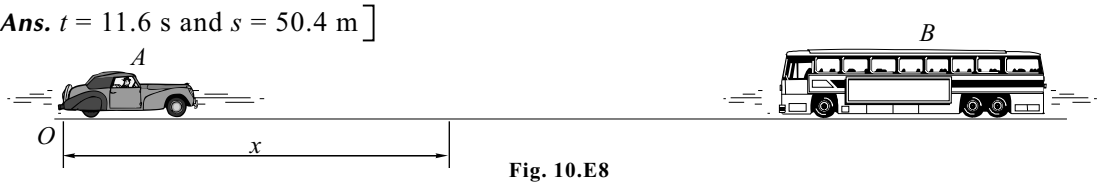

Fig. 10.E8

9. Two trains P and Q leave the same station on parallel lines. Train P starts at rest with uniform acceleration of 0.2 m/s^2 attains a speed of 10 m/s. Further the speed is kept constant. Train Q leaves 30 s later with uniform acceleration of 0.5 m/s^2 from rest and attains a maximum speed of 20 m/s. when will train Q overtake train P?

[***Ans.*** After 75 s from the start of train P]

10. Two trains P and Q start from rest simultaneously from stations A and B facing each other, with acceleration 0.5 m/s^2 and 2/3 m/s^2 reaching their maximum speeds of 90 km/h and 72 km/h, respectively. If they cross each other midway between the stations, find the distance between the stations and the time taken by each train.

[***Ans.*** s = 2000 m and t = 65 s]

Based on Rectilinear Motion Under Gravity

11. From the top of a 49.05 m high tower, a stone is projected upwards with velocity of 19.62 m/s. Find **(a)** the time required for stone to reach the ground, **(b)** the time required for reach maximum elevation, **(c)** the maximum elevation, **(d)** the velocity with which stone strikes the grounds, and **(e)** the time required for the velocity to attain a magnitude of 9.81 m/s.

[***Ans.*** **(a)** t = 5.742 s, **(b)** t = 2 s, **(c)** h = 19.62 from top of tower,
(d) v = 36.71 m/s **(e)** t = 1 s and 3 s]

12. A stone is dropped from the top of a 50 m high tower. At the same instant, another stone is thrown up from the foot of the same tower with a velocity of 25 m/s. At the distance from top and after how much time the two stones cross each other.

[***Ans.*** t = 2 s and h = 19.6 m from top]

13. Two objects A and B, 130 m above the ground are projected vertically. A is projected vertically upwards with a velocity of 30 m/s while B is projected vertically downwards with the same velocity. Find the time taken by each object to reach the ground.

At what height the object A must be just released in order the two objects may hit the ground simultaneously?

[***Ans.*** t_A = 9.05 s, t_B = 2.93 s and h = 42.04 m]

14. A stone falls freely from rest and total distance covered by it in last second of its motion equals the distance covered by it is first three seconds of its motion. Determine the time in which the stone remains in air.

[***Ans.*** t = 5 s]

15. A particle falls from rest and in the last second of its motion it passes 70 m. Find the height from which it fell and the time of its fall.

[***Ans.*** h = 286 m and t = 7.635 s]

16. A particle moving with an acceleration of 10 m/s^2 travels a distance of 50 m during the 5th second of its travel, find its initial velocity.

[***Ans.*** v = 4.5 m/s]

17. A particle falling under gravity falls 30 m in a certain second. Find the time required to cover the next 30 m.

[***Ans.*** t = 0.775 s]

18. A particle falling freely under the action of gravity passes 10 m apart vertically in 0.2 s. From what height above the higher point did it start to fall?

[***Ans.*** h = 122.5 m]

19. A stone is dropped into a well as shown in Fig. 10.E19. If a splash is heard 2.50 seconds later, determine depth of water surface assuming the velocity of sound as 330 m/s.

[***Ans.*** h = 28.49 m]

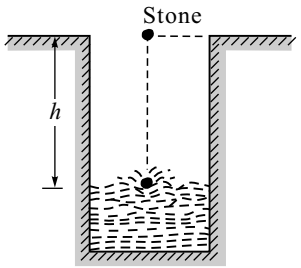

Fig. 10.E19

20. Water drips from a faucet at the rate of 5 drops per second as shown in Fig. 10.E20. Determine the vertical separation between two consecutive drops after the lower drop has attended a velocity of 3 m/s.

[***Ans.*** h = 404 mm]

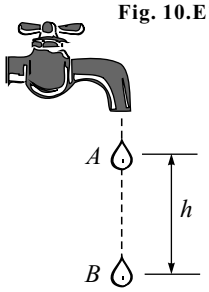

Fig. 10.E20

21. Water drips from a faucet at the rate of 6 drops per second. The faucet is 200 mm above the sink as shown in Fig. 10.E21. When one drop strikes the sink, how far is the next drop above the sink.

[***Ans.*** h = 194.55 mm]

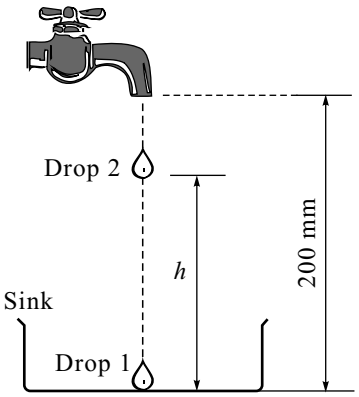

Fig. 10.E21

22. A balloon is rising vertically upward with a uniform velocity 'u' as shown in Fig. 10.E22. At a certain instant, a ball 1 is dropped from it, which takes 4 s to reach the ground. The moment this ball strikes the ground, another ball is dropped from the balloon and this ball takes 5 s to reach the ground. Find the velocity of the balloon 'u' and height from which both the balls must have been dropped.

[***Ans.*** u = 8.82 m/s, h_1 = 43.12 m and h_2 = 78.4 m]

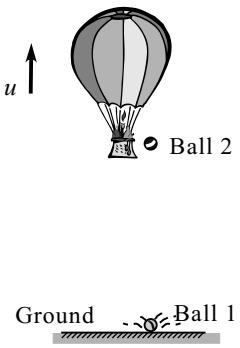

Fig. 10.E22

23. A helicopter is descending vertically downward with a uniform velocity. At a certain instant, a food packet is dropped from it, which takes 5 s to reach the ground. As this packet strikes the ground, another food packet is dropped from it, which takes 4 s to reach the ground. Find the velocity with which the helicopter is descending and its height, when first packet is dropped. Also find the distance travelled by the helicopter during the interval of dropping the packets.

[***Ans.*** 11.04 m/s downwards at 177.8 m height and 55.2 m downwards.]

24. During a test an elevator is travelling upward at 15 m/s and the hoisting cable is cut when it is 40 m from the ground. Determine the maximum height S_B reached by the elevator and its speed just before it hits the ground. During the entire time, the elevator is in motion, it is subjected to a constant downward acceleration of 9.81 m/s^2 due to gravity. Neglect the effect of air resistance.

[***Ans.*** s_B = 51.5 m and v = 31.8 m/s.]

25. From a certain height, a helicopter starts going up with acceleration. In 10 s, it goes up by 1/6th of its original height. If a ball is dropped at this instant, it takes 5 s to reach the ground. What is the original height from which the helicopter has started and with what acceleration?

[***Ans.*** h = 91.875 m and a = 0.30625 m/s^2.]

26. An elevator ascends with an upward acceleration of 1.2 m/s^2. At the instant when the upward speed is 2.4 m/s, a loose bolt drops from the ceiling of the elevator located 2.75 m from its floor. Calculate **(a)** the time of flight of the bolt from ceiling to floor of the elevator, and **(b)** the displacement and the distance covered by the bolt during the free fall relative to the elevator shaft.

[***Ans.*** **(a)** t = 0.707 s **(b)** 0.75 m, 1.34 m]

27. A balloon starts moving upwards from the ground with constant acceleration of 1.6 m/s^2. Four seconds later, a stone is thrown from the same point. **(a)** What velocity should be imparted to the stone so that it just touches the ascending balloon, and **(b)** At what height will the stone touch the balloon?

[***Ans.*** **(a)** v = 26.56 m/s **(b)** h = 36 m]

Based on Rectilinear Motion with Variable Acceleration

28. During a test, the car moves in a straight line such that for a short time its velocity is defined by $v = 0.3(9t^2 + 2t)$ m/s, where t is in seconds. Determine its position and acceleration when t = 3 s. Given at t = 0, s = 0.

[***Ans.*** s = 27 m and a = 16.8 m/s^2]

29. The motion of a particle is defined by a relation $v = 4t - 3t - 1$ where v is in m/s and t is in s. If the displacement $x = -4$ m at t = 0, determine the displacement and acceleration when t = 3 s. Find also the time when the velocity becomes zero and the distance traveled by the particle during that time.

[***Ans.*** x = 15.5 m, a = 21 m/s^2 and Δx = 1.17 m at t = 1 s]

30. The acceleration of a particle is given by $a = k/x$, when $x = 250$ mm, v was 4 m/s. and when $x = 500$ mm, v was 3 m/s. Determine the velocity of the particle when $x = 750$ mm. Find the position of the particle when it comes to rest.

[***Ans.*** $v = 2.21$ m/s and $s = 1219$ mm]

31. The acceleration is defined by $a = -kx^{-2}$. The particle starts with no initial velocity at $x = 0.8$ m and its velocity becomes 6 m/s when $x = 0.5$ m. Determine the value of k. Also determine the velocity of the particle when $x = 0.25$ m.

[***Ans.*** $k = 24$ and $v = 11.59$ m/s.]

32. A particle starting from rest, moves in a straight line, whose acceleration is given by $a = 10 - 0.006s^2$, where a is in m/s^2 and s is in metres. Determine **(a)** the velocity of the article when it has travelled 50 m, and **(b)** the distance travelled by the particle, when it comes to rest.

[***Ans.*** **(a)** $v = 22.36$ m/s **(b)** $s = 70.71$ m]

33. The acceleration of a particle moving along a straight line is given by the law, $a = 25 - 3s^2$ where a is m/s^2 and s is in metres. The particle starts from rest. Find **(a)** velocity when the displacement is 2 m, **(b)** The displacement when the velocity is again zero, and **(c)** The displacement at maximum velocity.

[***Ans.*** **(a)** $v = 9.165$ m/s, **(b)** $s = 5$ m **(c)** $s = 2.887$ m]

34. A sphere is fired downward into a medium with an initial speed of 27 m/s. If it experiences a deceleration $a = -6t$ m/s^2 where t is in seconds, determine the distance travelled before it comes to rest.

[***Ans.*** $s = 54$ m]

35. A small projectile is fired vertically downward in to a fluid medium with an initial velocity of 60 m/s. If the projectile experiences a deceleration, $a = -0.4v^3$ m/s^2, where v is measured in m/s, determine the projectile velocity and position 4 s after it is fired.

[***Ans.*** $v = 0.559$ m/s and $s = 4.43$ m.]

36. A particle moving in a straight line has an acceleration, $a = \sqrt{v}$. Its displacement and velocity at time $t = 2$ s, are 128/3 m and 16 m/s, respectively. Find the displacement, velocity and acceleration at $t = 3$ s.

[***Ans.*** $s = 60.75$ m, $v = 20.25$ m/s and $a = 4.5$ m/s^2]

37. The acceleration of the train, starting from rest, at any instant is given by the expression $a = \left[\dfrac{8}{v^2 + 1}\right]$ m/s^2, where v is the velocity of the train in m/s. Find the velocity of the train when its displacement is 20 m and its displacement when velocity is 64.8 kmph.

[***Ans.*** $v = 4.931$ m/s and $s = 3300.75$ m]

38. The acceleration of a particle is given by $a = -0.02v^{1.75}$ m/s^2 performing rectilinear motion. Knowing at $x = 0$, $v = 15$ m/s. Determine **(a)** the position where velocity is 14 m/s, and **(b)** the acceleration when $x = 100$ m.

[***Ans.*** **(a)** $s = 6.73$ m **(b)** $a = -0.29$ m/s^2]

46. A projectile enters a resisting medium at $x = 0$ with an initial velocity $v_o = 360$ m/s and travels 100 mm before coming to rest. Assuming that the velocity of the projectile is defined by the relation $v = v_o - kx$, where v is expressed in metres/second and x in metres determine **(a)** initial acceleration, and **(b)** the time required for the projectile to penetrate 94 mm into the resisting medium.

[***Ans.*** **(a)** $a = -1.291 \times 106$ m/s^2 **(b)** $t = 7.815 \times 10^{-4}$ s]

Based on Motion Diagram (Graphical Solution)

47. In travelling a distance of 3 km between points A and D, a car is driven at 100 km/h from A to B for t seconds. If brakes are applied for 4 s between B and C to give a car uniform deceleration from 100 kmph to 60 kmph and it takes t seconds to move from C to D with a uniform speed of 60 kmph. Determine the value of t.

[***Ans.*** 65.5 s]

48. Two trains P and Q leave the same station on parallel lines. Train P starts at rest with uniform acceleration of 0.2 m/s^2 attains a speed of 10 m/s. Further the speed is kept constant. Train Q leaves 30 s later with uniform acceleration of 0.5 m/s^2 from rest and attains a maximum speed of 20 m/s. When will train Q overtake train P?

[***Ans.*** After 75 s from the start of train P]

49. Two trains P and Q start from rest simultaneously from stations A and B facing each other, with accelerations 0.5 m/s^2 and 2/3 m/s^2 reaching their maximum speeds of 90 km/h and 72 km/h, respectively. If they cross each other midway between the stations, find the distance between the stations and the time taken by each train.

[***Ans.*** 2000 m and 65 s]

50. A bus starts from rest at point A and accelerates at constant rate of 0.75 m/s^2 until it reaches a speed of 9 m/s. It then proceeds at 9 m/s until brakes are applied 27 m ahead of B, where it comes to rest. Assuming uniform deceleration and knowing that distance between A and B is 180 m. Determine the time required for bus to travel from A to B, and uniform deceleration. Sketch v-t and a-t diagrams and also find the average speed during entire period.

[***Ans.*** 29 s and 6.21 m/s]

51. A point moves along a straight line such that its displacement is $s = 8t^2 + 2t$ where s is in metres, t in seconds. Plot the displacement, velocity and acceleration against time.

52. Figure 10.E52 shows a plot of acceleration versus time for a particle moving along straight line. What is the speed and the distance covered by the particle after 50 s? Also find the maximum speed and the time at which the speed is attained by the particle.

[***Ans.*** 420 m/s and 9600 m and v_{max} = 420 m/s at t = 50 s.]

Fig. 10.E52

53. A two-stage rocket is fired vertically from rest with acceleration as shown in Fig. 10.E53. After 15 s the first stage A burns out and the second stage B ignites. Calculate the following:

(a) Velocity of the rocket at t = 15 s,

(b) Distance travelled by the rocket at t = 15 s,

(c) Velocity of the rocket at t = 40 s and

(d) Distance travelled by the rocket from rest until t = 40 s.

[***Ans.*** **(a)** 112.5 m/s, **(b)** 2562.5 m, **(c)** 612.5 m/s **(d)** 9625 m]

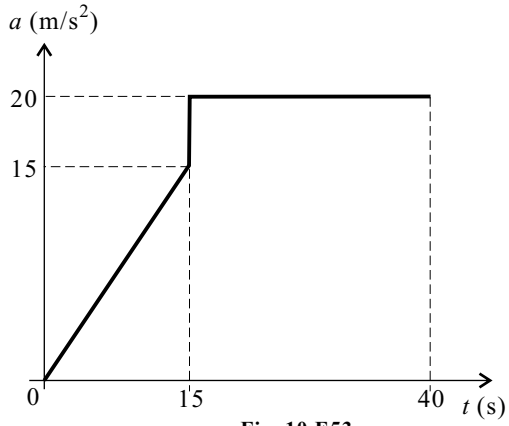

Fig. 10.E53

54. A rocket sled starts from rest and travels along a straight track such that it accelerates at a constant rate for 10 s and then decelerates at a constant rate as shown in Fig. 10.E54. Draw the v-t curve and s-t curve and determine the time t' needed to stop the sled. How far has the sled travelled?

[***Ans.*** t' = 60 s and s = 3000 m]

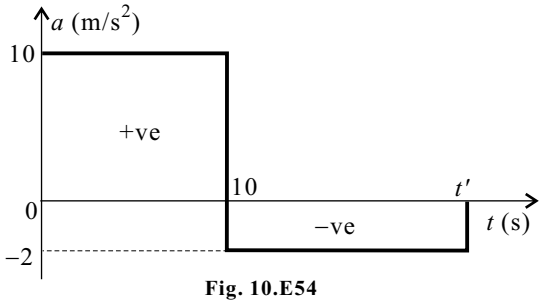

Fig. 10.E54

55. For the acceleration-time diagram of a particle is shown in Fig. 10.E55, calculate the velocity at the end of 3 s and the distance traveled in 4 s.

[***Ans.*** 0.5 m/s and 2 m]

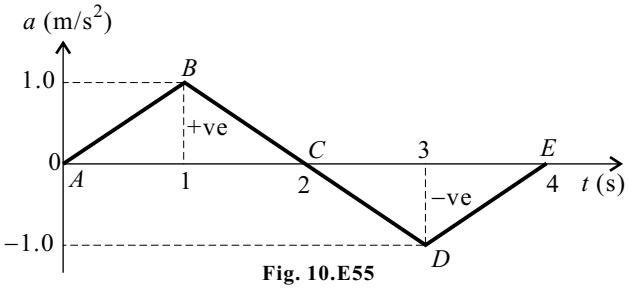

Fig. 10.E55

56. The v-x graph of a rectilinear moving particle is shown in Fig. 10.E56. Find acceleration of the particle at 20 m, 80 m and 200 m.

[***Ans.*** $a_{20} = 0.2$ m/s^2, $a_{80} = 0$, and $a_{200} = -0.4$ m/s^2]

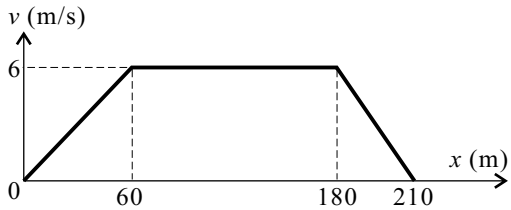

Fig. 10.E56

57. A particle starts from rest at $x = -2$ m and moves along x-axis with the velocity graph shown in Fig. 10.E57. Plot the acceleration and displacement graph for the first 2 seconds. Find the time t when the particle crosses the origin.

[***Ans.*** 0.92 s]

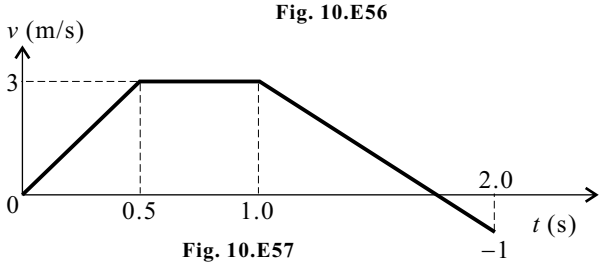

Fig. 10.E57

58. A dragster starting from rest travels along a straight road and for 10 s has acceleration as shown in Fig. 10.E58. Construct the v-t graph that describes the motion and find the distance travelled in 10 s.

[***Ans.*** 114 m]

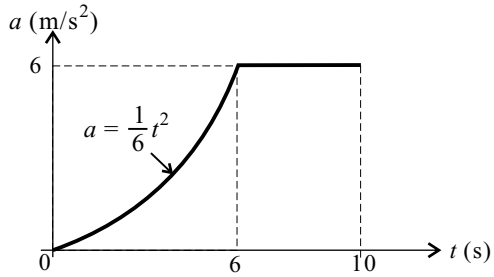

Fig. 10.E58

[II] Review Questions

1. Define the terms:

(i) Dynamics
(ii) Kinematics
(iii) Kinetics
(iv) Particle
(v) Rigid body

2. Distinguish between

(i) Rectilinear motion and curvilinear motion.
(ii) Centroidal rotation and non-centroidal rotation

3. Explain the following:

(i) Translation motion
(ii) Rotational motion
(iii) General plane motion

4. What is meant by

(i) Position
(ii) Displacement
(iii) Distance
(iv) Velocity
(v) Speed
(vi) Acceleration

5. What are the equations of various motions?

[III] Fill in the Blanks

1. A body is said to be in motion if it is changing its _____ w.r.t. reference plane.

2. If a straight line drawn on the moving body remains parallel to its original position then such a motion is called _____ motion.

3. If all the particles of a rigid body moves in a concentric circle then such a motion is called _____ motion.

4. _____ means the location of a particle w.r.t. origin.

5. The rate of change of distance w.r.t. time is called _____.

6. The rate of change of _____ w.r.t. time is called velocity.

[IV] Multiple-choice Questions

Select the appropriate answer from the given options.

1. A particle can perform _____ motion.

(a) only translation **(b)** only rotational **(c)** general plane **(d)** All of these

2. Study of kinematics of particle does not deal with _____.

(a) displacement **(b)** velocity **(c)** acceleration **(d)** force

3. The value of a freely falling body from the top of a tower is _____.

(a) 9.81 cm/s^2 **(b)** –9.81 cm/s^2 **(c)** 9.81 m/s^2 **(d)** –9.81 m/s^2

4. Slope of velocity-time curve is _____.

(a) displacement **(b)** velocity **(c)** acceleration **(d)** distance

5. If acceleration-time diagram is represented by a horizontal straight line then displacement is a _____.

(a) incline straight line **(b)** parabolic curve **(c)** cubic curve **(d)** zero

CHAPTER

11

KINEMATICS OF PARTICLES - II
CURVILINEAR MOTION

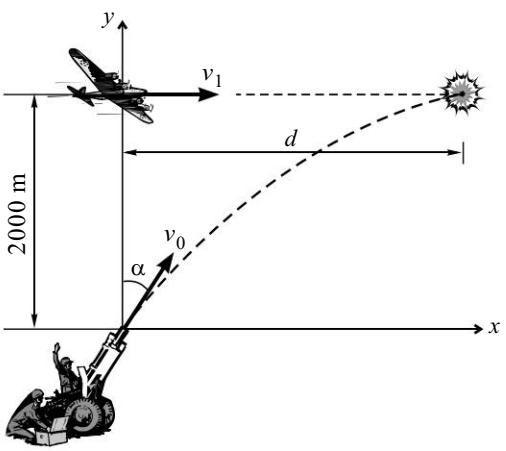

Learning Objectives

After reading this chapter, you will be able to answer the following questions :

- *What is curvilinear motion?*
- *What is a rectangular component system?*
- *What is tangential and normal component system?*
- *What is projectile motion?*
- *What is relative motion?*
- *How is relative motion between two particles determined?*

11.1 CURVILINEAR MOTION

If a particle is moving along curved path then it is said to perform ***curvilinear motion***.

Let us discuss the terms - position, velocity and acceleration for curvilinear motion.

1. Position

Consider the motion of a particle along a curved path as shown in Fig. 11.1-i. It is represented by a position vector $\overline{r}$ which is drawn from the origin 'O' of the fixed reference axis to particle 'P'. The line OP is called *position vector*. As the particle will move along the curved path, the value of $\overline{r}$ will go on changing.

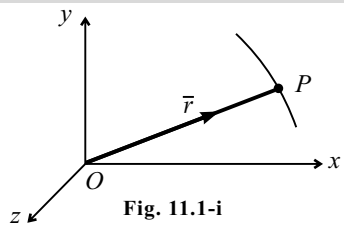

Fig. 11.1-i

2. Velocity

Consider after a short interval of time Δt, particle has occupied new position P', simultaneously the position vector $\overline{r}$ will change to $\overline{r}'$.

The vector joining P and P' is the change in position vector Δr during the time interval Δt.

$\therefore$ the average velocity $v = \dfrac{\Delta \overline{r}}{\Delta t}$

For very small interval of time $\Delta t \to 0$

Instantaneous velocity at P is $\lim\limits_{\Delta t \to 0} \dfrac{\Delta \overline{r}}{\Delta t}$

$$\therefore \quad v = \frac{dr}{dt}$$

Here during a small interval of time Δt, the particle moves a distance Δs along the curve.

$\therefore$ the magnitude of velocity called speed is given by relation

$$\text{Speed} = |\overline{v}| = \lim_{\Delta t \to 0} \frac{\Delta s}{\Delta t} = \frac{ds}{dt}$$

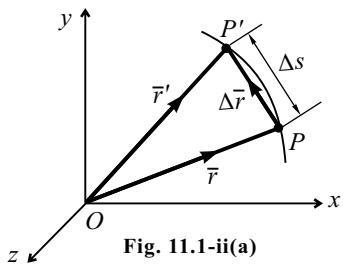

Fig. 11.1-ii(a)

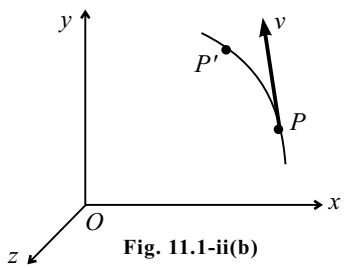

Fig. 11.1-ii(b)

Note : In curvilinear motion, velocity of particle is always tangent to the curved path at every instant.

3. Acceleration

As the direction of velocity continuously changes in curvilinear motion, it is responsible to develop acceleration at every instant.

Consider velocity of the particle at P to be v and at position P' be v'.

$\therefore$ Average acceleration $a = \dfrac{\Delta \overline{v}}{\Delta t}$

For very small interval of time, $\Delta t \to 0$

Instantaneous velocity at P is $\lim\limits_{\Delta t \to 0} \dfrac{\Delta \overline{v}}{\Delta t}$

$$\therefore \quad a = \frac{dv}{dt}$$

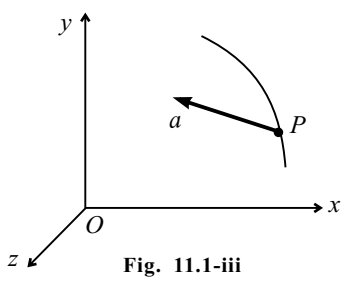

Fig. 11.1-iii

Note : In rectilinear motion, displacement, velocity and acceleration are always directed along the path of particle. Whereas in curvilinear motion it change its direction instant to instant. Therefore, the analysis of curvilinear motion is done by considering different component system. There are two methods for analysis in terms of different component system.

(1) Curvilinear motion by Rectangular Component System

(2) Curvilinear motion by Tangential and Normal Component System

4. Rectangular Component System

If a particle is moving along a curved path, its motion can be splitted into x, y and z direction as independently performing rectilinear motions.

Thus, for curvilinear motion we can have a relation as follows.

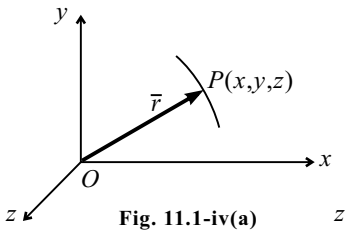

Fig. 11.1-iv(a)

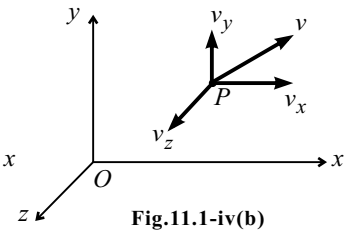

Fig.11.1-iv(b)

Vector Form	$\bar{r} = x\bar{i} + y\bar{j} + z\bar{k}$	$\bar{v} = \frac{d\bar{r}}{dt} = v_x\bar{i} + v_y\bar{j} + v_z\bar{k}$	$a = \frac{dv}{dt} = a_x\bar{i} + a_y\bar{j} + a_z\bar{k}$
Magnitude	$r = \sqrt{x^2 + y^2 + z^2}$	$v = \sqrt{v_x^2 + v_y^2 + v_z^2}$	$a = \sqrt{a_x^2 + a_y^2 + a_z^2}$

Direction is given by the relation

$$\cos\alpha = \frac{x}{r} = \frac{v_x}{v} = \frac{a_x}{a}\ ;\ \cos\beta = \frac{y}{r} = \frac{v_y}{v} = \frac{a_y}{a}\ ;\ \cos\gamma = \frac{z}{r} = \frac{v_z}{v} = \frac{a_z}{a}\ ;$$

While dealing with coplanar motion we can consider particle moving in xy plane. Its rectangular component system will be as follows.

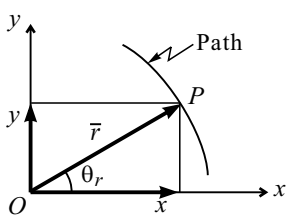

Fig. 11.1-v(a)

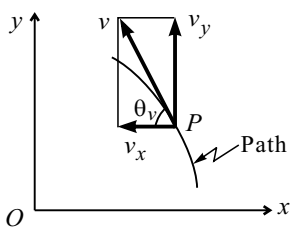

Fig. 11.1-v(b)

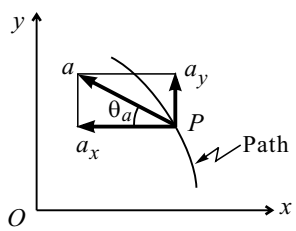

Fig. 11.1-v(c)

Vector Form	$\bar{r} = x\bar{i} + y\bar{j}$	$\bar{v} = v_x i + v_y j$	$a = a_x\bar{i} + a_y\bar{j}$
Magnitude	$r = \sqrt{x^2 + y^2}$	$v = \sqrt{v_x^2 + v_y^2}$	$a = \sqrt{a_x^2 + a_y^2}$
Direction	$\tan\theta_r = \frac{y}{x}$	$\tan\theta_v = \frac{v_y}{v_x}$	$\tan\theta_a = \frac{a_y}{a_x}$

5. Derivation of Rectangular Component of Velocity

As the direction of velocity of a particle in curvilinear motion changes continuously, so it is convenient to deal with its components v_x and v_y.

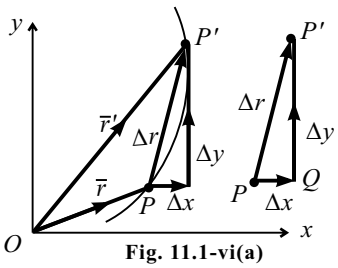

Fig. 11.1-vi(a)

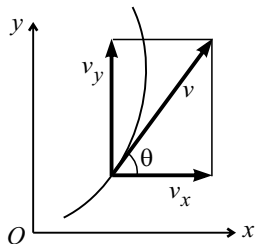

Fig. 11.1-vi(b)

Resolve Δr into two rectangular components $\overline{PQ}$ (Δx) and $\overline{QP'}$ (Δy) parallel to the x and y axis as shown.

$$\Delta r = \overline{PQ} + \overline{QP'}$$

$$v = \lim_{\Delta t \to 0} \frac{\Delta r}{\Delta t} = \lim_{\Delta t \to 0} \frac{\overline{PQ}}{\Delta t} + \lim_{\Delta t \to 0} \frac{\overline{QP'}}{\Delta t}$$

$$v = \lim_{\Delta t \to 0} \frac{\Delta x}{\Delta t} + \lim_{\Delta t \to 0} \frac{\Delta y}{\Delta t}$$

$$v = \frac{dx}{dt} + \frac{dy}{dt}$$

$$v = v_x + v_y$$

$$\text{Magnitude} \quad v = \sqrt{v_x^2 + v_y^2}$$

$$\text{Direction} \quad \tan\theta = \frac{v_y}{v_x}$$

6. Derivation of Rectangular Component of Acceleration

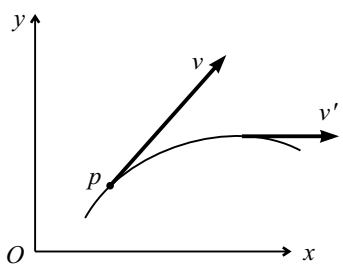

Fig. 11.1-vii(a)

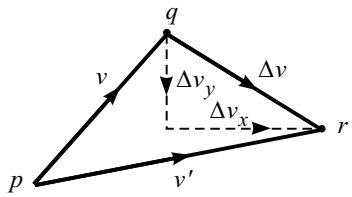

Fig. 11.1-vii(b)

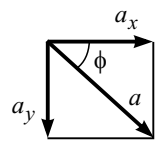

Fig. 11.1-vii(c)

Vector $\overline{pq}$ and $\overline{pr}$ represents the velocities v and v' and the vector $\overline{qr}$ be change in velocity Δv of the particle.

Resolving Δv into components Δv_x and Δv_y,

$$\Delta v = \overline{qr} = \overline{qs} + \overline{sr}$$

$$a = \frac{\Delta v}{\Delta t} = \lim_{\Delta t \to 0} \frac{\overline{qs}}{\Delta t} + \lim_{\Delta t \to 0} \frac{\overline{sr}}{\Delta t}$$

$$a = \lim_{\Delta t \to 0} \frac{\Delta v_y}{\Delta t} + \lim_{\Delta t \to 0} \frac{\Delta v_x}{\Delta t}$$

$$a = \frac{dv_y}{dt} + \frac{dv_x}{dt}$$

$$a = a_x + a_y$$

$$\text{Magnitude of acceleration} \quad a = \sqrt{a_x^2 + a_y^2}$$

$$\text{Direction} \quad \tan\phi = \frac{a_y}{a_x}$$

7. Tangential and Normal Component System

Curvilinear motion can also be studied by considering tangential and normal components method.

The velocity vector v is always directed in the tangential direction as discussed in the previous contain. However, the net acceleration of the particle at a particular instant need not be along the tangential direction.

Therefore, sometimes it is convenient to express the acceleration of the particle in tangential and normal component form. The components are named by *tangential acceleration* (a_t) and *normal acceleration* (a_n).

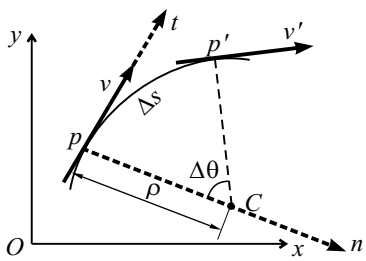

Fig. 11.1-viii(a)

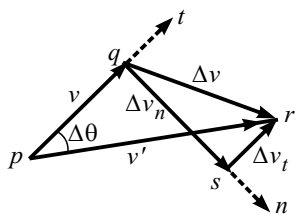

Fig. 11.1-viii(b)

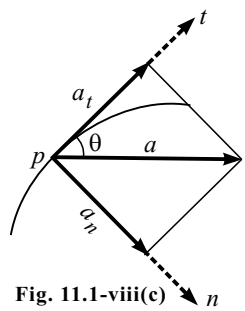

Fig. 11.1-viii(c)

Let the particle has a velocity v at a time t and velocity v' at a later time $(t + \Delta t)$.

For getting the change in velocity of the particle, draw $\overline{pq}$ and $\overline{pr}$ which represents v and v' respectively. The closing side $\overline{qr}$ of the triangle represents the change in the velocity Δv in time Δt.

Resolve Δv into two components Δv_t and Δv_n, along the tangent and normal to the path at p. Let the axis in these direction be denoted by t (tangential) and n (normal).

$$\Delta v = \overline{qr} = \overline{qs} + \overline{sr}$$

$$\Delta v = \Delta v_n + \Delta v_t$$

For acceleration, we have

$$a = \lim_{\Delta t \to 0} \frac{\Delta v}{\Delta t} = \lim_{\Delta t \to 0} \frac{\Delta v_t}{\Delta t} + \lim_{\Delta t \to 0} \frac{\Delta v_n}{\Delta t}$$

$$a = \frac{dv_t}{dt} + \frac{dv_n}{dt}$$

$$a = a_t + a_n$$

Magnitude of acceleration $a = \sqrt{a_t^2 + a_n^2}$

Direction $\tan\theta = \dfrac{a_n}{a_t}$

When Δt is very small, i.e., it tends to zero, the point p' coincides with the point p and direction of a_t and a_n coincides with the direction of tangent and normal to the path p.

8. Component of Tangential Acceleration (a_t)

It can be noted that $\overline{sr}$ represents the change in the magnitude of the velocity v.

$$\therefore \; a_t = \lim_{\Delta t \to 0} \left(\frac{v' - v}{\Delta t} \right) = \lim_{\Delta t \to 0} \frac{\Delta v}{\Delta t}$$

$$a_t = \frac{dv}{dt}$$

Thus, the component of tangential acceleration (a_t) *is equal to the rate of change of the speed of the particle.*

9. Component of Normal Acceleration (a_n)

It can be noted that $\overline{qs}$ represents the rate of change of direction of the velocity

$$qs \approx v\,\Delta\theta \text{ for a small change in angle } \theta$$

$$\therefore\ \Delta v_n \approx v \cdot \Delta\theta$$

$$\therefore\ a_n = \lim_{\Delta t \to 0}\left(\frac{v \cdot \Delta\theta}{\Delta t}\right)$$

If ρ is the radius of curvature of the curve then we have

$$\Delta s = \rho\,\Delta d\theta$$

$$\Delta\theta = \frac{\Delta s}{\rho}, \text{ } \Delta s \text{ being the length of the arc } pp'$$

$$\therefore\ a_n = \lim_{\Delta t \to 0}\left(\frac{v \cdot \Delta\theta}{\Delta t}\right) = \lim_{\Delta t \to 0}\frac{\Delta s}{\Delta t} \cdot \frac{v}{\rho}$$

$$\therefore\ a_n = \frac{v}{\rho} \cdot \frac{ds}{dt} \qquad \text{But } \frac{ds}{dt} = v$$

$$\therefore\ a_n = \frac{v^2}{\rho}$$

Component of normal acceleration is always directed towards the centre of curvature of the path. It is also called the *centripetal acceleration* (a_n).

The net acceleration of particle in vector form can be expressed as

$$a = a_t + a_n$$

where $a_t = \dfrac{dv}{dt}$ is responsible for changing the magnitude of speed and $a_n = \dfrac{v^2}{\rho}$ is responsible for changing the direction.

Magnitude of net acceleration $a = \sqrt{a_t^2 + a_n^2}$

and the direction $\tan\theta = \dfrac{a_n}{a_t}$

If particle is moving along curved path with uniform speed then component of tangential acceleration

$$a_t = \frac{dv}{dt} = 0$$

$$\therefore\ \text{Net acceleration } a = a_n = \frac{v^2}{\rho}$$

If a_t is zero and a_n is constant then particle is moving along circular path with uniform speed.

If a_t is constant, i.e., speed changes at uniform rate, then distance covered by the particle along curved path or its speed at any instant or time interval of motion or a_t itself can be calculated using the equation of rectilinear motion with constant acceleration.

$$v = u + a_t t$$

$$s = ut + \frac{1}{2} a_t t^2$$

$$v^2 = u^2 + 2a_t s$$

where s is the distance covered along curved path

u is initial speed and v is final speed

a_t is the component of acceleration along tangential direction

If the equation of curve is given by $y = f(x)$ then at point $p(x, y)$ radius of curvature is calculated by the following relation:

$$\rho = \left| \frac{\left[1 + \left(\frac{dy}{dt}\right)^2\right]^{3/2}}{\frac{d^2y}{dt^2}} \right|$$

If data is given in rectangular-component form then radius of curvature is calculated by the following relation:

$$\rho = \left| \frac{(v_x^2 + v_y^2)^{3/2}}{v_x a_y - v_y a_x} \right|$$

If particle is moving in space curve then radius of curvature is calculated by following relation:

$$|\bar{v} \times \bar{a}| = \frac{v^3}{\rho}$$

Components of velocity along x- and y-axis are given by

$$v_x = v \cos\theta, \quad v_y = v \sin\theta$$

$$\tan\theta = \frac{dy}{dx}$$

and components of acceleration along x- and y-axis are given by

$$a_x = a \cos(\theta + \alpha)$$

$$a_y = a \sin(\theta + \alpha)$$

$$\tan\alpha = \frac{a_n}{a_t}$$

Relationship between rectangular components and tangential and normal components of acceleration:

$$a_x = a_n \sin\theta + a_t \cos\theta$$

$$a_y = a_n \cos\theta + a_t \sin\theta$$

$$a_n = a_x \sin\theta + a_y \cos\theta$$

$$a_t = a_x \cos\theta - a_y \sin\theta$$

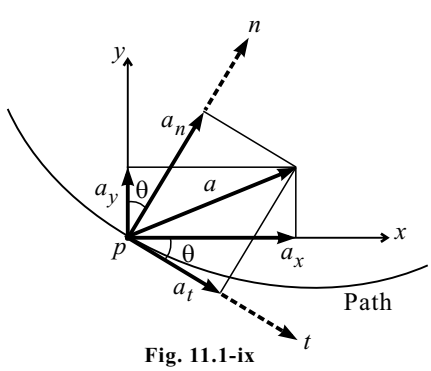

Fig. 11.1-ix

Solved Problems Based on Curvilinear Motion

Problem 1

A bomb thrown from a plane flying at a height of 400 m as shown in Fig. 11.1 moves along the path $\bar{r} = 50t\,\bar{i} + 4t^2\,\bar{j}$ where t is in second and distances are measured in m. The origin is taken as the point where the bomb is released and the y-axis is taken as pointing downwards. Find **(i)** the path of the bomb, **(ii)** the time taken to reach the ground, and **(iii)** the horizontal distance traversed by the bomb.

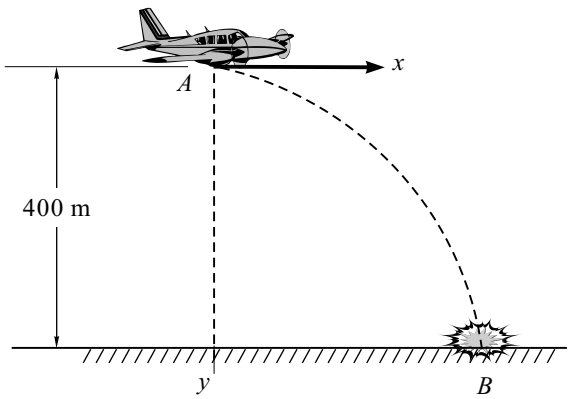

Fig. 11.1

Solution

Given : $\bar{r} = 50t\,\bar{i} + 4t^2\,\bar{j}$; $x = 50t$; $y = 4t^2$

$\because\ y = 400 \text{ m} \quad \Rightarrow 400 = 4 \times t^2$

$t = 10 \text{ s}$

$\because\ x = 50 \times t \quad \Rightarrow x = 500 \text{ m}$

$\because\ x = 50 \times t \quad \Rightarrow t = \dfrac{x}{50}$

$y = 4t^2 = 4 \times \left(\dfrac{x}{50}\right)^2$

$\therefore\ y = \dfrac{x^2}{625}$ is the equation of path.

Problem 2

The position vector of a particle is given by $\bar{r} = 2t^2\,\bar{i} + \left(\dfrac{4}{t^2}\right)\bar{j}$ m where t is in seconds.

Determine when $t = 1$ s **(i)** the magnitudes of normal and tangential components of acceleration of the particle and **(ii)** the radius of curvature of the path.

Solution

Method I

$$\bar{r} = 2t^2\,\bar{i} + \left(\frac{4}{t^2}\right)\bar{j} \text{ m}$$

$$\bar{v} = \frac{dr}{dt} = 4t\,\bar{i} - \frac{8}{t^3}\,\bar{j}$$

$$\therefore\ \bar{a} = \frac{dv}{dt} = 4\,\bar{i} + \frac{24}{t^4}\,\bar{j}$$

At $t = 1$ s

$\bar{v} = 4\,\bar{i} - 8\,\bar{j}$

$\bar{a} = 4\,\bar{i} + 24\,\bar{j}$

$$\bar{e}_t = \frac{\bar{v}}{v} = \frac{4\,\bar{i} - 8\,\bar{j}}{\sqrt{(4)^2 + (-8)^2}}$$

$$a = \sqrt{4^2 + 24^2} = 24.33 \text{ m/s}^2$$

$$a_t = \bar{a} \cdot \bar{e}_t = (4\,\bar{i} + 24\,\bar{j}) \cdot \left(\frac{4\,i - 8\,j}{\sqrt{(4)^2 + (-8)^2}} \right)$$

$$\therefore \; a_t = -19.67 \text{ m/s}^2$$

$$a_n = \sqrt{a^2 - a_t^2} = \sqrt{(24.33)^2 - (-19.67)^2}$$

$$\therefore \; a_n = 14.319 \text{ m/s}^2$$

But $a_n = \dfrac{v^2}{\rho}$

$$\therefore \; \rho = \frac{v^2}{a_n} = \frac{80}{14.319} \qquad \left(\because \; v = \sqrt{4^2 + 8^2} = \sqrt{80} \right)$$

$$\rho = 5.586 \text{ m}$$

Method II

$$\bar{r} = 2t^2\,\bar{i} + \frac{4}{t^2}\,\bar{j}$$

Differentiating w.r.t. 't',

$$\bar{v} = 4t\,\bar{i} - \frac{8}{t^3}\,\bar{j}$$

Differentiating w.r.t. 't',

$$\therefore \; \bar{a} = 4\,\bar{i} + \frac{24}{t^4}\,\bar{j}$$

At $t = 1$ s,

$$\bar{v} = 4\,\bar{i} - 8\,\bar{j} \qquad \Rightarrow \text{ magnitude } v = \sqrt{4^2 + 8^2} = 8.944 \text{ m/s}$$

$$\because \; \bar{v} = v_x\,\bar{i} + v_y\,\bar{j} \qquad \Rightarrow v_x = 4 \; ; \; v_y = -8$$

$$\bar{a} = 4\,\bar{i} + 24\,\bar{j}$$

$$\because \; \bar{a} = a_x\,\bar{i} + a_y\,\bar{j} \qquad \Rightarrow \text{ magnitude } a = \sqrt{4^2 + 24^2} = 24.33 \text{ m/s}^2$$

$$a_x = 4 \; ; \; a_y = 24$$

$$\rho = \left| \frac{(v_x^{\,2} + v_y^{\,2})^{3/2}}{v_x\,a_y - v_y\,a_x} \right| = \left| \frac{[4^2 + (-8)^2]^{3/2}}{4 \times 24 - (-8)(4)} \right| = 5.59 \text{ m}$$

$$a_n = \frac{v^2}{\rho} = \frac{8.444^2}{5.59}$$

$$\therefore \; a_n = 14.31 \text{ m/s}^2$$

$$a^2 = a_n^{\,2} + a_t^2$$

$$a_t = \sqrt{a^2 - a_n^{\,2}} = \sqrt{(24.33)^2 - (14.31)^2}$$

$$\therefore \; a_t = 19.66 \text{ m/s}^2$$

Problem 3

The position of the charged particle moving in a horizontal plane is measured electronically. This information is fed into a computer which employs a curve fitting techniques to generate analytical expression for its position given by $\overline{r} = t^3\,\overline{i} + t^4\,\overline{j}$ where $\overline{r}$ is in metres and t is in seconds. For $t = 1$ s determine **(i)** the acceleration of the particle in rectangular components, **(ii)** its normal and tangential acceleration, and **(iii)** the radius of curvature of the path.

Solution

$$\overline{r} = t^3\,\overline{i} + t^4\,\overline{j}$$

Differentiating w.r.t. time, we get

$$\overline{v} = 3t^2\,\overline{i} + 4t^3\,\overline{j}$$

Differentiating w.r.t. time, we get

$$\overline{a} = 6t\,\overline{i} + 12t^2\,\overline{j}$$

Putting $t = 1$ s, we get — Magnitude

$$\overline{v} = 3\,\overline{i} + 4\,\overline{j} \quad \Rightarrow \quad v = \sqrt{3^2 + 4^2} = 5 \text{ m/s}$$

$$\overline{a} = 6\,\overline{i} + 12\,\overline{j} \quad \Rightarrow \quad a = \sqrt{6^2 + 12^2} = 13.42 \text{ m/s}^2$$

$v_x = 3$ m/s and $v_y = 4$ m/s

$a_x = 6$ m/s^2 and $a_y = 12$ m/s^2

Radius of curvature,

$$\rho = \left| \frac{(v_x^2 + v_y^2)^{3/2}}{v_x a_y - v_y a_x} \right|$$

$$= \left| \frac{(3^2 + 4^2)^{3/2}}{(3 \times 12) - (4 \times 6)} \right|$$

$$\therefore \rho = 10.42 \text{ m}$$

Normal component of acceleration

$$a_n = \frac{v^2}{\rho} = \frac{5^2}{10.42}$$

$$\therefore a_n = 2.4 \text{ m/s}^2$$

Tangential component of acceleration

$$a_t = \sqrt{a^2 - a_n^2} = \sqrt{13.42^2 - 2.4^2}$$

$$\therefore a_t = 13.2 \text{ m/s}^2$$

Problem 4

A jet plane travels along a parabolic path. When it is at point A it has a speed of 200 m/s which is increasing at the rate of 0.8 m/s^2. Determine the magnitude and direction of acceleration of the plane when it is at A.

Solution

Given : $v = 200$ m/s ; $a_t = \dfrac{dv}{dt} = 0.8$ m/s^2

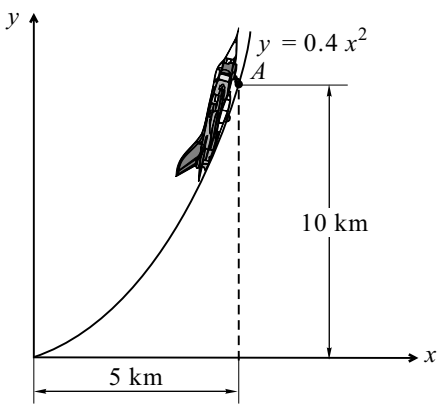

Fig. 11.4(a)

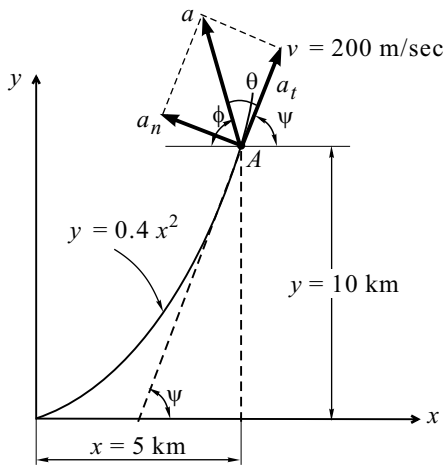

Fig. 11.4(b)

$$a_n = \frac{v^2}{\rho}$$

$$y = 0.4x^2$$

$$\frac{dy}{dx} = 0.8x \qquad \Rightarrow \left(\frac{dy}{dx}\right)_{x=5} = 0.8 \times 5 = 4$$

$$\frac{d^2y}{dx^2} = 0.8 \qquad \Rightarrow \left(\frac{d^2y}{dx^2}\right)_{x=5} = 0.8$$

$$\rho = \left|\frac{\left[1 + \left(\frac{dy}{dx}\right)^2\right]^{3/2}}{\frac{d^2y}{dx^2}}\right| = \left|\frac{\left[1 + (4)^2\right]^{3/2}}{0.8}\right|$$

$$\rho = 87.62 \text{ km}$$

$$a_n = \frac{v^2}{\rho} = \frac{(200)^2}{87.62}$$

$$a_n = 456.52 \text{ km/s}^2 = 0.4562 \text{ m/s}^2$$

$$a = \sqrt{a_t^2 + a_n^2} = \sqrt{(0.8)^2 + (0.4562)^2}$$

$$a = 0.921 \text{ m/s}^2$$

$$\therefore\ a = 0.921 \text{ m/s}^2 \ (\phi)$$

$$\tan\psi = \left(\frac{dy}{dx}\right)_{x=5} = 4$$

$$\psi = 75.96^\circ$$

$$\tan\theta = \frac{a_n}{a_t} = \frac{0.4562}{0.8}$$

$$\theta = 29.69^\circ$$

$$\phi = 180 - (\theta + \psi)$$

$$\phi = 180 - (29.69 + 75.96)$$

$$\therefore\ \phi = 74.35^\circ$$

Problem 5

A point moves along the path $y = \frac{1}{3} x^2$ with a constant speed of 8 m/s. What are the x and y components of the velocity when $x = 3$? What is the acceleration of the point when $x = 3$?

Solution

Given : $v = 8$ m/s is constant;

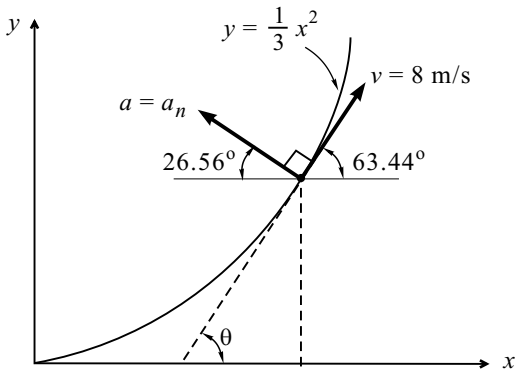

Fig. 11.5

$$a_t = 0 \qquad a_t = \frac{dv}{dt} = 0$$

$$\therefore\ a_n = a \qquad [\because a_t = 0]$$

$$\therefore\ a_n = \frac{v^2}{\rho}$$

$$y = \frac{1}{3} x^2$$

$$\frac{dy}{dx} = \frac{2}{3} x$$

$$\left(\frac{dy}{dx}\right)_{x=3} = \frac{2}{3} \times 3 = 2$$

$$\frac{d^2y}{dx^2} = \frac{2}{3}$$

$$\left(\frac{d^2y}{dx^2}\right)_{x=3} = \frac{2}{3}$$

$$\therefore\ \rho = \left| \frac{\left[1 + \left(\frac{dy}{dx}\right)^2\right]^{3/2}}{\frac{d^2y}{dx^2}} \right| = \left| \frac{\left[1 + (2)^2\right]^{3/2}}{\frac{2}{3}} \right|$$

$$\rho = 16.77 \text{ m}$$

$$a_n = \frac{v^2}{\rho} = \frac{(8)^2}{16.77} = 3.82 \text{ m/s}^2$$

$$\tan\theta = \left(\frac{dy}{dx}\right)_{x=3} = 2$$

$$\theta = 63.44^\circ$$

$$\therefore v_x = v\cos\theta = 8\cos 63.44 = 3.58 \text{ m/s}$$

$$\therefore v_y = v\sin\theta = 8\sin 63.44 = 7.15 \text{ m/s}$$

$$a = \sqrt{a_t^2 + a_n^2} = \sqrt{0 + (3.82)^2}$$

$$\therefore a = 3.82 \text{ m/s}^2 \quad (26.56^\circ)$$

Problem 6

The movement of a particle is governed by $\bar{r} = 2t^2\,\bar{i} + 10t\,\bar{j} + t^3\bar{k}$, where r is in metre units and t is in seconds. Determine the normal and tangential components of acceleration and the radius of curvature of path traced at time $t = 2$ s.

Solution

Given : $\bar{r} = 2t^2\,\bar{i} + 10t\,\bar{j} + t^3\bar{k}$

$$\bar{v} = \frac{d\bar{r}}{dt} = 4t\,\bar{i} + 10\,\bar{j} + 3t^2\,\bar{k} \qquad \bar{a} = \frac{d\bar{v}}{dt} = 4\,\bar{i} + 6t\,\bar{k}$$

At $t = 2$ s

$$\bar{v} = 8\,\bar{i} + 10\,\bar{j} + 12\,\bar{k} \qquad \bar{a} = 4\,\bar{i} + 12\,\bar{k}$$

We know unit vector along tangent direction is given by

$$\hat{e}_t = \frac{\bar{v}}{v} = \frac{8\,\bar{i} + 10\,\bar{j} + 12\,\bar{k}}{\sqrt{8^2 + 10^2 + 12^2}} = \frac{8\,\bar{i} + 10\,\bar{j} + 12\,\bar{k}}{\sqrt{308}}$$

$$a_t = \bar{a} \cdot \hat{e}_t \text{ (Dot product)}$$

$$a_t = (4\,\bar{i} + 12\,\bar{k}) \cdot \left(\frac{8\,\bar{i} + 10\,\bar{j} + 12\,\bar{k}}{\sqrt{308}}\right) = \frac{32 + 144}{\sqrt{308}} = \frac{176}{\sqrt{308}}$$

$$\therefore\ a_t = 10.02 \text{ m/s}^2$$

$$a = \sqrt{4^2 + 12^2} \qquad (\because\ \bar{a} = 4\,\bar{i} + 12\,\bar{k})$$

$$a = 12.649 \text{ m/s}^2$$

$$a^2 = a_t^2 + a_n^2$$

$$a_n = \sqrt{a^2 - a_t^2} = \sqrt{(12.649)^2 - (10.02)^2}$$

$$\therefore\ a_n = 7.72 \text{ m/s}^2$$

Now, $a_n = \dfrac{v^2}{\rho}$

$$\rho = \frac{v^2}{a_n} = \frac{\sqrt{8^2 + 10^2 + 12^2}}{7.72}$$

$$\therefore\ \rho = 39.89 \text{ m}$$

Problem 7

A particle moves in the x-y plane with velocity components $v_x = 8t - 2$ and $v_y = 2$. If it passes through the point $(x, y) = (14, 4)$ at $t = 2$ s, determine the equation of the path traced by the particle. Find also the resultant acceleration at $t = 2$ s.

Solution

Given : $v_x = 8t - 2$; $\quad v_y = 2$

$$\frac{dx}{dt} = 8t - 2\ ; \qquad \frac{dy}{dt} = 2$$

Integrating, we get

$x = 4t^2 - 2t + c_1$

At $t = 2$ s, $x = 14$ m

$14 = 4(2)^2 - 2(2) + c_1$

$c_1 = 2$

$x = 4t^2 - 2t + 2$

$y = 2t + c_2$

At $t = 2$ s, $y = 4$ m

$4 = 2(2) + c_2$

$c_2 = 0$

$y = 2t$

$x = (2t)^2 - 2t + 2$

$x = y^2 - y + 2 \quad (\because y = 2t)$

$\therefore x = y^2 - y + 2$ is the equation of path.

(Any equation of path does not have time)

$\bar{v} = (8t - 2)\,\bar{i} + 2\,\bar{j}$

$\bar{a} = \dfrac{d\bar{v}}{dt} = 8\,\bar{i}$ m/s^2

$\therefore \bar{a} = 8\,\bar{i}$ m/s^2

Problem 8

A rocket follows a path such that its acceleration is given by $\bar{a} = (4\,i + t\,j)$ m/s^2 at $r = 0$, when starts from rest. At $t = 10$ s, determine **(i)** speed of the rocket, **(ii)** radius of curvature of its path, and **(iii)** magnitude of normal and tangential components of acceleration.

Solution

(i) $\bar{a} = 4\,i + t\,j$ at $\bar{r} = 0, \bar{v} = 0, t = 0$

Integrating, we get

$\bar{v} = 4\,t\,i + \dfrac{t^2}{2}\,j + c_1$

At $t = 0, v = 0 \;\therefore\; c_1 = 0$

$\bar{v} = 4\,t\,i + \dfrac{t^2}{2}\,j$

At $t = 10$ s,

$\bar{a} = 4\,i + 10\,j$

$a = \sqrt{4^2 + 10^2}$

$\therefore a = 10.77$ m/s^2

$a_x = 4$ and $a_y = 10$

$\bar{v} = 40\,i + 50\,j$

$v = \sqrt{40^2 + 50^2}$

$\therefore v = 64.03$ m/s^2

(ii) Radius of curvature ρ

$$\rho = \frac{(v_x^2 + v_y^2)^{3/2}}{v_x a_y - v_y a_x}$$

$$\rho = \frac{(40^2 + 50^2)^{3/2}}{40 \times 10 - 50 \times 4}$$

$$\therefore \rho = 1312.64 \text{ m}$$

(iii) Component of normal acceleration a_n

$$a_n = \frac{v^2}{\rho} = \frac{64.03^2}{1312.64}$$

$$a_n = 3.123 \text{ m/s}^2$$

Component of tangential acceleration a_t

$$a_t = \sqrt{a^2 - a_n^2} = \sqrt{10.77^2 - 3.123^2}$$

$$\therefore a_t = 10.31 \text{ m/s}^2$$

Problem 9

A particle moves along a circle of 20 cm radius so that $s = 20\ \pi t^2$ cm. Find its tangential and normal acceleration after it has completed a revolution.

Solution

Given : $s = 20\ \pi t^2$ ..... (I)

For one revolution

$s = 2\pi \times r = 2\pi \times 20$

From Eq. (I), we get

$2\pi \times 20 = 20\ \pi t^2$

$t = 1.414$ s

Differentiating Eq. (I), we get

$v = 2 \times 20\pi\ t$ ..... (II)

$v = 40 \times \pi \times 1.414$

$v = 177.69$ cm/s

Now, we have

$$a_n = \frac{v^2}{\rho} = \frac{(177.69)^2}{2}$$

$$\therefore a_n = 1578.66 \text{ cm/s}^2$$

Differentiating Eq. (II) w.r.t. time, we get

$a_t = 40 \times \pi$

$$\therefore a_t = 125.66 \text{ cm/s}^2$$

Problem 10

A particle moves along a circular track with constant tangential acceleration of 0.28 m/s^2. It starts at rest from a point A shown in Fig. 11.10(a). Find the velocity and acceleration components of the particle along x and y directions when it reaches point B.

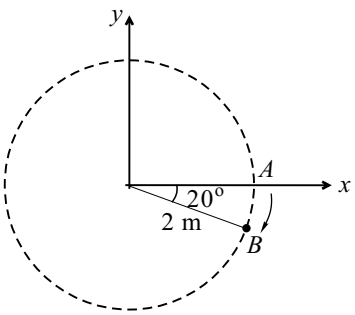

Fig. 11.10(a)

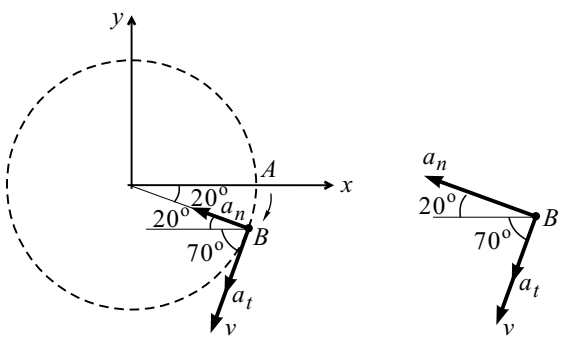

Fig. 11.10(b)

Solution

Given : $a_t = 0.28$ m/s^2 ; $u = 0$; $v = ?$

$$s = r\theta = 2 \times \left(20 \times \frac{\pi}{180}\right) \qquad \left[\because \; 1^\circ = \left(\frac{\pi}{180}\right)^c \quad 20^\circ = \left(\frac{\pi}{180} \times 20\right)^c\right]$$

$$s = 0.698 \text{ m}$$

$$v^2 = u^2 + 2as$$

$$v^2 = 0 + 2(0.28)\,(0.698)$$

$$\therefore v = 0.625 \text{ m/s}$$

$$v_x = -v \cos 70^\circ = -0.625 \times \cos 70^\circ = -0.213 \text{ m/s}$$

$$v_y = -v \sin 70^\circ = -0.625 \times \sin 70^\circ = -0.587 \text{ m/s}$$

$$a_t = 0.28 \text{ m/s}^2$$

$$a_n = \frac{v^2}{\rho} = \frac{(0.625)^2}{2}$$

$$a_n = 0.1953 \text{ m/s}^2$$

$$a_x = -a_n \cos 20^\circ - a_t \cos 70^\circ$$

$$= -0.1953 \cos 20^\circ - 0.28 \cos 70^\circ$$

$$\therefore a_x = -0.2793 \text{ m/s}^2$$

$$a_y = +a_n \sin 20^\circ - a_t \sin 70^\circ$$

$$= 0.1953 \sin 20^\circ - 0.28 \sin 70^\circ$$

$$\therefore a_y = -0.1963 \text{ m/s}^2$$

Problem 11

A particle moves along a hyperbolic path $\frac{x^2}{16} - y^2 = 28$. If the x-component of velocity is $v_x = 4$ m/s and remains constant, determine the magnitudes of particles velocity and acceleration of the particle when it is at point (32, 6) m.

Solution

Given : $v_x = 4$ m/s is constant $\quad \therefore \quad a_x = 0$ or $\frac{d^2x}{dt^2} = 0$

$$\frac{x^2}{16} - y^2 = 28$$

Differentiating with respect to t, we get

$$\frac{2x}{16}\frac{dx}{dt} - 2y \cdot \frac{dy}{dt} = 0$$

$$\frac{x}{8}\frac{dx}{dt} - 2y \cdot \frac{dy}{dt} = 0 \qquad \text{..... (I)}$$

$$\frac{32}{8} v_x - 2 \times 6 \cdot v_y = 0$$

$$4 \times 4 - 12\, v_y = 0$$

$$v_y = 1.33 \text{ m/s}$$

$$v = \sqrt{v_x^2 + v_y^2} = \sqrt{4^2 + 1.33^2}$$

$$\therefore \quad v = 4.22 \text{ m/s}$$

We have Eq. (I),

$$\frac{x}{8}\frac{dx}{dt} - 2y \cdot \frac{dy}{dt} = 0$$

Again differentiating with respect to t, we get

$$\frac{1}{8} \cdot \left[x \cdot \frac{d^2x}{dt^2} + \frac{dx}{dt} \cdot \frac{dx}{dt}\right] - 2\left[y \cdot \frac{d^2y}{dt^2} + \frac{dy}{dt} \cdot \frac{dy}{dt}\right] = 0$$

$$\frac{1}{8} \cdot \left[32 \cdot \frac{d^2x}{dt^2} + (4)^2\right] - 2\left[6 \cdot \frac{d^2y}{dt^2} + (1.33)^2\right] = 0$$

$$\frac{1}{8} \cdot [32 \times 0 + 16] - 2\,[6 \cdot a_y + (1.33)^2] = 0$$

$$a_y = -0.129 \text{ m/s}^2$$

$$a = \sqrt{a_x^2 + a_y^2} = \sqrt{0 + (-0.129)^2}$$

$$\therefore \quad a = 0.129 \text{ m/s}^2$$

$$\left[\begin{array}{l} \because \; P(32, 6) \text{ m} \\ \therefore \; x = 32, \; y = 6 \\ \quad \frac{dy}{dx} = v_x = 4 \text{ m/s} \\ \quad \frac{dy}{dt} = v_y = 1.33 \text{ m/s} \\ \quad \frac{d^2x}{dt^2} = 0 \end{array}\right]$$

Problem 12

A car travels along a vertical curve on a road, the equation of the curve being $x^2 = 200y$ (x-horizontal and y-vertical distances in m). The speed of the car is constant and equal to 72 km/h. **(i)** Find its acceleration when the car is at the deepest point on the curve, **(ii)** What is the radius of curvature of the curve at this point ?

Solution

$$x^2 = 200y$$

$$y = \frac{x^2}{200}$$

$$v = 72 \text{ km/h} = 72 \times \frac{5}{18} \text{ m/s}$$

$$v = 20 \text{ m/s (constant)}$$

Now, $a_t = 0$

$$y = \frac{x^2}{200}$$

$$\frac{dy}{dx} = \frac{1}{200}(2x)$$

$$\left(\frac{dy}{dx}\right)_{\text{at } x = 0} = 0$$

$$\left(\frac{d^2y}{dx^2}\right)_{\text{at } x = 0} = \frac{1}{100}$$

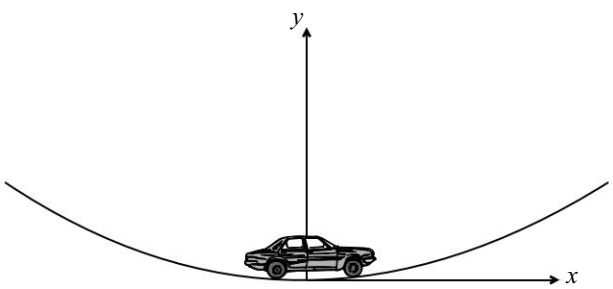

Fig. 11.12

$$\rho = \left| \frac{\left[1 + \left(\frac{dy}{dx}\right)^2\right]^{3/2}}{\frac{d^2y}{dx^2}} \right| = \left| \frac{\left[1 + (0)^2\right]^{3/2}}{\frac{1}{100}} \right|$$

$$\therefore \rho = 100 \text{ m}$$

$$a_n = \frac{v^2}{\rho} = \frac{(20)^2}{100}$$

$$\therefore a_n = 4 \text{ m/s}^2$$

Problem 13

A point moves along the path $y = \frac{x^2}{3}$ with a constant speed of 8 m/s. What are the x and y components of the velocity when $x = 3$? What is the acceleration of the point when $x = 3$?

Solution

Given : $y = \frac{x^2}{3}$

At $x = 3$

$$\frac{dy}{dx} = \frac{2x}{3} = 2 \; ; \quad \frac{d^2y}{dx} = \frac{2}{3}.$$

Now, $\tan\theta = \frac{dy}{dx} \Rightarrow \theta = 63.43^\circ$

(i) θ is the inclination of velocity with horizontal when $x = 3$

x component of velocity

$v_x = v \cos\theta = 8 \cos 63.43^\circ$

$\therefore v_x = 3.58$ m/s

and

y component of velocity

$v_y = v \sin\theta = 8 \sin 63.43^\circ$

$v_y = 7.16$ m/s

(ii) Velocity is constant

$$a_t = \frac{dy}{dx} = 0$$

$$\rho = \left| \frac{\left[1 + \left(\frac{dy}{dx}\right)^2\right]^{3/2}}{\frac{d^2y}{dx^2}} \right| = \left| \frac{\left[1 + (2)^2\right]^{3/2}}{\frac{2}{3}} \right| \quad \therefore \rho = 16.77 \text{ m}$$

$$a_n = \frac{v^2}{\rho} = \frac{8^2}{16.77} \Rightarrow a_n = 3.82 \text{ m/s}$$

$$a = \sqrt{a_n^2 + a_t^2} = \sqrt{(3.82)^2 + (0)^2} \quad \therefore a = 3.82 \text{ m/s}^2$$

Problem 14

A particle travels along the path defined by the parabola $y = 0.5x^2$. If the x component of velocity is $v_x = 5t$ m/s, determine the particles distance from the origin 0 and the magnitude of acceleration when $t = 1$ s, when $t = 0$, $x = 0$, $v = 0$.

Solution

(i) $v_x = 5t$

$$\frac{dx}{dt} = 5t$$

$$\int dx = \int 5t$$

$$x = 5\frac{t^2}{2} + c$$

When $t = 0$, $x = 0$

$0 = 0 + c$

$c = 0$

$$x = \frac{5}{2}t^2$$

When $t = 1$ s

$$x = \frac{5}{2}(1)^2 = \frac{5}{2}$$

$\therefore x = 2.5$ m

$y = 0.5x^2 = 0.5(2.5)^2$

$\therefore y = 3.125$ m

Particle distance from origin = (2.5, 3.125) m

(ii) $y = 0.5x^2$

$$\frac{dy}{dt} = 0.5(2x)\frac{dx}{dt}$$

$$\frac{dy}{dt} = x \times \frac{dx}{dt}$$

$$\frac{dy}{dt} = x(5t) = \left(\frac{5}{2}t^2\right)(5t)$$

$$v_y = \frac{dy}{dt} = \frac{25}{2}t^3$$

$$a_y = \frac{d^2y}{dt^2} = \frac{25}{2} \times (3t^2) \Rightarrow a_y = \frac{75}{2}t^2$$

When $t = 1$ s

$$a_y = \frac{75}{2}(1)^2 \quad \therefore a_y = 37.5 \text{ m/s}^2$$

$$v_x = \frac{dx}{dt} = 5t$$

$$a_x = \frac{d^2x}{dt^2} = 5 \quad \therefore a_x = 5 \text{ m/s}^2$$

$$a = \sqrt{a_x^2 + a_y^2} = \sqrt{(5)^2 + (37.5)^2}$$

$\therefore a = 37.83$ m/s^2

Problem 15

A particle is projected from the ground at 50 m/s at an angle of $\tan^{-1}$ (4/3) to the horizontal. Determine the tangential and normal components of acceleration of the particle 1.5 s after the throw. Also determine the radius of curvature of the path. State when and where the radius of curvature of the path is minimum and find its magnitude.

Solution

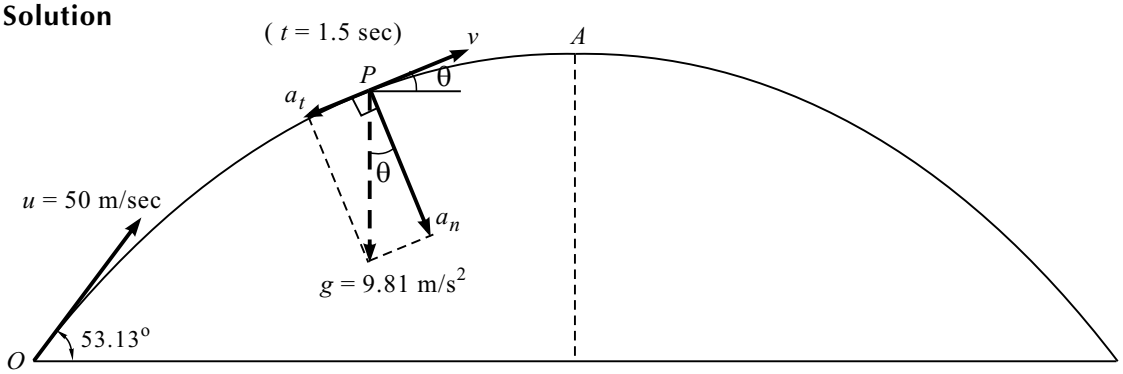

Fig. 11.15

Let P be the position of particle attained after time interval t = 1.5 s. This is a special case of curvilinear motion (i.e., projectile motion)

Net acceleration $a = g = 9.81$ m/s^2 (↓)

For projectile motion horizontal component is always constant

$v \cos\theta = 50 \cos 53.13^\circ$

$v \cos\theta = 30$ m/s ..... (I)

Consider vertical motion under gravity from O to P

$v = u + gt$

$v \sin\theta = 50 \sin 53.13^\circ - 9.81 \times 1.5$

$v \sin\theta = 25.28$ ..... (II)

Dividing Eq. (II) by Eq. (I), we get

$\tan\theta = \left(\dfrac{25.28}{30}\right) \quad \therefore \theta = 40.12^\circ$

$a_t = g \sin\theta = 9.81 \sin 40.12^\circ$

$\therefore a_t = 6.32$ m/s^2

$a_n = g \cos\theta = 9.81 \cos 40.12^\circ$

$a_n = 7.5$ m/s^2 $\qquad \because v \cos 40.12^\circ = 30$

$\therefore v = 39.23$ m/s

$\therefore a_n = \dfrac{v^2}{R}$

$\rho = \dfrac{v^2}{a_n} = \dfrac{(39.23)^2}{7.5}$

$\therefore \rho = 205.2$ m

To find the point where the radius of curvature of the path is minimum and its magnitude.

When the particle reaches to maximum height in projectile motion its velocity is minimum and $g = a_n = 9.81$ m/s^2 is maximum.

$$\because \ \rho = \frac{v^2}{a_n}$$

$\therefore$ ρ is minimum at this position

$$\therefore \ \rho_{min} = \frac{30^2}{9.81} = 91.74 \text{ m}$$

Consider vertical motion under gravity from O to A

$$v = u + gt$$

$$0 = 50 \sin 53.13^o - 9.81 \times t \qquad \therefore \ t = 4.08 \text{ s}$$

Horizontal Distance

$$x = u \cos \theta \times t$$

$$x = 50 \cos 53.13^o \times 4.08$$

$$\therefore x = 122.4 \text{ m}$$

and

Vertical Distance

$$h = ut + \frac{1}{2} gt^2$$

$$y = 50 \sin 53.13^o \times 4.08 - \frac{1}{2} \times 9.81 \times (4.08)^2$$

$$y = 81.55 \text{ m}$$

11.2 PROJECTILE MOTION

If a particle is freely thrown in air along any direction, other than vertical it will follow a curved path which is parabolic in nature. This motion is called *projectile motion* and the path traced by projectile is called its *trajectory* (Neglecting the effect of air resistance).

Projectile motion is the combination of horizontal and vertical motion happening simultaneously. When the particle is projected, we can say that the only force acting on the particle is the gravitational force, which is acting vertically downward. This gravitational force produces a change in the vertical component of velocity of the particle. However, the horizontal component of its velocity remains constant. Thus, we may conclude that for a projectile

$$a_x = 0 \text{ and } a_y = g = 9.81 \text{ m/s}^2 (\downarrow)$$

Thus, projectile motion is a combination of horizontal motion with constant velocity and vertical motion under gravity.

1. General Equation of Projectile Motion

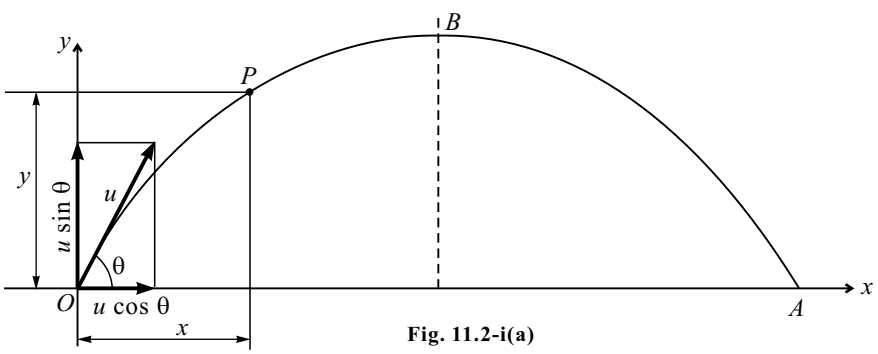

Fig. 11.2-i(a)

Consider the particle to be freely thrown from point O (point of projection) at angle θ (angle of projection) with velocity u (velocity of projection). Let $P(x, y)$ be the projection of the particle after a time t.

Considering horizontal motion with constant velocity, we have

$$\text{Displacement} = \text{Velocity} \times \text{Time}$$

$$x = (u \cos \theta) \times (t)$$

$$\therefore \; t = \frac{x}{u \cos \theta}$$

Considering vertical motion under gravity, we have

$$h = ut - \frac{1}{2} g t^2$$

$$y = u \sin \theta \times \frac{x}{u \cos \theta} - \frac{1}{2} g \left(\frac{x}{u \cos \theta} \right)^2$$

$$y = x \tan \theta - \frac{g x^2}{2u^2} (1 + \tan^2 \theta)$$

The above equation is of the form $y = Ax + Bx^2$ and represents a parabola. Thus, the path of projectile is a parabola and this equation is called the *general equation of projectile motion*.

2. Sign Convention for General Equation of Projectile Motion

y with respect to point of projection upward (+ve)

y with respect to point of projection downward (−ve)

θ angle of projection elevation ∠θ (+ve)

θ angle of projection depression ∇θ (−ve)

Some relations can be directly used when point of projection and point of target lies at same horizontal level.

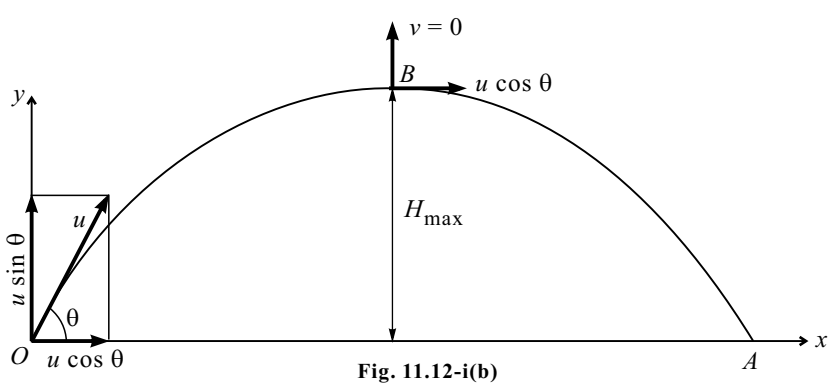

Fig. 11.12-i(b)

O = Point of projection

A = Point of target

OA = Range

B = Maximum height of projection

θ = Angle of projection

u = Velocity of projection

- **Time of Flight (T) :** The time taken by projectile to move from point of projection to point of target is called as *time of flight*.

  Consider vertical motion from O to A under gravity.

$$h = ut + \frac{1}{2}gt^2$$

$$0 = u \sin\theta \times T - \frac{1}{2}gT^2$$

$$T = \frac{2u \sin\theta}{g}$$

- **Range (R) :** The distance from point of projection to point of target is called the *range*.

  Consider horizontal motion from O to A with constant velocity.

$$\text{Displacement} = \text{Velocity} \times \text{Time}$$

$$R = u \sin\theta \times T = u \sin\theta \times \frac{2u \sin\theta}{g}$$

$$R = \frac{2u^2 \sin 2\theta}{g}$$

For maximum range

$$R_{max} = \frac{u^2}{g} \qquad \left[\sin 2\theta = 1 \Rightarrow 2\theta = 90^\circ \quad \therefore \ \theta = 45^\circ\right]$$

- **Maximum Height (H_{max}) :** When projectile reaches to its maximum height, vertical component of velocity at point B becomes zero. Consider vertical motion from O to B under gravity.

$$v^2 = u^2 + 2gh$$

$$0 = u^2 \sin^2\theta - 2gH_{max}$$

$$H_{max} = \frac{u^2 \sin^2\theta}{2g}$$

Note : If two projectiles are having same velocity of projection but complementary angle of projection then range of both projectiles will be same.

$$R_1 = \frac{u^2 \sin 2\theta}{g} \qquad R_2 = \frac{u^2 \sin 2(90-\theta)}{g} = \frac{u^2 \sin(180-2\theta)}{g}$$

$$R_2 = \frac{u^2 \sin 2\theta}{g}$$

3. Projectile Motion is a Special Case of Curvilinear Motion

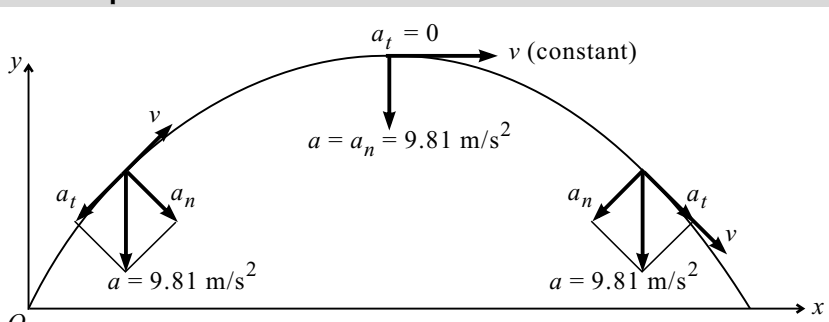

Fig. 11.2-i(c)

In projectile motion net acceleration due to gravity, i.e., $g = 9.81$ m/s^2 (↓).

Hence a_t and a_n are the components of net acceleration $a = g = 9.81$ m/s^2 (↓).

Velocity is always tangential.

Radius of curvature $\rho = \dfrac{v^2}{a_n}$

Radius of curvature will be minimum at top most point of projectile since $a_n = g = 9.81$ m/s^2 is the maximum value

$$\rho_{min} = \frac{v^2}{9.81}$$

Solved Problems Based on Projectile Motion

Problem 16

A ball is thrown from horizontal level, such that it clears a wall 6 m high, situated at a horizontal distance of 35 m as shown in Fig. 11.16. If the angle of projection is 60° with respect to the horizontal, what should be the minimum velocity of projection ?

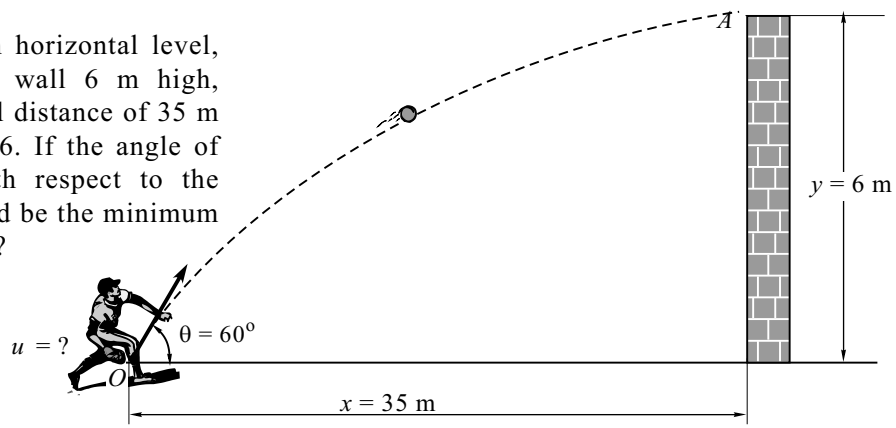

Fig.11.16

Solution

Using general equation of projectile motion,

$$y = x \cdot \tan\theta - \frac{gx^2}{2u^2}(1 + \tan^2\theta)$$

$$6 = 35 \tan 60^\circ - \frac{9.81 \times 35^2}{2u^2}[1 + \tan^2(60^\circ)]$$

$$\therefore u = 20.98 \text{ m/s}$$

Problem 17

A ball is thrown from top of building with speed 12 m/s at angle of depression 30° with horizontal, strikes the ground 11.3 m horizontally from foot of the building as shown in Fig. 11.17. Determine height of building.

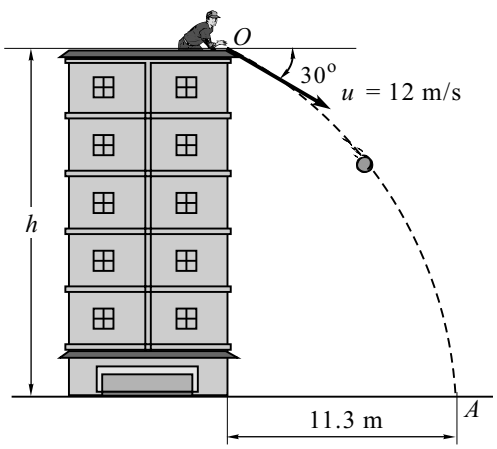

Fig. 11.17

Solution

Method I

Given : $y = -h$, $x = 11.3$ m, $\theta = -30^\circ$, $u = 12$ m/s

By using general equation of projectile motion

$$y = x \tan\theta - \frac{gx^2}{2u^2}(1 + \tan^2\theta)$$

$$-h = 11.3 \tan(-30)^o - \frac{9.81 \times 11.3^2}{2 \times 12^2}[1 + \tan^2(-30)^o]$$

$\therefore h = 12.32$ m

Method II

Let t be the time of flight. Consider horizontal motion with constant velocity

$s = v \times t$

$x = u \cos\theta \times t$

$11.3 = 12 \cos 30^o \times t$

$t = 1.087$ sec

Consider vertical motion under gravity.

$$h = ut + \frac{1}{2}gt^2$$

$$h = 12 \sin 30^o \times 1.087 + \frac{1}{2} \times 9.81 \times (1.08)^2$$

$\therefore h = 12.32$ m

Problem 18

An aeroplane is flying in horizontal direction with a velocity of 540 km/hr and at a height of 2200 m as shown in Fig.11.18. When it is vertically above the point A on the ground, a body is dropped from it. The body strikes the ground at point B. Calculate the distance AB (ignore air resistance). Also find velocity at B and time taken to reach B.

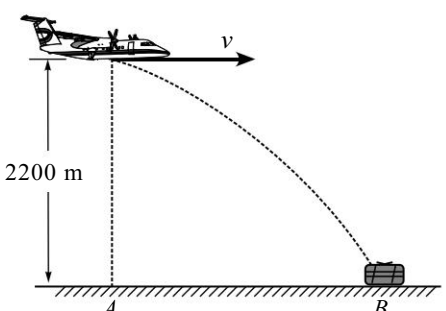

Fig. 11.18(a)

Solution

By general equation of projectile motion,

$$y = x \tan\theta - \frac{gx^2}{2u^2}(1 + \tan^2\theta)$$

$$-2200 = x \tan 0^o - \frac{9.81 \times x^2}{2 \times 150^2}(1 + \tan^2 0^o)$$

$\therefore x = 3176.75$ m (Distance AB)

Consider horizontal motion with constant velocity

Displacement = Velocity × Time

$3176.75 = 150 \times t$

$\therefore t = 21.18$ sec (Time taken to reach B)

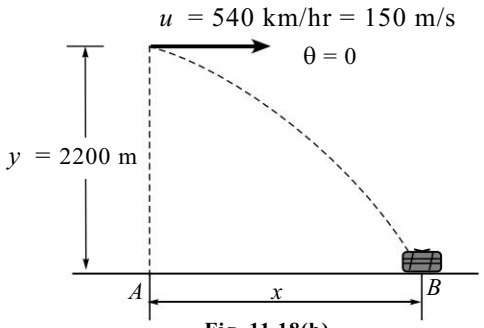

Fig. 11.18(b)

Considering vertical motion under gravity,

$$v_{y_B}^{\ 2} = u^2 + 2gh$$

$$v_{y_B}^{\ 2} = 0 + 2 \times 9.81 \times 2200$$

$$v_{y_B} = 207.76 \text{ m/s} \quad (\downarrow)$$

Considering horizontal constant velocity,

$$v_{x_B} = 150 \text{ m/s} \quad (\rightarrow)$$

$$\tan\theta = \frac{v_{y_B}}{v_{x_B}} = \frac{207.76}{150}$$

$$\theta = 54.17^\circ$$

$$v_B = \sqrt{(v_{x_B})^2 + (v_{y_B})^2}$$

$$= \sqrt{(150)^2 + (207.76)^2}$$

$$\therefore v_B = 256.25 \text{ m/s} \quad (\searrow \theta)$$

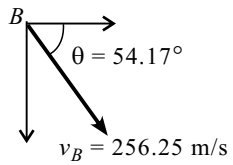

Fig. 11.18(c)

Problem 19

A ball thrown by a boy in the street is caught by another boy on a balcony 4 m above the ground and 18 m away after 2 s as shown in Fig. 11. 19. Calculate the initial velocity and the angle of projection.

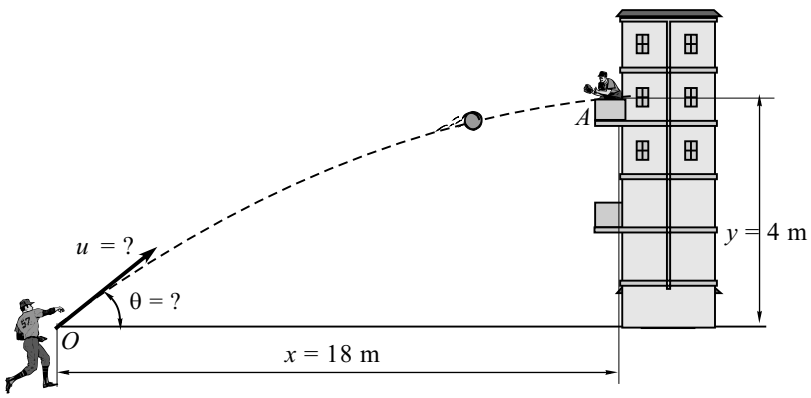

Fig. 11.19

Solution

Consider the vertical motion under gravity,

$$h = ut + \frac{1}{2} gt^2$$

$$4 = 4 \sin\theta \times 2 - \frac{1}{2} \times 9.81 \times (2)^2$$

$$u \sin\theta = 11.81 \qquad \text{..... (I)}$$

Consider horizontal motion with constant velocity,

$s = v \times t$

$18 = u \cos\theta \times 2$

$u \cos\theta = 9$ ..... (II)

Dividing Eq. (I) by Eq. (II),

$$\tan\theta = \frac{11.81}{9} = 1.312$$

$\therefore \theta = 52.69^{o}$

From Eq. (1),

$u \sin 52.69^{o} = 11.81$

$\therefore u = 14.85$ m/s

Problem 20

The water sprinkler positioned at the base of a hill releases a stream of water with a velocity of 6 m/s as shown in Fig. 11.20(a). Determine the point $B(x, y)$ where the water particles strike the ground on the hill. Assume that the hill is defined by the equation $y = 0.2\,x^2$ m, and neglect the size of the sprinkler.

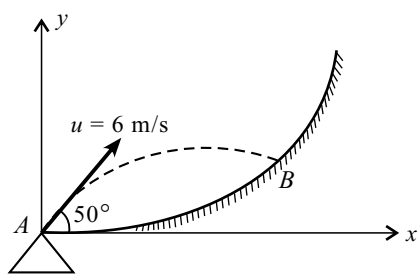

Fig. 11.20(a)

Solution

Given : $y = 0.2\,x^2$ ..... (I)

By general equation of projectile motion, we have

$$y = x \tan\theta - \frac{gx^2}{2u^2}(1 + \tan^2\theta)$$

$$y = x \tan 50 - \frac{9.81 \times x^2}{2 \times 6^2}(1 + \tan^2 50) \quad \text{..... (II)}$$

$y = 1.192\,x - 0.33\,x^2$

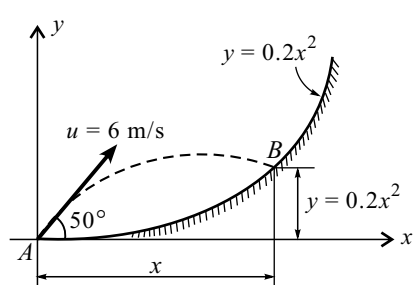

Fig. 11.20(b)

From Eq. (I),

$0.2\,x^2 = 1.192\,x - 0.33\,x^2$

$0.53\,x^2 = 1.192\,x$

$x = 2.25$ m

From Eq. (II),

$y = 1.192 \times 2.25 - 0.33 \times 2.25^2 = 1.0114$ m

$\therefore B(2.25, 1.0114)$ m

Problem 21

A ball is projected from the top of a tower of 110 m height with a velocity of 100 m/s and at an angle of elevation 25° to the horizontal as shown in Fig. 11.21(a). Neglecting the air resistance, find **(i)** the maximum height the ball will rise from the ground, **(ii)** the horizontal distance it will travel just before it strikes the ground, and **(iii)** the velocity with which it will strike the ground.

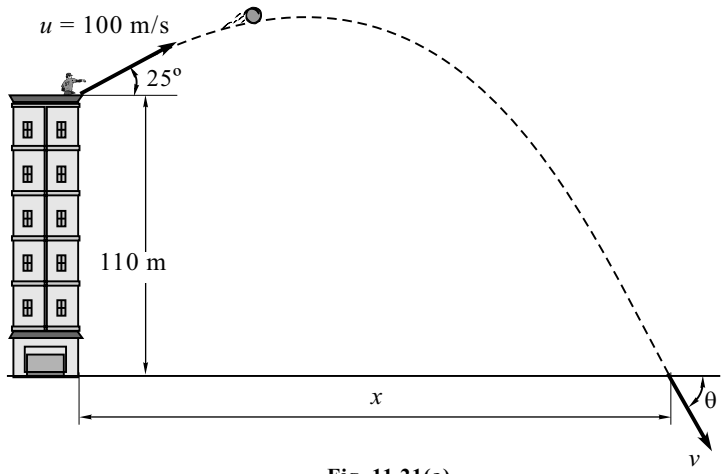

Fig. 11.21(a)

Solution

$$H_{max} = \frac{u^2 \sin^2 \theta}{2g} = \frac{15^2 \sin^2 25^\circ}{2 \times 9.81}$$

$$H_{max} = 91.03 \text{ m}$$

Maximum height the ball will rise from the ground

$$h = H_{max} + 110$$

$$\therefore h = 201.03 \text{ m}$$

Consider vertical motion under gravity,

$$h = ut + \frac{1}{2} gt^2$$

$$-110 = 100 \sin 25^\circ \times t - \frac{1}{2} \times 9.81 \times t^2$$

$$t = 10.71 \text{ sec}$$

Now, projectile horizontal motion happens with constant velocity,

Displacement = Velocity × Time

$$x = 100 \cos 25^\circ \times 10.71$$

$$\therefore x = 970.66 \text{ m}$$

To find the velocity with which the ball strikes the ground:

$$v_x = 10 \cos 25^\circ = 90.63 \text{ m/s } (\rightarrow)$$

$$-v_y = 100 \sin 25^\circ - 9.81 \times 10.71$$

$$v_y = 62.8 \text{ m/s } (\downarrow)$$

$$\tan \theta = \frac{v_y}{v_x} = \frac{62.8}{90.63} \qquad \therefore \theta = 34.72^\circ$$

$$v = \sqrt{v_x^2 + v_y^2} = \sqrt{90.63^2 + 62.8^2}$$

$$\therefore v = 110.26 \text{ m/s } (\searrow \theta)$$

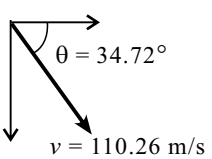

Fig. 11.21(b)

Problem 22

An object is projected so that it must clear two obstacles each 7.5 m high which are situated 50 m from each other as shown in Fig. 11.22. If the time of passing between the obstacles is 2.5 s, calculate the complete range of projection and the initial velocity of projection.

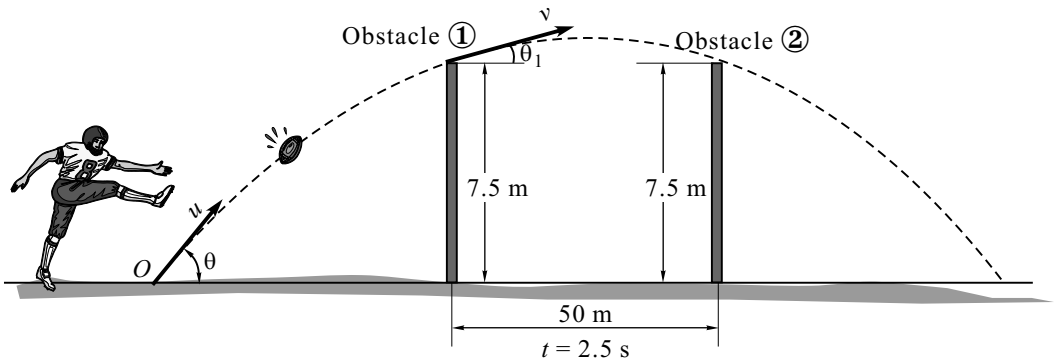

Fig. 11.22

Solution

Consider horizontal motion from obstacle ① to ②.

$s = v \times t$

$50 = v \cos \theta_1 \times 2.5$

$v \cos \theta_1 = 20$ m/s

$v \cos \theta_1 = u \cos \theta = 20$ m/s .....(I) ...(Horizontal component of velocity is always constant)

Consider vertical motion from obstacle ① to ②.

$h = ut + \frac{1}{2} gt^2$

$0 = v \sin \theta_1 \times 2.5 - \frac{1}{2} \times 9.81 \times 2.5^2$

$v \sin \theta_1 = 12.26$ m/s

Consider vertical motion from point O to obstacle ①.

$v^2 = u^2 + 2gh$

$(12.26)^2 = (u \sin \theta)^2 - 2 \times 9.81 \times 7.5$

$u \sin \theta = 17.25$ ..... (II)

Dividing Eq. (II) by Eq. (I), we get

$\tan \theta = \frac{17.25}{20} = 0.8625 \quad \therefore \theta = 40.78^\circ$

From Eq. (I), we have $u \cos \theta = 20$

$u = \frac{20}{\cos 40.78^\circ} \quad \therefore u = 26.41$ m/s

Range $R = \frac{u^2 \sin 2\theta}{g} = \frac{(26.41)^2 \sin (2 \times 40.78)^\circ}{9.81}$

$\therefore R = 70.33$ m

Problem 23

A boy throws a ball so that it may just clear a 3.6 m high wall. The boy is at a distance of 4.8 m from the wall. The ball was found to hit the ground at a distance of 3.6 m on the other side of the wall. Find the least velocity with which the ball can be thrown.

Solution

Refer to Fig. 11.23.

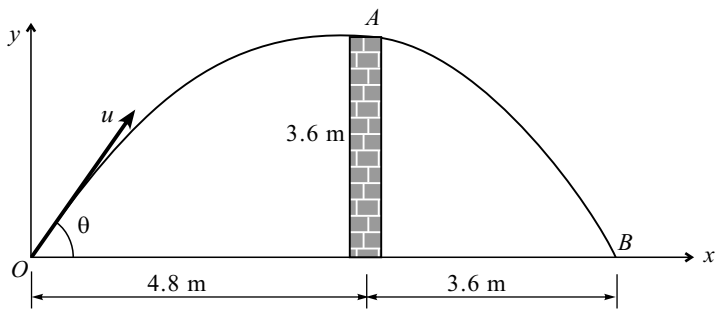

Fig. 11.23

Consider projectile motion.

From O to A

$$y = x \tan\theta - \frac{gx^2}{2u^2 \cos^2\theta}$$

$$3.6 = 4.8 \tan\theta - \frac{9.81 \times 4.8^2}{2u^2 \cos^2\theta} \quad \text{... (I)}$$

From O to B

$$y = x \tan\theta - \frac{gx^2}{2u^2 \cos^2\theta}$$

$$0 = 8.4 \tan\theta - \frac{9.81 \times 8.4^2}{2u^2 \cos^2\theta}$$

$$2u^2 \cos^2\theta = \frac{9.81 \times 8.4^2}{8.4 \tan\theta} \quad \text{... (II)}$$

From Eqs. (I) and (II), we get

$$3.6 = 4.8 \tan\theta - \frac{9.81 \times 4.8^2}{9.81 \times 8.4^2} \times 8.4 \tan\theta$$

$$3.6 = 4.8 \tan\theta - 2.743 \tan\theta$$

$$3.6 = 2.057 \tan\theta$$

$$\therefore \quad \theta = 60.26^\circ$$

From Eq. (II), we have

$$u^2 = \frac{9.81 \times 8.4^2}{8.4 \tan\theta \times \cos^2\theta}$$

$$u^2 = 95.66$$

$$\therefore \quad u = 9.78 \text{ m/s} \quad (\measuredangle 60.26^\circ)$$

Problem 24

A particle projected from point A with the angle of projection equal to 15º, falls short of a mark B on the horizontal plane through A by 22.5 and when the angle of projection is 45º it falls beyond B by same distance as shown in Fig. 11.24. Show that for the particle to fall exactly at B, the angle of projection must be $\frac{1}{2}\sin^{-1}\left(\frac{3}{4}\right)$, the velocity of projection being the same in all the three cases. Also determine the velocity of projection.

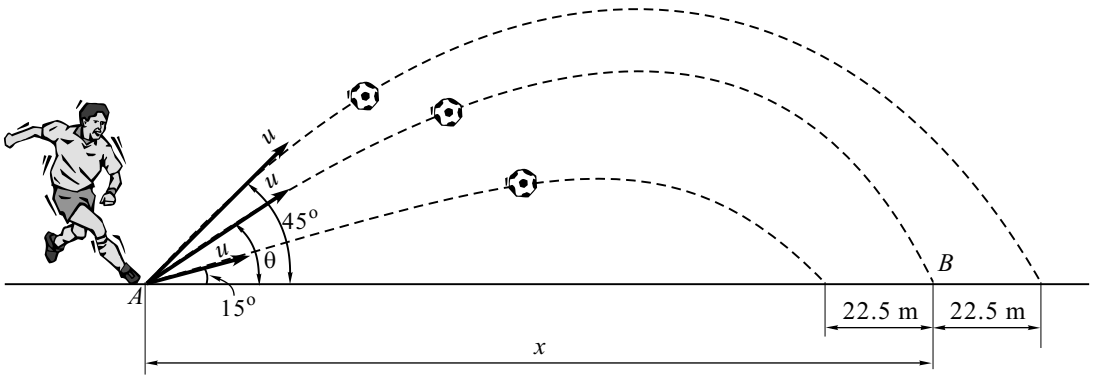

Fig. 11.24

Solution

When $\theta = 15^o$ Range $= (x - 22.5)$; when $\theta = 45^o$ Range $= (x + 22.5)$

$$\text{Range} = \frac{u^2 \sin 2\theta}{g} \qquad \therefore\ x - 22.5 = \frac{u^2 \sin (2 \times 15)^o}{9.81} \qquad \text{..... (I)}$$

$$\therefore\ x + 22.5 = \frac{u^2 \sin (2 \times 45)^o}{9.81} \qquad \text{..... (II)}$$

Now, dividing Eq. (I) by Eq. (II), we get

$$\frac{x - 22.5}{x + 22.5} = \frac{\sin 30^o}{\sin 90^o}$$

$$x - 22.5 = (x + 22.5)\ 0.5$$

$$x - 0.5x = 22.5 + 11.25$$

$$0.5x = 33.75$$

$$\therefore\ x = 67.5 \text{ m}$$

From Eq. (I),

$$67.5 - 22.5 = \frac{u^2 \sin 30^o}{9.81} \qquad \therefore\ u = 29.71 \text{ m/s}$$

$$\text{Now, Range } x = \frac{u^2 \sin 2\theta}{g}$$

$$67.5 = \frac{(29.71)^2 \sin 2\theta}{9.81}$$

$$\sin 2\theta = 0.75 = \frac{3}{4}$$

$$2\theta = \sin^{-1}\left(\frac{3}{4}\right) \qquad \therefore\ \theta = \frac{1}{2}\sin^{-1}\left(\frac{3}{4}\right) \qquad \text{Hence proved.}$$

Problem 25

A block of ice starts sliding down from the top of the inclined roof of a house (angle of inclination of roof is 30° with the horizontal) along a line of maximum slope as shown in Fig. 11.25. The highest and lowest points of the roof are at heights of 10.9 m and 8.4 m respectively from the ground. At what horizontal distance from the starting point will the block hit the ground? (Neglect friction)

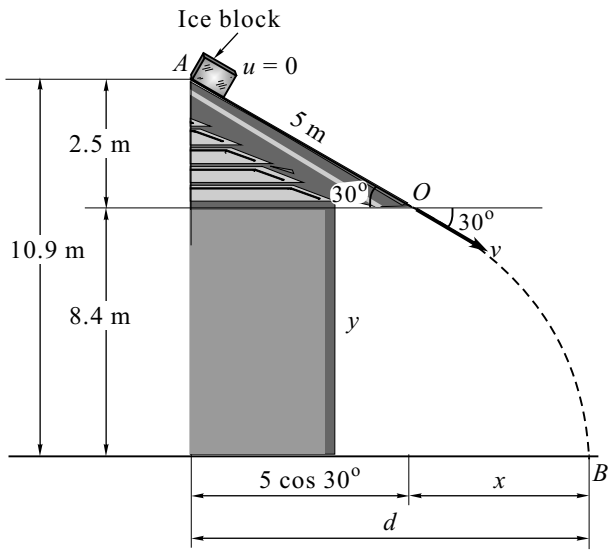

Fig. 11.25

Solution

Motion of ice block from A to O

$v^2 = u^2 + 2as$

$v^2 = 0 + 2 \times 9.81 \sin 30^\circ \times 5$

$v = 7$ m/s

Motion from O to B is projectile motion.

By general equation of projectile motion, we have

$$y = x \tan \theta - \frac{gx^2}{2u^2}(1 + \tan^2 \theta)$$

$$-8.4 = x \tan(-30)^\circ - \frac{9.81 \times (x)^2}{2 \times 7^2}[1 + \tan^2(-30)^\circ]$$

$x = 6.06$ m

Distance from starting point

$d = 5 \cos 30^\circ + x$

$d = 5 \cos 30^\circ + 6.06$

$\therefore d = 10.39$ m

Problem 26

A shell bursts on contact with ground and fragments fly in all directions with speed up to 30 m/s. If a man is 40 m away from the spot as shown in Fig. 11.26, find for how long he is in danger.

Solution

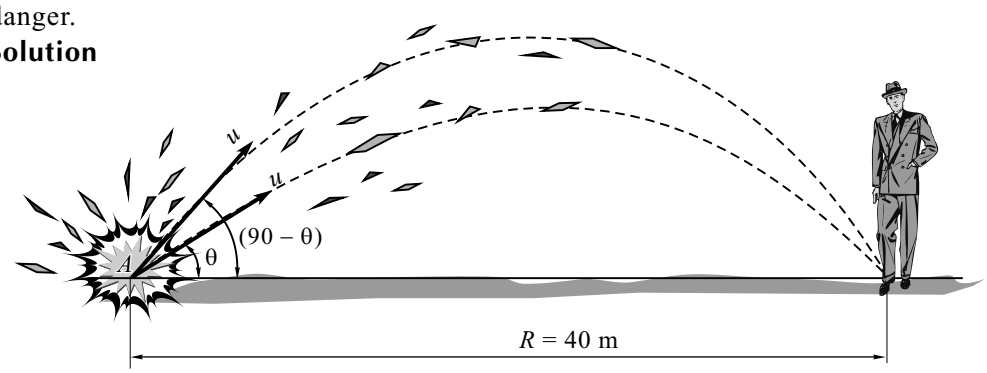

Fig. 11.26

Note : For same range and same initial velocity, θ and (90 – θ) are the two values of angle of projection but time of flight differs.

$$\text{Range } R = \frac{u^2 \sin 2\theta}{g}$$

$$40 = \frac{(30)^2 \sin 2\theta}{9.81}$$

$$\Rightarrow \theta = 12.92^\circ \qquad \Rightarrow (90 - \theta) = 77.08^\circ$$

Let t_1 be the time taken for earlier fragment to reach the man.

$$t_1 = \frac{2u \sin \theta}{g}$$

$$t_1 = \frac{2 \times 30 \times \sin 12.92^\circ}{9.81}$$

$$t_1 = 1.37 \text{ sec}$$

Let t_2 be the time taken for last fragment to reach the man.

$$t_2 = \frac{2u \sin (90 - \theta)}{g}$$

$$t_2 = \frac{2 \times 30 \times \sin 77.08^\circ}{9.81}$$

$$t_2 = 5.96 \text{ m}$$

Time for which man is in danger $T = t_2 - t_1$

$$T = 5.96 - 1.37$$

$$\therefore T = 4.59 \text{ sec.}$$

Problem 27

A ball is thrown upward from a high cliff with a velocity of 100 m/s at an angle of elevation of 30° with the horizontal as shown in Fig. 11.27(a). The ball strikes the inclined ground at right angle. If the inclination of ground is 30° as shown, determine **(i)** the velocity with which it strikes the ground, **(ii)** the time after which the ball strikes the ground, and **(iii)** coordinates (x, y) of a point of the strike w.r.t. point of projection.

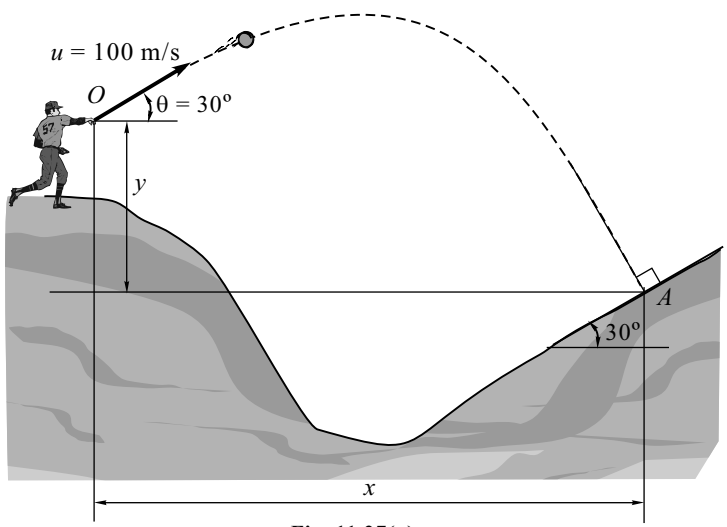

Fig. 11.27(a)

Solution

(i) We know in projectile motion, horizontal component of velocity remain constant.

$$v \cos 60^\circ = u \cos \theta$$

$$v \cos 60^\circ = 100 \cos 30^\circ$$

$$\therefore v = 173.21 \text{ m/s}$$

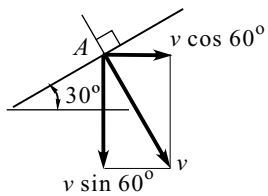

Fig. 11.27(b)

(ii) Time of flight (t)

Consider vertical motion under gravity.

$$v = u + gt$$

$$-v \sin 60^o = 100 \sin 30^o - 9.81 \times t$$

$$\frac{-173.21 \sin 60^o - 100 \sin 30^o}{9.81} = -t$$

$$\therefore \; t = 20.39 \text{ sec}$$

(iii) Coordinates (x, y) consider horizontal motion with constant velocity.

$$s = v \times t$$

$$x = 100 \cos 30^o \times 20.39$$

$$x = 1765.83 \text{ m}$$

Consider vertical motion under gravity,

$$h = ut + \frac{1}{2} gt^2$$

$$-y = 100 \sin 30^o \times 20.39 - \frac{1}{2} \times 9.81 \times (20.39)^2$$

$$\therefore \; y = 1019.76 \text{ m}$$

Problem 28

Two guns are pointed at each other one upwards at an angle of elevation of 30º and the other at the same angle of depression and being 30 metres apart as shown in Fig. 11.28. If the bullets leave the guns with velocity of 350 m/s and 300 m/s respectively. Find when and where they will meet.

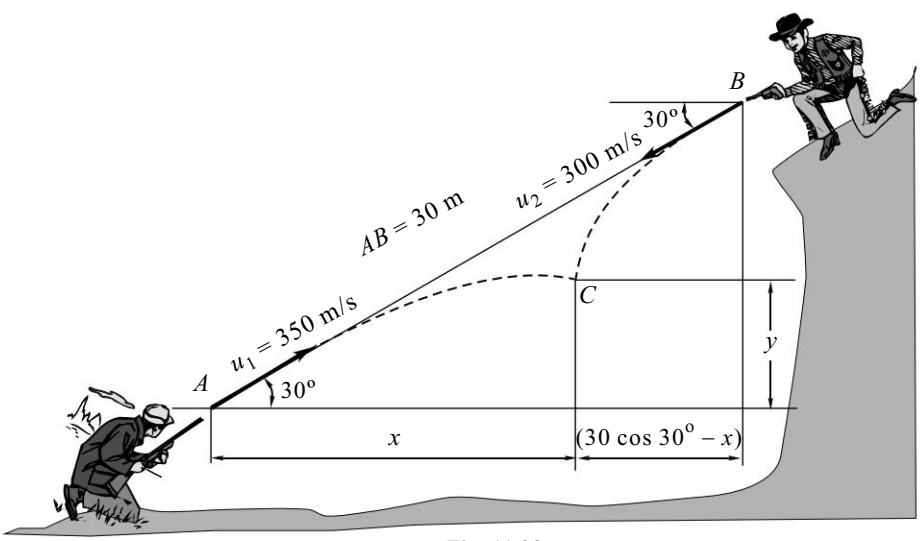

Fig. 11.28

Solution

Let 't' be the time taken to meet at C.

Consider horizontal motion with constant velocity,

$$s = v \times t$$

$$x = 350 \cos 30^o \times t \quad \text{..... (I)}$$

$$s = v \times t$$

$$30 \cos 30^o - x = 300 \cos 30^o \times t$$

$$x = -300 \cos 30^o \times t + 30 \cos 30^o \quad \text{..... (II)}$$

Equating Eqs. (I) and (II), we get

$350 \cos \times t = -300 \cos 30^o \times t + 30 \cos 30^o$

$t\,(350 \cos 30^o + 300 \cos 30^o) = 30 \cos 30^o$

$\therefore\ t = 0.04615$ s

From Eq. (I),

$x = 350 \cos 30^o \times 0.04615$

$x = 13.99$ m

Consider vertical motion under gravity of bullet A.

$$h = ut + \frac{1}{2} gt^2$$

$$y = 350 \sin 30^o \times 0.04615 - \frac{1}{2} \times 9.81 \times (0.04615)^2$$

$\therefore\ y = 8.07$ m

Problem 29

A ball is projected from point A with a velocity $u = 10$ m/s which is perpendicular to the incline as shown in Fig. 11.29(a). Determine the range R when $\theta = 30^o$ solve from fundamentals.

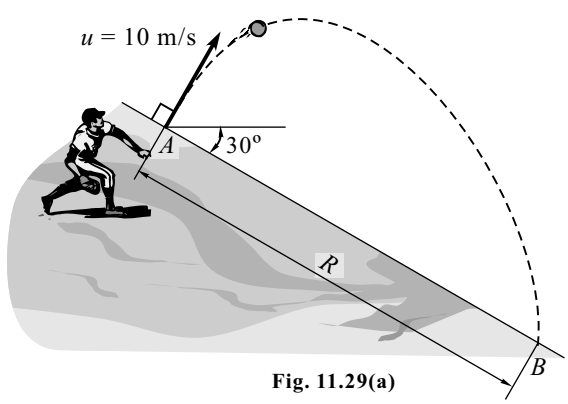

Fig. 11.29(a)

Solution

Let 't' be the time of flight from A to B.

Horizontal motion with constant velocity

$s = v \times t$

$R \cos 30^o = 10 \cos 60^o \times t$

$$\therefore\ t = \frac{R \cos 30^o}{10 \cos 60^o} = R(0.1732)$$

Vertical motion under gravity

$$h = ut + \frac{1}{2} gt^2$$

$$-R \sin 30^o = 10 \sin 60^o \times R\,(0.173^2) - \frac{1}{2} \times 9.81\, R^2\,(0.1732)^2$$

$-R\,0.5 = 1.5R - 0.147R^2$

$-2R = -0.147R^2$

$$\therefore R = \frac{2}{0.1471} = 13.6 \text{ m}$$

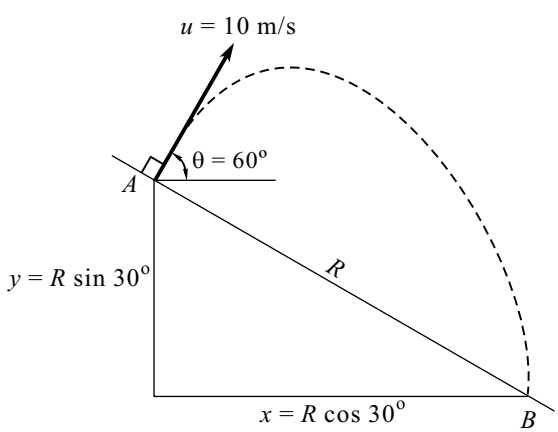

Fig. 11.29(b)

Problem 30

An object is projected with u = 10 m/s and $\theta = 30^o$ from point A as shown in Fig. 11.30. Find the velocity with which it lands at B. Assume the ground has the shape of parabola as shown.

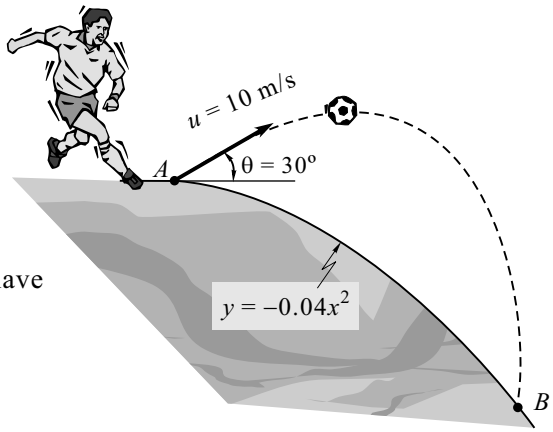

Fig. 11.30

Solution

By general equation of projectile motion, we have

$$y = x \tan\theta - \frac{gx^2}{2u^2}(1 + \tan^2\theta)$$

$$y = x \tan 30^o - \frac{9.81\, x^2}{2 \times 10^2}(1 + \tan^2 30^o)$$

$$y = 0.577\, x - 0.065\, x^2 \qquad \text{..... (I)}$$

Equation of parabolic ground surface is given as

$$y = -0.04\, x^2 \qquad \text{..... (II)}$$

Eq. (I) = Eq. (II)

$$0.577\, x - 0.065x^2 = -0.04\, x^2$$

$$0.577\, x = 0.025\, x^2$$

$$\therefore\ x = \frac{0.577}{0.025} = 23.08 \text{ m}$$

From Eq. (II),

$$y = -0.04\,(23.08)^2 = -21.31 \text{ m}$$

$\therefore$ Coordinate of $B(x, y)$ = (23.08, –21.31) m.

Horizontal component of velocity in projectile motion is always constant.

$$v_{Bx} = u \cos\theta$$

$$v_{Bx} = 10 \cos 30^o = 8.66 \text{ m/s } (\rightarrow)$$

Consider vertical motion under gravity

$$v^2 = u^2 + 2gh$$

$$v^2_{By} = (u \sin\theta)^2 + 2\,(-9.81) \times (-y)$$

$$v^2_{By} = (10 \sin 30^o)^2 + 2 \times (-9.81) \times (-21.31)$$

$$v_{By} = -21.05 = 21.05 \text{ m/s } (\downarrow)$$

$$v_B = \sqrt{(v_{Bx})^2 + (v_{By})^2} = \sqrt{(8.66)^2 + (21.05)^2}$$

$$\therefore\ v_B = 22.76 \text{ m/s}$$

$$\therefore\ \theta = \tan^{-1}\left(\frac{21.05}{8.66}\right) = 67.64^o \quad \left(B \nwarrow \theta \searrow v_B\right)$$

Problem 31

A ball rebounds at A and strikes the incline plane at point B at a distance 76 m as shown in Fig. 11.31(a). If the ball rises to a maximum height h = 19 m above the point of projection, compute the initial velocity and the angle of projection α.

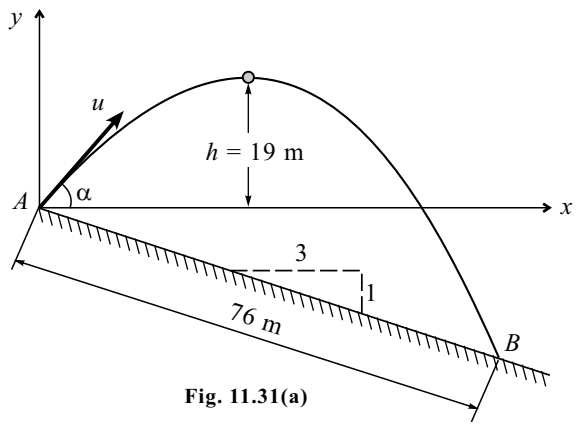

Fig. 11.31(a)

Solution

We know,

$$H_{max} = \frac{u^2 \sin^2 \alpha}{2g}$$

$$19 = \frac{u^2 \sin^2 \alpha}{2 \times 9.81}$$

$$u \sin \alpha = 19.31 \qquad \text{..... (I)}$$

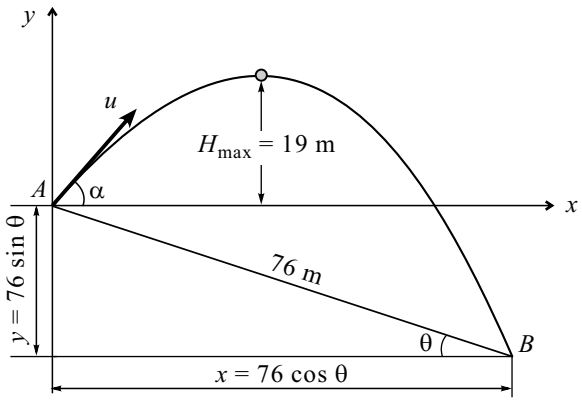

Fig. 11.31(b)

Consider vertical motion from A to B (under gravity)

$$h = ut + \frac{1}{2} gt^2$$

and from Eq. (I), we have

$$-76 \sin 18.44^o = u \sin \alpha t - \frac{1}{2} \times 9.81 \times t^2$$

$$-24.04 = 19.31 \times t - 4.905\, t^2$$

$$4.905\, t^2 - 19.31 \times t - 24.04 = 0$$

Solving quadratic equation, we get

$$t = 4.93 \text{ s}$$

Consider horizontal motion with constant velocity, we have

Displacement = Velocity × Time

$$x = u \cos \alpha \times t$$

$$76 \cos 18.44^o = u \cos \alpha \times 4.93$$

$$u \cos \alpha t = 14.62 \qquad \text{..... (II)}$$

Dividing Eq. (I) by Eq. (II), we get

$$\tan \alpha = \frac{19.31}{14.62}$$

$$\therefore \alpha = 52.87^o$$

$$\therefore u = 24.22 \ (\angle \alpha)$$

Problem 32

A ball is thrown, by a player with an initial velocity of 15 m/s, from a point 1.5 m above the ground. If the ceiling is 6 m high, determine the highest point on the wall at which the balls strikes the wall, 18 m away.

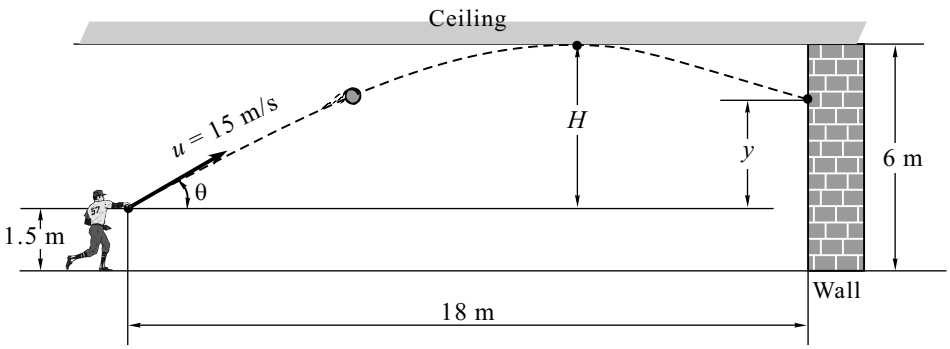

Fig. 11.32(a)

Solution

From Fig. 11.32(a), $H = 4.5$ m is the maximum height of projectile motion.

$$H = \frac{u^2 \sin^2 \theta}{2g}$$

$$\Rightarrow 4.5 = \frac{15^2 \sin^2 \theta}{2 \times 9.81}$$

$$\therefore \theta = 38.78^\circ$$

By general equation of projectile motion, we have

$$y = x \tan \theta - \frac{gx^2}{2u^2} (1 + \tan^2 \theta)$$

$$y = 18 \tan 38.78^\circ - \frac{9.81 \times 18^2}{2 \times 15^2} [1 + \tan^2 (38.78)^\circ]$$

$$y = 2.84 \text{ m}$$

$\therefore$ Maximum height on wall at which the ball strikes $= 2.84 + 1.5 = 4.34$ m

Note :
- Generally if height is the obstruction (e.g., ceiling) then it is preferable to assume height of obstruction as maximum height of projectile.
- As to why other possibilities are NOT valid in this problem, refer to the given three figures.

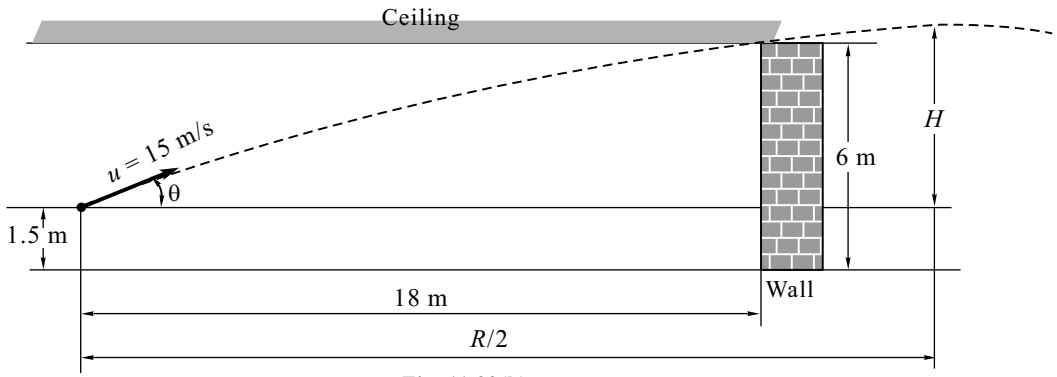

Fig. 11.32(b)

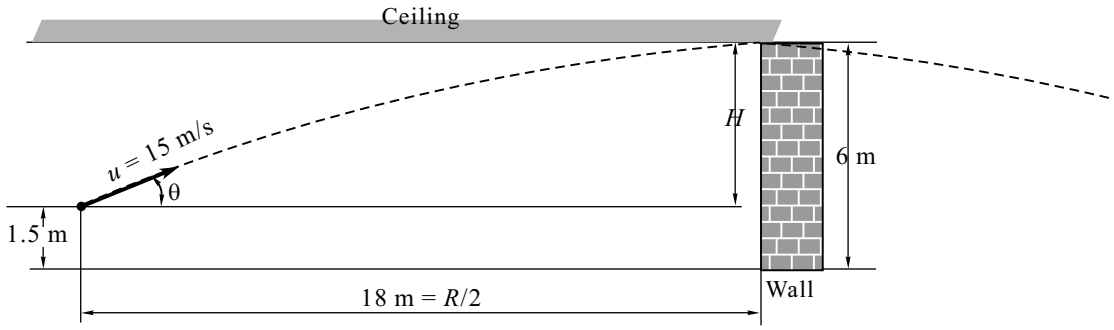

Fig. 11.32(c)

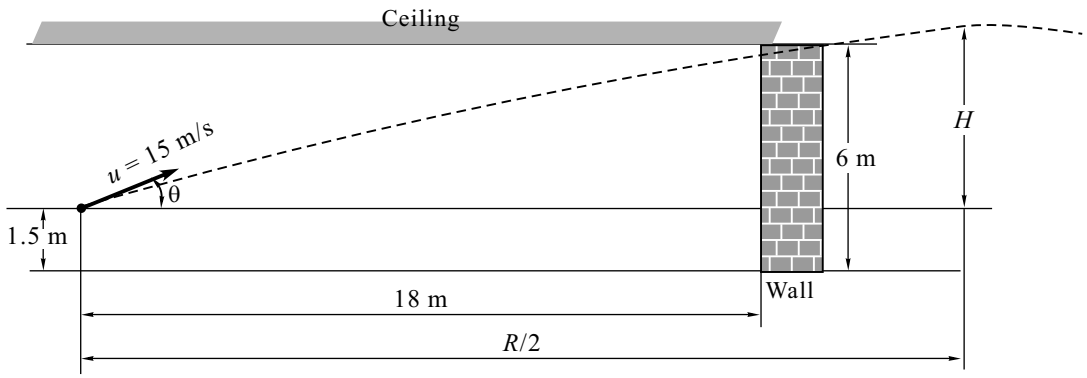

Fig. 11.32(d)

From Figs. 11.32(b), (c) and (d), we have half of R angle $R/2 \geq 18$ m.

We know $R_{max} = \dfrac{u^2}{g}$

$$\Rightarrow \frac{R_{max}}{2} = \frac{15^2}{2 \times 9.81}$$

$$\therefore \frac{R_{max}}{2} = 11.47 \text{ m}$$

This shows that the above possibilities are NOT valid.

Problem 33

A boy throws a ball with an initial velocity of 24 m/s as shown in Fig. 11.33. Knowing that the boy throws the ball from a distance of 30 m from the building, determine **(i)** the maximum height h that can be reached by the ball, and **(ii)** the corresponding angle α.

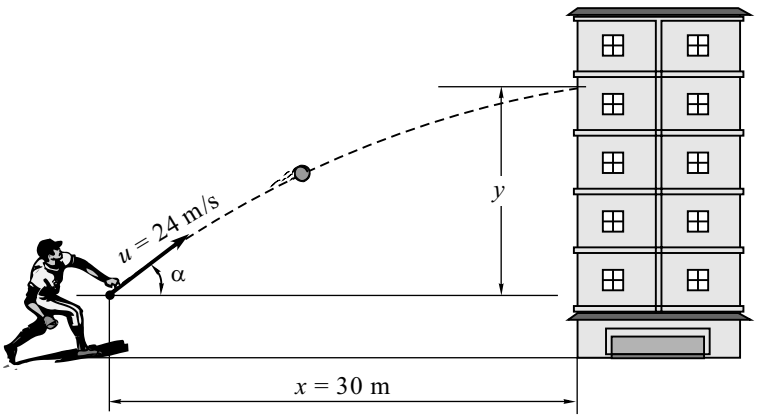

Fig. 11.33

Solution

By general equation of projectile motion, we have

$$y = x \tan\theta - \frac{gx^2}{2u^2}(1 + \tan^2\theta)$$

$$y = 30 \tan\alpha - \frac{9.81 \times 30^2}{2 \times 24^2}(1 + \tan^2\alpha)$$

$$y = 30 \tan\alpha - 7.66\,(1 + \tan^2\alpha) \qquad \text{..... (I)}$$

For height to be maximum (y_{max}), apply maxima condition,

i.e., $\dfrac{dy}{dx} = 0$

$$30 \sec^2\alpha - 7.66\,(0 + 2\tan\alpha \sec^2\alpha) = 0$$

$$\sec^2\alpha\,(30 - 15.32 \tan\alpha) = 0$$

$$\sec^2\alpha = 0$$

$$\tan\alpha = \frac{30}{15.32} \qquad \therefore\ \alpha = 62.95^\circ$$

From Eq. (I),

$$y_{max} = 30 \tan 62.95^\circ - 7.66\,[1 + \tan^2(61.95)^\circ]$$

$$\therefore\ y_{max} = h = 21.71 \text{ m}$$

The maximum height h that can be reached by the ball is 21.71 m and angle $\alpha = 62.95^\circ$.

Problem 34

A projectile P is fired at a muzzle velocity of 200 m/s at an angle of elevation of 60° as shown in Fig. 11.34. After some time a missile M is fired at 2000 m/s muzzle velocity and at an angle of elevation of 45° from the same point to destroy the projectile P. Find the **(i)** height, **(ii)** horizontal distance, and **(iii)** time with respect to P at which the destruction takes place.

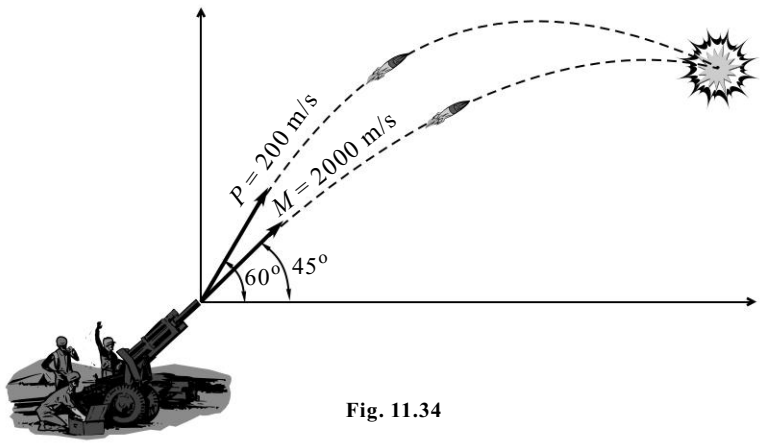

Fig. 11.34

Solution

At the time of destruction, coordinates x and y of both the projectiles will be same.

By general equation of projectile motion, we have

$$y = x \tan\theta - \frac{gx^2}{2u^2}(1 + \tan^2\theta)$$

Projectile P

$$y = x \tan 60^\circ - \frac{9.81 \times x^2}{2 \times 200^2}[1 + \tan^2(60)^\circ]$$

Projectile M

$$y = x \tan 45^\circ - \frac{9.81x^2}{2 \times 2000^2}[1 + \tan^2(45)^\circ]$$

Equating both, we get

$$x(\tan 60^\circ - \tan 45^\circ) = \frac{9.81x^2}{2}\left[\frac{1 + \tan^2(60)^\circ}{200^2} - \frac{1 + \tan^2(45)^\circ}{2000^2}\right]$$

$$0.7321x = 4.905x^2(1 \times 10^{-4} - 5 \times 10^{-7})$$

$$\Rightarrow x = \frac{0.7321}{4.905 \times 9.95 \times 10^{-5}}$$

$\therefore\ x = 1500$ m (horizontal distance)

$$y = x \tan 60^\circ - \frac{9.81x^2}{2 \times 200^2}[1 + \tan^2(60)^\circ] \quad \text{Put } x = 1500 \text{ m}$$

$\therefore\ y = 1495$ m (vertical height)

For time, we have

$$x = u \cos\theta \times t$$

$$\therefore\ t = \frac{1500}{200 \cos 60^\circ} = 15 \text{ s with respect to projectile } P.$$

11.3 Relative Motion

Generally, a moving body is observed by a person who is at rest. Considering the observer's position at rest, we are developing fixed axis reference. Such a set of fixed axes is defined as *absolute* or *Newtonian* or *inertial frame of reference*. For most of the moving bodies, the Earth is regarded as fixed although Earth itself is moving in space. Motion referred with such fixed axis is called an *absolute motion*, which we have already dealt in previous discussion.

However, if the axes reference is attached to a moving object then such motion is termed as *relative motion*. It means person in moving object is observing another object which is also in motion.

Example 1

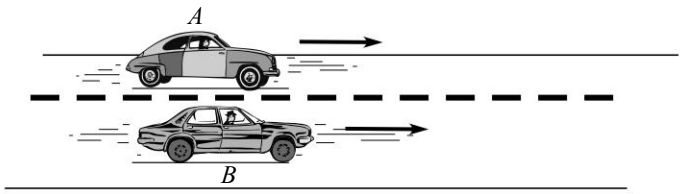

Fig. 11.5-i

Cars A and B are moving in the same direction on road parallel to each other. Car A is moving with a speed of 60 km/hr and car B is moving with 80 km/h (These are the absolute speeds of the cars). Car A in relation to car B is moving backward with speed 20 km/h whereas car B in relation to car A is moving forward with speed of 20 km/h. Observation of drivers of car A and car B w.r.t. each is developing relative motion between them.

Example 2

If a pilot of fighter plane wants to target another moving plane then relative motion analysis is must.

11.3.1 Relative Motion Between Two Particles

Consider two particles A and B moving on different path as shown in Fig. 11.3.1-i. Here xOy is the fixed frame of reference. Therefore, absolute position of A is given by $r_A = OA$ and of B is $r_B = OB$. Therefore, relative position of B w.r.t. A is written as $r_{B/A}$.

By triangle law of vector addition, we have

$$r_A + r_{B/A} = r_B$$

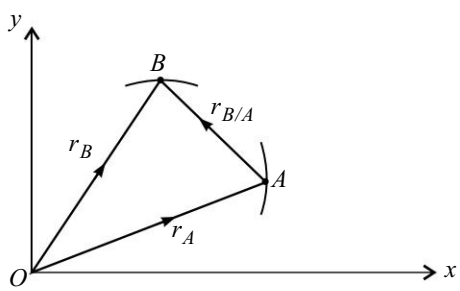

Fig. 11.3.1-i

$\therefore$ Relative position of B w.r.t. A $\quad r_{B/A} = r_B - r_A$ ..... (I)

Differentiating Eq. (I) w.r.t. t, we have

Relative velocity of B w.r.t. A $\quad v_{B/A} = v_B - v_A$ ..... (II)

Further differentiating Eq. (II) w.r.t. t, we have

Relative acceleration of B w.r.t. A $\quad a_{B/A} = a_B - a_A$ ..... (III)

Solved Problems Based on Relative Motion

Problem 35

Two cars A and B start from rest from point O at the same instant and travel towards right along a straight road as shown in Fig. 11.35(a). Car A moves with an acceleration of 4 m/s^2 and car B moves with an acceleration of 6 m/s^2. Find relative position, velocity and acceleration of car B w.r.t. car A 5 sec from the start.

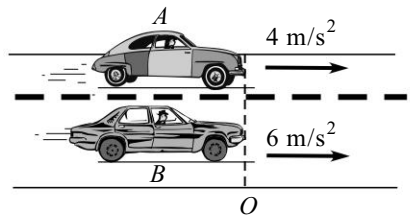

Fig. 11.35(a)

Solution

Car *A*

$u_A = 0$

$a_A = 4 \text{ m/s}^2$

$t = 5 \text{ s}$

$v_A = u_A + a_A t$

$v_A = 0 + 4 \times 5$

$v_A = 20 \text{ m/s}$

$s_A = u_A t + \frac{1}{2} a_A t^2$

$s_A = 0 + \frac{1}{2} \times 4 \times 5^2$

$s_A = 50 \text{ m}$

Car *B*

$u_B = 0$

$a_B = 6 \text{ m/s}^2$

$t = 5 \text{ s}$

$v_B = u_B + a_B t$

$v_B = 0 + 6 \times 5$

$v_B = 30 \text{ m/s}$

$s_B = u_B t + \frac{1}{2} a_B t^2$

$s_B = 0 + \frac{1}{2} \times 6 \times 5^2$

$s_B = 75 \text{ m}$

Relative position of car *B* w.r.t. car *A*

$\boldsymbol{s}_{B/A} = \boldsymbol{s}_B - \boldsymbol{s}_A$

$\boldsymbol{s}_{B/A} = 75\,\boldsymbol{i} - 50\,\boldsymbol{i}$

$\boldsymbol{s}_{B/A} = 25\,\boldsymbol{i} \text{ m}$

$s_{B/A} = s_B - s_A$

$s_{B/A} = 75 - 50$

$s_{B/A} = 25 \text{ m } (\rightarrow)$

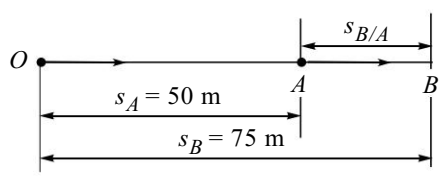

Relative Position of Car *B* w.r.t. Car *A*

Relative velocity of car *B* w.r.t. car *A*

$\boldsymbol{v}_{B/A} = \boldsymbol{v}_B - \boldsymbol{v}_A$

$\boldsymbol{v}_{B/A} = 30\,\boldsymbol{i} - 20\,\boldsymbol{i}$

$\boldsymbol{v}_{B/A} = 10\,\boldsymbol{i} \text{ m/s}$

$v_{B/A} = v_B - v_A$

$v_{B/A} = 30 - 20$

$v_{B/A} = 10 \text{ m } (\rightarrow)$

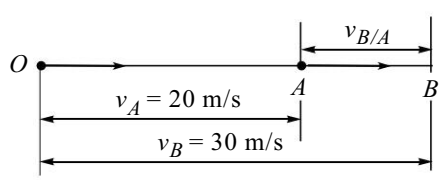

Relative Velocity of Car *B* w.r.t. Car *A*

Relative acceleration of car *B* w.r.t. car *A*

$\boldsymbol{a}_{B/A} = \boldsymbol{a}_B - \boldsymbol{a}_A$

$\boldsymbol{a}_{B/A} = 6\,\boldsymbol{i} - 4\,\boldsymbol{i}$

$\boldsymbol{a}_{B/A} = 2\boldsymbol{i} \text{ m/s}^2$

$a_{B/A} = a_B - a_A$

$a_{B/A} = 6 - 4$

$a_{B/A} = 2 \text{ m/s}^2 \ (\rightarrow)$

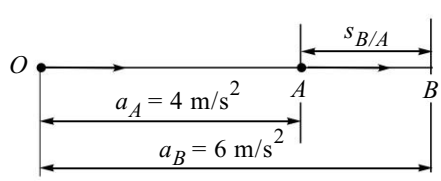

Relative Acceleration of Car *B* w.r.t. Car *A*

Fig. 11.35(b)

Problem 36

From point O in Fig. 11.36(a), a ship A travels in the North making an angle of 45° to the West with a velocity of 18 km/h and ship B travels in the East with a velocity of 9 km/h. Find the relative velocity of ship B w.r.t. ship A.

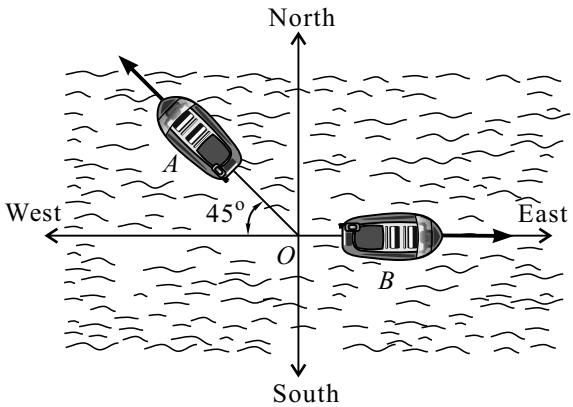

Fig. 11.36(a)

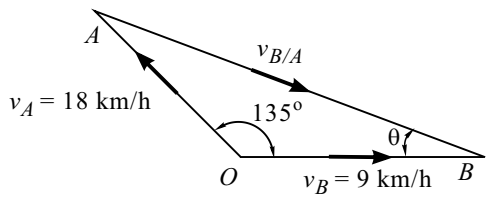

Fig. 11.36(b)

Solution

Consider the triangle law.

By cosine rule, we have

$$v_{B/A} = \sqrt{v_A^2 + v_B^2 - 2(v_A)(v_B)\cos 135^o}$$

$$v_{B/A} = \sqrt{18^2 + 9^2 - 2(18)(9)\cos 135^o}$$

$$v_{B/A} = 25.18 \text{ km/h}$$

By sine rule, we have

$$\frac{v_{B/A}}{\sin 135^o} = \frac{v_A}{\sin \theta}$$

$$\frac{25.18}{\sin 135^o} = \frac{18}{\sin \theta}$$

$$\therefore \theta = 30.36^o$$

Relative velocity of ship B w.r.t. ship A is $v_{B/A} = 25.18$ km/h $\left(\searrow 30.36^o\right)$

Problem 37

Figure 11.37(a) shows cars A and B at a distance of 35 m. Car A moves with a constant speed of 36 kmph and car B starts from rest with an acceleration of 1.5 m/s^2. Determine the relative **(i)** position, **(ii)** velocity and **(iii)** acceleration of car B w.r.t. car A 5 sec after car A crosses the intersection.

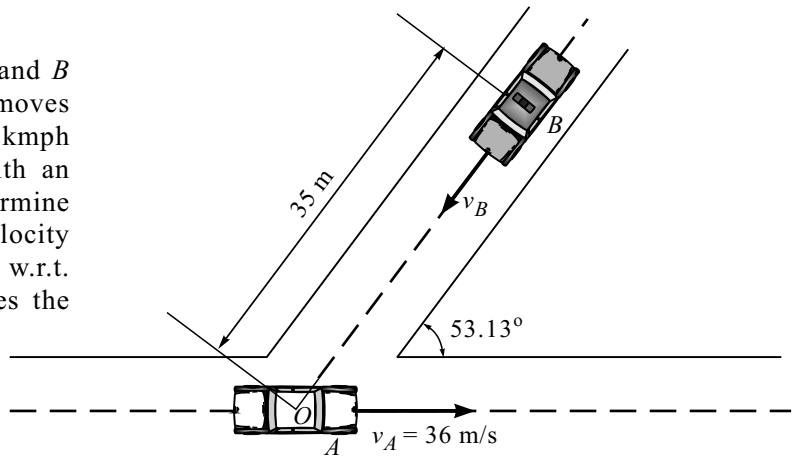

Fig. 11.37(a)

Solution

Car A (Uniform velocity)

$u_A = 10$ m/s, $t = 5$ s

$a_A = 0$

$s_A = u_A t$

$s_A = 10 \times 5$

$s_A = 50$ m

Car B (Uniform acceleration)

$u_B = 0$, $a_B = 1.5$ m/s^2, $t = 5$ s

Displacement of car B

$$s = u_B t + \frac{1}{2} a_B t^2$$

$$s = 0 + \frac{1}{2} \times 1.5 \times 5^2 = 18.75 \text{ m}$$

Initial distance from O is 35 m

Position of car B w.r.t. O after 5 s

$s_B = 35 - 18.75$

$s_B = 16.25$ m

$v_B = u_B + a_B t = 0 + 1.5 \times 5$

$v_B = 7.5$ m/s

(i) Relative position of car B w.r.t. car A

Consider the triangle law.

By cosine rule, we have

$$s_{B/A} = \sqrt{s_A^2 + s_B^2 - 2(s_A)(s_B)\cos 53.13^\circ}$$

$$s_{B/A} = \sqrt{50^2 + 16.25^2 - 2(50)(16.25)\cos 53.13^\circ}$$

$s_{B/A} = 42.3$ m

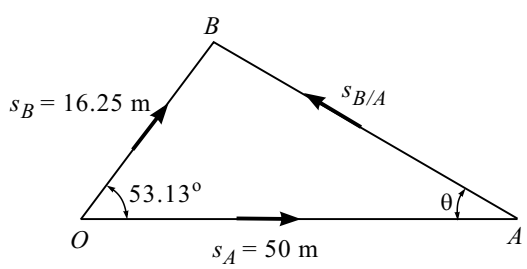

Fig. 11.106(b)

By sine rule, we have

$$\frac{s_A}{\sin\theta} = \frac{s_{B/A}}{\sin 53.13^\circ}$$

$$\frac{16.25}{\sin\theta} = \frac{42.3}{\sin 53.13^\circ} \qquad \therefore\ \theta = 17.9^\circ$$

$\therefore$ relative position of car B w.r.t. car A will be $s_{B/A} = 42.3$ m $\left(\underline{17.9^\circ}\nwarrow\right)$

(ii) Relative velocity of car *B* w.r.t. car *A*

Consider the triangle law.
By cosine rule, we have

$$v_{B/A} = \sqrt{v_A^2 + v_B^2 - 2(v_A)(v_B)\cos 126.87^\circ}$$

$$v_{B/A} = \sqrt{10^2 + 7.5^2 - 2(10)(7.5)\cos 126.87^\circ}$$

$$v_{B/A} = 15.69 \text{ m/s}$$

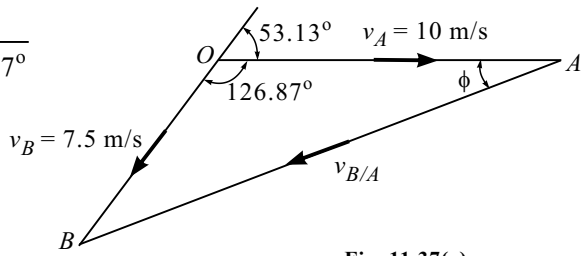

Fig. 11.37(c)

By sine rule, we have

$$\frac{v_{B/A}}{\sin 126.87^\circ} = \frac{v_B}{\sin \phi}$$

$$\frac{15.69}{\sin 126.87^\circ} = \frac{7.5}{\sin \phi} \qquad \therefore \ \phi = 22.48^\circ$$

$\therefore$ relative velocity of car *B* w.r.t. car *A* will be $v_{B/A} = 15.69$ m/s $\left(\overline{22.48^\circ}\right)$

(iii) Relative acceleration of car *B* w.r.t. car *A*

$$a_{B/A} = a_B - a_A = 1.5 - 0$$

$$a_{B/A} = 1.5 \text{ m/s}^2 \ \left(\overline{53.13^\circ}\right)$$

Alternate Method

(i) Relative position of car *B* w.r.t. car *A*

$$\boldsymbol{s_A} = 50\,\boldsymbol{i} \text{ and } \boldsymbol{s_B} = 16.25\cos 53.13^\circ\,\boldsymbol{i} + 16.25\sin 53.13^\circ\,\boldsymbol{j}$$

$$\boldsymbol{s_{B/A}} = \boldsymbol{s_B} - \boldsymbol{s_A}$$

$$\boldsymbol{s_{B/A}} = (16.25\cos 53.13^\circ\,\boldsymbol{i} + 16.25\sin 53.13^\circ\,\boldsymbol{j}) - 50\,\boldsymbol{i} = -40.25\,\boldsymbol{i} + 13\,\boldsymbol{j}$$

Magnitude

$$s_{B/A} = \sqrt{(40.25)^2 + (13)^2}$$

$$s_{B/A} = 42.3 \text{ m}$$

Direction

$$\tan\theta = \frac{13}{40.25}$$

$$\therefore \ \theta = 17.9^\circ$$

$$\therefore s_{B/A} = 42.3 \text{ m} \ \left(\underline{17.9^\circ}\right)$$

(ii) Relative velocity of car *B* w.r.t. car *A*

$$\boldsymbol{v_A} = 10\,\boldsymbol{i} \text{ and } \boldsymbol{v_B} = -7.5\cos 53.13^\circ\,\boldsymbol{i} - 7.5\sin 53.13^\circ\,\boldsymbol{j}$$

$$\boldsymbol{v_B} = -4.5\,\boldsymbol{i} - 6\,\boldsymbol{j}$$

$$\boldsymbol{v_{B/A}} = \boldsymbol{v_B} - \boldsymbol{v_A}$$

$$\boldsymbol{v_{B/A}} = (-4.5\,\boldsymbol{i} - 6\,\boldsymbol{j}) - (10\,\boldsymbol{i}) = -14.5\,\boldsymbol{i} - 6\,\boldsymbol{j}$$

Magnitude

$$v_{B/A} = \sqrt{(14.5)^2 + (6)^2}$$

$$v_{B/A} = 15.69 \text{ m/s}$$

Direction

$$\tan\phi = \frac{6}{14.5}$$

$$\therefore \ \phi = 22.48^\circ$$

$$\therefore v_{B/A} = 15.69 \text{ m/s} \ \left(\overline{22.48^\circ}\right)$$

Problem 38

A car A is travelling along a straight highway, while a truck B is moving along a circular curve of 150 m radius. The speed of car A is increased at the rate of 1.5 m/s^2 and the speed of truck B is being decreased at the rate of 0.9 m/s^2. For the position shown in Fig. 11.38(a), determine the velocity of A relative to B and the acceleration of A relative to B. At this instant the speed of A is 75 km/h and that of B is 40 km/h.

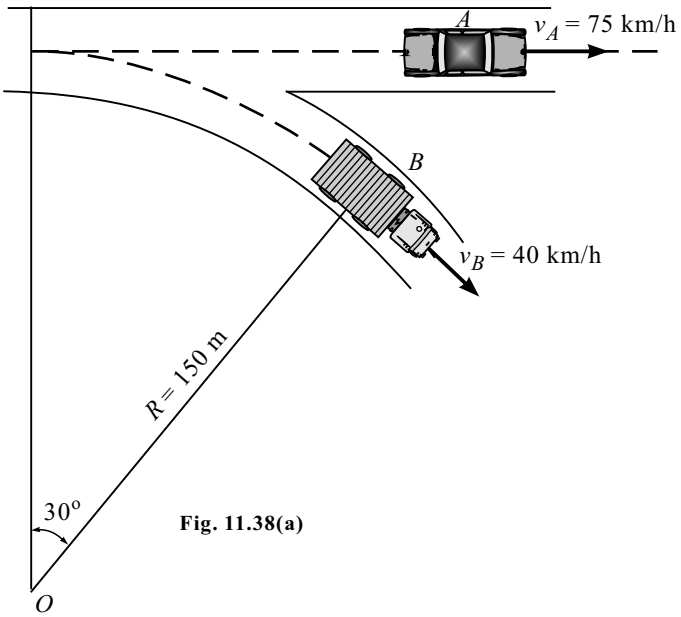

Fig. 11.38(a)

Solution

(i) Motion of car *A*

v_A = 75 km/h = 20.83 m/s

$\boldsymbol{v_A}$ = 20.83 $\boldsymbol{i}$

$\boldsymbol{a_A}$ = 1.5 $\boldsymbol{i}$

Motion of truck *B*

v_B = 40 km/hr = 11.11 m/s (30°)

$\boldsymbol{v_B}$ = 11.11 cos 30° $\boldsymbol{i}$ – 11.11 sin 30° $\boldsymbol{j}$

$\boldsymbol{v_B}$ = 9.622 $\boldsymbol{i}$ – 5.55 $\boldsymbol{j}$

Tangential component of acceleration,

a_t = 0.9 m/s^2 (30°)

Normal component of acceleration,

$$a_n = \frac{v^2}{\rho} = \frac{11.11^2}{150}$$

a_n = 0.823 m/s^2 (60°)

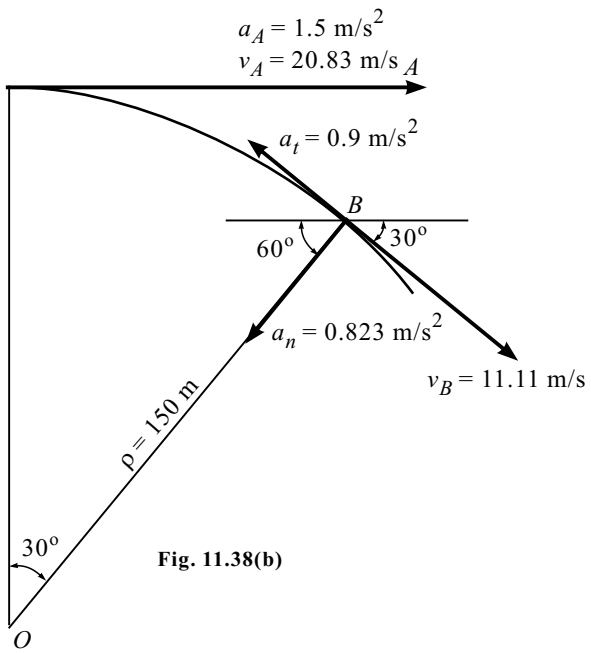

Fig. 11.38(b)

$\boldsymbol{a_B}$ = (–0.9 cos 30° – 0.823 cos 60°) $\boldsymbol{i}$ + (0.9 sin 30° – 0.823 sin 60°) $\boldsymbol{j}$

$\therefore$ $\boldsymbol{a_B}$ = –1.190 $\boldsymbol{i}$ – 0.267 $\boldsymbol{j}$

(ii) Relative velocity of *A* w.r.t. *B*

$\boldsymbol{v_{A/B}} = \boldsymbol{v_A} - \boldsymbol{v_B}$

$\boldsymbol{v_{A/B}}$ = 20.83 $\boldsymbol{i}$ – (9.622 $\boldsymbol{i}$ – 5.55 $\boldsymbol{j}$) = 11.21 $\boldsymbol{i}$ + 5.55 $\boldsymbol{j}$

Magnitude

$$v_{A/B} = \sqrt{(11.21)^2 + (5.55)^2}$$

$$v_{A/B} = 12.51 \text{ m/s}$$

$$\therefore v_{A/B} = 12.51 \text{ m/s } \left(\measuredangle 26.36^\circ\right)$$

Direction

$$\tan\theta = \frac{5.55}{11.21}$$

$$\therefore \theta = 26.36^\circ$$

(iii) Relative acceleration of *A* w.r.t. *B*

$$\boldsymbol{a}_{A/B} = \boldsymbol{a}_A - \boldsymbol{a}_B$$

$$\boldsymbol{a}_{A/B} = 1.5\,\boldsymbol{i} - (-1.190\,\boldsymbol{i} - 0.267\,\boldsymbol{j}) = 2.69\,\boldsymbol{i} + 0.2627\,\boldsymbol{j}$$

Magnitude

$$a_{A/B} = \sqrt{(2.69)^2 + (0.2627)^2}$$

$$a_{A/B} = 2.7 \text{ m/s}^2$$

$$\therefore a_{A/B} = 2.7 \text{ m/s}^2 \left(\measuredangle 5.58^\circ\right)$$

Direction

$$\tan\phi = \frac{0.2627}{2.69}$$

$$\therefore \phi = 5.58^\circ$$

Problem 39

A boy wants to swim across a river of 1 km width which is flowing at 10 km/h. The boy wants to reach the other side of bank *B* and so swims at 12 km/h at an angle θ as shown in Fig. 11.39(a). Determine **(i)** the angle θ at which the boy should swim to reach *B*, **(b)** the time taken to reach *B* and **(c)** if the boy is swimming straight at θ = 0 where would he have landed on the opposite bank and how much time is required.

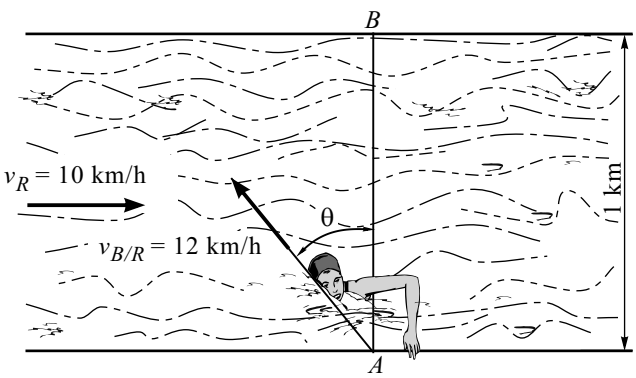

v_B = Velocity of boy
v_R = Velocity of river
$v_{B/R}$ = Relative velocity of boy w.r.t. river

Fig. 11.39(a)

Solution

Refer to Fig. 11.39(b).

(i) Angle θ at which the boy should swim to reach *B*

$$\sin\theta = \frac{10}{12}$$

$$\therefore \theta = 56.44^\circ$$

(ii) The time taken to reach *B*

By Pythagoras theorem, we have

$$v_B = \sqrt{12^2 - 10^2}$$

$$\therefore v_B = 6.633 \text{ km/h } (\uparrow)$$

Displacement = Velocity × Time

$$\text{Time} = \frac{1}{6.633} \times 3600$$

$$\therefore t = 542.74 \text{ s}$$

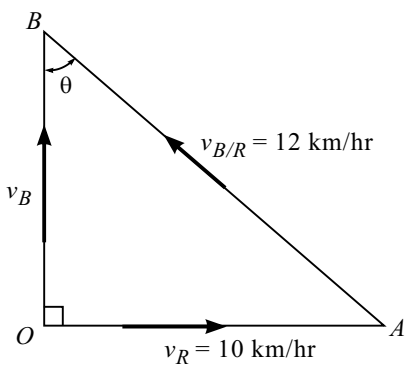

Fig. 11.39(b)

(iii) If the boy is swimming straight at $\theta = 0$. Refer to Fig. 11.39(c).

$$\tan\phi = \frac{12}{10} \quad \therefore \ \phi = 50.19^{\circ}$$

$$v_B = \sqrt{(10)^2 + (12)^2}$$

$$v_B = 15.62 \text{ km/h}$$

$$\text{Time} = \frac{1}{12} \times 3600$$

$$\therefore \ t = 300 \text{ s}$$

For distance

$$s_B = v_B \times t = 15.62 \times \frac{1000}{3600} \times 300$$

$$s_B = 1301.67 \text{ m}$$

$$d = \sqrt{(1301.67)^2 - (1000)^2}$$

$$\therefore \ d = 833.23 \text{ m}$$

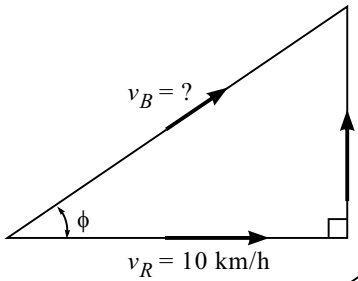

Fig. 11.108(c)

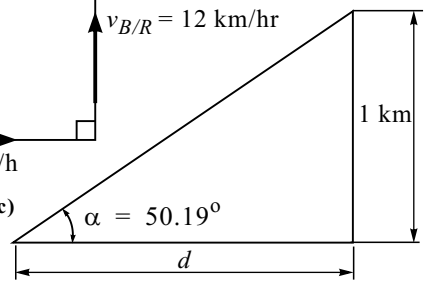

Fig. 11.108(d)

$$\sin\alpha = \frac{1000}{1301.67} \ \therefore \ \alpha = 50.19^{\circ}$$

Problem 40

A helicopter is moving horizontally at a height of 360 m above the ground. When the helicopter is at point O its speed is 100 m/s and it has an acceleration of 4 m/s^2. At the same instant a packet is released from the helicopter. Find the position, velocity and acceleration of the particle w.r.t. the helicopter after 3 s.

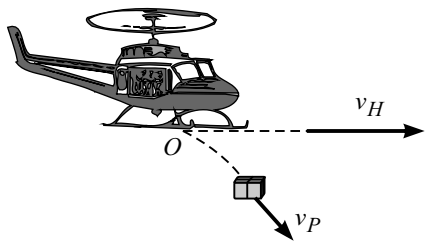

Fig. 11.40

Solution

Refer to Fig. 11.40.

Motion of helicopter

$u = 100$ m/s, $a = 4$ m/s^2, $t = 3$ s

Displacement

$$s = ut + \frac{1}{2}at^2$$

$$s = 100 \times 3 + \frac{1}{2} \times 4 \times 3^2$$

$$\therefore \ s = 318 \text{ m } (\rightarrow)$$

Velocity

$$v = u + at$$

$$v = 100 + 4 \times 3$$

$$\therefore \ v = 112 \text{ m/s } (\rightarrow)$$

$$\boldsymbol{r_H} = 318\,\boldsymbol{i}\,,$$

$$\boldsymbol{v_H} = 112\,\boldsymbol{i} \text{ and}$$

$$\boldsymbol{a_H} = 4\,\boldsymbol{i}$$

Motion of packet

Freely falling packet will perform projectile motion. Consider horizontal motion with constant velocity.

$$s_x = v_x \times t$$

$$s_x = 100 \times 3 = 300 \text{ m}$$

$$v_x = 100 \text{ m/s}$$

$$a_x = 0$$

Vertical motion under gravity.

$$s_y = u_y t + \frac{1}{2}gt^2$$

$$s_y = 0 + \frac{1}{2} \times 9.81 \times 3^2 = 44.145 \text{ m } (\downarrow)$$

Velocity

$$v_y = u_y + gt$$

$$v_y = 0 + 9.81 \times 3 = 29.43 \text{ m/s } (\downarrow)$$

Acceleration due to gravity in vertical direction

$$a_y = 9.81 \text{ m/s}^2 \ (\downarrow)$$

Motion of packet

$\boldsymbol{r_P} = 300\,\boldsymbol{i} + (-44.145)\,\boldsymbol{j}$

$\boldsymbol{v_P} = 100\,\boldsymbol{i} + (-29.43)\,\boldsymbol{j}$

$\therefore\ \boldsymbol{a_P} = 0\,\boldsymbol{i} + (-9.81)\,\boldsymbol{j}$ and

Relative position after 3 s

$\boldsymbol{r_{P/H}} = \boldsymbol{r_P} - \boldsymbol{r_H}$

$\boldsymbol{r_{P/H}} = (300\,\boldsymbol{i} - 44.145\,\boldsymbol{j}) - (318\,\boldsymbol{i})$

$\boldsymbol{r_{P/H}} = -18\,\boldsymbol{i} - 44.145\,\boldsymbol{j}$

Relative velocity and acceleration after 3 s

$\boldsymbol{v_{P/H}} = \boldsymbol{v_P} - \boldsymbol{v_H}$

$\boldsymbol{v_{P/H}} = (100\,\boldsymbol{i} - 29.43\,\boldsymbol{j}) - (112\,\boldsymbol{i})$

$\therefore\ \boldsymbol{v_{P/H}} = -12\,\boldsymbol{i} - 29.43\,\boldsymbol{j}$ and

$\boldsymbol{a_{P/H}} = \boldsymbol{a_P} - \boldsymbol{a_H}$

$\boldsymbol{a_{P/H}} = -9.81\,\boldsymbol{j} - 4\,\boldsymbol{i}$

$\boldsymbol{a_{P/H}} = -4\,\boldsymbol{i} - 9.81\,\boldsymbol{j}$

Problem 41

When a cyclist is riding at 12 km/h, he finds the rain meeting him at an angle of 45° with the vertical. When he rides at 8 km/h, he finds the rain meeting him at an angle of 30° with the vertical. What is the actual magnitude and direction of the rain?

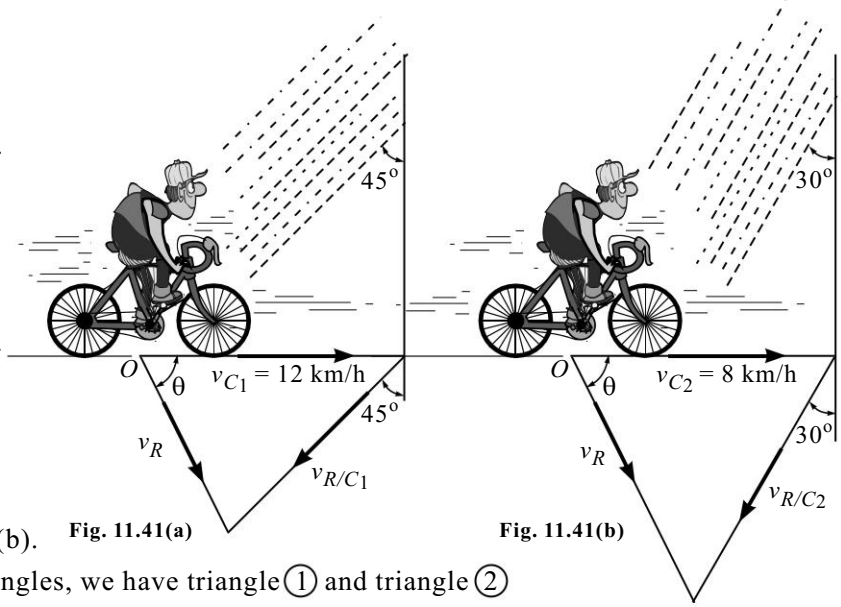

Fig. 11.41(a) Fig. 11.41(b)

Solution

Refer to Figs. 11.41(a) and (b).

Superimposing both the triangles, we have triangle ① and triangle ②

Consider triangle ①

By sine rule, we have

$$\frac{v_{R/C_2}}{\sin 45^\circ} = \frac{4}{\sin 15^\circ}$$

$\therefore\ v_{R/C_2} = 10.93$ km/h

Consider triangle ②

By cosine rule, we have

$$v_R = \sqrt{8^2 + 10.93^2 - 2 \times 8 \times 10.93 \cos 60^\circ}$$

$v_R = 9.799$ m/s

By sine rule, we have

$$\frac{\sin\theta}{10.93} = \frac{\sin 60^\circ}{9.799} \quad \therefore\ \theta = 75^\circ$$

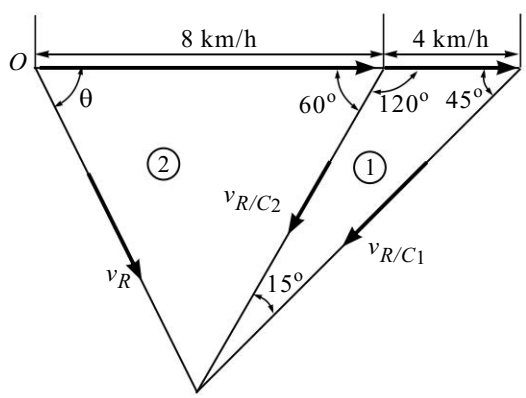

Fig. 11.41(c)

$\therefore$ Absolute velocity of rain, $v_R = 9.799$ km/h $\left(\nabla 75^\circ\right)$

SUMMARY

- **Curvilinear Motion :** If a particle is moving along a curved path then it is said to perform curvilinear motion.
- In a **rectilinear motion**, displacement, velocity and acceleration are always directed along the path of a particle.
- In a **curvilinear motion**, displacement, velocity and acceleration changes its direction regularly. Therefore, the analysis of curvilinear motion is done by considering different component systems.
- **Rectangular Component System**

Vector Form	$\bar{r} = x\bar{i} + y\bar{j}$	$\bar{v} = v_x i + v_y j$	$a = a_x \bar{i} + a_y \bar{j}$
Magnitude	$r = \sqrt{x^2 + y^2}$	$v = \sqrt{v_x^2 + v_y^2}$	$a = \sqrt{a_x^2 + a_y^2}$
Direction	$\tan\theta_r = \dfrac{y}{x}$	$\tan\theta_v = \dfrac{v_y}{v_x}$	$\tan\theta_a = \dfrac{a_y}{a_x}$

Radius of curvature $\rho = \left| \dfrac{(v_x^2 + v_y^2)^{3/2}}{v_x a_y - v_y a_x} \right|$

- **Tangent and Normal Component System :** The component of tangential acceleration (a_t) is equal to the rate of change of speed.

$$a_t = \frac{dv}{dt}$$

The component of normal acceleration (a_n) is centripetal acceleration.

$$a_n = \frac{v^2}{\rho}$$

Net acceleration $a = \sqrt{a_t^2 + a_n^2}$

For uniform speed, $a_t = 0$ (uniform circular motion).

If speed changes uniformly then a_t is constant and we can use the following equations of motion.

$$v = u + a_t t \quad ; \quad s = ut + \frac{1}{2} a_t t^2 \quad ; \quad v^2 = u^2 + 2a_t s$$

where s is the distance covered along curved path.
u is initial speed and v is final speed
a_t is the component of acceleration along tangential direction.

Radius of curvature $\rho = \left| \dfrac{\left[1 + \left(\dfrac{dy}{dt}\right)^2\right]^{3/2}}{\dfrac{d^2y}{dt^2}} \right|$

$$\text{Slope} = \tan\theta = \frac{dy}{dx}$$

Component of tangential acceleration $a_t = \bar{a} \cdot \bar{e}_t$ (Dot product)

- **Projectile Motion :** If any object is thrown obliquely in air it follows a parabolic path and such a motion is called projectile motion.

  Projectile motion is the combination of horizontal motion with constant velocity and vertical motion under gravity, happening simultaneously.

  General equation of projectile motion is

$$y = x\tan\theta - \frac{gx^2}{2u^2}(1 + \tan^2\theta)$$

  Time of flight (T) and range (R) when the point of projection and point of target lies at same horizontal level is given as

$$T = \frac{2u\sin\theta}{g}, \quad R = \frac{2u^2\sin 2\theta}{g} \quad \text{and} \quad R_{max} = \frac{u^2}{g}$$

  Maximum height of projectile from a point of projection is given as

$$H_{max} = \frac{u^2\sin^2\theta}{2g}$$

EXERCISES

[I] Problems

Based on Curvilinear Motion

1. The curvilinear motion of a particle is given by $v_x = 50 - 16t$ m/s and $y = 100 - 4t^2$ m. Determine the velocity and acceleration when the position $y = 0$ is reached.

[***Ans.*** $\boldsymbol{v} = -30\boldsymbol{i} - 40\boldsymbol{j}$ m/s and $\boldsymbol{a} = -16\boldsymbol{i} - 8\boldsymbol{j}$ m/s^2]

2. In the curvilinear motion, particle P moves along the fixed path $9y = x^2$ where x and y are expressed in centimetres. At any instant t, the x-coordinate of P is given by $x = t^2 - 14t$. Determine the y-component of the velocity and acceleration of P when $t = 15$ s.

[***Ans.*** $v = 53.33$ cm/s and $a = 63.56$ cm/s^2]

3. For the curvilinear motion $y = 4t^3 - 3t$ m and $ax = 12\ t$ m/s^2. If $v_x = 4$ m/s, when $t = 0$. Calculate magnitude of velocity and acceleration for $t = 1$ s.

[***Ans.*** $v = 13.45$ m/s and $a = 26.83$ m/s^2]

4. At any instant the horizontal position of the weather balloon in Fig. 11.E4 is designed by $x = (9t)$ m where t is given in seconds. If the equation of the path is $y = x^2/30$, determine **(a)** the distance of the balloon from the station at A when $t = 2$ s, **(b)** the magnitude and direction of the velocity when $t = 2$ s and **(c)** the magnitude and direction of the acceleration when $t = 2$ s.

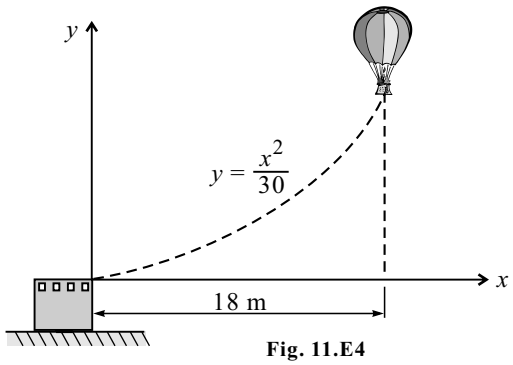

Fig. 11.E4

[***Ans.*** **(a)** 21 m **(b)** 14.1 m/s $\measuredangle 50.2^\circ$ **(c)** 5.4 m/s^2]

5. A particle moves in a circular path of 0.3 m radius. Calculate acceleration if **(a)** speed is constant at 0.6 m/s, and **(b)** speed is 0.6 m/s but increasing at the rate of 0.9 m/s^2 each second.

[***Ans.*** **(a)** 1.2 m/s^2 and **(b)** 1.5 m/s^2]

6. A car is travelling along a circular curve that has a radius of 50 m. If its speed is 16 m/s and is increasing uniformly at 8 m/s^2, determine the magnitude of its acceleration at this instant.

[***Ans.*** 9.498 m/s^2]

7. At a given instant, the jet plane has a speed of 120 m/s and acceleration of 21 m/s^2 acting in the direction shown in Fig. 11.E7. Determine the rate of increase in the plane's speed and the radius of curvature of the path.

[***Ans.*** 10.5 m/s^2 and ρ = 792 m]

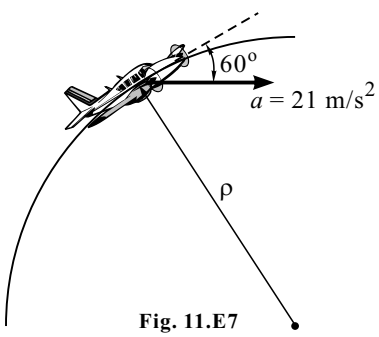

Fig. 11.E7

8. A particle moves in a circular path of 4 m radius. Calculate 4 s later, the particle's total acceleration and distance travelled if **(a)** the speed is constant at 2 m/s and **(b)** speed is 2 m/s at the instant and is increasing at a rate of 0.7 m/s^2.

[***Ans.*** **(a)** a = 1 m/s^2; s = 8 m **(b)** a = 5.802 m/s^2; s = 13.6 m]

9. A car starts from rest on a curved road of 250 m radius and accelerates at a constant tangential acceleration of 0.6 m/s^2. Determine the distance and the time for which car will travel before the magnitude of total acceleration attained by it becomes 0.75 m/s^2.

[***Ans.*** s = 93.63 m and t = 17.68 s]

10. A car starts from rest at $t = 0$ along a circular track of radius 200 m. The rate of increase in speed of the car is uniform. At the end of 60 sec, the speed of the car is 24 km/h. Find the tangential and normal components of acceleration at $t = 30$ s.

[***Ans.*** a_t = 0.111 m/s^2 and a_n = 0.056 m/s^2]

11. The truck travels at a speed of 4 m/s along a circular road that has a radius of 50 m as shown in Fig. 11.E11. For a short distance from $s = 0$, its speed is then increased by $0.05s$ m/s^2, where s is in metres. Determine its speed and the magnitude of its acceleration when it has moved $s = 10$ m.

[***Ans.*** 4.58 m/s and 0.653 m/s^2]

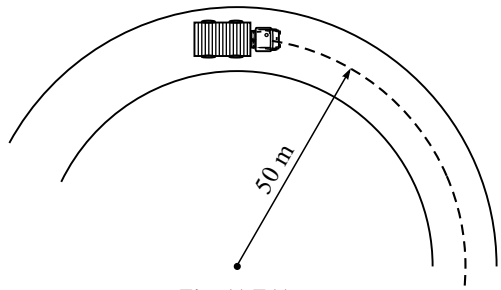

Fig. 11.E11

12. The automobile is originally at rest at $s = 0$ as shown in Fig. 11.E12. If it then starts to increase its speed at $0.02t^2$ m/s^2, where t is in seconds, determine the magnitude of its velocity and acceleration at $s = 180$ m.

[***Ans.*** 39.7 m/s and 20.8 m/s^2]

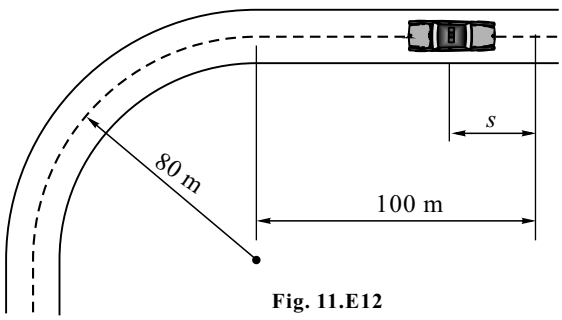

Fig. 11.E12

13. A particle is moving in the x-y plane along a parabolic path given as $y = 1.22\sqrt{x}$ and x and y metres as shown in Fig. 11.E13. At position A, the particle has a speed of 3 m/s and has a rate of change of speed of 3 m/s^2 along the path. What is the acceleration vector of the particle at this position?

[***Ans.*** $3.16\boldsymbol{i} + 0.379\boldsymbol{j}$ m/s^2]

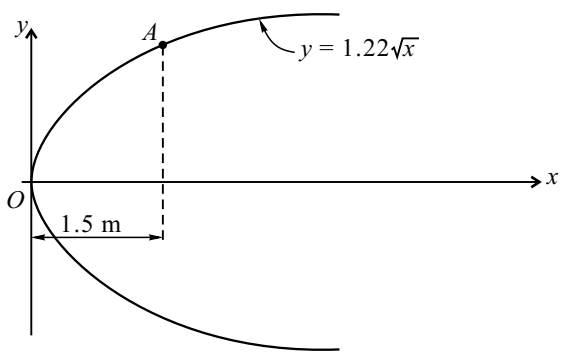

Fig. 11.E13

14. An airplane travels on a curved path as shown in Fig. 11.E14. At P it has a speed of 360 kmph, which is increasing at a rate of 0.5 m/s^2. Determine at P **(a)** the magnitude of total acceleration, and **(b)** the angle made by the acceleration vector with the positive x-axis.

[***Ans.*** **(a)** 0.777 m/s^2 and **(b)** $\theta = 108^\circ$]

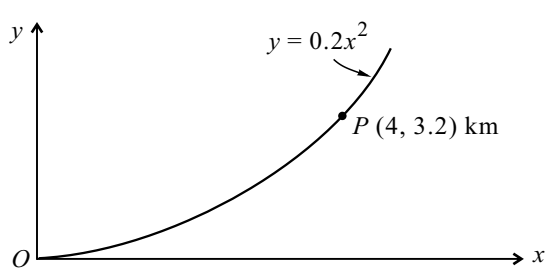

Fig. 11.E14

15. A particle moves along a track, which has a parabolic shape with a constant speed of 100 cm/s. The curve is given by $y = 5 + 0.3x^2$. Find the components of velocity and normal acceleration at $x = 2$ cm.

[***Ans.*** $v_x = 64$ cm/s, $v_y = 76.82$ cm/s and $a_n = 1575$ cm/s^2]

16. The position vector of a particle is defined by $\bar{\boldsymbol{r}} = 2t^2\,\boldsymbol{i} + 4/t^2\,\boldsymbol{j}$(m). Determine when $t = 1$ sec **(a)** the magnitudes of normal and tangential components of acceleration of the particle and **(b)** radius of curvature of the path.

[***Ans.*** $a_n = 14.3$ m/s^2, $a_t = 19.69$ m/s^2 and $R = 5.59$ m]

17. A particle moves in x-y plane and its position is given by $\bar{\boldsymbol{r}} = (3t)\boldsymbol{i} + (4t - 3t^2)\boldsymbol{j}$ where $\bar{\boldsymbol{r}}$ is the position vector of the particle measured in metres at time 't' seconds. Find the radius of curvature of its path and normal and tangential components of acceleration when it crosses x-axis again.

[***Ans.*** $\rho = 6.944$ m, $a_n = 3.6$ m/s^2 and $a_t = 4.8$ m/s^2]

Based on Projectile Motion

18. The basketball player likes to release his foul shots at an angle $\theta = 50^\circ$ to the horizontal as shown in Fig. 11.E18. What initial speed v_0 will cause the ball to pass through the center of the rim?

[***Ans.*** $v_0 = 7$ m/s]

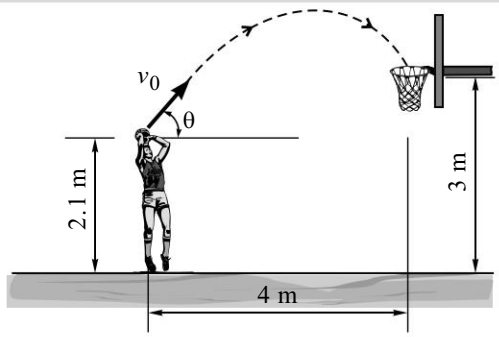

Fig. 11.E18

19. The drinking fountain is designed such that the nozzle is located from the edge of the basin as shown in Fig. 11.E19. Determine the maximum and the minimum speed at which the water can be ejected from the nozzle so that it does not splash over the sides of the basin at B and C, which are at same level.

[***Ans.*** $u_{\min} = 0.838$ m/s and $u_{\max} = 1.764$ m/s]

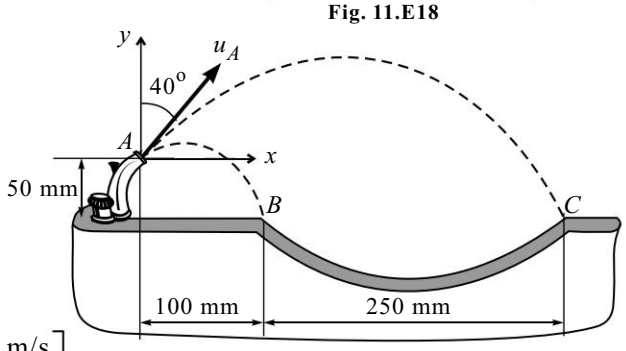

Fig. 11.E19

20. The snowmobile is traveling at 10 m/s as shown in Fig. 11.E20. When it leaves embankment at A, determine **(a)** the time of flight from A to B, **(b)** the speed at which it strikes the ground at B, and **(c)** Range 'R'.

[***Ans.*** **(a)** 2.48 s, **(b)** 19.5 m/s
(c) 19 m]

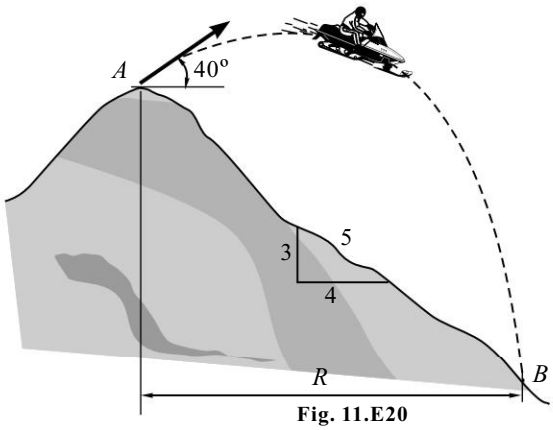

Fig. 11.E20

21. A projectile is launched with an initial speed of 200 m/s at an angle of 60º with respect to the horizontal as shown in Fig. 11.E21. Compute the range R as measured up the incline.

[***Ans.*** R = 2970 m]

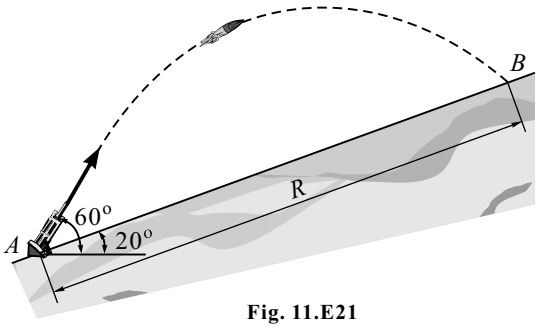

Fig. 11.E21

22. A projectile is fired at an angle of 60º as shown in Fig. 11.E22. At what elevation does it strike the hill whose equation has been estimated as $y = 10^{-5}\,x^2$ m ? Neglect air friction and take the muzzle velocity as 1000 m/s.

[***Ans.*** y = 34.19 m]

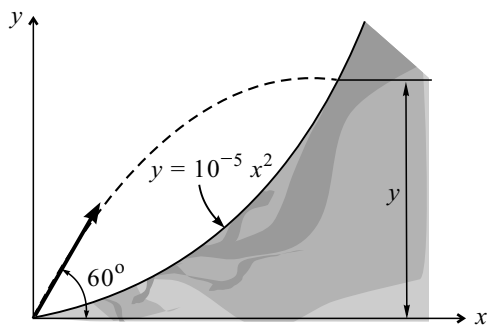

Fig. 11.E22

23. A projectile is launched from point A with the initial conditions shown in Fig. 11.E23. Determine the slant distance 's' which locates the point B of impact. Calculate the time of flight t.

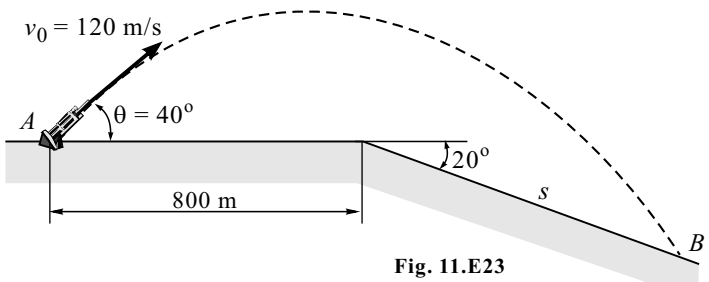

Fig. 11.E23

24. A box released from a helicopter moving horizontally with constant velocity 'u' from a certain height 'h' from the ground takes 5 seconds to reach the ground hitting it at an angle of 75º as shown in Fig. 11.E24. Determine **(a)** the horizontal distance 'x', **(b)** the height 'h' ,and **(c)** the velocity 'u'.

[***Ans.*** **(a)** x = 65.715 m, **(b)** h = 122.625 m
(c) u = 13.143 m/s]

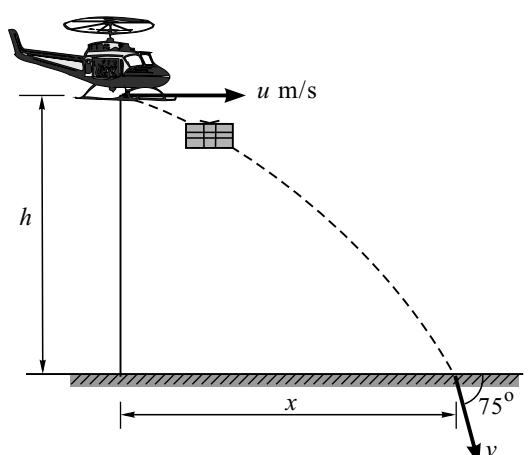

Fig. 11.E24

25. A motorist wants to jump over a ditch as shown in Fig. 11.E25. Find the necessary minimum velocity at A in m/s of the motorcycle. Also, find the direction and the magnitude of the velocity of the motorcycle when it just clears the ditch.

[***Ans.*** 6.26 m/s and 8.85 m/s at 45° to horizontal]

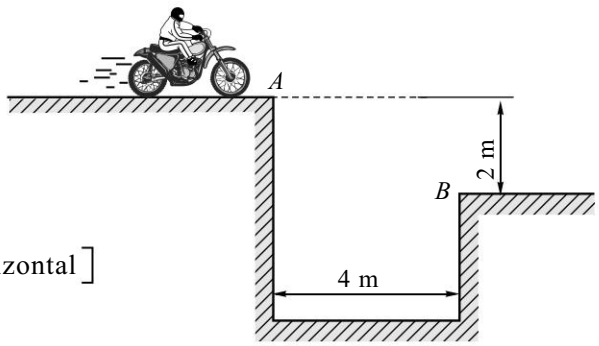

Fig. 11.E25

26. Calculate the minimum speed with which a motorcycle stunt driver must leave the 20° ramp at B in order to clear the ditch at C as shown in Fig. 11.E26.

[***Ans.*** 4.31 m/s]

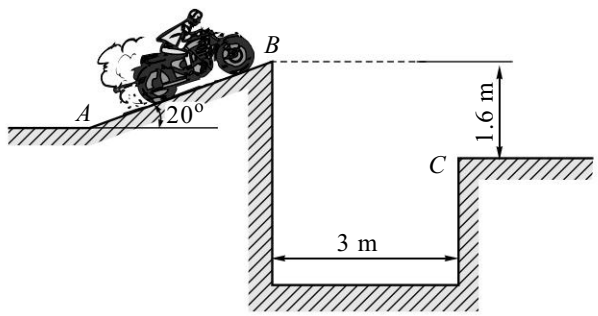

Fig. 11.E26

27. A ball is dropped vertically on a 20° incline at A, the direction of rebound forms an angle of 40° with the vertical. Knowing the ball next strikes the incline at B, determine **(a)** the velocity of rebound at A, and **(b)** the time required for the ball to travel from A to B.

[***Ans.*** 4.78 m/s $\measuredangle 50^\circ$ and $t = 0.976$ s]

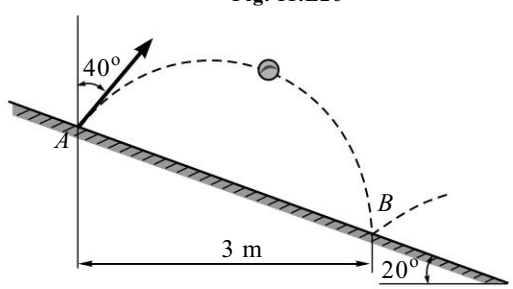

Fig. 11.E27

28. The muzzle velocity of a long-range rifle at A is u = 400 m/s. Determine the two angles of elevation θ which will permit the projectile to hit the mountain target B as shown in Fig. 11.E28.

[***Ans.*** $\theta_1 = 26.1^\circ$ and $\theta_2 = 80.6^\circ$]

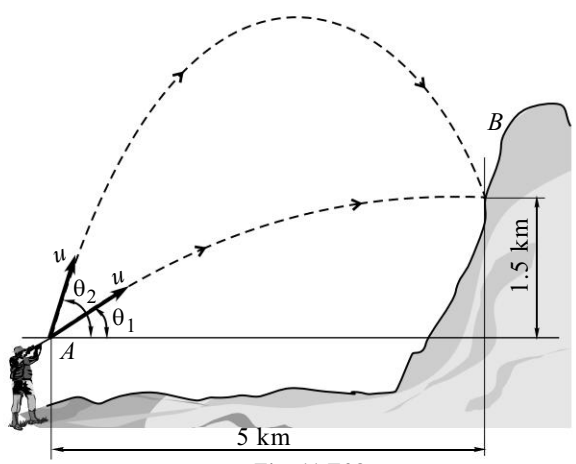

Fig. 11.E28

29. A projectile is fired with velocity 30 m/s at an elevation of 20º to the horizontal. Find the **(a)** time of flight, **(b)** horizontal and vertical range, **(c)** velocity at 1.5 s, and **(d)** horizontal distance between two points on the trajectory having an elevation of 3.5 m.

[***Ans.*** **(a)** 2.09 s **(b)** 58.97 m and 5.366 m **(c)** 28.54 m/s **(d)** 34.84 m]

30. An aeroplane flying at a velocity of 400 kmph horizontally accidentally losses a rivet, when it is 1800 m above the ground. Determine the location of point *B* on the ground, where the rivet will land, if the air resistance is neglected.

[***Ans.*** 2128.5 m]

31. A ball thrown by a boy in a street is caught by another boy on a balcony 4 m above the ground 18 m away after 2 s. Calculate the initial velocity and the angle of projection. Take $g = 10$ m/s^2. Neglect height of boy.

[***Ans.*** 15 m/s and 53.13^o]

32. A ball is projected from *A* with a speed of 3 m/sec at an angle of 25º with horizontal. Determine the coordinates of the point at which the ball will hit the plane, which is 25º below the horizontal. Take $g = 9.8$ m/s^2.

[***Ans.*** $x = 1.407$ m and $y = 0.656$ m]

33. A man standing on a bridge 20 m above the water throws a stone in the horizontal direction. Knowing that the stone hits the water 30 m from the point on the water directly below the man. Determine **(a)** the initial velocity of stone, and **(b)** distance at which the stone would hit the water if it were thrown with the same velocity from the bridge 5 m lower.

[***Ans.*** **(a)** 14.85 m/s **(b)** 25.96 m]

34. A gunman standing on the ground fires from his gun at an altitude of 20 m from the ground. The angle of projection being 60º upwards with the horizontal. If the bullet hits the bird 2.5 sec after firing, find **(a)** the velocity of the bullet as it leaves the gun, and **(b)** the bird is killed instantly. Find the time it takes to reach the ground.

[***Ans.*** 23.4 m/s and 2.019 s]

35. From point *A* a ball is thrown with a horizontal velocity v_o as shown in Fig. 11.E35. If the ball just passes over the top of the wall at *B* and hits the target at *C*. Determine **(a)** the value of v_o and **(b)** the distance '*d*'

[***Ans.*** **(a)** $v_o = 15.5$ m/s **(b)** $d = 5.12$ m]

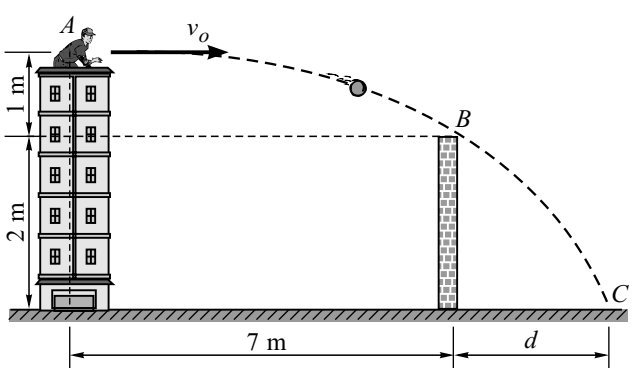

Fig. 11.E35

36. A ball is dropped on to a step at point A and rebounds with a velocity v_o at an angle of 15º with the vertical as shown in Fig. 11.E36. Determine the value of v_o knowing that just before the ball bounces at point B its velocity forms an angle of 12º with the vertical. Also find the time of flight.

[***Ans.*** v_o = 2.67 m/s and t = 0.595 s]

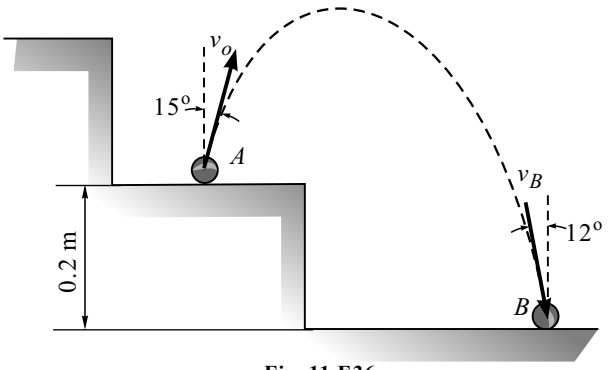

Fig. 11.E36

37. A projectile is fired with an initial velocity v_o at an angle of 20º with the horizontal as shown in Fig. 11.E37. Determine v_o if the projectile hit point B and C. If v_o = 250 m/s, determine the maximum range of projectile.

[***Ans.*** Point B v_o = 214 m/s, point C v_o = 231 m/s and R_{max} = 6371 m]

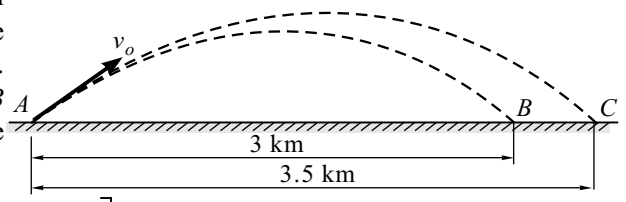

Fig. 11.E37

38. A projectile is fired across a level field so that the range 'R' is maximum and equal to 1000 m. Find the time of flight.

[***Ans.*** 14.28 s]

39. A stone is projected in a vertical plane from the ground with a velocity of 5 m/s. at an elevation of 60º. With what velocity, must another stone be projected at an angle 45º in order to have the same horizontal range? Given g = 10 m/s^2.

[***Ans.*** 4.653 m/s]

40. To meet design criteria, small ball bearings must bounce through an opening of limited size at the top of their trajectory when rebounding from a heavy plate as shown in Fig. 11.E40. Calculate the angle θ made by the rebound velocity with the horizontal and the velocity v of the balls as they pass through the opening.

[***Ans.*** θ = 68.2º and v = 1.253 m/s]

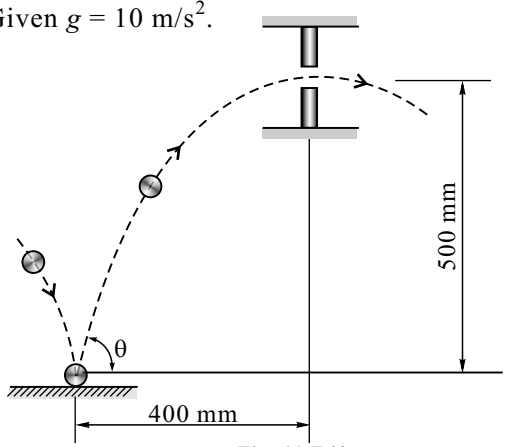

Fig. 11.E40

46. Two trains leave a station in different directions at same instant. Train A travels at 360 kmph at 10º West of North, while train B travels at 450 kmph at 60º East of North. Find the **(a)** relative velocity of train A w.r.t. train B, and **(b)** the two trains are how much apart 2 minutes later.

[***Ans.*** **(a)** $v_{B/A}$ = 130.66 m/s 16º **(b)** s = 15679 m]

41. A missile thrown at 30° to horizontal falls 10 m short of target, and goes 20 m beyond the target when thrown at 40° to horizontal. Determine correct angle of projection if the velocity remains the same in all the cases. Take $g = 10$ m/s^2.

[***Ans.*** 32.48°]

42. A projectile is launched with a speed $v_o = 25$ m/s from the floor of a 5 m high tunnel as shown in Fig. 11.E42. Determine the maximum horizontal range R of the projectile and the corresponding launch angle θ.

[***Ans.*** $R = 46.4$ m and θ = 23.3°]

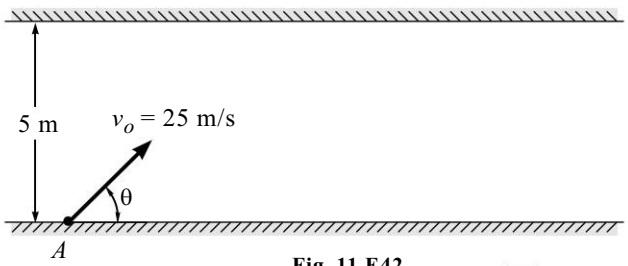

Fig. 11.E42

43. A player throws a ball with an initial velocity of 18 m/s from point A as shown in Fig. 11.E43. Determine maximum height h at which the ball can strike the wall and the corresponding angle α. Take $g = 10$ m/s^2.

[***Ans.*** $h = 14.23$ m and α = 65.16°]

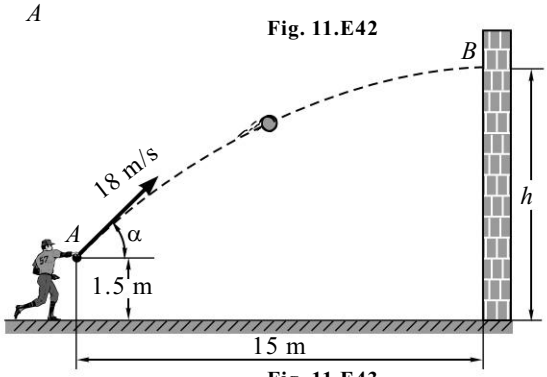

Fig. 11.E43

44. A fighter plane is directly over an antiaircraft gun at time $t = 0$ as shown in Fig. 11.E44. The plane has a speed v_1 of 500 km/h. A shell is fired at $t = 0$ in an attempt to hit the plane. If the muzzle velocity of shell v_0 is 1000 m/s, determine **(a)** the angle at which the gun should be aimed so that the shell will hit the plane, **(b)** the time of impact, **(c)** the distance 'd' where the impact takes place, and **(d)** velocity with which the shell will hit the plane.

[***Ans.*** **(a)** α = 7.984°, **(b)** $t = 2.04$ s,
(c) $d = 283.34$ m
(d) $v = 980.18$ m/s ∠81.86°]

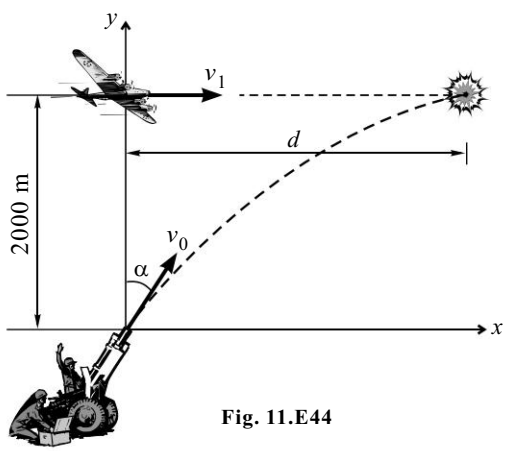

Fig. 11.E44

Based on Relative Motion

45. Two ships A and B leave a port at the same time. The ship A is travelling N-W at 32 kmph and ship B, 40° South of West at 24 km/h. Determine **(a)** the speed of ship B relative to ship A, and **(b)** at what time, they will be 150 km apart.

[***Ans.*** **(a)** $v_{B/A} = 38.3$ km/h ∠83.64° and **(b)** $t = 3.92$ h]

47. The velocities of commuter trains A and B are as shown in Fig. 11.47. Knowing that the speed of each train is constant and that B reaches the crossing 10 min after A has passed through the same crossing, determine **(a)** the relative velocity of B with respect to A, and **(b)** the distance between the fronts of the engines 3 min after A passed through the crossing.

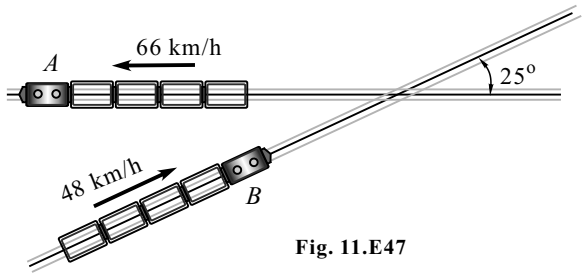

Fig. 11.E47

[***Ans.*** **(a)** $v_{B/A}$ = 30.93 m/s $\angle 10.5^{\circ}$ **(b)** 2.957 km]

48. Automobile A is travelling East at the constant speed of 36 km/h. As automobile A crosses the intersection shown in Fig. 11.E48, automobile B starts from rest, 35 m North of the intersection and moves South with a constant acceleration of 1.2 m/s^2. Determine the position, velocity and acceleration of B relative to A 5 s after A crosses the intersection.

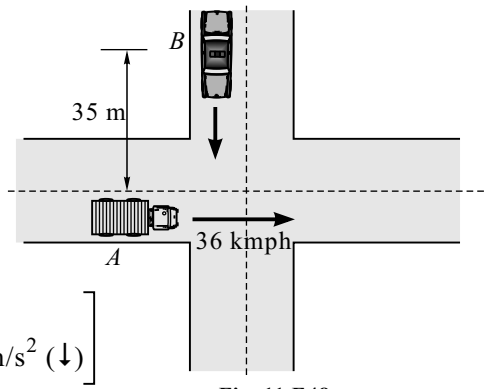

Fig. 11.E48

[***Ans.*** $s_{B/A}$ = 53.85 m; 21.8°,
$v_{B/A}$ = 11.66 m/s; 30.96° and $a_{B/A}$ = 1.2 m/s^2 (↓)]

49. Two cars P and Q pass through the intersection at the same instant and travel with velocities of 36 km/h and 72 km/h along the roads AB and DC respectively (Refer to Fig. 11.E49). Find the velocity of the car Q w.r.t the car P and the distance between the two cars after 2 s.

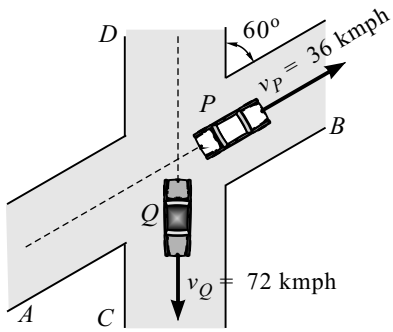

Fig. 11.E49

[***Ans.*** $v_{Q/P}$ = 26.46 m/s ; 70.89°
and s = 52.92 m]

50. A jet of water is discharged at A with a velocity of 20 m/s to strike a moving plate B as shown in Fig. 11.E50. If the plate is moving downward with velocity of 1 m/s. determine the relative velocity of water w.r.t. the plate just before it strikes.

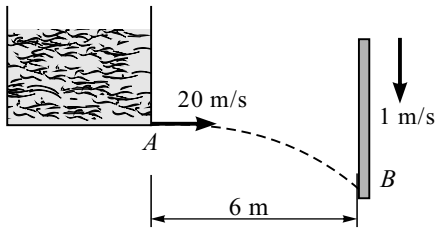

Fig. 11.E50

[***Ans.*** $v_{W/P}$ = 20.094 m/s and 5.549°]

[II] Review Questions

1. Explain the following:

(i) Curvilinear motion by rectangular component method.

(ii) Curvilinear motion by tangential and normal component method.

2. Derive velocity by rectangular component method.

3. Derive acceleration by rectangular component method.

4. Derive the relation for component of normal acceleration $a_n = \frac{v^2}{\rho}$.

5. Show the relation between rectangular components and tangential and normal components of acceleration.

6. What is projectile motion?

7. Derive the general equation of projectile motion.

8. Derive the expression for maximum height for projectile motion.

[III] Fill in the Blanks

1. If a particle is moving along curved path then it is said to perform _____ motion.

2. In _____ motion, displacement, velocity and acceleration are always directed along the path of a particle.

3. The component of normal acceleration (a_n) is _____ acceleration.

4. The component of tangential acceleration (a_t) is equal to the rate of change of _____.

5. For uniform speed, a_t = ____ (uniform circular motion).

6. If any object is thrown obliquely in air it follows _____ path and such a motion is called projectile motion.

7. Projectile motion is the combination of _____ motion with constant velocity and _____ motion under gravity, happening simultaneously.

[IV] Multiple-choice Questions

Select the appropriate answer from the given options.

1. In curvilinear motion velocity of a particle is always _____ to the curved path at every instant.

(a) tangential **(b)** normal **(c)** horizontal **(d)** vertical

2. In curvilinear motion direction of acceleration _____.

(a) remains constant **(b)** changes at every instant
(c) is always tangential **(d)** is always normal

3. If data is given in rectangular component form then radius of curvature is calculated by the relation _____.

(a) $\rho = \left| \dfrac{\left[1 + \left(\dfrac{dy}{dx}\right)^2\right]^{3/2}}{\dfrac{d^2y}{dx^2}} \right|$ **(b)** $\rho = \left| \dfrac{\left[1 + \left(\dfrac{dy}{dx}\right)^2\right]^{2/3}}{\dfrac{d^2y}{dx^2}} \right|$

(c) $\rho = \left| \dfrac{(v_x^2 + v_y^2)^{3/2}}{v_x a_y - v_y a_x} \right|$ **(d)** $\rho = \left| \dfrac{(v_x^2 - v_y^2)^{3/2}}{v_x a_y + v_y a_x} \right|$

4. Component of tangential acceleration at is calculated by the relation _____.

(a) $a_t = (a)(e_t)$ **(b)** $a_t = \bar{a} \cdot \bar{e}_t$ **(c)** $a_t = \bar{a} \times \bar{e}_t$ **(d)** $a_t = \bar{a} \cdot \bar{v}_t$

5. Maximum height of projectile from a point of projection is given by the relation _____.

(a) $H = \dfrac{2u \sin\theta}{g}$ **(b)** $H = \dfrac{2u^2 \sin 2\theta}{g}$ **(c)** $H = \dfrac{u^2 \sin^2\theta}{g}$ **(d)** $H = \dfrac{u^2 \sin^2\theta}{2g}$

6. If two projectiles having same velocity of projection, but complementary angle of projection, then the range of both the projectiles will be _____.

(a) same **(b)** different **(c)** zero **(d)** none of these

CHAPTER

12

KINEMATICS OF RIGID BODIES

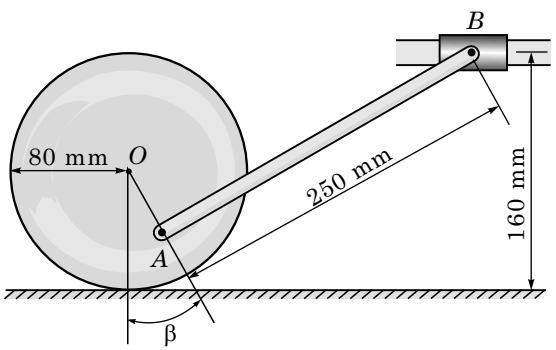

Learning Objectives

After reading this chapter, you will be able to answer the following questions:

- *What is translation motion, rotational motion and plane motion?*
- *What is the relationship between rope, pulley and block?*
- *What is the relationship between two contact pulleys rotating without slipping?*
- *What is meant by general plane motion?*
- *What is link mechanism?*
- *How can you locate the ICR?*

12.1 INTRODUCTION

In kinematics of particles, we have discussed the relationship of displacement, velocity and acceleration w.r.t. time. *Kinematics* means there is no involvement of force and mass. *Particle* means there is no involvement of dimension in analysis.

Now, in *kinematics of rigid bodies,* we have to consider the dimension of a body but still force and mass are not involved.

12.2 TYPES OF MOTION

A particle can perform only translation motion but a rigid body can perform any motion among the three basic motions.

1. Translation motion,

2. Rotational motion and

3. Plane motion.

12.2.1 Translation Motion

A body is said to perform ***translation motion*** *if an imaginary straight line drawn on the body remains parallel to original position during its motion at any instant.*

It is observed that all the particles of the body move along parallel paths in a translation motion.

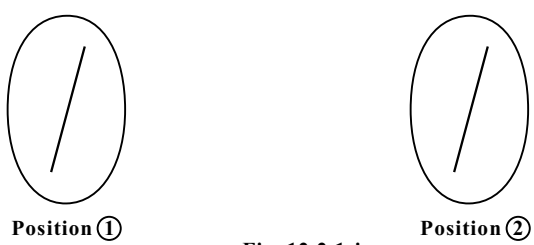

Fig. 12.2.1-i

Translation motion can happen in rectilinear form or curvilinear form.

1. Rectilinear Translation Motion *A body is performing* ***rectilinear translation motion****, means the body is shifting its position from position ① to ② along a* ***straight*** *path.* Hence, we can observe the path traced by different particles of the body, say point A, G and B move along parallel paths. Therefore, displacement, velocity and acceleration of each and every particle at any instant is same.

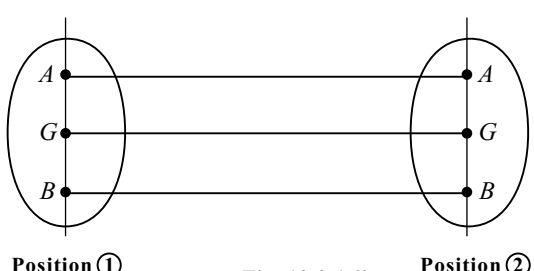

Fig. 12.2.1-ii

2. **Curvilinear Translation Motion :** *A body is performing* ***curvilinear translation motion****, means the body is shifting its position from position ① to ② along a* ***curved*** *path.* Hence, we can observe path traced by different particles of the body, say point *A*, *G* and *B* moving along parallel paths. Therefore, displacement, velocity and acceleration of each and every particle at any instant is same.

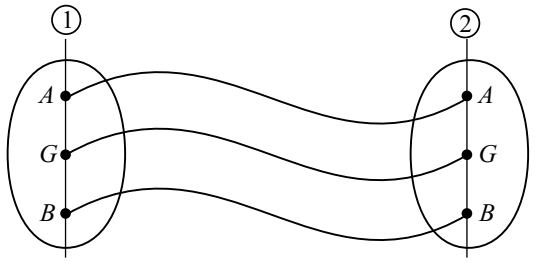

Fig. 12.2.1-iii

Note : In translation motion (rectilinear as well as curvilinear), displacement, velocity and acceleration of each and every particle at any instant is same. Therefore, considering all the above effects at G (*centre of gravity*), we can assume the rigid body is similar to particle in translation motion.

12.2.2 Fixed Axis Rotational Motion

Consider the body rotating about an axis perpendicular to the plane of motion. The different points on the body move along the concentric circular path. Here, the point *O* is acting as the *centre of rotation* and axis perpendicular to the plane of motion and passing through the centre of rotation is called *axis of rotation*. This axis is stationary therefore such motion is called *fixed axis rotational motion*.

For rotational motion, terms like displacement, velocity and acceleration are specified as angular displacement, angular velocity and angular acceleration.

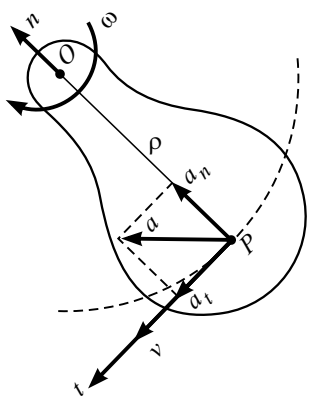

Fig. 12.2.2-i

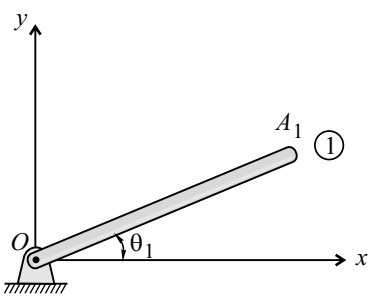

Fig. 12.2.2-ii(a)

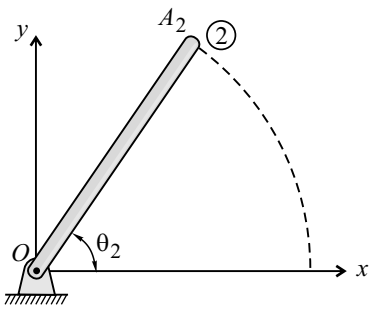

Fig. 12.2.2-ii(b)

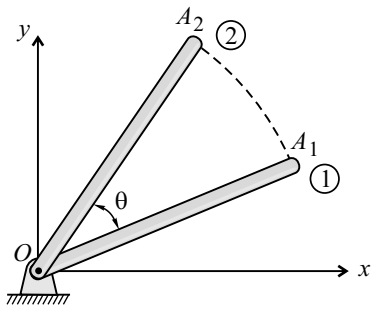

Fig. 12.2.2-ii(c)

Rod *OA* is hinged at *O*. Initial position ① of rod *OA* is inclined at θ_1 with *x*-axis. Final position ② of rod *OA* is inclined at θ_2 with the *x*-axis.

1. Angular Displacement (θ - theta)

If θ_1 is the angular position of the body in position ① and it changes to θ_2 at position ② then ***angular displacement*** of the body θ is given as follows :

$$\text{Angular displacement} = \text{Final angular position} - \text{Initial angular position}$$

$$\theta = \theta_2 - \theta_1$$

Angular displacement is measured in unit radian.

$$1 \text{ revolution} = 2\pi \text{ radian} = 360^{\circ}$$

2. Angular Velocity (ω - omega)

The rate of change of angular position with respect to time is called the ***angular velocity*** *of the rotating body.*

$$\frac{d\theta}{dt} = \omega$$

The direction of angular velocity is perpendicular to the plane of motion and it is decided by the right-hand-thumb rule. For anticlockwise sense of rotation, the direction of stretched right-hand-thumb is towards the observer, therefore, it is positive and for clockwise it is negative.

$$\omega\ (\circlearrowleft)\ +\text{ve and } \omega\ (\circlearrowright)\ -\text{ve}$$

Angular velocity is measured in radians/second.

$$1 \text{ rpm} = \frac{2\pi}{60} \text{ rad/s}$$

Angular Acceleration (α - alpha)

The rate of change of angular velocity with respect to time is called the ***angular acceleration*** *of the rotating body.*

$$\frac{d\omega}{dt} = \alpha$$

The direction of angular acceleration acts along the axis of rotation, i.e., perpendicular to the plane of motion and is similarly decided by the right-hand-thumb rule.

The sense of angular acceleration is same as the sense of angular velocity, if the angular velocity increases with time and is opposite of the sense of angular velocity, if the angular velocity decreases with time.

Angular acceleration is measured in radians/second^2.

Types of Fixed Axis Rotational Motion

1. Motion with Uniform (Constant) Angular Velocity

$$\text{Angular displacement} = \text{Angular velocity} \times \text{Time}$$

$$\theta = \omega \times t$$

2. Motion with Uniform (Constant) Angular Acceleration

$$\omega = \omega_0 + \alpha t$$

$$\theta = \omega_0 t + \frac{1}{2}\alpha t^2$$

$$\omega^2 = \omega_0^2 + 2\alpha\theta$$

where ω_0 = Initial angular velocity
ω = Final angular velocity
α = Angular acceleration
θ = Angular displacement
t = Time interval

3. Motion with Variable Angular Acceleration

$$\alpha = \frac{d\omega}{dt} \text{ or } \alpha = \omega \frac{d\omega}{d\theta} \quad \therefore \omega = \frac{d\theta}{dt}$$

Derivation of Rotational Motion with Uniform (Constant) Angular Acceleration

(i) $\alpha = \dfrac{d\omega}{dt}$

$\therefore d\omega = \alpha\, dt$

Integrating both sides, we get

$$\int_{\omega_0}^{\omega} d\omega = \alpha \int_0^t dt$$

$\therefore \omega - \omega_0 = \alpha t$

$\therefore \omega = \omega_0 + \alpha t$

(ii) $\omega = \dfrac{d\theta}{dt}$

$\therefore d\theta = \omega\, dt$

Integrating both sides, we get

$$\int_0^{\theta} d\theta = \int_0^t \omega\, dt \quad \Rightarrow \quad \int_0^{\theta} d\theta = \int_0^t (\omega_0 + \alpha t)\, dt$$

$$\theta = \omega_0 t + \frac{1}{2}\alpha t^2$$

(ii) $\alpha = \dfrac{d\omega}{dt} \quad \therefore \alpha = \dfrac{d\omega}{d\theta} \cdot \dfrac{d\theta}{dt}$

$\therefore \alpha = \omega \dfrac{d\omega}{d\theta}$

$\therefore \omega\, d\omega = \alpha\, d\theta$

Integrating both sides, we get

$$\int_{\omega_0}^{\omega} \omega\, d\omega = \int_0^{\theta} \alpha\, d\theta$$

$\therefore \dfrac{1}{2}(\omega^2 - \omega_0^2) = \alpha\theta$

$\therefore \omega^2 = \omega_0^2 + 2\alpha\theta$

Comparison Between Translational and Rotational Motion

Translational Motion	Rotational Motion
$v = u + at$	$\omega = \omega_0 + \alpha t$
$s = ut + \frac{1}{2}at^2$	$\theta = \omega_0 t + \frac{1}{2}\alpha t^2$
$v^2 = u^2 + 2as$	$\omega^2 = \omega_0^2 + 2\alpha\theta$

12.3 RELATIONSHIP BETWEEN ROPE, PULLEY AND BLOCK

Figure 12.3-i shows a pulley of radius r mounted on pin. Block A is connected by a rope which is wound around the pulley. The rotational motion of pulley will relate to translation motion.

Consider at given instant the pulley has an angular position (θ), angular velocity (ω) and angular acceleration (α).

The block A will have corresponding position (x_A), velocity (v_A) and acceleration (a_A) at this instant.

Let P be the common point between pulley and rope. Here, the pulley is performing rotational motion and block is performing translation motion. Since P is the common point of contact between both pulley and rope, we have

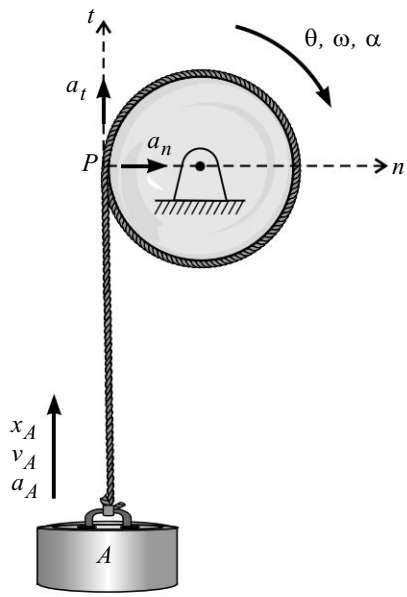

Fig. 12.3-i

$$x_P = x_A = r\theta$$
$$v_P = v_A = r\omega$$
$$a_P = a_A = r\alpha$$

$\{a_A$ is the component of acceleration along tangential direction $a_t\}$

$$a_n = \frac{v^2}{r}$$

$\{a_n$ is the component of acceleration along normal direction $a_n\}$

12.4 RELATIONSHIP BETWEEN TWO CONTACT PULLEYS ROTATING WITHOUT SLIPPING

Consider pulley ① of radius r_1 and pulley ② of radius r_2 mounted on pins rotating as shown in Fig. 12.4-i without slipping.

At a given instant let pulley ① have angular position θ_1, angular velocity ω_1 and angular acceleration α_1. Let pulley ② have angular position θ_2, angular velocity ω_2 and angular acceleration α_2.

Let P be the common point of contact. If pulley ① rotates clockwise, pulley ② will rotate anticlockwise.

Assuming point P on pulley ①, we have the following relationship:

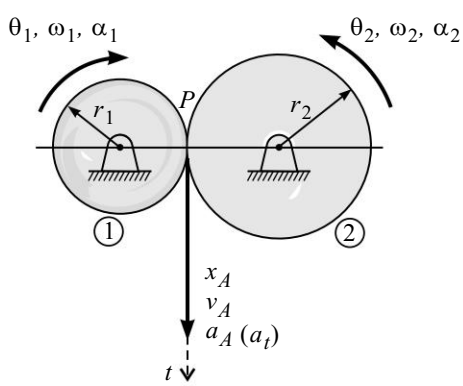

Fig. 12.4-i

$$\left.\begin{aligned} x_1 &= r_1\theta_1 = x_P \\ v_1 &= r_1\omega_1 = v_P \\ a_1 &= r_1\alpha_1 = a_P\ (a_t) \end{aligned}\right\} \quad \ldots (12.1)$$

Assuming point P on pulley ②, we have the following relationship

$$\left.\begin{aligned} x_2 &= r_2\theta_2 = x_P \\ v_2 &= r_2\omega_2 = v_P \\ a_2 &= r_2\alpha_2 = a_P \ (a_t) \end{aligned}\right\} \qquad \ldots (12.2)$$

From relations (12.1) and (12.2), we have

$$\begin{aligned} x_P &= r_1\theta_1 = r_2\theta_2 \\ v_P &= r_1\omega_1 = r_2\omega_2 \\ a_P &= r_1\alpha_1 = r_2\alpha_2 \end{aligned}$$

12.5 GENERAL PLANE MOTION

General plane motion *is the combination of translation motion and rotational motion happening simultaneously.*

Example

Consider a rod AB having one end A on vertical wall and other end B on floor is sliding. Therefore, velocity of point A (v_A) will be vertically down and that of point B (v_B) will be horizontally towards right.

Drawing perpendicular to direction of v_A and v_B we get centre I. Hence, I is the ***Instantaneous Centre of Rotation (ICR)***.

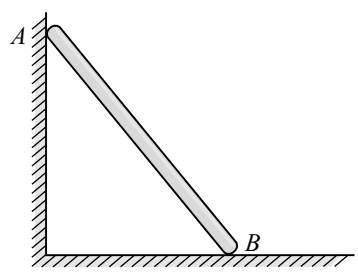

Fig. 12.5-i(a)

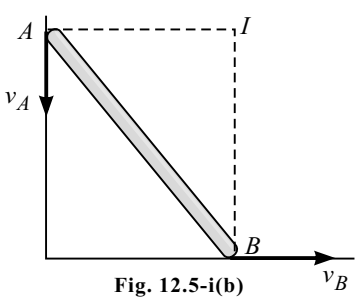

Fig. 12.5-i(b)

Why is *I* called ICR?

I is called Instantaneous Centre of Rotation because the velocity of point A and B at an instance is giving I. It means at some other instant rod AB will have position $A'B'$ and velocities v_A' and v_B'. Therefore, its ICR will be I'.

How can you identify General Plane Motion?

In this example, we have rod AB slipping against vertical wall and horizontal floor. AB is the one position after some next instant $A'B'$ is another position. Here, we observe that the rod had shifted its position, means there is translation motion involved, also the angle of rod had changed means there is rotational motion. This is happening simultaneously. Therefore, rod is performing general plane motion.

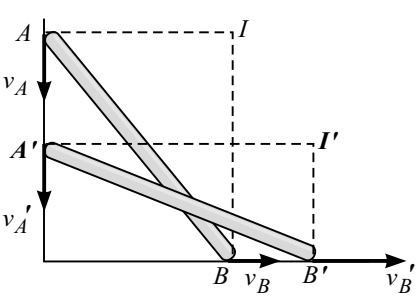

Fig. 12.5-i(c)

Note : When a body is performing general plane motion, it is assumed to perform fixed axis rotation about some centre say I. This centre of rotation changes its position instant to instant. Therefore, it is called as *Instantaneous Centre of Rotation (ICR)*.

12.5.1 Link Mechanism

Bar AB is linked to bar BC. At C, there is slider which is free to slide along the horizontal slot. Link AB is performing fixed axis rotation about point A, means A is the centre of rotation and AB is the radius. If ω_{AB} is the angular velocity given to bar AB then v_B is the linear velocity of end point B. The slide C is sliding horizontally. Therefore, v_C is the linear velocity of slider. Here, link BC is performing general plane motion. So, it must have instantaneous centre of rotation. By drawing perpendiculars to directions of v_B and v_C, we can locate the intersection point as I (ICR).

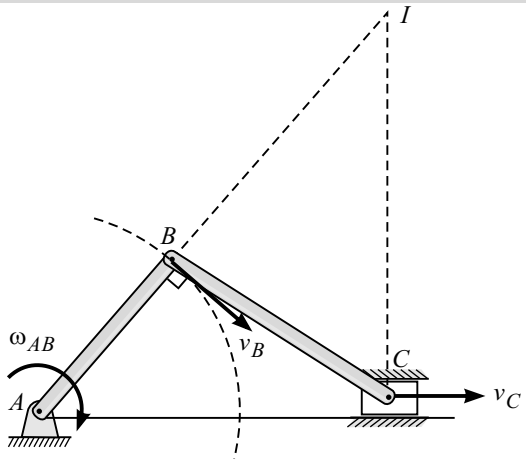

Fig. 12.5-1-i

12.5.2 Rolling of a Body Without Slipping

A rolling body is performing general phase motion. If a body is rolling without slipping on a stationary surface then the point of contact with stationary surface is the *Instantaneous Centre of Rotation*. In Fig. 12.5.2-i I is the ICR.

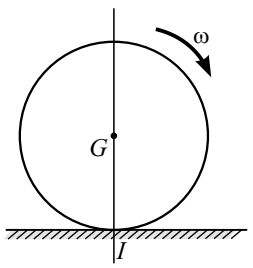

Fig. 12.5.2-i

Figure 12.5.2-ii shows body with various shapes if rolls it has to roll about point I. Triangle, square, pentagon, hexagon and polygon with infinite sides (circle) will have I as the ICR.

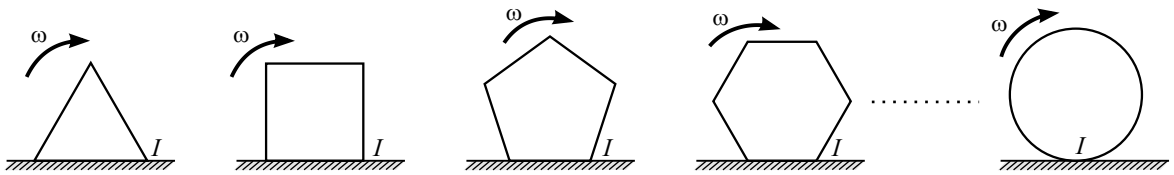

Fig. 12.5.2-ii

12.5.3 How to Locate the ICR

Let us consider examples for better understanding.

Example 1

If rod AB is performing plane motion and velocity of two points A and B are known in direction then perpendicular line drawn to the direction of velocity v_A and v_B will intersection at some point I. Here, I is the ICR.

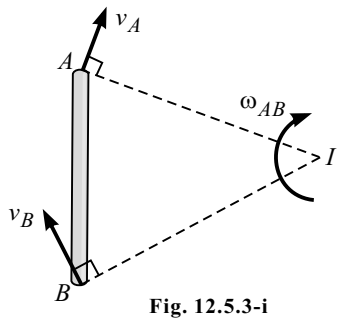

Fig. 12.5.3-i

Relation between linear velocity and angular velocity

In general, we know $v = r\omega$

From Fig. 12.5.3-i, we have

$v_A = (IA)\omega_{AB}$

$v_B = (IB)\omega_{AB}$

Or $\omega_{AB} = \dfrac{v_A}{IA} = \dfrac{v_B}{IB}$

Example 2

Consider the rod AB performing plane motion. The velocity of end point A is v_A = 8 m/s and velocity of end point B is v_B = 3 m/s.

v_A is parallel to v_B.

Draw v_A and v_B in proportion to their magnitude (i.e., v_A = 8 m/s is more than v_B = 3 m/s). Then draw line from tip of v_A to tip of v_B and extend till it intersects the AB extension at I. Here, I is the ICR.

We have the following relation:

$v_A = (IA)\omega_{AB}$

$v_B = (IB)\omega_{AB}$

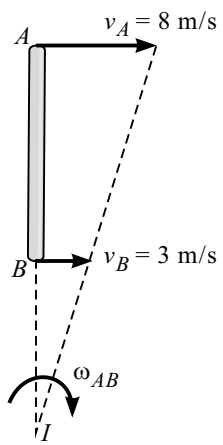

Fig. 12.5.3-ii

Example 3

Consider a rod AB is performing plane motion. The velocity of end point A is v_A = 8 m/s (→) and velocity of end point B is v_B = 3 m/s(←).

v_A is parallel to v_B.

Draw v_A and v_B in proportion to their magnitude [i.e., v_A = 8 m/s (→) is greater than v_B = 3 m/s (←)]. Then draw line from tip of v_A to tip of v_B and extend till it intersects the AB extension at I. Here, I is the ICR.

We have the following relation:

$v_A = (IA)\omega_{AB}$

$v_B = (IB)\omega_{AB}$

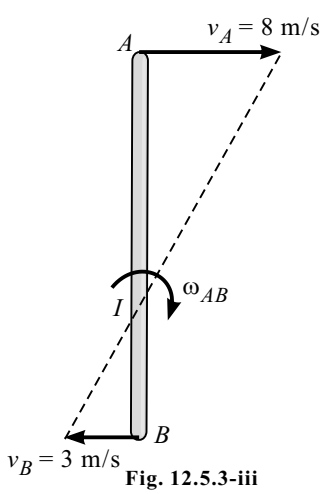

Fig. 12.5.3-iii

Solved Problems

Problem 1

A flywheel starts from rest and after half a minute rotates at 2000 rpm. Calculate the **(i)** angular acceleration, and **(ii)** number of revolution made by the wheel within this period.

Solution

$\omega_0 = 0$ $\qquad$ $\omega = \dfrac{2\pi \times 2000}{60}$

$t = 30$ s $\qquad$ $\omega = 209.44$

(i) $\omega = \omega_0 + \alpha t$

$209.44 = 0 + \alpha \times 30$

$\alpha = 6.98$ rad/s^2

(ii) $\theta = \omega_0 t + \dfrac{1}{2}\alpha \times t^2$

$\theta = 0 + \dfrac{1}{2} \times 6.98 \times 30^2$

$\theta = 3141$ rad

Number of revolutions $n = \dfrac{\theta}{2\pi} = \dfrac{3141}{2\pi}$

$n = 500$

Problem 2

A rotor of turbine has an initial angular velocity of 1800 rpm. Accelerating uniformly, it doubled its velocity in 12 s. Find the revolutions performed by it in this interval.

Solution

$\omega_0 = \dfrac{2\pi N}{60} = \dfrac{2\pi \times 1800}{60}$

$\omega_0 = 60\pi$ rad/s and $\omega = 2\omega_0 = 120\pi$ rad/s

$t = 12$ s

$\omega = \omega_0 + \alpha t$

$120\pi = 60\pi + \alpha(12)$

$\alpha = 5\pi$ rad/s^2

$\theta = \omega_0 t + \dfrac{1}{2}\alpha t^2$

$\theta = 60\pi \times 12 + \dfrac{1}{2} \times 5\pi \times 12^2$

$\theta = 1080\pi$ rad

Number of revolutions $n = \dfrac{\theta}{2\pi} = \dfrac{1080\pi}{2\pi}$

$n = 540$

Problem 3

A flywheel starting from rest and accelerating uniformly performs 25 revolutions in 5 s. Find its angular acceleration and its angular velocity after 10 s.

Solution

$1 \text{ rev} = 2\pi$; $t = 5$ s ; $\omega_0 = 0$

$\theta = 25 \times 2\pi$

$\theta = 50\pi$ rad

$$\theta = \omega_0 t + \frac{1}{2}\alpha t^2$$

$$50\pi = 0 + \frac{1}{2} \times \alpha \times 5^2$$

$\alpha = 4\pi$ rad/s^2

α is constant, at $t = 10$ s

$\omega = \omega_0 + \alpha t$

$\omega = 0 + 4\pi \times 10$

$\omega = 40\pi$ rad/s

Problem 4

A table fan rotating at a speed of 2400 rpm is switched off and the resulting variation of rpm with time is as shown in Fig. 12.4. Determine the total number of revolutions the fan has made in 25 s when it finally comes to rest.

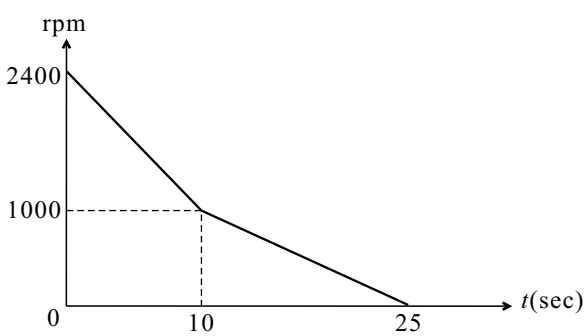

Fig. 12.4

Solution

We know, $\omega = \dfrac{2\pi N}{60}$ (where N is rpm)

The above graph can be observed as a ω-t diagram and can be compared with v-t diagram. In v-t diagram, area under v-t diagram is linear displacement.

Similarly, ω-t diagram, area under ω-t diagram will be angular displacement.

$$\therefore \theta = \left(\frac{1}{2} \times 10 \times 1400 + 10 \times 1000 + \frac{1}{2} \times 15 \times 1000\right)\frac{2\pi}{60}$$

$\therefore \theta = 816.67\,\pi$ rad

$$\therefore \text{Number of revolutions } n = \frac{\theta}{2\pi} = \frac{816.67\pi}{2\pi}$$

$n = 408.33$

Problem 5

In the manufacture of constant angular acceleration electric motors for special applications, a requirement is that angular acceleration should not deviate more than 1% from nominal design value of $\alpha = 80$ rad/s^2. Each motor coming off the assembly line is individually tested to meet the requirement. **(i)** If each unit is started and run exactly 5 s, find the acceptable ranges of angular velocity in revolutions per minute that motors should have at the end of this time interval, and **(ii)** Find the corresponding range of total angular displacement during this time interval.

Solution

(i) $\omega_0 = 0, \quad r = 80 \text{ rad/s}^2, \quad t = 5 \text{ s}$

$\omega = \omega_0 + \alpha t$

$\omega = 0 + 80 \times 5$

$\omega = 400$ rad/s

Now, 1% of 400 is 4.

$\therefore$ 1% deviation means

$\omega_1 = 400 - 4$ and $\omega_2 = 400 + 4$

$\omega_1 = 396$ rad/s and $\omega_2 = 404$ rad/s

$\because \omega = \dfrac{2\pi N}{60} \qquad \therefore N_1 = \dfrac{396 \times 60}{2\pi} \qquad \therefore N_2 = \dfrac{404 \times 60}{2\pi}$

$\therefore N_1 = 3781.52$ rpm and $N_2 = 3857.92$

(ii) $\omega_0 = 0, \quad \alpha = 80 \text{ rad/s}^2, \quad t = 5 \text{ s}$

$\theta = \omega_0 t + \dfrac{1}{2}\alpha \times t^2$

$\theta = 0 + \dfrac{1}{2} \times 80 \times 5^2$

$\theta = 1000$ rad

1% of 1000 is 10

$\therefore$ 1% Deviation means

$\theta_1 = 1000 - 10$ and $\theta_2 = 1000 + 10$

$\theta_1 = 990$ rad and $\theta_2 = 1010$ rad

Problem 6

A wheel of a motor car rotating with constant acceleration makes 40 revolutions during its fourth second. Find the initial angular velocity of the wheel. The constant angular acceleration of the wheel is 9.8 rad/s^2. What will be the linear velocity of wheel after fourth second, if its diameter is 80 cm?

Solution

(i) Let ω_0 be the initial angular velocity of the wheel

$\theta_4 - \theta_3 = (40 \times 2\pi)$ rad $\qquad (\because$ 1 rev $= 2\pi$ radians)

$\theta_4 - \theta_3 = 80\pi$ rad

$\theta_4 - \theta_3 = (\omega_0 \times 4 + \frac{1}{2} \times 9.8 \times 4^2) - (\omega_0 \times 3 + \frac{1}{2} \times 9.8 \times 3^2)$

$80\pi = 4\omega_0 + 78.4 - 3\omega_0 - 44.1$

$\omega_0 = 217.03$ rad/s.

(ii) Angular velocity of the wheel after fourth second will be

$\omega_4 = \omega_0 + \alpha t = 217.03 + 9.8 \times 4$

$\omega_4 = 256.23$ rad/s

Linear velocity of the wheel after fourth second will be

$v_4 = r\omega_4 = 40 \times 256.23$

$v_4 = 10249.2$ cm/s

Problem 7

The angular acceleration α (taken clockwise as positive) of a flywheel is given by $\alpha = -4t$ in rad/s^2 where t is in s. If the initial angular speed of rotation is 3000 rpm clockwise determine the **(i)** time required for the angular speed to change to 3000 rpm anticlockwise and **(ii)** the total number of revolutions completed by the flywheel during this time.

Solution

$\alpha = -4t$

$\frac{d\omega}{dt} = -4t$

$d\omega = -4t\, dt$

Integrating both the sides, we have

$\int d\omega = -4t \int dt$

$\omega = -4\frac{t^2}{2} + c_1$

At $t = 0$, $\omega = \frac{2\pi \times 3000}{60} = 100\pi$ r/s

$\therefore\ c_1 = 100\pi$

$\omega = -2t^2 + 100\pi$ ..... (I)

$\frac{d\theta}{dt} = -2t^2 + 100\pi$

$d\theta = (-2t^2 + 100\pi)\, dt$

Integrating both the sides, we have

$\int d\theta = \int (-2t^2 + 100\pi)\, dt$

$\theta = \frac{-2t^3}{3} + 100\pi\, t + c_2$

At $t = 0$, $\theta = 0$, $\therefore\ c_2 = 0$

$$\theta = \frac{-2t^3}{3} + 100\pi t \qquad \text{..... (II)}$$

(i) Let 't' be the time required for the angular speed to change to 3000 rpm anticlockwise, i.e., $\omega = -100\pi$ rad/s

From Eq. (I), we get

$-100\pi = -2t^2 + 100\pi$

$t = 17.72$ s

Put $t = 17.72$ s in Eq. (II) for angular displacement

$$\theta = -2 \times \frac{(17.72)^3}{3} + 100\pi \times 17.72$$

$\theta = 1857.53$ rad

(ii) Consider initial position OA ($\omega = 100\,\pi$ rad/s ↻)

Intermediate position OB ($\omega = 0$)

Final Position OC ($\omega = 100\,\pi$ rad/s ↺)

Consider motion from OA to OB

Let t_1 be the time taken by flywheel to rotate in clockwise direction till it comes to rest and then reversed it direction.

At the above-said instant, $\omega = 0$

From Eq. (I), we get

$\omega = -2t^2 + 100\pi$

$0 = -2t_1^2 + 100\pi$

$t_1 = 12.53$ s

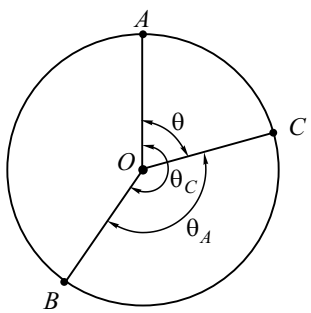

Fig. 12.7

From Eq. (II), we get

$$\theta = \frac{-2t^2}{3} + 100\pi\, t$$

$$\theta_C = -2 \times \frac{(12.53)^3}{3} + 100\pi \times (12.53)$$

$\theta_C = 2624.93$ rad

From Fig. 12.7, we have

$\theta_C - \theta_A = \theta$

$2624.93 - \theta_A = 1857.53$

$\theta_A = 767.4$ rad

$\therefore$ Total angular displacement $= \theta_C + \theta_A$

$\therefore$ Number of revolutions $n = \dfrac{\theta_C + \theta_A}{2\pi} = \dfrac{2624.93 + 767.4}{2\pi}$

$n = 540$

Problem 8

A bar pivoted at one end and moving 5 rad/s clockwise is subjected to a constant angular deceleration as shown in Fig. 12.8. After a certain time, the bar has angular displacement θ = 8 radians anticlockwise and has moved through total angle of 20.5 radians. What is its angular velocity at the end of this time interval?

Solution

At initial position *OA*, $\omega = 5$ rad/s (↻)

At intermediate position *OB*, $\omega = 0$

At final position *OC*, $\omega = ?$

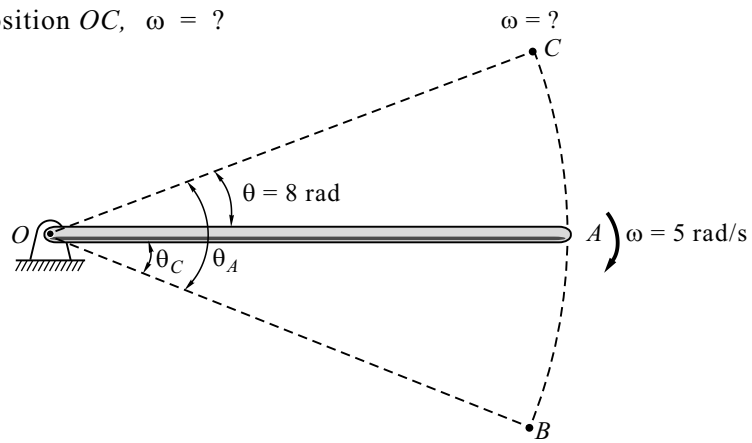

Fig. 12.8

Total angular displacement $= \theta_{Clockwise} + \theta_{Anticlockwise} = 20.5$

$\therefore \theta_C + \theta_A = 20.5$ ..... (I)

$\theta_A - \theta_C = 8$ {from Fig. 12.8} ..... (II)

Solving Eqs. (I) and (II),

$\theta_C = 6.25$ rad

$\theta_A = 14.25$ rad

Consider motion of bar from *OA* to *OB*.

$w^2 = w_0^2 + 2\alpha\, \theta_C$

$0 = 5^2 + 2(\alpha)\,(6.25)$

$\alpha = -2$ rad/s^2 (–ve sign indicates retardation)

Consider motion of bar from *OA* to *OC*.

$\omega^2 = \omega_0^2 + 2\alpha\theta$

$\omega^2 = 5^2 + 2(-2)\,(-8)$

$\omega = 7.55$ rad/s

Problem 9

The angular acceleration of rotor is given by $\alpha = kt^{-1/2}$ where 'α' is in rad/s^2 and 't' is in s.

At $t = 1$ s, the angular velocity $\omega = 10$ rad/s and the angular displacement $v = \frac{10}{3}$ rad.

At $t = 0$, $\theta = -4$ rad. Determine θ, ω and α when $t = 4$ s.

Solution

$$\alpha = kt^{-1/2} \qquad \text{..... (I)}$$

$$\frac{d\omega}{dt} = k\,t^{-1/2} \quad \Rightarrow \quad d\omega = k\,t^{-1/2}\,dt$$

Integrating both sides, we have

$$\int d\omega = k\int t^{-1/2}\,dt$$

$$\omega = 2\,k\,t^{1/2} + c_1 \qquad \text{..... (II)}$$

$$\frac{d\theta}{dt} = 2\,k\,t^{1/2} + c_1 \quad \Rightarrow \quad d\theta = (2k\,t^{1/2} + c_1)\,dt$$

Integrating both sides, we have

$$\int d\theta = \int (2k\,t^{1/2} + c_1)\,dt$$

$$\theta = \frac{4}{3}k\,t^{3/2} + c_1 t + c_2 \qquad \text{..... (III)}$$

At $t = 0$, $\theta = -4$ rad $\therefore\ c_2 = -4$

$$\theta = \frac{4}{3}k\,t^{3/2} + c_1 t - 4 \qquad \text{..... (IV)}$$

At $t = 1$ s, $\omega = 10$ rad/s from Eq. (II),

$$10 = 2k + c_1 \qquad \text{..... (V)}$$

At $t = 1$, $\theta = \frac{10}{3}$ rad/s from Eq. (IV),

$$\frac{10}{3} = \frac{4}{3}k + c_1 - 4$$

$$10 = k + 3c_1 - 12$$

$$22 = 4k + 3c_1 \qquad \text{..... (VI)}$$

Solving Eqs. (V) and (VI), we get

$c_1 = 2 \quad \therefore\ k = 4$

At $t = 4$ s, from Eq. (IV),

$$\theta = \frac{4}{3} \times 4 \times 4^{3/2} + 2 \times 4 - 4 \quad \therefore\ \theta = 46.67 \text{ rad}$$

From Eq. (II),

$$\omega = 2 \times 4 \times 4^{1/2} + 2 \quad \therefore\ \omega = 18 \text{ rad/s}$$

From Eq. (I),

$$\alpha = 4 \times 4^{-1/2} \quad \therefore\ \alpha = 2 \text{ rad/s}^2$$

Problem 10

A motor gives disk A an angular acceleration of $\alpha_A = (0.6t^2 + 0.75)$ rad/s^2, where t is in seconds. If the initial angular velocity of the disk is $\omega_0 = 6$ rad/s, determine the magnitude of the velocity and acceleration of block B when $t = 2$ s.

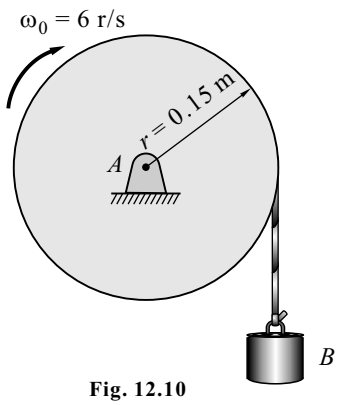

Fig. 12.10

Solution

At $t = 2$ s

$\alpha = 0.6t^2 + 0.75 = 0.6 \times 2^2 + 0.75$

$\alpha = 3.15$ rad/s^2

$a_B = r\alpha = 0.15 \times 3.15$

$a_B = 0.4725$ m/s^2

$\alpha = 0.6t^2 + 0.75$

$$\frac{d\omega}{dt} = 0.6t^2 + 0.75$$

$d\omega = (0.6t^2 + 0.75)\, dt$

Integrating both sides, we have

$$\int d\omega = \int (0.6t^2 + 0.75)\, dt$$

$$\omega = \frac{0.6t^3}{3} + 0.75t + c_1$$

At $t = 0$, $\omega = 6$ rad/s $\therefore c_1 = 6$

$\omega = 0.2\, t^3 + 0.75 \times t + 6$

At $t = 2$ s

$\omega = 0.2 \times 2^3 + 0.75 \times 2 + 6 = 9.1$ rad/s

$v = r\omega$

$v_B = 0.15 \times 9.1 = 1.365$ m/s

Problem 11

Pulley A starts from rest and rotates with a constant angular acceleration of 2 r/s^2 anticlockwise. Pulley A causes double pulley B to rotate without slipping. Block C hangs by a rope wound on B, refer to Fig. 12.11(a). Determine at $t = 3$ sec.

(i) Acceleration, velocity and position of block C.

(ii) Acceleration of point P on pulley B.

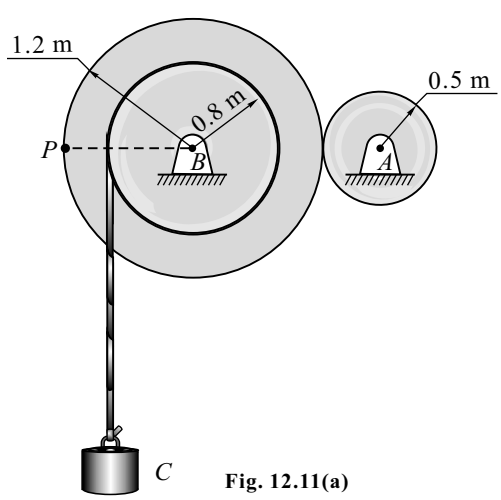

Fig. 12.11(a)

Solution

(i) The common contact point between double pulley B and pulley A will have the following relation:

$$s = r_A \theta_A = r_B \theta_B$$

$$v = r_A \omega_A = r_B \omega_B$$

$$a = r_A \alpha_A = r_B \alpha_B$$

$$\alpha_A = 2 \text{ rad/s}^2, w_0 = 0, \quad t = 3 \text{ sec}$$

$$\omega_A = \omega_0 + \alpha t \qquad \theta_A = \omega_0 t + \frac{1}{2}\alpha t^2$$

$$\omega_A = 0 + 2 \times 3 \qquad \theta_A = 0 + \frac{1}{2} \times 2 \times 3^2$$

$$\omega_A = 6 \text{ rad/s} \qquad \theta_A = 9 \text{ rad}$$

$$\therefore \omega_B = \frac{r_A \omega_A}{r_B} = \frac{0.5 \times 6}{1.2} \qquad \therefore \theta_B = \frac{r_A \theta_A}{r_B} = \frac{0.5 \times 9}{1.2}$$

$$\therefore \omega_B = 2.5 \text{ rad/s} \qquad \therefore \theta_B = 3.75 \text{ rad}$$

$$\therefore \alpha_B = \frac{r_A \alpha_A}{r_B} = \frac{0.5 \times 2}{1.2}$$

$$\therefore \alpha_B = 0.833 \text{ rad/s}^2$$

The common contact point between double pulley B (inner radius 0.8 m) and rope connected to block C will have the following relations:

$$s_C = r_B \theta_B \; ; \qquad v_C = r_B \omega_B \; ; \qquad a_C = r_B \alpha_B$$

$$s_C = 0.8 \times 3.75 \qquad v_C = 0.8 \times 2.5 \qquad a_C = 0.8 \times 0.833$$

$$s_C = 3 \text{ m} \qquad v_C = 2 \text{ m/s} \qquad a_C = 0.67 \text{ m/s}^2$$

(ii) Acceleration of point P

$$a_n = r_B \omega_B^2$$

$$a_n = 1.2 \times 2.5^2$$

$$a_n = 7.5 \text{ m/s}^2$$

$$a_t = r_B \alpha_B$$

$$a_t = 1.2 \times 0.833$$

$$a_t = 1 \text{ m/s}^2$$

$$a = \sqrt{a_t^2 + a_n^2}$$

$$= \sqrt{(1)^2 + (7.5)^2}$$

$$a = 7.566 \text{ m/s}^2 \; (\measuredangle \theta) \qquad \tan\theta = \frac{a_t}{a_n} \qquad \therefore \theta = 7.595^\circ$$

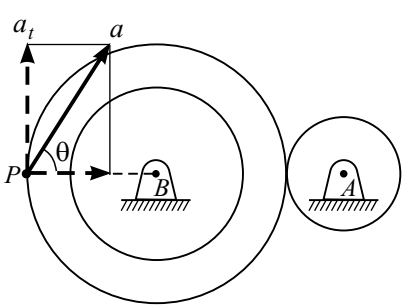

Fig. 12.11(b)

Problem 12

Figure 12.12(a) shows a ladder AB = 6 m resting against a vertical wall at A and horizontal ground at B. If the end B of the ladder is pulled towards right with a constant velocity v_B = 4 m/s. Find

(i) instantaneous centre of rotation of ladder,

(ii) angular velocity of the ladder at the instant,

(iii) velocity v_A of the end A of the ladder, and

(iv) velocity components v_{Cx}, v_{Cy} of mid point C of the ladder.

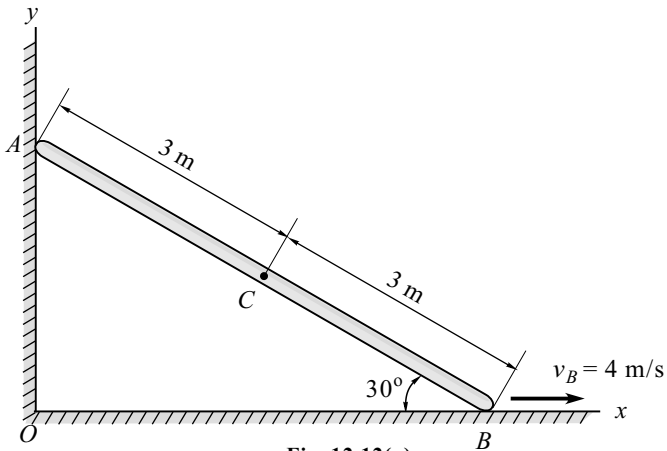

Fig. 12.12(a)

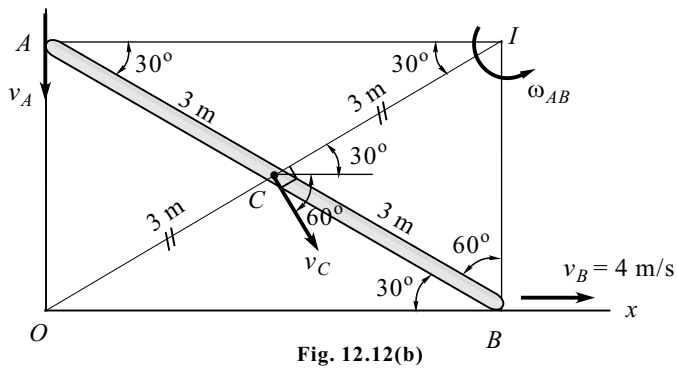

Fig. 12.12(b)

Solution

Refer to Fig. 12.12(b).

Note : *In a rectangle, diagonals are bisectors.*

$IA = 6 \cos 30^\circ$

$IB = 6 \sin 30^\circ$

Ladder *AB* (Performs general plane motion)

At the given instant, point I is the ICR

$v_B = (IB)\,(\omega_{AB})$

$$\omega_{AB} = \frac{4}{6 \sin 30^\circ}$$

$\omega_{AB} = 1.33$ rad/s (↺)

$v_A = (IA)\,\omega_{AB} = 6 \cos 30^\circ \times 1.33 \quad \therefore \; v_A = 6.91$ m/s

$v_C = (IC)\,(\omega_{AB}) = 3 \times 1.33 \quad \therefore \; v_C = 4$ m/s $(\searrow 60^\circ)$

$v_{Cx} = v_C \sin 60^\circ = 4 \cos 60^\circ$

$v_{Cx} = 2$ m/s $(\rightarrow)$

$v_{Cy} = -v_C \sin 60^\circ = -4 \times \sin 60^\circ = -3.464$ m/s

$v_{Cy} = 3.464$ m/s $(\downarrow)$

Problem 13

Figure 12.13(a) below shows a collar B which moves upwards with a constant velocity of 1.5 m/s. At the instant when $\theta = 50^o$, determine **(i)** the angular velocity of rod AB which is pinned at B and freely resting at A against 25° sloping ground, **(ii)** the velocity of end A of the rod, and **(iii)** the velocity of mid point C of rod AB.

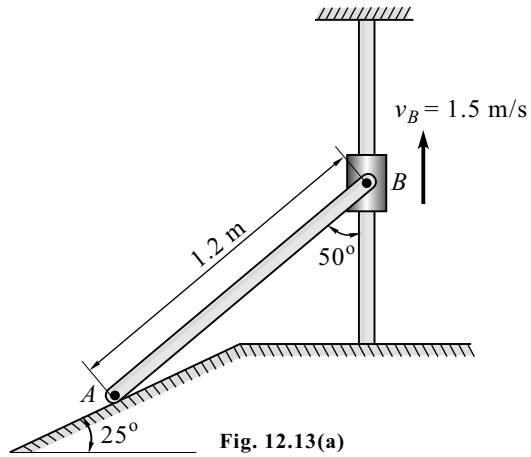

Fig. 12.13(a)

Solution

(i) In $\Delta\, IAB$, using sine rule

$$\frac{1.2}{\sin 65^o} = \frac{IA}{\sin 40^o} = \frac{IB}{\sin 75^o}$$

$\therefore\ IA = 0.851$ m $\quad IB = 1.28$ m

(ii) **Rod *AB*** (Performs general plane motion)

At the given instant point I is the ICR

$v_B = (IB)\,(\omega_{AB})$

$\omega_{AB} = \dfrac{1.5}{1.28}$

$\omega_{AB} = 1.172$ rad/s (↺)

$v_A = (IA)\,(\omega_{AB}) = 0.851 \times 1.172$

$v_A = 1$ m/s $\left(\angle 25^o\right)$

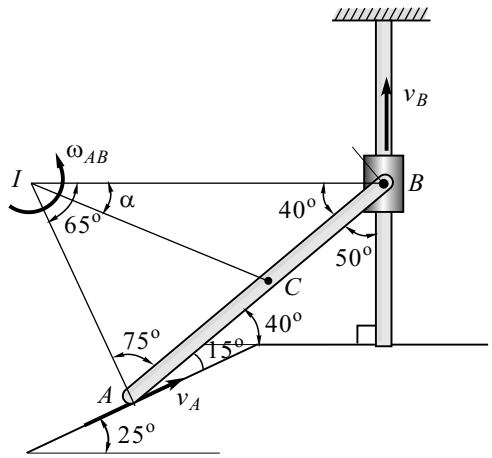

Fig. 12.13(b)

In $\Delta\, ICB$,

$(IC)^2 = (IB)^2 + (CB)^2 - 2(IB)(CB)\cos 40^o = (0.851)^2 + (0.6)^2 - 2(1.28)(0.6)\cos 40^o$

$IC = 0.906$ m

$\therefore\ v_C = (IC)\,\omega_{AB} = (0.906) \times 1.17$

$v_C = 1.06$ m/s

Problem 14

Block D shown in Fig. 12.14(a) moves with a speed of 3 m/s. Determine the angular velocities of links BD and AB and the velocity of point B at the instant shown. Use method of instantaneous centre of zero velocity.

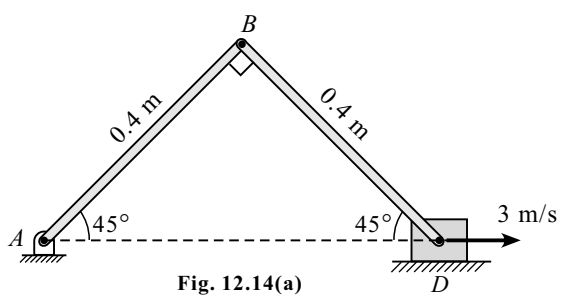

Fig. 12.14(a)

Solution

(i) In $\Delta\, IBD$, by sine rule,

$$\frac{0.4}{\sin 45^o} = \frac{IB}{\sin 45^o} = \frac{ID}{\sin 90^o} \qquad \therefore\ IB = 0.4 \text{ m and } ID = 0.5657 \text{ m}$$

(ii) Consider link *BD*

$v_D = ID \times \omega_{BD}$

$\omega_{BD} = \dfrac{3}{0.5657}$

$\omega_{BD} = 5.303$ rad/s (↺)

$v_B = IB \times \omega_{BD} = 0.4 \times 5.303$

$v_B = 2.121$ m/s $(\searrow 45^\circ)$

(iii) Consider link *AB*

$v_B = AB \times \omega_{AB}$

$\omega_{AB} = \dfrac{2.121}{0.4}$

$\omega_{AB} = 5.303$ rad/s (↻)

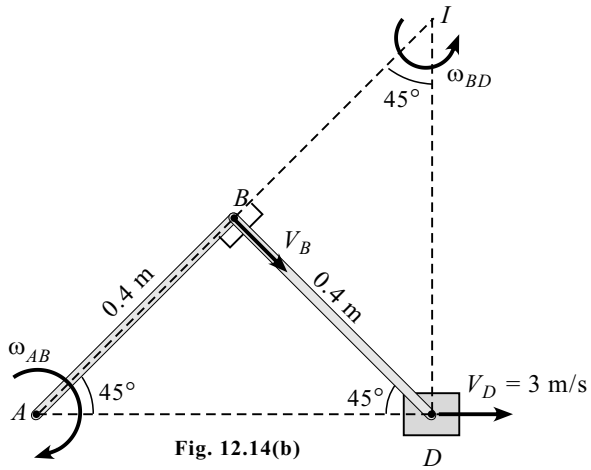

Fig. 12.14(b)

Problem 15

In Fig. 12.15(a), rod *AB* has angular velocity of 2 rad/s, counterclockwise. End *C* of rod *BC* is free to move on a horizontal surface. Determine **(i)** angular velocity of *BC,* and **(ii)** velocity of *C*.

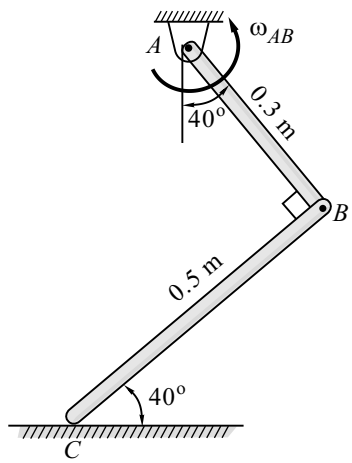

Fig. 12.15(a)

Solution

(i) Using sine rule,

$$\frac{0.5}{\sin 40^\circ} = \frac{IB}{\sin 50^\circ} = \frac{IC}{\sin 90^\circ}$$

$$\therefore\ IB = 0.5 \times \frac{\sin 50^\circ}{\sin 40^\circ} = 0.6 \text{ m}$$

$$\therefore\ IC = 0.5 \times \frac{\sin 90^\circ}{\sin 40^\circ} = 0.78 \text{ m}$$

(ii) Rod *AB* (Performs rotational motion about point *A*)

$v_B = (AB)\,(\omega_{AB}) = 0.3 \times 2 = 0.6$ m/s

Rod *BC* (Performs general plane motion)

At the given instant, point *I* is the ICR.

$v_B = (IB)\,(\omega_{BC})$

$\omega_{BC} = \dfrac{0.6}{0.6}$

$\omega_{BC} = 1$ rad/s (↺)

$v_C = (IC)\,(\omega_{BC}) = 0.78 \times 1$

$v_C = 0.78$ m/s

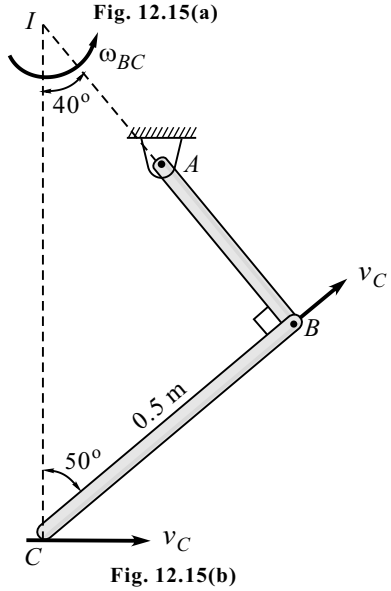

Fig. 12.15(b)

Problem 16

The crank BC of a slider crank mechanism is rotating at constant speed of 30 rpm as shown in Fig. 12.16(a). clockwise. Determine the velocity of the cross head A at the given instant.

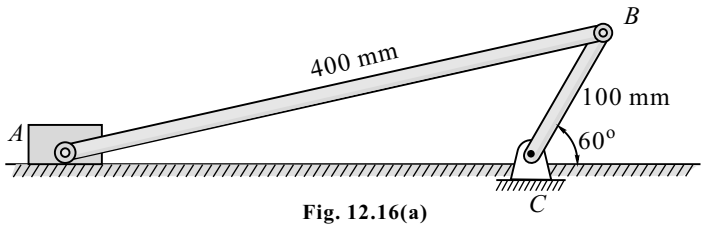

Fig. 12.16(a)

Solution

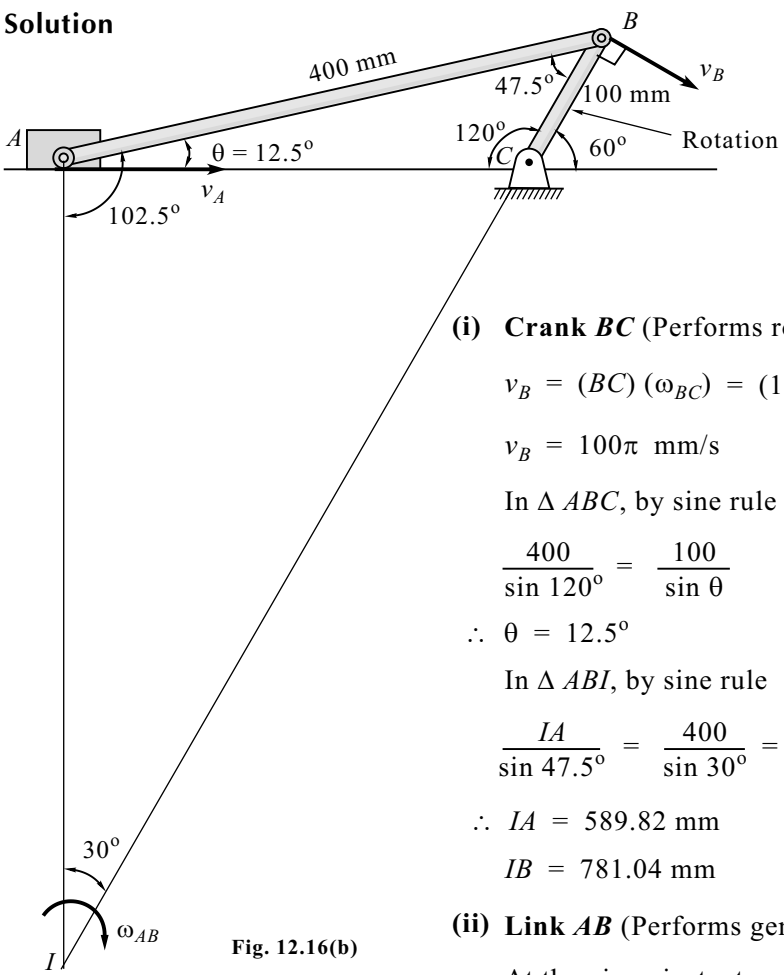

Fig. 12.16(b)

(i) Crank *BC* (Performs rotational motion about point C)

$$v_B = (BC)(\omega_{BC}) = (100)(30)\left(\frac{2\pi}{60}\right)$$

$$v_B = 100\pi \text{ mm/s}$$

In $\Delta\, ABC$, by sine rule

$$\frac{400}{\sin 120^\circ} = \frac{100}{\sin \theta}$$

$$\therefore\ \theta = 12.5^\circ$$

In $\Delta\, ABI$, by sine rule

$$\frac{IA}{\sin 47.5^\circ} = \frac{400}{\sin 30^\circ} = \frac{IB}{\sin 102.5^\circ}$$

$$\therefore\ IA = 589.82 \text{ mm}$$

$$IB = 781.04 \text{ mm}$$

(ii) Link *AB* (Performs general plane motion)

At the given instant point I is the ICR

$$v_B = (IB)(\omega_{AB})$$

$$\omega_{AB} = \frac{100\pi}{781.04}$$

$$\omega_{AB} = 0.402 \text{ rad/s } (\circlearrowleft)$$

$$v_A = (IA)(\omega_{AB}) = 589.82 \times 0.402$$

$$v_A = 237.12 \text{ mm/s}$$

Problem 17

In Fig. 12.17(a), collar C slides on a horizontal rod. In the position shown rod AB is horizontal and has angular velocity of 0.6 rad/s clockwise. Determine angular velocity of BC and velocity of the collar C.

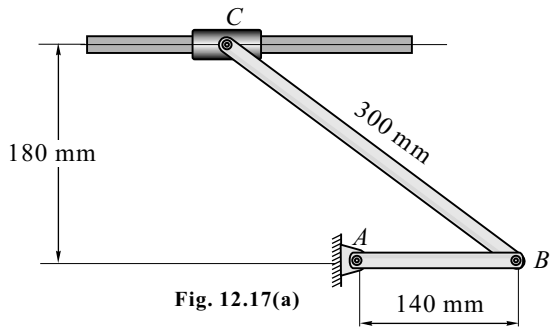

Fig. 12.17(a)

Solution

$$IB = \sqrt{300^2 - 180^2} = 240 \text{ mm}$$

(i) **Rod *AB*** (Performing rotational motion about A)

$$v_B = (AB).\ \omega_{AB} = 140 \times 0.6 = 84 \text{ mm/s}$$

$$\therefore\ v_B = 84 \text{ mm/s } (\downarrow)$$

(ii) **Rod *BC*** (Performs general plane motion)

At the given instant point I is the ICR (Instantaneous centre of rotation)

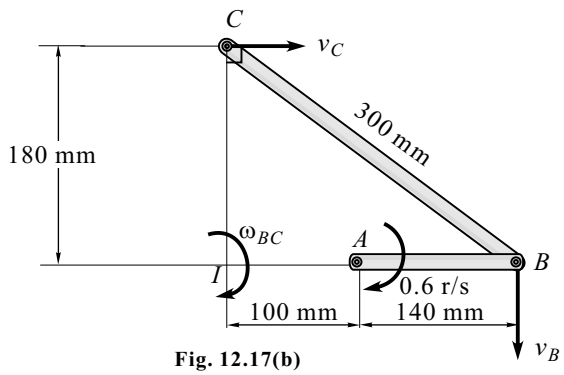

Fig. 12.17(b)

$$v_B = (IB)\ (\omega_{BC})$$

$$\omega_{BC} = \frac{84}{240}$$

$$\omega_{BC} = 0.35 \text{ rad/s. } (\circlearrowright)$$

$$v_C = (IC)\ (\omega_{BC}) = 180 \times 0.35$$

$$v_C = 63 \text{ mm/s } (\leftarrow)$$

Problem 18

A slider crank mechanism is shown in Fig. 12.18(a). The crank OA rotates anticlockwise at 100 rad/s. Find the angular velocity of rod AB and the velocity of the slider at B.

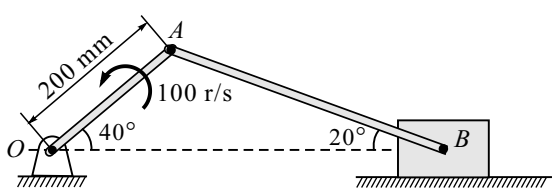

Fig. 12.18(a)

Solution

(i) In $\Delta\ OAB$, by sine rule, we have

$$\frac{0.2}{\sin 20^o} = \frac{AB}{\sin 40^o}$$

$$\therefore\ AB = 0.376 \text{ m}$$

In $\Delta\ IAB$, by sine rule, we have

$$\frac{AB}{\sin 50^o} = \frac{IA}{\sin 70^o} = \frac{IB}{\sin 60^o}$$

$$\therefore\ IA = 0.461 \text{ m}$$

$$\therefore\ IB = 0.425 \text{ m}$$

(ii) Consider Crank *OA*

$v_A = (OA)(\omega_{OA}) = 0.2 \times 100$

$v_A = 20$ m/s (50°)

(iii) Consider Rod *AB*

$v_A = (IA)(\omega_{AB})$

$\omega_{AB} = \dfrac{20}{0.461}$

$\omega_{AB} = 43.38$ rad/s (↻)

$v_B = (IB)(\omega_{AB}) = 0.425 \times 43.38$

$v_B = 18.44$ m/s (→)

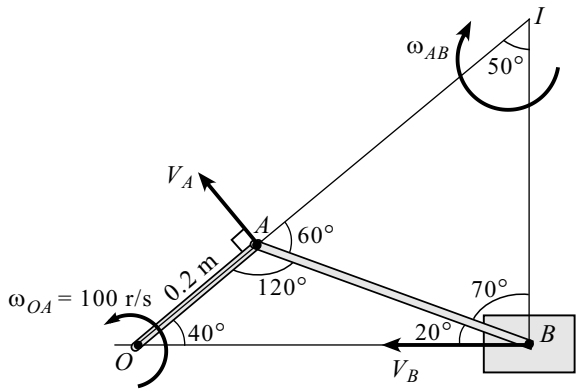

Fig. 12.18(b)

Problem 19

Crank *OA* rotates at 60 r.p.m. in clockwise sense. In the position shown $\theta = 40^\circ$ shown in Fig. 12.19(a), determine angular velocity of *AB* and velocity of *B* which is constrained to move in a horizontal cylinder.

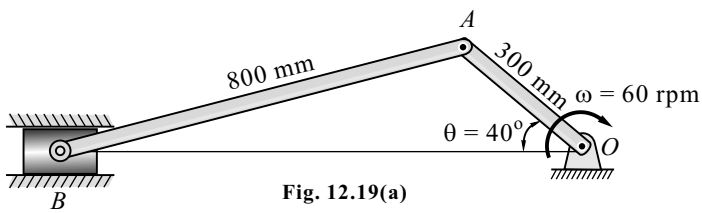

Fig. 12.19(a)

Solution

(i) $\omega_{OA} = 60$ rpm $= 60 \times \dfrac{2\pi}{60}$ rad/s

$\omega_{OA} = 2\pi$ rad/s

$\therefore \sin 40^\circ = \dfrac{h}{300}$

$\therefore h = 300 \times \sin 40^\circ$

$h = 192.84$ mm

$\therefore \sin\theta = \dfrac{h}{800} = \dfrac{192.84}{800}$

$\theta = 13.95^\circ$

Using sine rule, we get

$$\frac{AB}{\sin 50^\circ} = \frac{IA}{\sin 76.05^\circ} = \frac{IB}{\sin 53.95^\circ}$$

$$\frac{800}{\sin 50^\circ} = \frac{IA}{\sin 76.05^\circ} = \frac{IB}{\sin 53.95^\circ}$$

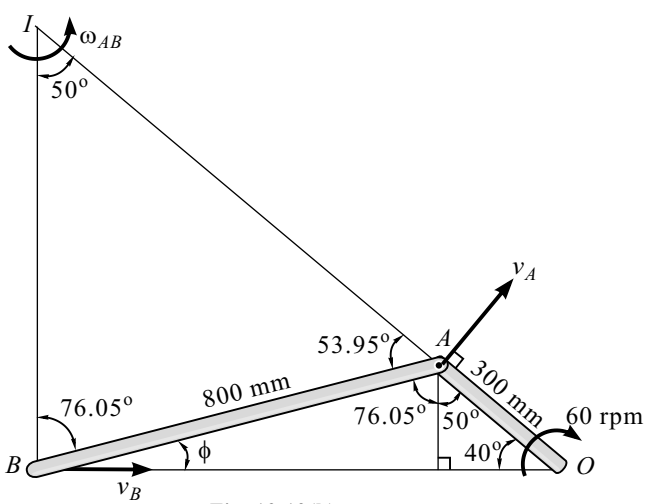

Fig. 12.19(b)

$$\therefore IA = 800 \times \frac{\sin 76.05^\circ}{\sin 50^\circ} = 1013.53 \text{ mm} = 1.04 \text{ m}$$

$$\therefore IB = 800 \times \frac{\sin 53.95^\circ}{\sin 50^\circ} = 844.34 \text{ mm} = 0.844 \text{ m}$$

(ii) Rod *OA* (Performs rotational motion about O)

$v_A = (OA)(\omega_{OA}) = 0.3 \times 2\pi = 1.89$ m/s

(iii) Rod *AB* (Performs general plane motion)

At the given instant point I is the ICR

$v_A = (IA)(\omega_{AB})$

$\omega_{AB} = \dfrac{1.89}{1.04}$

$\omega_{AB} = 1.817$ rad/s (↺)

$v_B = (IB)(\omega_{AB}) = 0.844 \times 1.817$

$v_B = 1.53$ m/s (→)

Problem 20

Locate the instantaneous centre of rotation of link AB. Find also the angular velocity of link OA. Take velocity of slider at B = 2500 mm/s. The link and slider mechanism is as shown in Fig. 12.20(a).

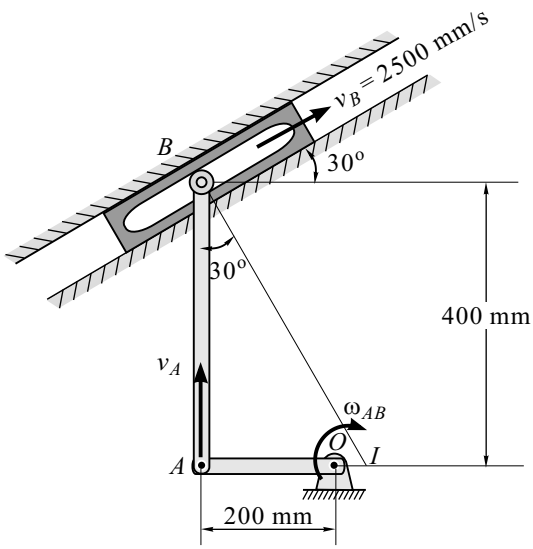

Fig. 12.20(a)

Solution

(i) $\tan 30^\circ = \dfrac{IA}{AB} = \dfrac{IA}{400}$

$\therefore\ IA = 230.94$ mm

$\cos 30^\circ = \dfrac{400}{IB}$

$IB = 461.88$ mm

(ii) Link *AB* (Performs general plane motion)

At the given instant, point I is the ICR.

$v_B = (IB)(\omega_{AB})$

$\omega_{AB} = \dfrac{2500}{461.88}$

$\omega_{AB} = 5.413$ rad/s (↻)

(iii) Link *OA* (Performs rotational motion about point O)

$v_A = (OA)(\omega_{OA})$

$1250 = 200\,(\omega_{OA})$

$\omega_{OA} = 6.25$ rad/s (↻)

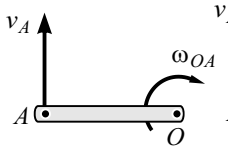

Fig. 12.20(b) : Link *OA* alone

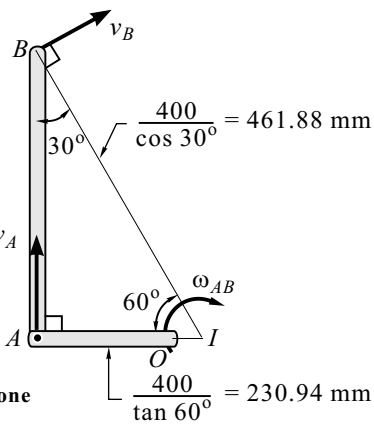

Fig. 12.20(c) : Link *AB* alone

Problem 21

In the mechanism shown in Fig. 12.21(a), rod AB is horizontal, CD is vertical. End A is guided in an inclined slot having slope 3 in 4. If velocity of A is 1.2 m/sec up the slot. Determine **(i)** angular velocity of AB and CD, and **(ii)** liner velocity of B.

Given AD = 450 mm, BD = 300 mm, CD = 360 mm, v_A = 1.2 m/s.

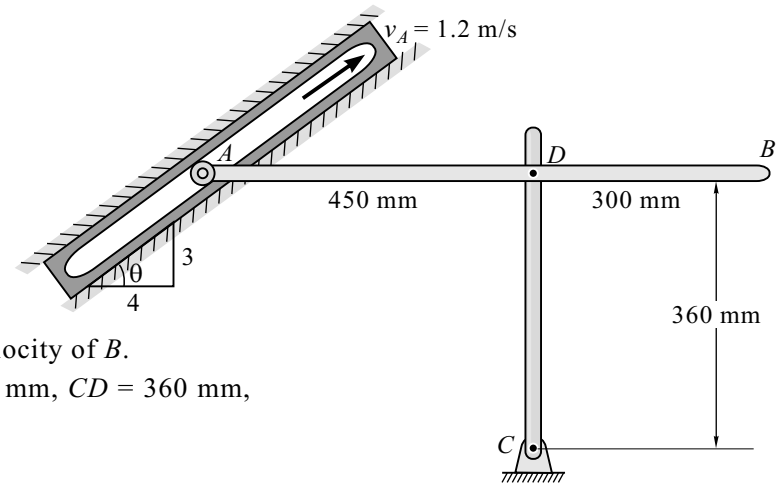

Fig. 12.21(a)

Solution

(i) $\tan\theta = \dfrac{3}{4}$

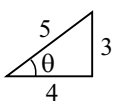

$$\frac{AD}{ID} = \tan\theta \qquad \therefore \frac{450}{ID} = \frac{3}{4} \qquad \therefore ID = 600 \text{ mm} = 0.6 \text{ m}$$

$$\sin\theta = \frac{AD}{IA} \qquad \therefore \frac{3}{5} = \frac{450}{IA} \qquad \therefore IA = 750 \text{ mm} = 0.75 \text{ m}$$

$$(IB)^2 = (ID)^2 + (DB)^2 = (600)^2 + (300)^2$$

$$\therefore IB = 670.82 \text{ mm} = 0.67082 \text{ m}$$

(ii) **Rod *AB*** (Performs general plane motion)

$$v_A = (IA)\,(\omega_{AB})$$

$$1.2 = (IA).\,\omega_{AB}$$

$$\omega_{AB} = \frac{1.2}{0.75}$$

$$\omega_{AB} = 1.6 \text{ rad/s } (\circlearrowright)$$

$$\therefore v_D = (ID)\,(W_{AB}) = 0.6 \times 1.6$$

$$v_D = 0.96 \text{ m/s } (\rightarrow)$$

$$v_B = (IB)\,(\omega_{AB}) = (IB) \times 1.6 = (0.67082) \times 1.6$$

$$v_B = 1.073 \text{ m/s}$$

(iii) **Rod *CD*** (Performs rotational motion about point C)

$$\therefore v_D = (CD)\,(\omega_{CD})$$

$$0.96 = 0.360 \times \omega_{CD}$$

$$\omega_{CD} = 2.67 \text{ rad/s } (\circlearrowright)$$

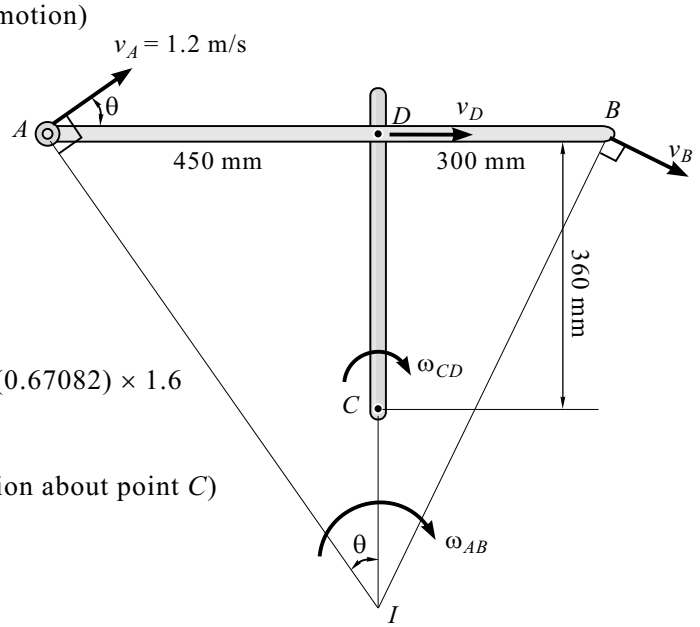

Fig. 12.21(b)

Problem 22

At the position shown in Fig. 12.22(a), the crank *AB* has angular velocity of 3 rad/s clockwise. Find the velocity of slider *C* and the point *D* at the instant shown.

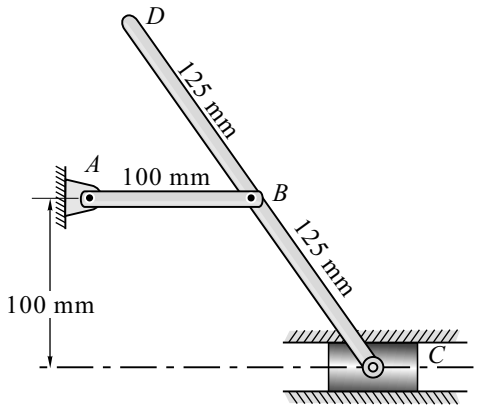

Fig. 12.22(a)

Solution

(i) **Crank *AB*** (Performs rotational motion about point *A*)

$v_B = (AB)\,(\omega_{AB}) = 100 \times 3$

$v_B = 300$ mm/s (↓)

In Δ *IBC,*

$(BC)^2 = (IB)^2 + (IC)^2$

$(IB)^2 = (BC)^2 - (IC)^2 = 125^2 - 100^2$

$IB = 75$ mm

$IC = 100$ mm

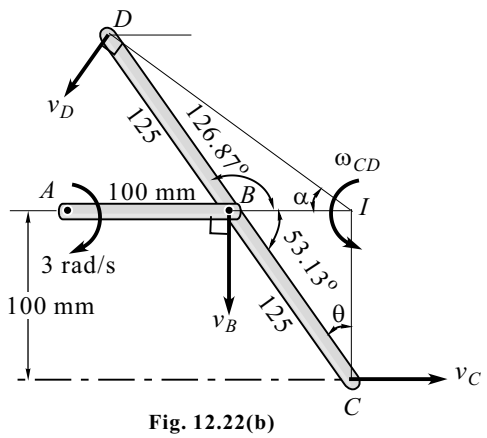

Fig. 12.22(b)

(ii) **Rod *CD*** (Performs general plane motion)

At the given instant, point *I* is the ICR.

$v_B = (IB)\,\omega_{CD}$

$\omega_{CD} = \dfrac{300}{75}$

$\omega_{CD} = 4$ rad/s (↺)

(iii) To get velocity of *D*, we need *ID*

By cosine rule,

$(ID)^2 = (IC)^2 + (CD)^2 - 2(IC)\,(CD)\cos 36.87^\circ$

$\theta = \tan^{-2}\left(\dfrac{IB}{IC}\right) = \tan^{-1}\left(\dfrac{75}{100}\right) = 36.87^\circ$

$(ID)^2 = 100^2 + 250^2 - 2(100)\,(250)\cdot\cos 36.87^\circ$

$ID = 180.28$ mm

$v_D = (ID)\,(\omega_{CD}) = 180 \times 4$

$v_D = 720$ mm/s

In Δ *DBI*,

$\dfrac{125}{\sin\alpha} = \dfrac{ID}{\sin 126.87^\circ}$

$\sin\alpha = \dfrac{125}{180.28 \times \sin 126.87^\circ}$

$\alpha = 33.690^\circ$

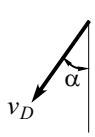

Problem 23

A bar AB, 24 cm long, is hinged to a wall at A as shown in Fig. 12.23(a). Another bar CD, 32 cm long is connected to it by a pin at B such that CB = 12 cm and BD = 20 cm. At the instant shown, ($AB \perp CD$) the angular velocities of the bars are ω_{AB} = 4 rad/s and ω_{CD} = 6 rad/s. Determine the linear velocities of C and D. (**Hint:** Bar CD is in plane motion.)

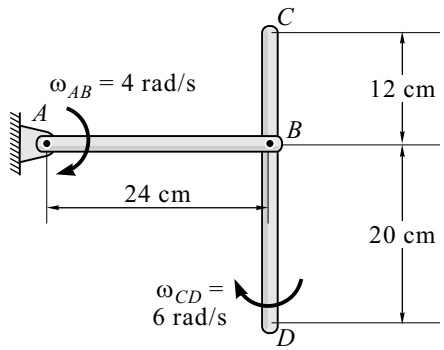

Fig. 12.23(a)

Solution

(i) Rod *AB* (Performs rotational motion about point A)

$\therefore\ v_B = (AB)\,\omega_{AB} = (24)\,(4)$

$v_B = 96$ cm/s (↓)

(ii) Rod *CD* (Performs general plane motion)

Let us assume the point I to be ICR

$v_B = (IB)\,\omega_{CD}$

$IB = \dfrac{96}{6} = 16$ cm

$IC = \sqrt{16^2 + 12^2} = 20$ cm

$v_C = (IC)\,(\omega_{CD}) = 20 \times 6$

$v_C = 120$ cm/s $\left(\nabla\theta\right)$

$v_D = (ID)\,(\omega_{CD}) = \left(\sqrt{16^2 + 20^2}\right)(6)$

$v_D = 153.67$ cm/s $\left(\alpha\right)$

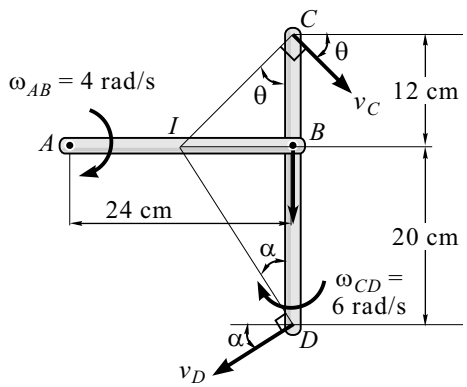

Fig. 12.23(b)

$\tan\theta = \dfrac{16}{12} \quad \therefore\ \theta = 53.13^{\circ}$

$\tan\alpha = \dfrac{16}{12} \quad \therefore\ \alpha = 38.66^{\circ}$

Problem 24

In the device shown in Fig. 12.24(a), find the velocity of point B and angular velocity of both the rods. The wheel is rotating at 2 rad/s anticlockwise.

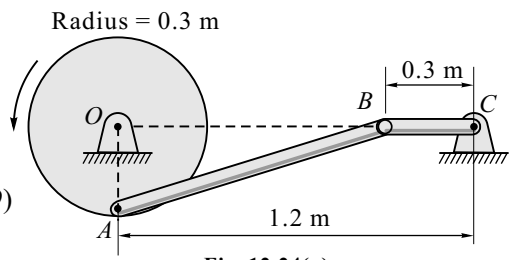

Fig. 12.24(a)

Solution

(i) Wheel (Performs rotational motion about point O)

$v_A = (OA)\,\omega = 0.3 \times 2 \quad \therefore\ v_A = 0.6$ m/s

(ii) Rod *AB* (Performs general plane motion)

Let us assume the point I to be ICR

$IA = 0.3$ m

$IB = 1.2 - 0.3 = 0.9$ m

$v_A = (IA)\,(\omega_{AB})$

$\omega_{AB} = \dfrac{0.6}{0.3} \quad \therefore\ \omega_{AB} = 2$ rad/s (↺)

$v_B = (IB)\,(\omega_{AB}) = 0.9 \times 2 \quad \therefore\ v_B = 1.8$ m/s (↑)

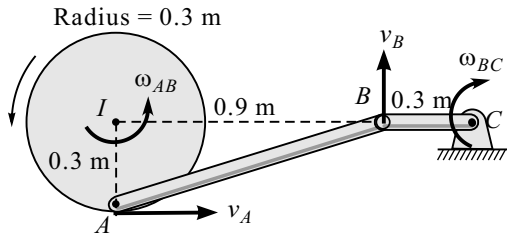

Fig. 12.24(b)

(iii) **Rod *BC*** (Performs rotational motion about point *B*)

$v_B = (BC)\,\omega_{BC}$

$1.8 = 0.3 \times \omega_{BC}$

$\therefore\ \omega_{BC} = 6$ rad/s (↺)

Problem 25

Knowing that at the instant shown in Fig. 12.25(a), the angular velocity of rod *BE* is a 4 rad/s counter-clockwise, determine **(i)** the angular velocity of rod *AD,* and **(ii)** the velocity of collar *D*.

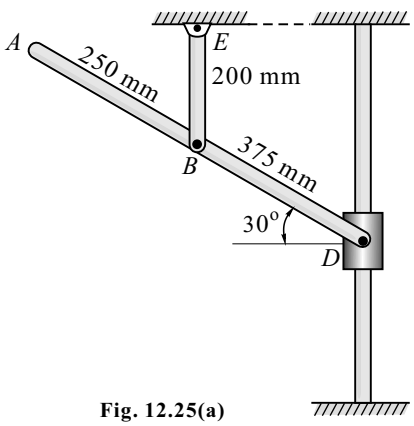

Fig. 12.25(a)

Solution

(i) **Rod *BE*** (Performs rotational motion about point *E*)

$v_B = (BE)\,\omega_{BE} = 0.2 \times 4$

$v_B = 0.8$ m/s (→)

$IB = BD \sin 30^\circ = 0.375 \times \sin 30^\circ$

$IB = 0.1875$ m

$ID = (BD) \cos 30^\circ = 0.375 \times \cos 30^\circ$

$ID = 0.325$ m

$(IA)^2 = (AD)^2 + (ID)^2 - 2(AD)(ID)\cos 30^\circ$

$= (0.625)^2 + (0.325)^2 - 2(0.625)(0.325)\cos 30^\circ$

$IA = 0.38$ m

(ii) **Rod *AD*** (Performs general plane motion)

At the given instant, point *I* is the ICR.

$v_B = (IB)\,(\omega_{AD})$

$\omega_{AD} = \dfrac{0.8}{0.1875}$

$\omega_{AD} = 4.267$ rad/s (↻)

$v_A = (IA)\,(\omega_{AD})$

$v_A = 0.38 \times 4.267 = 1.62$ m/s

$v_D = (ID)\,(\omega_{AD}) = 0.325 \times 4.267$

$v_D = 1.3867$ m/s (↓)

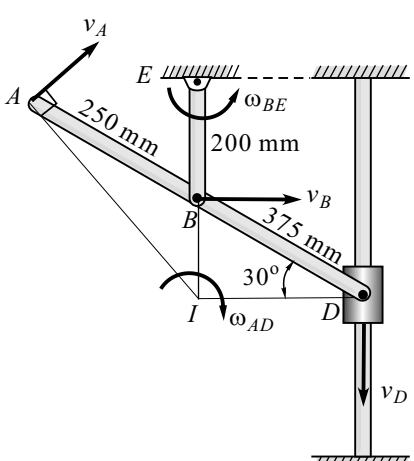

Fig. 12.25(b)

Problem 26

Rod *BDE* is partially guided by a roller at *D* which moves in a vertical track as shown in Fig. 12.16(a). Knowing that at the instant shown the angular velocity of *AB* is 5 rad/s clockwise and β = 25°, determine the **(i)** angular velocity of rod *BE,* and **(ii)** velocity of point *E*.

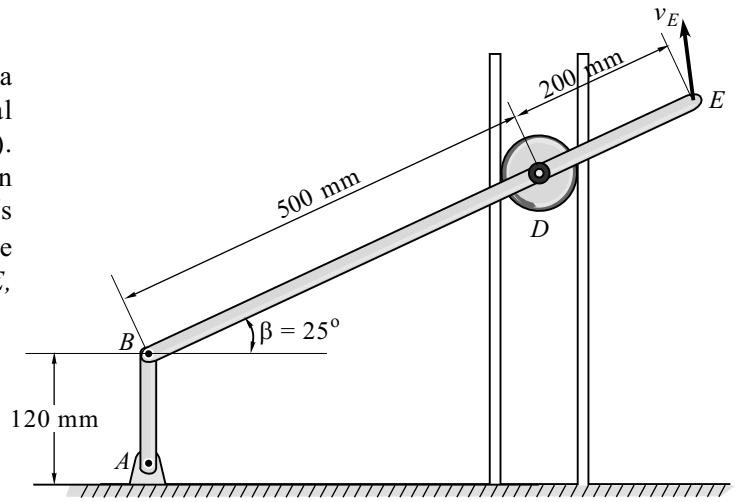

Fig. 12.26(a)

Solution

(i) Rod *AB*

(Performs rotational motion about point *A*)

$v_B = (AB)\,\omega_{AB} = 120 \times 5$

$v_B = 600$ mm/s (→)

$IB = 500 \sin 25^\circ$

$ID = 500 \cos 25^\circ$

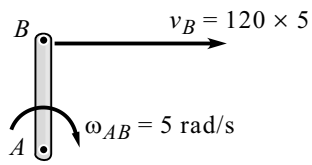

Fig. 12.26(b)

(ii) Rod *BDE* (Performs general plane motion)

At the given instant, point *I* is the ICR.

$v_B = (IB)\,(\omega_{BDE})$

$$\omega_{BDE} = \frac{600}{500 \sin 25^\circ}$$

$\omega_{BDE} = 2.84$ r/s (↺)

$DF = 200 \cos 25^\circ = 181.25$ mm

$ID = 500 \cos 25^\circ = 453.15$ mm

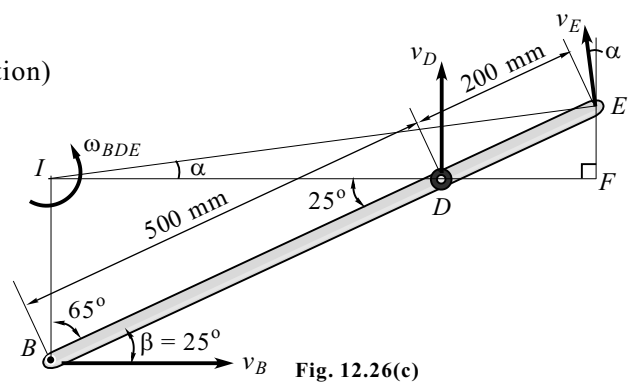

Fig. 12.26(c)

$\therefore\ IF = ID + DF = 453.15 + 181.26$

$= 634.42$ mm

$EF = 200 \sin 25^\circ = 84.524$ mm

$$IE = \sqrt{(IF)^2 + (EF)^2} = \sqrt{(634.42)^2 + (84.524)^2}$$

$= 640.03$ mm

$\therefore\ v_E = (IE)\,\omega_{BDE} = 640.03 \times 2.84$

$v_E = 1817.69$ mm/s

$$\tan\alpha = \frac{EF}{IF} = \frac{84.524}{634.42}$$

$\alpha = 7.59^\circ$

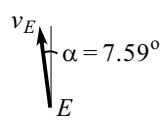

Problem 27

In Fig. 12.27(a), C is constrained to move in a vertical slot. A and B move on horizontal floor. Rod CA and CB are connected with smooth hinges. If v_A = 0.45 m/s to the right. Find velocity of C and B. Also find the angular velocity of the two rods.

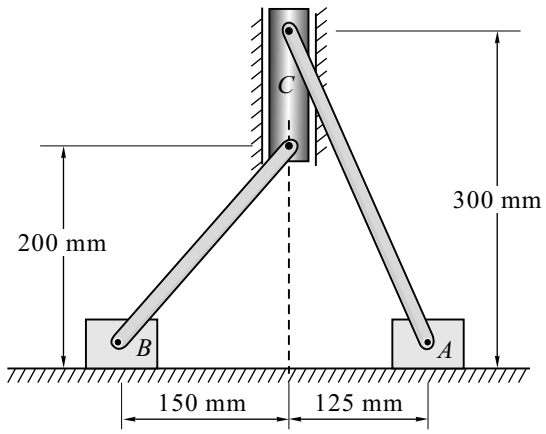

Fig. 12.27(a)

Solution

I_1A = 0.3 m

I_1C = 0.125 m

I_2B = 0.2 m

I_2C = 0.150 m

(i) Rod *AC*

(Performs general plane motion) I_1 (ICR)

$$\frac{v_A}{I_1A} = \frac{v_C}{I_1C} = \omega_{AC}$$

$$\frac{0.45}{0.3} = \frac{v_C}{0.125} = \omega_{AC}$$

$\therefore$ v_C = 0.1875 m/s (↓)

ω_{AC} = 1.5 rad/s (↺)

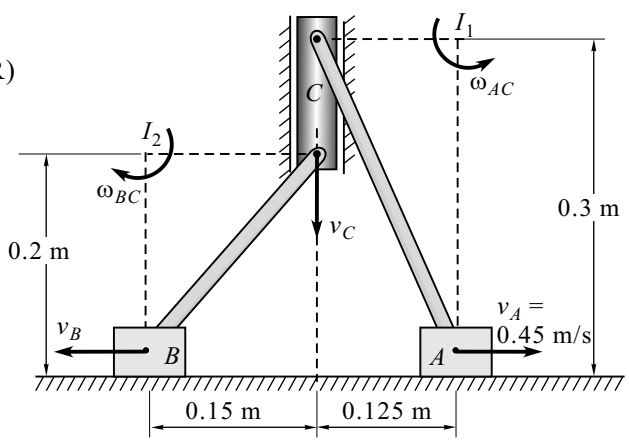

Fig. 12.27(b)

(ii) Rod *BC*

(Performs general plane motion) I_2 (ICR)

$$\frac{v_C}{I_2C} = \frac{v_B}{I_2B} = \omega_{BC}$$

$$\frac{0.1875}{0.150} = \frac{v_B}{0.2} = \omega_{BC}$$

$\therefore$ v_B = 0.25 m/s (←)

ω_{BC} = 1.25 rad/s (↻)

Problem 28

In the mechanism shown in Fig. 12.28, collars A and C slide on horizontal rods while B on a vertical rod. Links AB and BC, each 300 mm long, are hinged to the collars. At the instant shown v_A = 100 mm/sec to the left and $\theta = 70^o$. Find **(i)** the velocity of collars B, and C and **(ii)** the angular velocity of AB and BC.

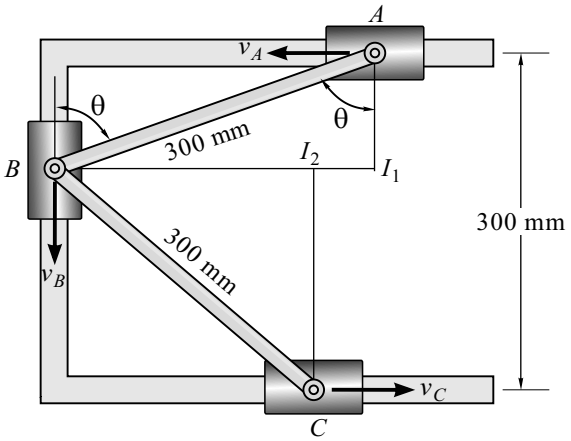

Fig. 12.28

Solution

(i) Drawing lines at right angles to the guided path I_1 is ICR of AB and I_2 is ICR. of BC.

In $\Delta\ ABI$,

$I_1B = (AB)(\sin\theta) = (300)\sin 70^o = 281.91$ mm

$I_1A = 300 \times \cos 70^o = 102.61$ mm

$I_2C = 300 - 102.61 = 197.39$ mm

$I_2B = \sqrt{(300)^2 - (197.39)^2} = 225.914$ mm

(ii) **Link *AB* :** I_1 is ICR

$v_A = (I_1A)(\omega_{AB})$

$100 = (102.61)(\omega_{AB})$

$\omega = 0.9745$ rad/s (↺)

$v_B = (I_1B)(\omega_{AB}) = (281.9) \times 0.9746$

$= (281.9) \times 0.9746$

$v_B = 274.74$ mm/s (↓)

(iii) **Link *BC* :** I_2 is ICR

$v_B = (I_2B)(\omega_{BC})$

$274.74 = (225.914)(\omega_{BC})$

$\therefore\ \omega_{BC} = 1.216$ rad/s (↺)

$\therefore\ v_C = (I_2B)(\omega_{BC})$

$\therefore\ v_C = 197.39 \times 1.216$

$\therefore\ v_C = 240$ mm/s (→)

Problem 29

C is a uniform cylinder to which a rod AB is pinned at A and the other end of the rod B is moving along a vertical wall as shown in Fig. 12.29(a).

If the end B of the rod is moving upward along the wall at a speed of 3.3 m/s, find the angular velocity of the cylinder assuming that the cylinder is rolling without slipping.

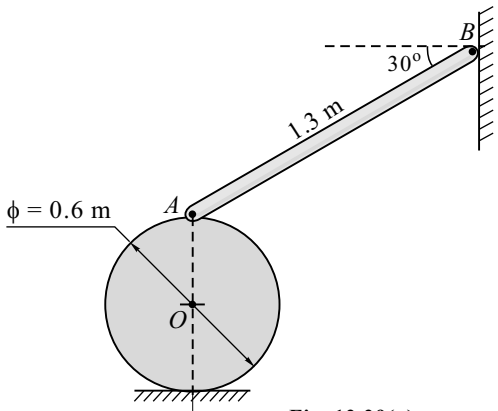

Fig. 12.29(a)

Solution

(i) **Rod *AB*** (Performs general plane motion)

At the given instant point, I_1 is the ICR.

$$v_B = (I_1B)\,(\omega_{AB})$$

$$\omega_{AB} = \frac{3.3}{1.3 \cos 30^\circ}$$

$$\therefore\ \omega_{AB} = 2.931 \text{ rad/s } (\circlearrowleft)$$

$$v_A = (I_1A)\,(\omega_{AB}) = (1.3 \sin 30^\circ) \times (2.931)$$

$$v_A = 1.9$$

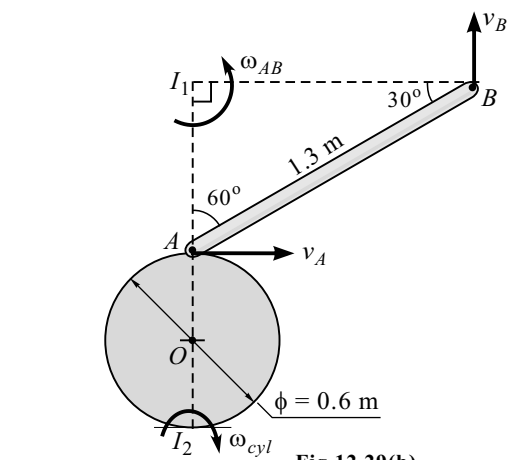

Fig.12.29(b)

(ii) **Cylinder** (Performs general plane motion)

At the given instant point, I_2 is the ICR.

$$v_A = (I_2A)\,(\omega_{cyl.})$$

$$\omega_{cyl.} = \frac{1.9}{0.6}$$

$$\therefore\ \omega_{cyl.} = 3.167 \text{ rad/s } (\circlearrowright)$$

Problem 30

A bar BC slides at C in a collar by 4 m/s velocity as shown in Fig. 12.30(a). The other end B is pinned on a roller. Find angular velocity of bar BC and the roller.

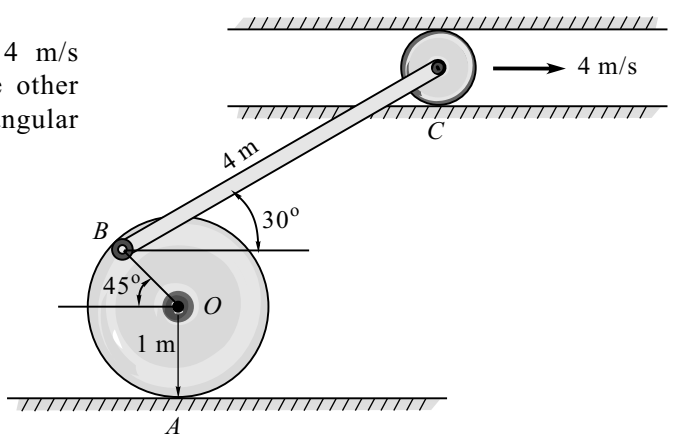

Fig. 12.30(a)

Solution

(i) In $\Delta\, AOB,\ OA = OB$

$$\angle AOB = 90^\circ + 45^\circ = 135^\circ$$

$$2\theta = 180^\circ - 135^\circ = 45^\circ$$

$$\theta = 22.5^\circ$$

$$\therefore\ AB = 2 \cos \theta = 2 \cos 22.5^\circ$$

$$\angle CBI = 97.5^\circ$$

In $\Delta\, ICB$, by sine rule,

$$\frac{4}{\sin 22.5^\circ} = \frac{IC}{\sin 97.5^\circ} = \frac{IB}{\sin 60^\circ}$$

$\therefore\ IC = 10.36$ m

$IB = 9.052$ m

(ii) Bar *BC* (Performs general plane motion)

At the given instant, point I is the ICR.

$v_C = (IC)\,(\omega_{BC})$

$$\omega_{BC} = \frac{4}{10.36}$$

$\omega_{BC} = 0.386$ rad/s (↻)

$v_B = (IB)\,(\omega_{BC}) = 9.052 \times 0.386$

$v_B = 3.494$ m/s

(iii) Roller (Performs general plane motion)

At the given instant, point A is the ICR.

$v_B = (AB)\,(\omega_{roller})$

$$\omega_{roller} = \frac{3.494}{2\cos 22.5^\circ}$$

$\omega_{roller} = 1.891$ rad/s (↻)

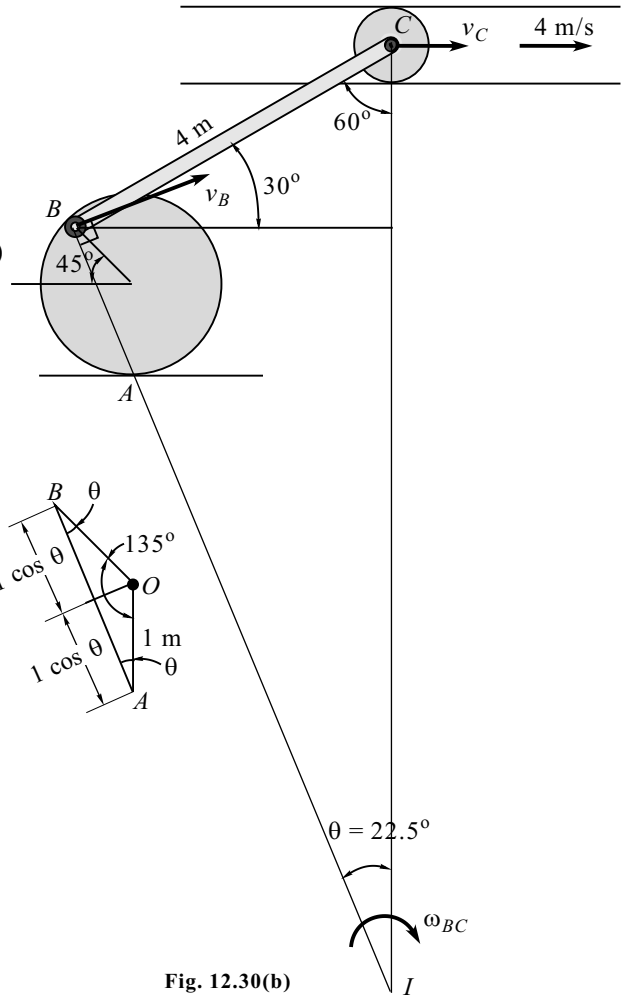

Fig. 12.30(b)

Problem 31

In the position shown in Fig. 12.31(a) rod AB is horizontal and has angular velocity 1.8 rad/sec in clockwise sense. Determine angular velocities of BC and CD.

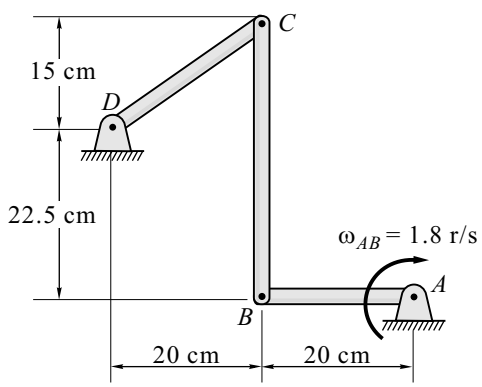

Fig. 12.31(a)

Solution

$$\tan\theta = \frac{15}{20} \qquad \therefore\ \theta = 36.87^\circ$$

$$\tan 36.87^\circ = \frac{BC}{IB} = \frac{37.5}{IB}$$

$\therefore\ IB = 50$ cm

$$IC = \sqrt{(IB)^2 + (BC)^2}$$

$IC = 62.5$ cm

(i) **Rod *AB*** (Performs rotational motion about A)

$v_B = (AB)(\omega_{AB}) = 20 \times 1.8$

$v_B = 36$ cm/s

(ii) **Rod *BC*** (Performs general plane motion)

At the given instant, point I is the ICR.

$v_B = (IB)(\omega_{BC})$

$36 = 50 \times \omega_{BC}$

$\omega_{BC} = 0.72$ rad/s (↺)

$v_C = (IC)(\omega_{BC}) = 62.5 \times 0.72$

$v_C = 45$ cm/s

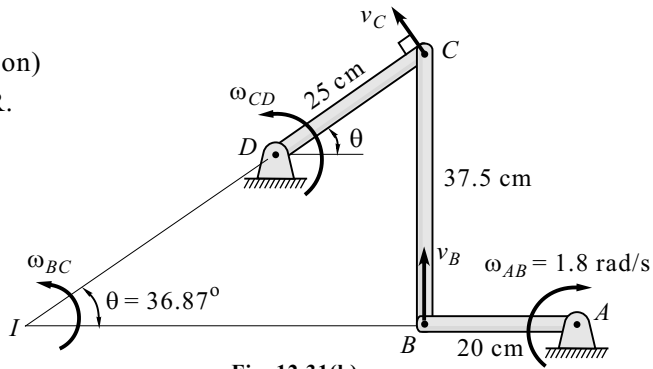

Fig. 12.31(b)

(iii) **Consider Rod *CD***

$v_C = (CD)(\omega_{CD})$

$45 = 25 \times \omega_{CD}$

$\omega_{CD} = 1.8$ rad/s (↺)

Problem 32

In the mechanism shown in Fig. 12.32(a) angular velocity of rod DC is 30° per second. Determine angular velocity of CB and AB.

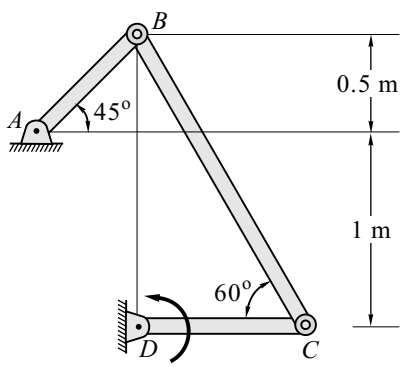

Fig. 12.32(a)

Solution

(i) $\sin 45^o = \dfrac{0.5}{AB}$ $\quad \therefore\ AB = 0.707$ m

$\sin 60^o = \dfrac{1.5}{BC}$ $\quad \therefore\ BC = 1.732$ m

$\tan 60^o = \dfrac{1.5}{CD}$ $\quad \therefore\ CD = 0.87$ m

Using sine rule,

$$\frac{BC}{\sin 45^o} = \frac{IB}{\sin 60^o} = \frac{IC}{\sin 75^o}$$

$$\frac{1.732}{\sin 45^o} = \frac{IB}{\sin 60^o} = \frac{IC}{\sin 75^o}$$

$$1^o = \frac{\pi}{180} \text{ rad}$$

$$\omega_{CD} = 30^o \text{ s} = 30 \times \frac{\pi}{180} \text{ rad/s}$$

$$= \frac{\pi}{6} \text{ rad/s}$$

$$\therefore\ IB = 1.732 \times \frac{\sin 60^o}{\sin 45^o}$$

$$IB = 2.12 \text{ m}$$

$$\therefore\ IC = 1.732 \times \frac{\sin 75^o}{\sin 45^o}$$

$$IC = 2.37 \text{ m}$$

(ii) **Rod *CD*** (Performs rotational motion about point D)

$v_C = (CD)(\omega_{CD}) = 0.87 \times \dfrac{\pi}{6}$

$v_C = 0.46$ m/s

(ii) Rod *BC* (Performs general plane motion)

At the given instant, point I is the ICR.

$v_C = (IC)(\omega_{BC}) \quad \therefore \ \omega_{BC} = \dfrac{0.46}{2.37}$

$\omega_{BC} = 0.194$ rad/s (↺)

$v_B = (IB)(\omega_{BC}) = 2.12 \times 0.194$

$v_B = 0.4112$ m/s

(iii) Rod *AB* (Performs rotational motion about point A)

$v_B = (AB)(\omega_{AB}) \quad \therefore \ \omega_{AB} = \dfrac{0.4113}{0.707}$

$\omega_{AB} = 0.582$ rad/s (↺)

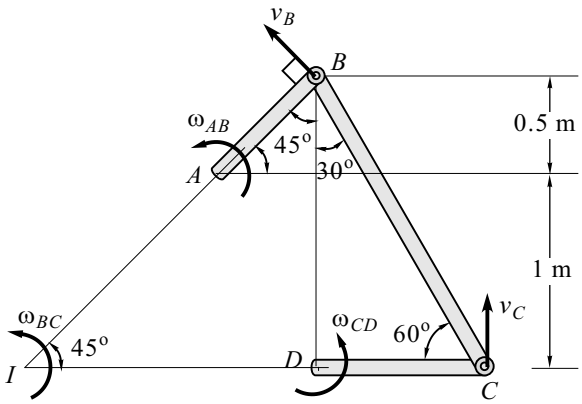

Fig. 12.32(b)

Problem 33

Figure 12.33(a) shows three bars AB, BC and CD hinged together to form a mechanism. If bar CD has angular velocity of 100 rpm in clockwise sense, determine velocities of points B and C. What is the angular velocity of bar AB ?

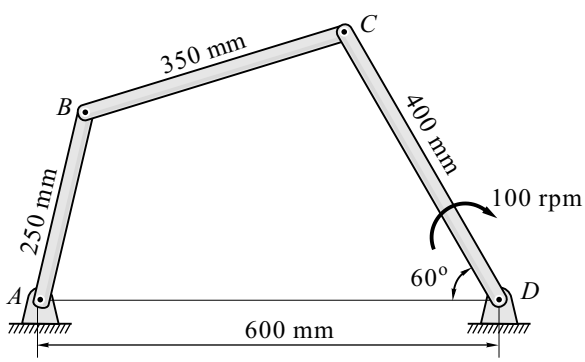

Fig. 12.33(a)

Solution

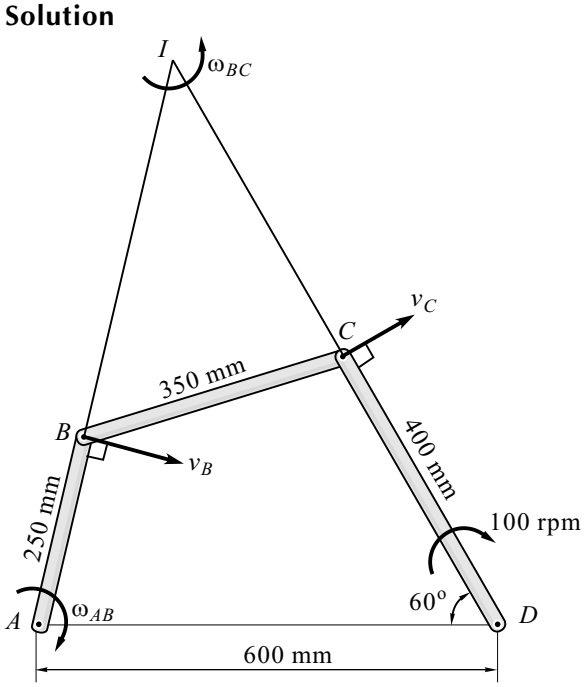

Fig. 12.33(b)

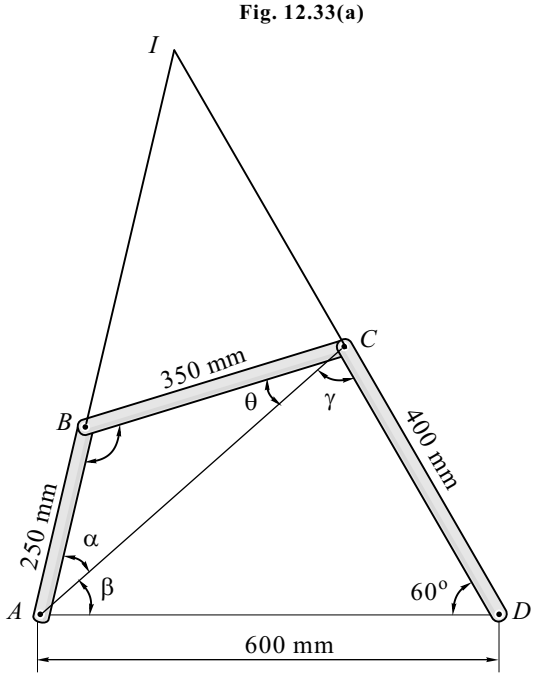

Fig. 12.33(c)

(i) $\cos 60^\circ = \dfrac{0.6^2 + 0.4^2 - AC^2}{2 \times 0.6 \times 0.4}$

$AC = 0.53$ m

$\cos \alpha = \dfrac{0.25^2 + 0.53^2 - 0.35^2}{2(0.25)(0.53)}$

$\alpha = 33.53^\circ$

$\cos \theta = \dfrac{0.35^2 + 0.53^2 - 0.25^2}{2(0.35)(0.53)}$

$\theta = 23.24^\circ$

$\cos \beta = \dfrac{0.6^2 + 0.53^2 - 0.4^2}{2(0.6)(0.53)}$

$\beta = 40.88^\circ$

$\gamma = 180^\circ - (60^\circ + \beta) = 180^\circ - 60^\circ - 40.88^\circ$

$\gamma = 79.12^\circ$

Using sine rule, we get

$$\frac{IB}{\sin 77.64^\circ} = \frac{IC}{\sin 56.77^\circ} = \frac{0.350}{\sin 45.59^\circ}$$

$IB = 0.48$ m

$IC = 0.41$ m

$\omega_{CD} = 100 \times \left(\dfrac{2\pi}{60}\right)$ rad/s

(ii) **Bar *CD*** (Performs rotational motion about point *D*)

$\therefore\ v_C = (CD)\,(\omega_{CD}) = 0.400 \times \left[100 \times \dfrac{2\pi}{60}\right]$

$v_C = 4.189$ m/s (↗) $(\measuredangle 30^\circ)$

(iii) **Rod *BC*** (Performs general plane motion)

At the given instant, point *I* is the ICR.

$v_C = (IC)\,(\omega_{BC})$

$\omega_{BC} = \dfrac{4.189}{0.41}$

$\omega_{BC} = 10.22$ rad/s (↺)

$v_B = (IB)\,(\omega_{BC}) = 0.48 \times 10.22$

$v_B = 4.906$ m/s

(iv) **Rod *AB*** (Performs rotational motion about point *A*)

$v_B = (AB)\,(\omega_{AB})$

$\omega_{AB} = \dfrac{4.906}{0.25}$

$\omega_{AB} = 19.62$ rad/s (↻)

Problem 34

If rod AB is rotating with angular velocity ω_{AB} = 12 rad/s determine the angular velocity of rods BC and CD at the instant shown in Fig. 12.34(a).

Solution

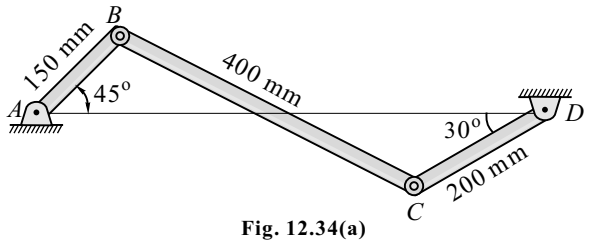

Fig. 12.34(a)

(i) In $\Delta\, ABE$,

$BE = 150 \sin 45^\circ$

In $\Delta\, DCF$,

$CF = 200 \sin 30^\circ = EH$

In $\Delta\, BHC$,

$$\sin\theta = \frac{BH}{400} = \frac{150 \sin 45^\circ + 200 \sin 30^\circ}{400}$$

$\theta = 31^\circ$

Thus, in $\Delta\, IBC$, by sine rule

$$\frac{400}{\sin 15^\circ} = \frac{IB}{\sin 61^\circ} = \frac{IC}{\sin 104^\circ}$$

$IB = 1351.71$ mm

$IC = 1499.57$ mm

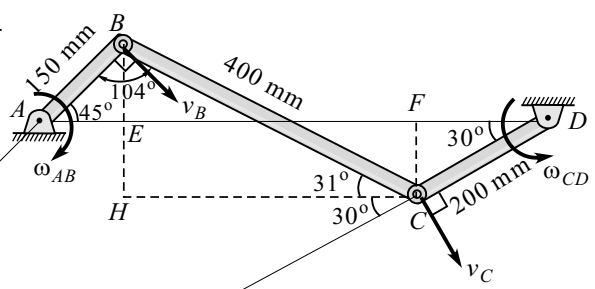

Fig. 12.34(b)

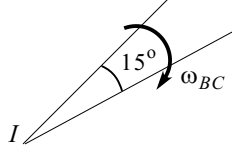

(ii) **Rod *AB*** (Performs rotational motion about point A)

$v_B = (AB)\,(\omega_{AB}) = 150 \times 12$

$v_B = 1800$ mm/s

(iii) **Rod *BC*** (Performs general plane motion)

At the given instant, point I is the ICR.

$v_B = (IB)\,(\omega_{BC})$

$$\omega_{BC} = \frac{1800}{1351.71}$$

$\omega_{BC} = 1.33$ rad/s (↻)

$v_C = (IC)\,(\omega_{BC}) = 1499.57 \times 1.33$

$v_C = 1994.43$ mm/s

(iv) **Rod *CD*** (Performs rotational motion about point *D*)

$v_C = (CD)\,(\omega_{CD})$

$$\omega_{CD} = \frac{1994.43}{200}$$

$\omega_{CD} = 9.972$ rad/s (↺)

Problem 35

Find instantaneous angular velocity of bar *AB* as shown in Fig. 12.35(a).

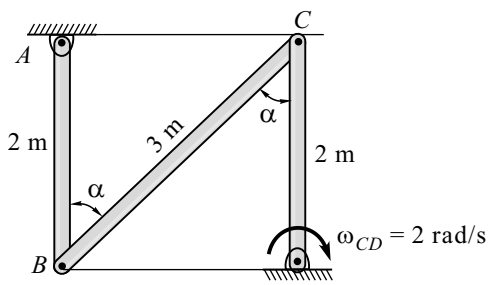

Fig. 12.35(a)

Solution

(i)

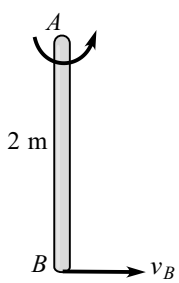

$v_B = (2)\,\omega_{AB}$

$4 = 2 \times \omega_{AB}$

$\omega_{AB} = 2$ rad/s

(ii)

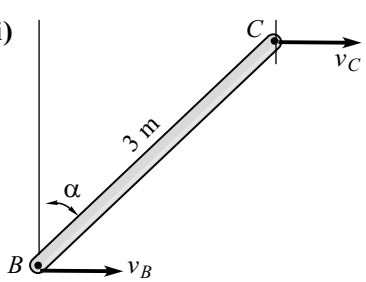

Radius $= \infty$

$$\frac{v_B}{\infty} = \frac{v_C}{\infty} = \omega_{BC}$$

$\omega_{BC} = 0$

BC has no rotation.

(iii)

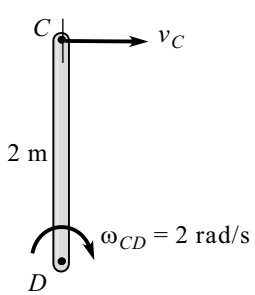

$v_C = 2 \times \omega_{CD} = 2 \times 2$

$v_C = v_B = 4$ m/s

v_C and v_B are parallel and equal.

Problem 36

A roller of 8 cm radius rides between two horizontal bars moving in the opposite directions as shown in Fig. 12.36(a). Locate the instantaneous centre of velocity and give its distance from B. Assume no slip conditions at the points A and B. Locate the position of the instantaneous centre where both the bars are moving in the same direction.

Solution

Roller is performing general plane motion.

At the given instant, point I is the ICR.

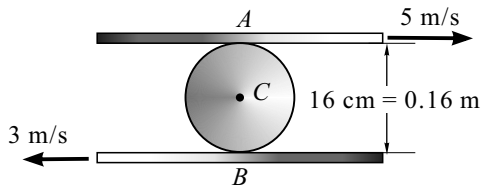

Fig. 12.36(a)

Method I

$$v_A = (IA)\,\omega$$

$$\omega = \frac{5}{0.16 - h} \quad \text{..... (I)}$$

$$v_B = (IB)\,\omega$$

$$\therefore\ \omega = \frac{3}{h} \quad \text{..... (II)}$$

(I) = (II)

$$\frac{5}{0.16 - h} = \frac{3}{h}$$

$$5h = 3(0.16 - h)$$

$$5h = 0.48 - 3h$$

$$8h = 0.48$$

$$h = 0.06 \text{ m}$$

$$IB = 0.06 \text{ m}$$

Method II

$$\frac{v_A}{IA} = \frac{v_B}{IB}$$

$$\frac{5}{IA} = \frac{3}{IB}$$

$$\therefore\ 5IB = 3IA \quad \text{..... (I)}$$

$$\therefore\ IB = \frac{3}{5}\,IA$$

$$\therefore\ IA + IB = 0.16$$

$$\therefore\ IA + \left(\frac{3}{5}IA\right) = 0.16$$

$$\therefore\ IA = 0.1 \text{ m}$$

$$\therefore\ IB = \frac{3 \times 0.1}{5}$$

$$IB = 0.06 \text{ m}$$

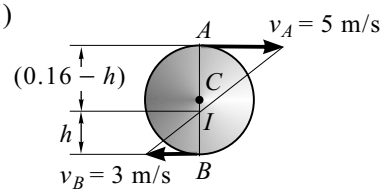

Fig. 12.36(b)

Method I

$$v_A = (IA)\,\omega$$

$$\omega = \frac{5}{(h + 0.16)} \quad \text{..... (I)}$$

$$v_B = (IB)\,\omega$$

$$\therefore\ \omega = \frac{3}{h} \quad \text{..... (II)}$$

(I) = (II)

$$\frac{5}{h + 0.16} = \frac{3}{h}$$

$$5h = 3(h + 0.16)$$

$$5h - 3h = 0.48$$

$$2h = 0.48$$

$$h = 0.24 \text{ m}$$

$$IB = 0.24 \text{ m}$$

Method II

$$\frac{v_A}{IA} = \frac{v_B}{IB}$$

$$\therefore\ \frac{5}{IA} = \frac{3}{IB}$$

$$\therefore\ IB = \frac{3}{5}\,IA$$

But

$$IA - IB = 16$$

$$\therefore\ IA - \left(\frac{3}{5}\,IA\right) = 0.16$$

$$IA = 0.4 \text{ m}$$

$$IB = 0.24 \text{ m}$$

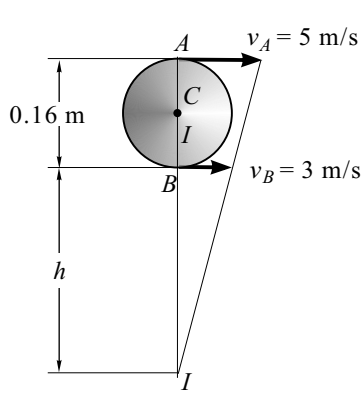

Fig. 12.36(c)

Problem 37

A 25 m long rod AB is placed in a parabolic drum as shown in Fig. 12.37(a). End A of the rod slides rightwards with 41 m/s. Find velocity of end B and angular velocity of the rod at the given instant.

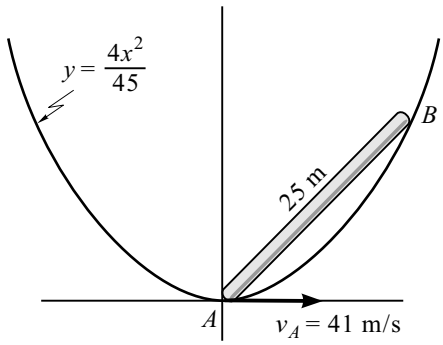

Fig. 12.37(a)

Solution

(i) $x^2 + y^2 = 25^2$ and $y = \frac{4x^2}{45}$ $\therefore$ $x^2 = \frac{45}{4}y$

$\therefore \left(\frac{45}{4}\right) y + y^2 = 25^2$

$45y + 4y^2 = 2500$

$4y^2 + 45y - 2500 = 0$

$\therefore y = 20$ m $\quad \therefore x = 15$ m

We have, $y = \frac{4x^2}{45}$

$\frac{dy}{dx} = \frac{8x}{45}$

$\left(\frac{dy}{dx}\right)_{(15,\,20)} = \frac{8(15)}{45}$

$\therefore \tan\phi = \frac{8}{3}$

$\therefore \phi = 69.44^\circ$

$\therefore \tan\alpha = \frac{y}{x} = \frac{20}{15}$

$\alpha = 53.13^\circ$

In $\Delta\, IAB$,

$$\frac{25}{\sin 69.44^\circ} = \frac{IA}{\sin 73.69^\circ} = \frac{IB}{\sin 36.87^\circ}$$

$\therefore IA = 25.62$ m and $IB = 16.02$ m

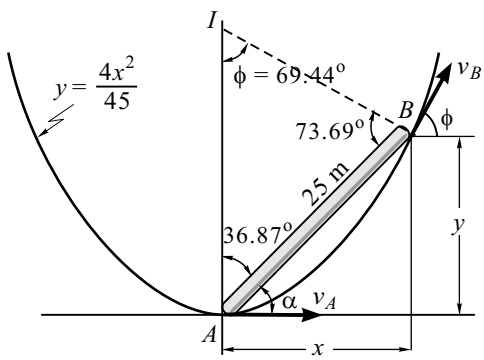

Fig. 12.37(b)

(ii) **Rod *AB*** (Performs general plane motion)

At the given instant, point I is the ICR.

$v_A = (IA)\,(\omega_{AB})$

$\omega_{AB} = \frac{41}{25.62}$

$\omega_{AB} = 1.6$ rad/s (↺)

$v_B = (IB)\,(\omega_{AB}) = 16.02 \times 1.6$

$v_B = 25.63$ m/s $\left(\angle 69.44^\circ\right)$

SUMMARY

- **Angular Displacement (θ - theta) :** If θ_1 is the angular position of the body in position 1 and it changes to θ_2 at position 2, then angular displacement of the body θ is given as

  Angular displacement = Final angular position – Initial angular position

- **Angular Velocity (ω - omega) :** The rate of change of angular position with respect to time is called the angular velocity of the rotating body.
- **Angular Acceleration (α - alpha) :** The rate of change of angular velocity with respect to time is called the angular acceleration of the rotating body.
- **Comparison Between Translational and Rotational Motion**

Translational Motion	Rotational Motion
$v = u + at$	$\omega = \omega_0 + \alpha t$
$s = ut + \frac{1}{2}at^2$	$\theta = \omega_0 t + \frac{1}{2}\alpha t^2$
$v^2 = u^2 + 2as$	$\omega^2 = \omega_0^2 + 2\alpha\theta$
$v = \frac{ds}{dt}$	$\omega = \frac{d\theta}{dt}$
$a = \frac{dv}{dt} = v\frac{dv}{ds}$	$\alpha = \frac{d\omega}{dt} = \omega\frac{d\omega}{d\theta}$

- **General Plane Motion :** It is the combination of translation motion and rotational motion happening simultaneously.

- **How can you identify General Plane Motion?**

  In this example, we have rod *AB* slipping against vertical wall and horizontal floor. *AB* is the one position after some next instant *A'B'* is another position. Here we observe that the rod had shifted its position, means there is translation motion involved, also the angle of rod had changed means there is rotational motion. This is happening simultaneously. Therefore, the rod is performing general plane motion.

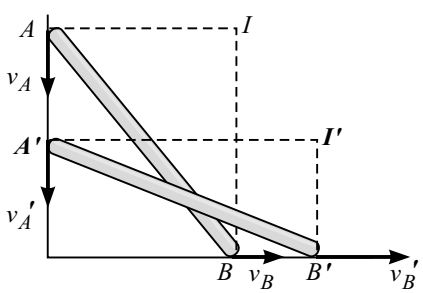

- **Rolling of a Body Without Slipping :** A rolling body is performing general phase motion. If a body is rolling without slipping on stationary surface then the point of contact with stationary surface is the Instantaneous Centre of Rotation (ICR).

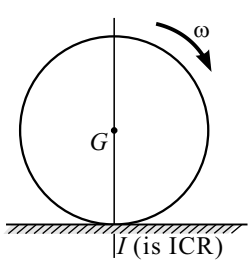

EXERCISES

[I] Problems

1. A wheel has an initial clockwise angular velocity 8 rad/s and a constant angular acceleration of 2 rad/s^2. Determine the number of revolutions the wheel must undergo to acquire a clockwise angular velocity of 15 rad/s. What time is required?

[***Ans.*** n = 6.41 rev. and t = 3.5 s]

2. A wheel accelerates uniformly from rest to a speed of 200 rpm in 1/2 s. It then rotates at that speed for 2 s before decelerating to rest in 1/3 s. How many revolutions does it make during the entire time interval?

[***Ans.*** 8.06 rev.]

3. The angular displacement of a rotating can is defined by the relation $\theta = t^3 - 3t^2 + 6$ where θ is expressed in radians, determine the angular displacement, angular velocity and angular acceleration of the can when t = 3 s.

[***Ans.*** 6 rad, 9 rad/s and 12 rad/s^2]

4. A small grinding wheel is run by electric motor with a rated speed of 3000 r.p.m. When the power is put on the motor reaches its rated speed in 4 s and when the power is put off the unit comes to rest in 60 s. Assuming uniform acceleration and uniform retardation determine **(a)** the angular acceleration of the wheel, **(b)** the angular retardation of the wheel, and **(c)** the total number of revolutions made by the wheel in reaching its rated speed and in coming to rest.

[***Ans.*** (a) α = 78.54 rad/s^2, (b) α = –5.236 rad/s^2, (c) n = 1000 rev. and n = 1500 rev.]

5. The relation of the rigid body is defined as follows where θ is angular displacement in radians and t in seconds : **(a)** $\theta = 3t^2 - 2t$ **(b)** $\theta = t^3 - 1.5t^2$, and **(c)** $\theta = 2 \sin(\pi t/4)$. Determine angular velocity and acceleration in each case at t = 2 s.

[***Ans.*** **(a)** ω = 10 rad/s, α = 6 rad/s^2, **(b)** ω = 6 rad/s, α = 9 rad/s^2
(c) ω = 0, $\alpha = -\pi^2/8$ rad/s^2]

6. The rotation of the rigid body is defined as follows:

(a) $\phi = 3t^2 - 2t$ **(b)** $\phi = 2 \sin(\pi t/4)$

where ϕ is the displacement in radians and t is in seconds.

Determine angular velocity and acceleration in each case after 2 seconds.

[***Ans.*** **(a)** ω = 10 rad/s, α = 6 rad/s^2 **(b)** ω = 0, $\alpha = -\pi^2/8$ rad/s^2]

7. The motion of a flywheel around its geometrical axis is described by the equation :

$\omega = 15t^2 + 3t + 2$ rad/s and angular displacement is 160 radians at t = 3 s. Find the angular acceleration, velocity and displacement at t = 1 s.

[***Ans.*** θ = 14 rad. ω = 20 rad/s and α = 33 rad/s^2]

8. A flywheel has its angular speed increased from 20 rad/s to 75 rad/s in 100 s. If the diameter of the wheel is 2 m, determine the normal and tangential components of the displacement of the point during this time period.

[***Ans.*** $a_t = 0.55$ m/s^2, $a_n = 5625$ m/s^2, $\theta = 4750$ rad]

9. The relation between the angle of rotation and time in case of a rotating wheel is given by the equation $\theta = 2t + 2t^2 + 10$ radians, where t is in seconds. Determine the angular displacement, velocity and acceleration wheel at $t = 4$ s and state whether the acceleration is constant.

[***Ans.*** $\theta = 170$ rad, $\omega = 112$ rad/s and $\alpha = 52$ rad/s^2, not constant]

10. The angular acceleration of a flywheel of 0.6 m diameter, rotating about its centroidal axis is given by $\alpha = \theta/4$ rad/s^2 where θ is in radians. Determine the magnitude of the velocity and magnitude of resultant acceleration of a point on the rim of the flywheel at $\theta = 2$ rad.

[***Ans.*** 0.3 m/s and 0.3354 m/s^2]

11. A body rotates according to the relation $\alpha = 3t^2 + 4$, angular displacement being measured in radians and in seconds. If it starts from rest and has an initial angular velocity of 4 rads determine the values of angular displacement and angular velocities when **(a)** $t = 2$ s, and **(b)** $t = 3$ s.

[***Ans.*** **(a)** $\theta = 20$ rad, $\omega = 20$ rad/s **(b)** $\theta = 50.25$ rad, $\omega = 43$ rad/s]

12. A radial line OA shown in Fig. 12.E12 has its position given by $\theta = (2t^3 - t^2 + 5)$ rad. Determine the x and y components of velocity and acceleration vectors of point A at time $t = 5$ s. Take radius of the wheel as 0.3 m.

[***Ans.*** $\boldsymbol{v_A} = 25.9\,\boldsymbol{i} - 33.1\,\boldsymbol{j}$ and $\boldsymbol{a_A} = 4644\,\boldsymbol{i} + 3606\,\boldsymbol{j}$]

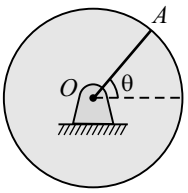

Fig. 12.E12

13. The sprockets of a chain drive shown in Fig. 12.E13 have radius $r_1 = 50$ mm and $r_2 = 100$ mm. The small sprocket is designed to reach a speed of 100 r.p.m. in time $t = 7$ s. Determine the required angular acceleration of the large sprocket and the total number of revolutions of both wheels during the acceleration period.

[***Ans.*** $\alpha_2 = 18.18$ rad/s^2,
$n_1 = 5.85$ rev and $n_2 = 2.92$ rev.]

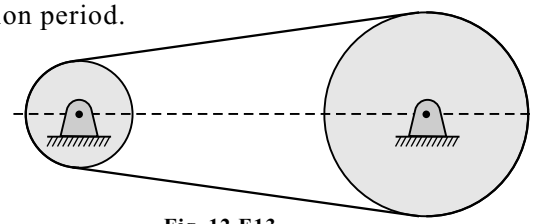

Fig. 12.E13

14. A pulley and two loads are connected by inextensible cords as shown in Fig. 12.E14. Load A has a constant acceleration of 0.3 m/s^2 and initial velocity of 0.24 m/s both directed upwards. Determine **(a)** the number of revolutions executed by the pulley in 4 s, **(b)** the velocity and the displacement of load B after 4 s and **(c)** the acceleration of point D on the rim of the pulley at $t = 0$.

[***Ans.*** **(a)** n = 4.456 rev, **(b)** v_B = 2.16 m/s, s_B = 5.04 m and **(c)** a_D = 0.849 m/s^2]

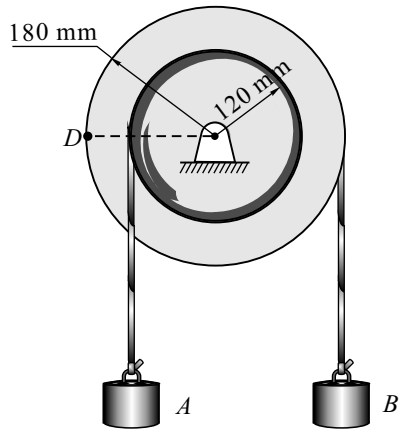

Fig. 12.E14

15. A hoisting mechanism consists of a wheel A (r = 100 cm), gear B (r = 50 cm) which is firmly attached to wheel A and pinion gear C (r = 10 cm) which drives gear B as shown in Fig. 12.E15. The maximum allowed vertical acceleration of load is 5 m/s^2. Its maximum speed is 8 m/s. Determine the maximum angular speed and angular acceleration of gear C and the number of revolutions in which it reaches the maximum speed starting from rest.

[***Ans.*** ω_C = 40 rad/s, α_C = 25 rad/s^2 and n = 5.09 rev.]

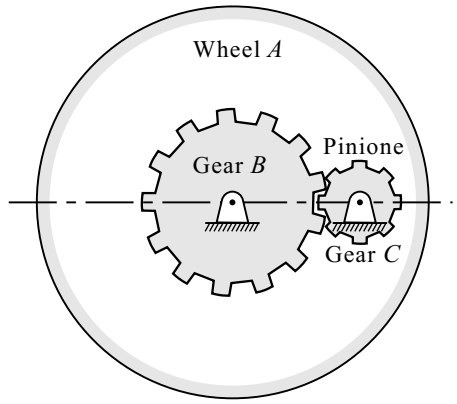

Fig. 12.E15

16. A 50 cm long straight rod AB, has one end B moving with a velocity of 4 m/s, and the other end A moving along a vertical line YO as shown in Fig. 12.E16. Find the velocity of the end A and of the midpoint of the rod when it is inclined at 60° with the horizontal.

[***Ans.*** v_A = 2.309 m/s and v_{mid} = 2.309 m/s]

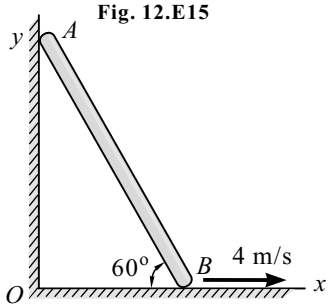

Fig. 12.E16

17. The link ABC shown in Fig. 12.E17 is guided by two blocks at A and B, which moves in, fixed slots. At the instant shown in Fig. 12.E17, the velocity of A is 2 m/s downwards. Determine the

(a) velocity of B at this instant, and

(b) velocity of C at this instant.

[***Ans.*** **(a)** 3.46 m/s **(b)** 5.29 m/s]

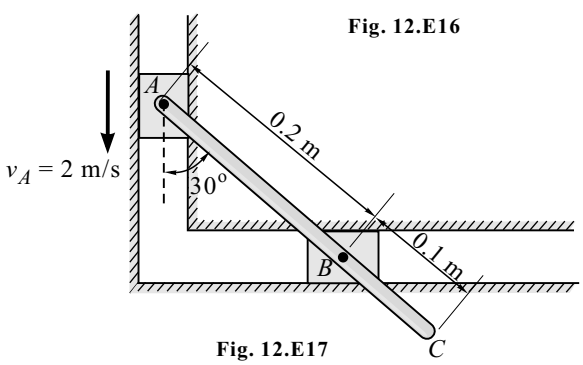

Fig. 12.E17

18. A 3 m long bar, slides down the plane shown in Fig. 12.E18. The velocity of end A is 3.6 m/s to the right. Determine the angular velocity of AB and velocity of end B and centre C at the instant shown.

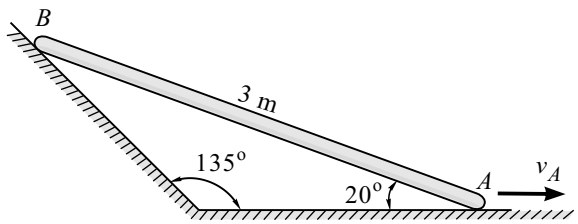

Fig. 12.E18

[***Ans.*** ω_{AB} = 0.9363 rad/s (↺),
v_B = 3.733 m/s and v_C = 3.387 m/s]

19. Arm AB rotates anticlockwise with uniform angular velocity 10 rad/s shown in Fig. 12.E19. Point C is constrained to move along the x-axis. Calculate the angular velocity of bar BC. Also determine the velocity of C.

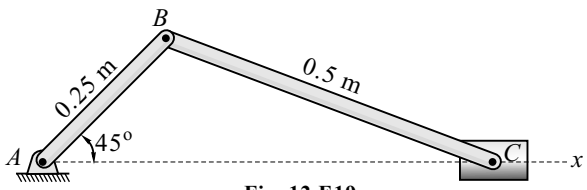

Fig. 12.E19

[***Ans.*** ω_{BC} = 3.78 rad/s (↻) and v_C = 2.434 m/s (←)]

20. For the crank and connecting rod mechanism shown in Fig. 12.E20, determine the velocity of the crosshead P and angular velocity of connecting rod AP either by using kinematics relationship or by using instantaneous center method.

Given OA = 100 mm, AP = 400 mm, O is hinged point, P is considered to move in vertical direction.

[***Ans.*** v_P = 0.574 m/s (↑) and
ω_{AP} = 2.057 rad/s (↻)]

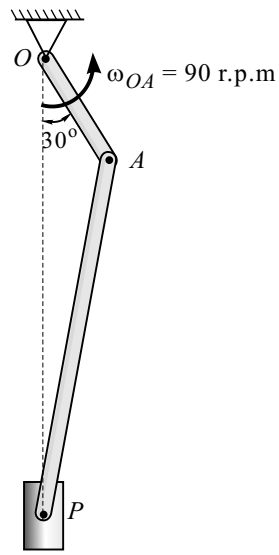

Fig. 12.E20

21. Block D shown in Fig. 12.E21 moves with a speed of 3 m/s. Determine velocity of links BD and AB and velocity of point B at the instant shown. Take length of link AB and BD as 0.4 m.

[***Ans.*** ω_{BD} = 5.3 rad/s (↺),
ω_{AB} = 5.3 rad/s (↻), and
v_B = 2.12 m/s]

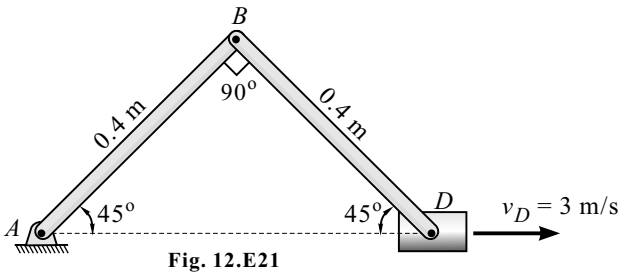

Fig. 12.E21

22. Member AB is rotating at a constant speed of 4 rad/s in counterclockwise direction. What is the angular velocity of bar BC for the position shown in Fig. 12.E22? What is the velocity of point D at the centre of bar BC? Bar BC is 3 m in length.

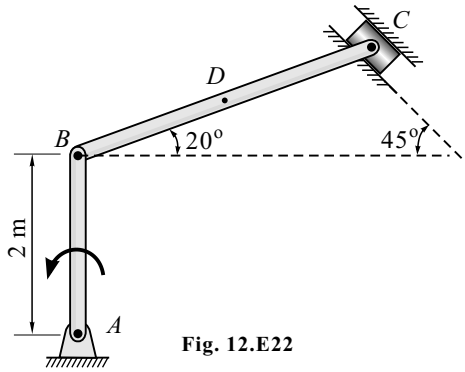

Fig. 12.E22

23. The rod BE in the mechanism shown in Fig. 12.E23 has an angular velocity of 4 rad/s; at the instant under observation; in counterclockwise direction, calculate the

(a) angular velocity of rod AD,

(b) velocity of point A, and

(c) velocity of collar D.

[***Ans.*** ω_{AD} = 4.27 rad/s (↻),
v_D = 1.33 m/s, and
v_A = 1.56 m/s]

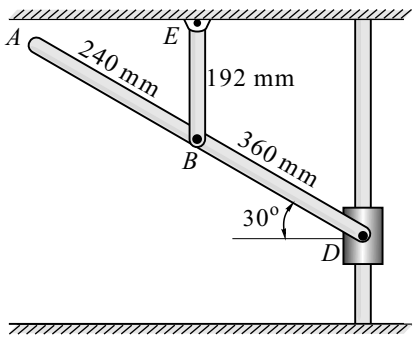

Fig. 12.E23

24. The wheel is rotating with an angular velocity ω = 8 rad/s as shown in Fig. 12.E24. Determine the velocity of the collar A at this instant.

[***Ans.*** v_A = 2.4 m/s (→)]

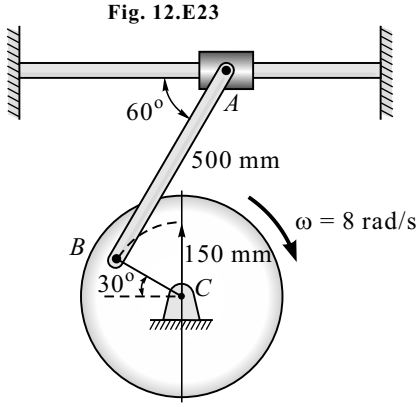

Fig. 12.E24

25. AB rotates with constant angular velocity ω = 15 rad/s clockwise as shown in Fig. 12.E25. Find ω_{BC} and V_E. E being midpoint of BC. Solve graphically on one full page of answer paper or otherwise.

[***Ans.*** ω_{BC} = 2.25 rad/s (↺) and
v_E = 0.432 m/s]

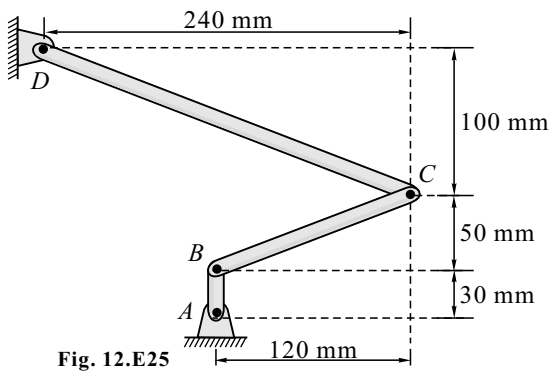

Fig. 12.E25

26. The bar AB has an angular velocity of 6 rad/s clockwise when $\theta = 50°$. Determine the corresponding angular velocities of bars BC and CD at this instant in Fig. 12.E26.

[***Ans.*** $\omega_{BC} = 4.692$ rad/s (↺) and
$\omega_{CD} = 9.19$ rad/s (↺)]

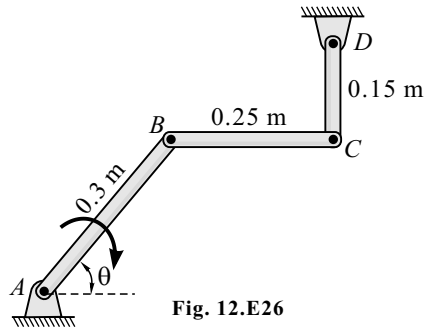

Fig. 12.E26

27. For the position shown in Fig. 12.E27, the angular velocity of bar AB is 10 rad/s anticlockwise. Determine the angular velocities of bars BC and CD.

[***Ans.*** $\omega_{BC} = 18$ rad/s (↺) and
$\omega_{CD} = 30$ rad/s (↺)]

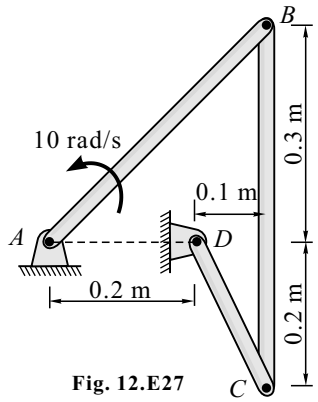

Fig. 12.E27

28. The bar AB of the linkage shown in Fig. 12.E28 has a clockwise angular velocity of 30 rad/s when $\theta = 60°$. Compute the angular velocities of member BC and the wheel at this instant.

[***Ans.*** $\omega_{BC} = 15$ rad/s (↺) and
$\omega_{CD} = 52$ rad/s (↺)]

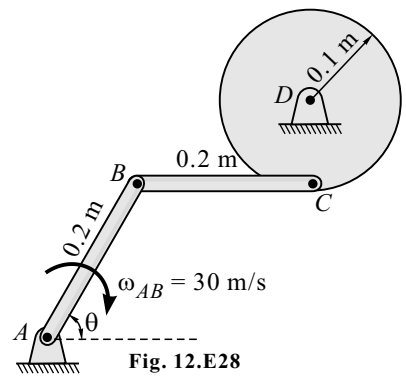

Fig. 12.E28

29. In the position shown in Fig. 12.E29, bar AB has constant angular velocity of 3 rad/s anticlockwise. Determine the angular velocity of bars BD and DE.

[***Ans.*** $\omega_{BD} = 0$ and
$\omega_{ED} = 1.6$ rad/s (↻)]

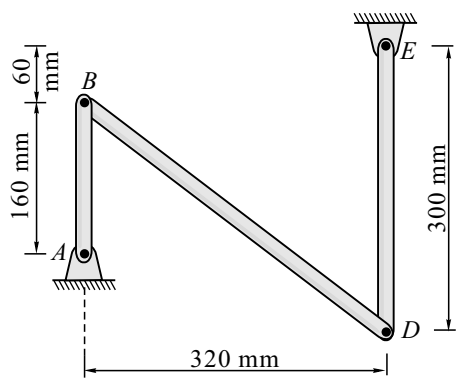

Fig. 12.E29

30. For the mechanism shown in Fig. 12.E30, bar AB has a constant angular velocity of 12 rad/s counterclockwise. Determine the angular velocity of the bar BC and CD at the instant shown.

[***Ans.*** $\omega_{BC} = 0$ and
$\omega_{CD} = 6.4$ rad/s (↻)]

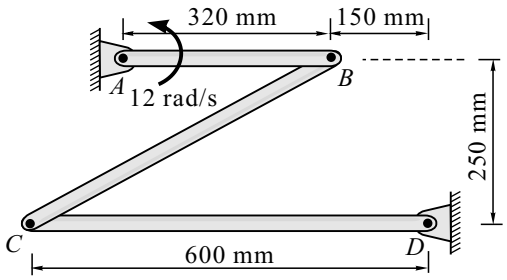

Fig. 12.E30

31. A wheel moves on a surface without slipping such that its centre has a velocity of 4 m/s towards horizontally. The angular velocities of the wheel is 4 rad/s clockwise. Determine the velocities of points P, Q and R shown on the wheel in Fig. 12.E15.

Given : Diameter of wheel = 2 m,

Distance CP = 600 mm,

v_C = 4 m/s (→) and ω = 4 rad/s (↻).

[***Ans.*** $v_P = 5.322$ m/s, $v_Q = 5.657$ m/s and $v_R = 0$]

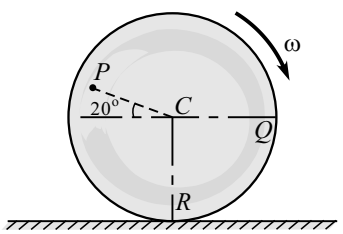

Fig. 12.E31

32. A compound wheel rolls without slipping as shown in Fig. 12.E32. The velocity of centre C is 1 m/s. Find the velocities of the point A, B and D.

[***Ans.*** $v_A = 3$ m/s (→), $v_B = 5.657$ m/s (←) and $v_D = 2.236$ m/s]

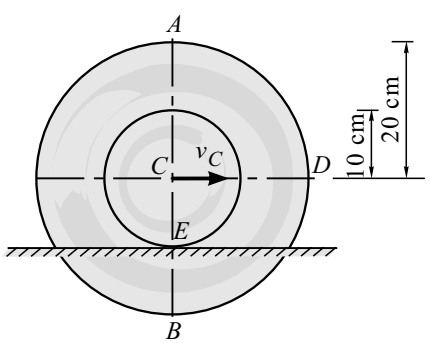

Fig. 12.E32

33. Due to slipping, points A and B on the rim of the disk have the velocities as shown in Fig. 12.E33. Determine the velocities of the centre point C and point D at this instant. Take radius of disk as 0.24 m.

[***Ans.*** $v_C = 0.75$ m/s (←) and $v_D = 2.83$ m/s]

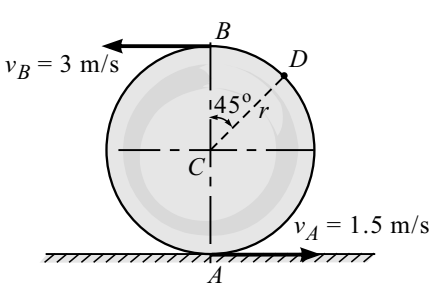

Fig. 12.E33

34. A square plate *OACB* of 2 m × 2 m size is rotating such that velocity vectors of velocities at *A* and *B* are shown in following Figs. 12.E34 (i), (ii), (iii) and (iv). Draw the diagram of square plate in each case of indicate the instantaneous centre of rotation and velocity vector v_C at vertex *C*. Detailed calculations are not expected but show all geometrical properties in the sketches (diagrams).

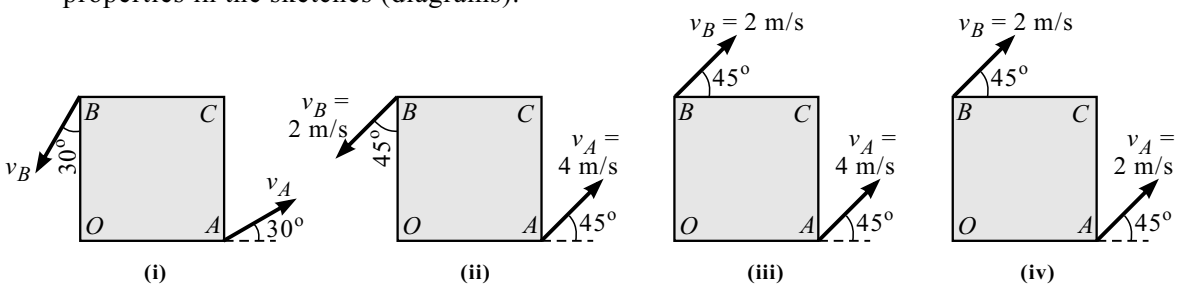

Fig. 12.E34

35. In Fig. 12.E35, the disc rolls without slipping on the horizontal plane with an angular velocity of 10 rev/min. clockwise. The bar *AB* is attached as shown. Line *OA* is horizontal. Point *B* moves along the horizontal plane. Determine the velocity of point *B* at the instant shown.

[***Ans.*** v_B = 1.0996 m/s]

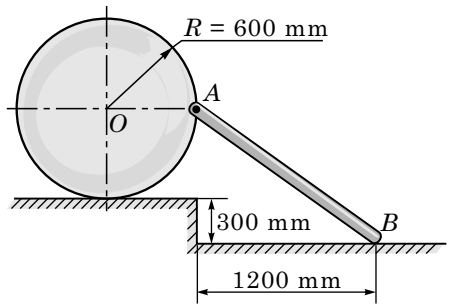

Fig. 12.E35

36. The 80 mm radius wheel shown rolls to the left with a velocity of 900 mm/s. Knowing that the distance *AO* is 50 mm, determine the velocity of the collar and the angular velocity of rod *B* when **(a)** β = 0, and **(b)** β = 90º.

[***Ans.*** **(a)** 0.338 m/s (←); 0
(b) 0.71 m/s (←); 2.37 rad/s (↻)]

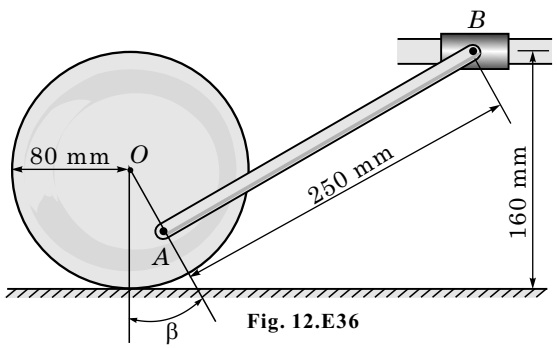

Fig. 12.E36

37. Figure 12.E37 shows a cylinder rolls without slipping. It has an angular velocity ω = 0.3 rad/s. Determine the angular velocity of bar *AB* and *BC* at the instant shown in Fig. 12.E15.

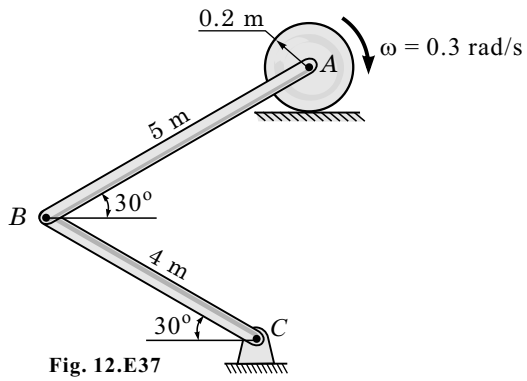

Fig. 12.E37

[II] Review Questions

1. What are the different types of rigid body motions?

2. Distinguish between translation motion and rotational motion.

3. Explain the following terms for rotating rigid body:

(i) Angular displacement (ii) Angular velocity (iii) Angular acceleration.

4. Compare the equation of translation motion and rotational motion.

5. Explain instantaneous centre of rotation (ICR).

6. General plane motion is the combination of translation motion and rotational motion. Justify.

7. Explain the behaviour of a rolling body.

[III] Fill in the Blanks

1. Translation motion can happen in _____ form and curvilinear form.

2. In translation motion, displacement, velocity and acceleration of each and every particle of a rigid body at any instant is _____.

3. The rate of change of angular position w.r.t. time is called as angular _____ of a rotating body.

4. General plane motion is the combination of _____ motion and _____ motion.

5. If a body is rolling without slipping on stationary surface then the point of contact with the stationary surface is called _____.

[IV] Multiple-choice Questions

Select the appropriate answer from the given options.

1. In kinematics of rigid body, we have to consider the _____ of the body.

(a) dimension **(b)** mass **(c)** force **(d)** density

2. Angular displacement is measured in unit _____.

(a) degree **(b)** radian **(c)** radians/s **(d)** radians/s^2

3. Angular velocity is measured in unit _____.

(a) degree **(b)** radian **(c)** radians/sec **(d)** radians/s^2

4. Angular acceleration is measured in unit _____.

(a) degree **(b)** radian **(c)** radians/sec **(d)** radians/s^2

CHAPTER

13

KINETICS OF PARTICLES I

NEWTON'S SECOND LAW/ D'ALEMBERTS' PRINCIPLE

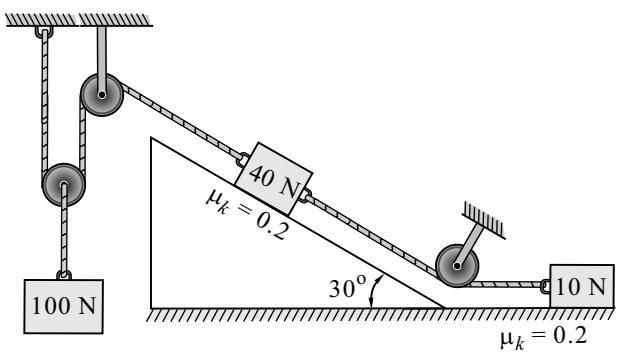

Learning Objectives

After reading this chapter, you will be able to answer the following questions:

- *What is kinetics?*
- *What is Newton's second law?*
- *What is D'Alemberts' principle?*
- *How can you analyse problems based on force, mass and acceleration?*
- *How can you apply Newton's second law for rectilinear and curvilinear motion?*

13.1 INTRODUCTION TO KINETICS

- **Kinetics :** *It is the study of geometry of motion with reference to the cause of motion*. Here we consider force and mass.

Basic Concepts

- **Particle :** *It is a matter with considerable mass but negligible dimension,* i.e., any object whose mass is considered but dimension is not considered.
- **Force :** *An external agency which changes or tends to change the state of rest or of uniform motion of a body upon which it acts is known as force*.
- **Mass :** *It is the quantity of matter contained in a body.*

  These quantity does not changes on account of the position occupied by the body. The force of attraction exerted by the earth on two different bodies with same mass will be in the same manner. *Mass is the property of body which measures its resistance to a change of motion*. Its S.I. unit is kg.
- **Weight :** *The gravitational force of attraction exerted by the earth on a body is known as the weight of the body*. This force exists whether the body is at rest or in motion. Since this attraction is a force, the weight of body should be expressed in Newton (N) in SI units.

13.2 NEWTON'S SECOND LAW OF MOTION

- **Newton's Second Law of Motion :** *If an external unbalanced force acts on a body, the momentum of the body changes. The rate of change of momentum is directly proportional to the force and takes place in the direction of motion.*

- **Momentum :** *The quantity of motion possessed by the body.* Linear momentum of a body is calculated as the product of mass and velocity of the body.

  Rate of change of momentum is directly proportional to the force, i.e.,

$$\frac{d}{dt}(m\bar{v}) \propto \bar{F}$$

$$\frac{d}{dt}(m\bar{v}) = k\bar{F}$$

$$m\frac{d\bar{v}}{dt} = k\bar{F}$$

$$m\bar{a} = k\bar{F}$$

when $m = 1$, $a = 1$, $F = 1$ then $k = 1$

$$\therefore \bar{F} = m\bar{a}$$

In other words, we can also say that *if the resultant force acting on the particle is not zero, the particle will have an acceleration proportional to the magnitude of the resultant and in the direction of the resultant force.*

$$\bar{F} = m\bar{a}$$

1. For Rectilinear Motion

(Rectangular Coordinate System)

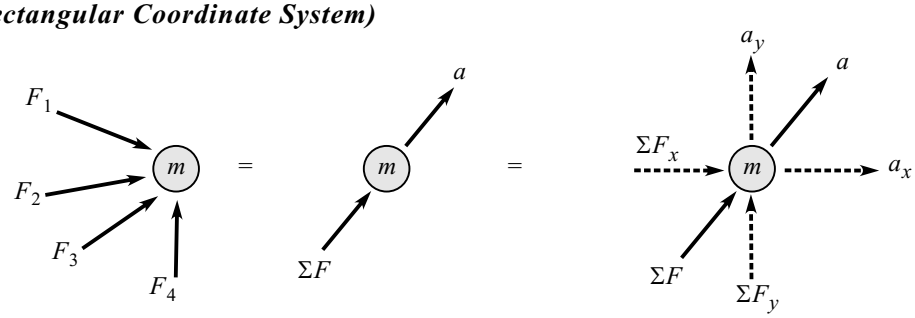

$$\sum F = ma$$

$$\sum F_x = ma_x$$

$$\sum F_y = ma_y$$

Fig. 13.2-i

2. For Curvilinear Motion

(Tangent and Normal Coordinate System)

a_t = Tangential component of acceleration

a_n = Normal component of acceleration

$$\sum F_t = ma_t = m\frac{dv}{dt}$$

$$\sum F_n = ma_n = m\frac{v^2}{\rho}$$

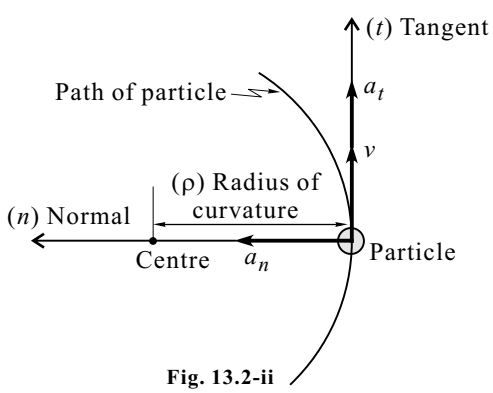

Fig. 13.2-ii

13.3 D'ALEMBERTS' PRINCIPLE (DYNAMIC EQUILIBRIUM)

- **Dynamic Equilibrium :** The force system consisting of external forces and inertia force can be considered to keep the particle in equilibrium. Since the resultant force externally acting on the particle is not zero, the particle is said to be in *dynamic equilibrium*.

- **D'Alemberts' Principle :** *The algebraic sum of external force (ΣF) and inertia force (–ma) is equal to zero.*

$$\sum F + (-ma) = 0$$

- **For Rectilinear Motion**

$$\sum F_x + (-ma_x) = 0 \quad \text{and} \quad \sum F_y + (-ma_y) = 0$$

- **For Curvilinear Motion**

$$\sum F_t + (-ma_t) = 0 \quad \text{and} \quad \sum F_n + (-ma_n) = 0$$

Note : Comparing D'Alemberts' Principle with Newton's Second Law

We understand Newton's Law as the original and D'Alembert had expressed the same concept in a different wording with adjustment of mathematical expression. So in this book we have solved problems considering Newton's Second Law.

How can you Analyse a Problem?

1. Draw the F.B.D. of a particle showing all active and reactive force with all known and unknown values by considering geometrical angles if any (*Similar to F.B.D. in Statics*).
2. Show direction of acceleration and consider +ve sign conversion along the direction of acceleration.
3. **Assumption for direction of acceleration**
   - **a.** If the friction is not given then one can assume any direction for acceleration. Positive answer means assumed direction is correct.
   - **b.** If the friction is given then one has to care fully analyse the problem and assume the direction of acceleration. Here, we must get +ve answer. In case the answer is negative then one should resolve the whole problem with change in the direction opposite to the assumed direction.
4. If more than one particles are involved in a system then find the kinematic relation between the particles (i.e., relation of displacement, velocity and acceleration).
5. For finding the kinematic relation of connected particles introduce the tension in each cord. Apply the Virtual Work Principle which says *total virtual work done by internal force (tension) is zero*. Consider work done to be +ve if displacement and tension are in same direction and work done to be –ve if displacement and tension are in one direction.

Solved Problems Based on Rectilinear Motion

Problem 1

A crate of 20 kg mass is pulled up the inclined 20° by force F which varies as per the graph shown in Fig. 13.1(a). Find the acceleration and velocity of the crate at $t = 5$ s, knowing that its velocity was 4 m/s at $t = 0$. Take $\mu_k = 0.2$.

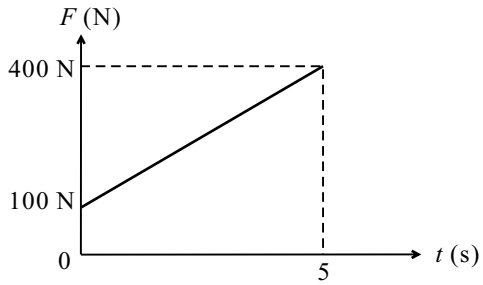

Fig. 13.1(a)

Solution

(i) From the graph F-t shown in Fig. 13.1(a), we have

$$y = mx + c$$

$$m = \frac{400 - 100}{5} = 60 \quad \text{and} \quad c = 100$$

$$\therefore \; F = 60t + 100$$

(ii) **Consider the F.B.D. of the crate**

Refer to Fig. 13.1(b).

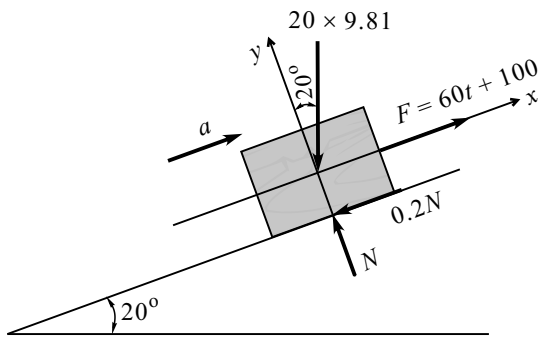

Fig. 13.1(b)

By Newton's second law, we have

$$\sum F_x = ma_x$$

$$F - 0.2N - 20 \times 9.81 \sin 20 = 20 \times a$$

$$60t + 100 - 0.2 \times 20 \times 9.81 \cos 20^o$$
$$- 20 \times 9.81 \sin 20^o = 20 \times a$$

$$60t - 4 = 20a$$

$$a = 3t - 0.2 \quad \text{(Variable acceleration)}$$

$$a = 3 \times 5 - 0.2$$

$$a = 14.8 \text{ m/s}^2$$

(iii) $a = \dfrac{dv}{dt}$

$$\therefore \; dv = a\,dt$$

$$\therefore \; dv = (3t - 0.2)\,dt$$

Integrating both sides,

$$\int_{v_1 = 4 \text{ m/s}}^{v_2} dv = \int_{t_1 = 0}^{t_2 = 5} (3t - 0.2)\,dt$$

$$\Big[v\Big]_4^{v_2 = ?} = \left[\frac{3 \times t^2}{2} - 0.2t\right]_0^5$$

$$v_2 - 4 = \left[\frac{3 \times 5^2}{2} - 0.2 \times 5\right]$$

$$v_2 = 32.5 \text{ m/s}$$

Problem 2

A 50 kg block kept on the top of a 15° sloping surface is pushed down the plane with an initial velocity of 20 m/s. If $\mu_k = 0.4$, determine the distance traveled by the block and the time it will take as it comes to rest.

Solution

(i) Consider the F.B.D. of 50 kg block (Refer to Fig. 13.2)

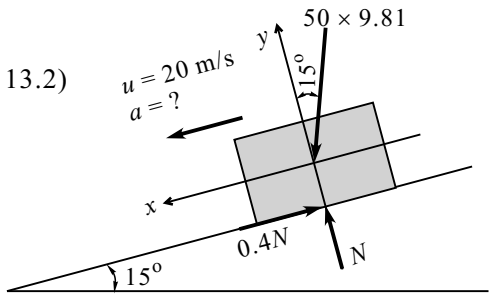

Fig. 13.2

(ii) By Newton's second law, we have

$$\sum F_y = ma_y = 0 \quad (\because a_y = 0)$$

$$N - 50 \times 9.81 \cos 15^\circ = 0$$

$$N = 50 \times 9.81 \cos 15^\circ$$

$$\sum F_x = ma_x$$

$$50 \times 9.81 \sin 15^\circ - 0.4 \times 50 \times 9.81 \cos 15^\circ = 50a$$

$$\therefore \; a = -1.25 \text{ m/s}^2 \text{ (Retardation)}$$

(iii) $u = 20$ m/s ; $v = 0$; $a = -1.25$ m/s^2 ; $s = ?$; $t = ?$

$$v = u + at$$

$$0 = 20 + (-1.25)t$$

$$\therefore \; t = 16 \text{ s}$$

$$s = ut + \frac{1}{2}at^2$$

$$s = 20 \times 16 + \frac{1}{2}(-1.25) \times (16)^2$$

$$s = 160 \text{ m}$$

Problem 3

An aeroplane has a mass of 25000 kg and its engines develop a total thrust of 40 kN along the run way. The force of air resistance to motion of aeroplane is given by $R = 2.25v^2$ where v is m/s and R is in Newton. Determine the length of runway required if the plane takes off and becomes airborne at a speed of 240 km/hr.

Solution

(i) Consider the F.B.D. of the plane (Refer to Fig. 13.3).

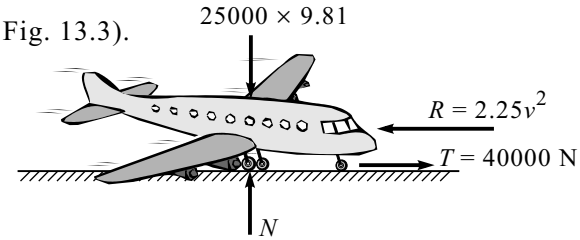

Fig. 13.3 : F.B.D. of Plane

By Newton's second law, we have

$$\sum F_x = ma_x$$

$$40000 - 2.25v^2 = 25000a$$

$$40000 - 2.25v^2 = 25000 \times v\frac{dv}{ds}$$

$$\therefore \; ds = 25000\left(\frac{v\,dv}{40000 - 2.25v^2}\right)$$

Integrating both the sides, we get

$$\int_0^s ds = 25000\int_0^{66.67}\left(\frac{v\,dv}{40000 - 2.25v^2}\right) \qquad \left[v = 240 \times \frac{5}{18} = 66.67 \text{ m/s}\right]$$

$$s = \frac{25000}{-2.25 \times 2}\left[\log_e(40000 - 2.25\,v^2)\right]_0^{66.67}$$

$$\therefore \; s = 1598.3 \text{ m} \quad \text{(Runway length)}$$

Problem 4

Two blocks A (10 kg mass), B (28 kg mass) are separated by 12 m as shown in Fig. 13.4(a). If the blocks start moving, find the time 't' when the blocks collide. Assume μ = 0.25 for block A and plane and μ = 0.10 for block B and plane.

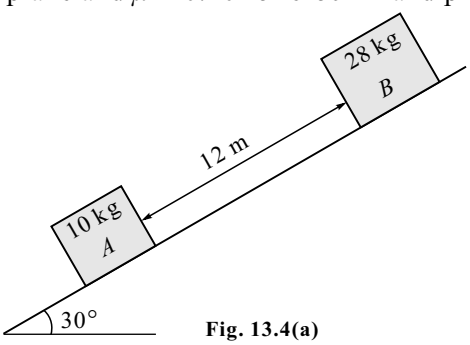

Fig. 13.4(a)

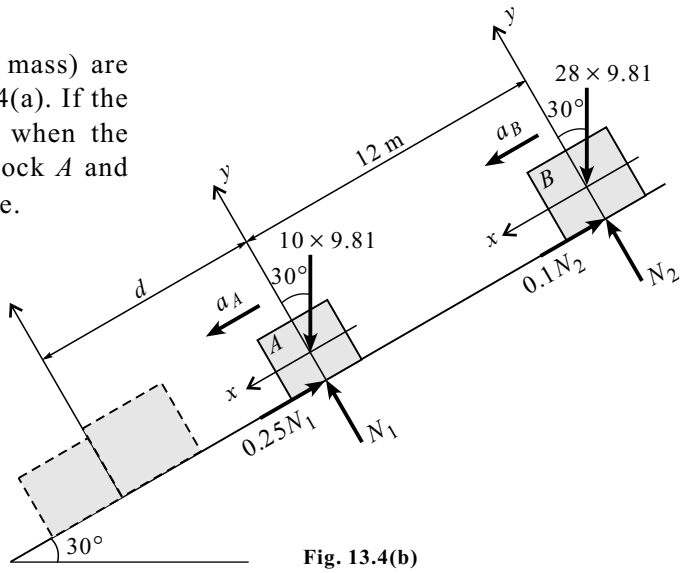

Fig. 13.4(b)

Solution

Refer to Fig. 13.4(b).

(i) Consider the F.B.D. of block *A*

By Newton's second law, we have

$\sum F_x = ma_x$

$10 \times 9.81 \sin 30^\circ - 0.25 \times 10 \times 9.81 \cos 30^\circ = 10a_A$

$a_A = 2.781 \text{ m/s}^2 \left(30^\circ \swarrow\right)$

(ii) Consider the F.B.D. of block *B*

By Newton's second law, we have

$\sum F_x = ma_x$

$29 \times 9.81 \sin 30^\circ - 0.1 \times 28 \times 9.81 \cos 30^\circ = 28a_B$

$a_B = 4.055 \text{ m/s}^2 \left(30^\circ \swarrow\right)$

(iii) Motion of block *A*

$$d = 0 + \frac{1}{2} a_A t^2 \qquad \text{... (I)}$$

(iv) Motion of block *B*

$$d + 12 = 0 + \frac{1}{2} a_B t^2 \qquad \text{... (II)}$$

(v) From Eqs. (I) and (II), we get

$$\frac{1}{2} \times 2.781 \times t^2 + 12 = \frac{1}{2} \times 4.055 \times t^2$$

$\therefore\ t = 4.34$ s (Time when the blocks collide)

Problem 5

Two blocks A and B, having masses of 15 kg and 30 kg respectively, are released from rest on an inclined as shown in Fig. 13.5(a). Find the acceleration of each block considering surface to be frictionless.

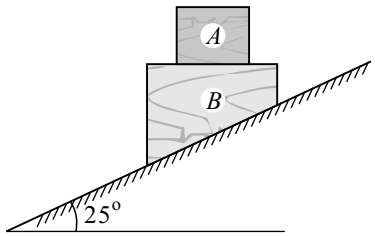

Fig. 13.5(a)

Solution

(i) Block B will slide along inclined surface with block A. Also block A will slide on block B. It means block A will have relative motion w.r.t. block B.

$$\therefore \quad \bar{a}_{A/B} = \bar{a}_A - \bar{a}_B \qquad \text{..... (I)}$$

(ii) Consider the F.B.D. of blocks A and B together [Fig. 13.5(b)]

By Newton's second law, we have

$$\sum F_x = ma_x$$

$$(30 + 15)\ 9.81 \sin 25^\circ = 30a_B + 15a_B - 15 \cos 25^\circ\, a_{A/B}$$

$$186.57 = 45a_B - 13.6\, a_{A/B} \qquad \text{..... (II)}$$

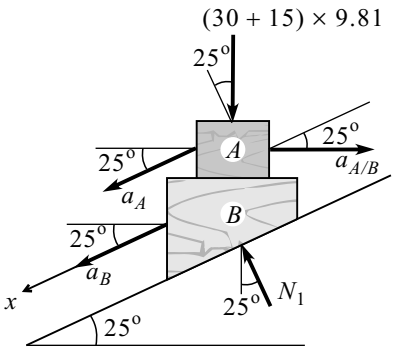

Fig. 13.5(b) : F.B.D. of Blocks A and B Together

(iii) Consider the F.B.D. of block A only [Fig. 13.5(c)]

By Newton's second law, we have

$$\sum F_x = ma_x$$

$$0 = 15a_{A/B} - 15a_B \cos 25^\circ$$

$$a_{A/B} = 0.9063a_B \qquad \text{..... (III)}$$

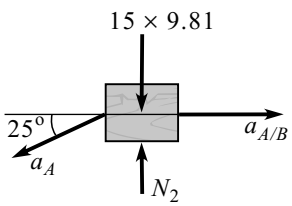

Fig. 13.5(c) : F.B.D. of Block A

(iv) From Eq. (II),

$$186.57 = 45a_B - 13.6(0.9063a_B)$$

$$\therefore \quad a_B = 5.71 \text{ m/s}^2 \ (25^\circ \swarrow)$$

From Eq. (III),

$$a_{A/B} = 5.175 \text{ m/s}^2 \ (\rightarrow)$$

From Eq. (I),

$$\bar{a}_{A/B} = \bar{a}_A - \bar{a}_B$$

$$\bar{a}_A = \bar{a}_{A/B} + \bar{a}_B$$

$$\bar{a}_A = -5.175\boldsymbol{i} + (5.71 \cos 25^\circ\, \boldsymbol{i} - 5.71 \sin 25^\circ\, \boldsymbol{j})$$

$$\bar{a}_A = -2.413\, \boldsymbol{j}$$

$$\therefore \quad a_A = 2.413 \text{ m/s}^2 \ (\downarrow)$$

Problem 6

An elevator being lowered into a mine shaft starts from rest and attains a speed of 10 m/s within a distance of 15 metres. The elevator alone has a mass of 500 kg and it carries a box of 600 kg mass in it. Find the total tension in cables supporting the elevator, during this accelerated motion. Also, find the total force between the box and the floor of the elevator.

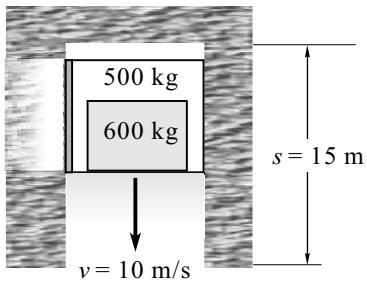

Fig. 13.6(a)

Solution

(i) Considering uniform acceleration of elevator

We have

$v^2 = u^2 + 2as$

$10^2 = 0^2 + 2a \times 15$

$a = 3.33 \text{ m/s}^2$

(ii) Considering the F.B.D. of elevator with box [Fig. 13.6(b)]

By Newton's second law, we have

$\sum F_y = ma_y$

$(500 + 600)9.81 - T = (500 + 600)a$

$T = 1100 \times 9.81 - 1100 \times 3.33$

$T = 7128 \text{ N}$

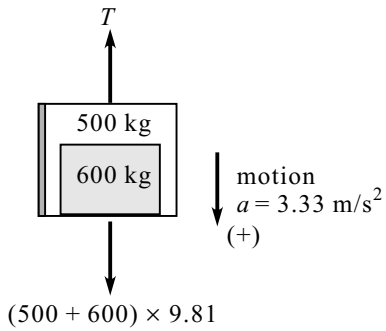

Fig. 13.6(b) : F.B.D. of Elevator with Box

(iii) Consider the F.B.D. of the box [Fig. 13.6(c)]

Let N be the normal reaction exerted between the box and floor of the elevator.

$\sum F_y = ma_y$

$600 \times 9.81 - N = 600 \times 3.33$

$N = 3888 \text{ N}$

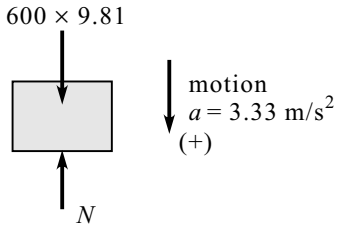

Fig. 13.6(c) : F.B.D. of Box

Problem 7

Two weights $W_1 = 400$ N and $W_2 = 100$ N are connected by a string and move along a horizontal plane under the action of force $P = 200$ N applied horizontally to the weight W_1. The coefficient of friction between the weights and the plane is 0.25. Determine the acceleration of the weights and the tension in the string. Will the acceleration and tension in the string remain the same if the weights are interchanged?

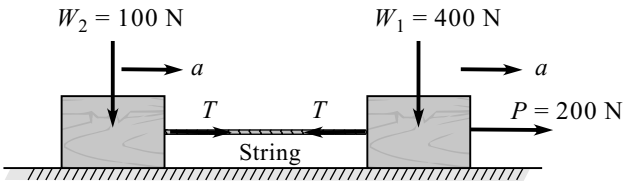

Fig. 13.7(a)

Solution

Note : Since both the blocks are connected by single string, therefore, acceleration will remain same.

Case I

(i) Consider the F.B.D. of block W_1 [Fig. 13.7(b)]

By Newton's second law, we have

$\sum F_y = ma_y = 0 \quad (\because a_y = 0)$

$N_1 - 400 = 0$

$N_1 = 400$ N

$\sum F_x = ma_x$

$200 - T - \mu N_1 = \dfrac{400}{9.81} \times a$

$200 - T - 0.25 \times 400 = 40.78a$

$100 - T = 40.78a$ ..... (I)

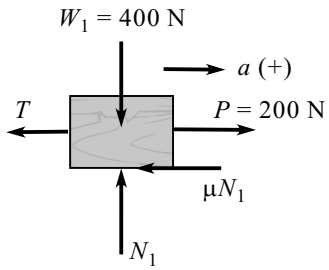

Fig. 13.7(b) : F.B.D. of Block W_1

(ii) Consider the F.B.D. of block W_2 [Fig. 13.7(c)]

By Newton's second law, we have

$\sum F_y = ma_y = 0 \quad (\because a_y = 0)$

$N_2 - 100 = 0$

$N_2 = 100$ N

$\sum F_x = ma_x$

$T - \mu N_2 = \dfrac{100}{9.81} a$

$T - 0.25 \times 100 = 10.19a$

$T - 25 = 10.19a$ ..... (II)

Solving Eqs. (I) and (II),

$T = 39.98$N and $a = 1.47$ m/s^2

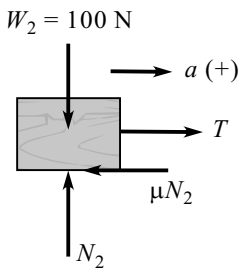

Fig. 13.7(c) : F.B.D. of Block W_2

Case II : Weights interchanged

Refer to Fig. 13.7(d).

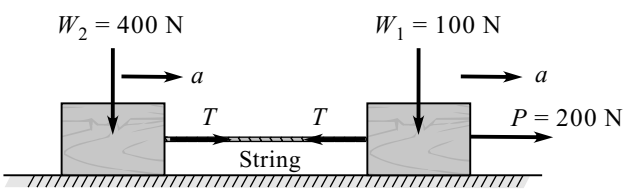

Fig. 13.7(d)

(i) Consider the F.B.D. of block W_1 [Fig. 13.7(e)]

By Newton's second law, we have

$\sum F_y = a_y = 0 \quad (\because a_y = 0)$

$N_1 - 100 = 0$

$N_1 = 100$ N

$\sum F_x = ma_x$

$200 - T - \mu N = \dfrac{100}{9.81} a$

$175 - T = 10.19a$ ..... (III)

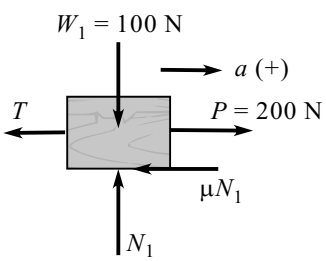

Fig. 13.7(e) : F.B.D. of Block W_1

(ii) Consider the F.B.D. of block W_2 [Fig. 13.7(f)]

By Newton's second law, we have

$\sum F_y = ma_y = 0 \quad (\because a_y = 0)$

$N_2 - 400 = 0$

$\therefore N_2 = 400\text{N}$

$\sum F_x = ma_x$

$T - \mu N_2 = \dfrac{400}{9.81} a$

$T - 100 = 40.78a \qquad \text{..... (IV)}$

Solving Eqs. (III) and (IV),

$T = 160 \text{ N}$ and $a = 1.47 \text{ m/s}^2$

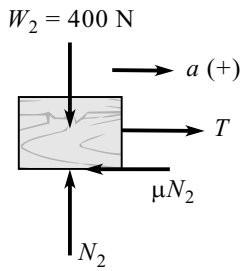

Fig. 13.7(f) : F.B.D. of Block W_2

Referring to both the cases, we can conclude that tension in string changes, if the position of weights are interchanged whereas acceleration is same for both the cases.

Problem 8

The 100 kg crate shown in Fig. 13.8(a) is hoisted up by the incline using the cable and motor M. For a short time, the force in the cable is $F = 800\ t^2$ N where t is in seconds. If the crate has an initial velocity $v_1 = 2$ m/s when $t = 0$ s, determine the velocity when $t = 2$ s. The coefficient of kinetic friction between the crate and inclined is $\mu_k = 0.3$.

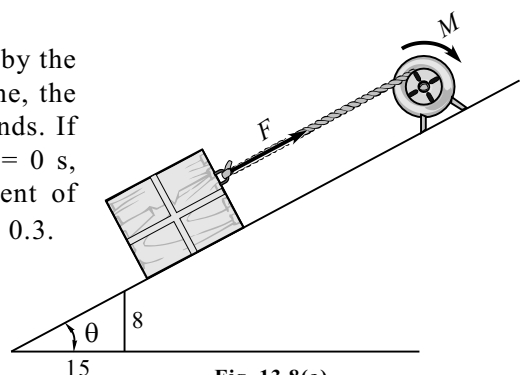

Fig. 13.8(a)

Solution

(i) Consider the F.B.D. of the crate [Fig. 13.8(b)]

By Newton's second law, we have

$\sum F_y = ma_y = 0 \qquad (\because a_y = 0)$

$N - 100 \times 9.81 \cos\theta = 0$

$N = 865.53 \text{ N} \qquad \left(\tan\theta = \dfrac{8}{15} \quad \therefore \theta = 28.07^\circ\right)$

$\sum F_x = ma_x$

$F - 100 \times 9.81 \sin\theta - \mu_k N = 100 \times a$

$800\ t^2 - 100 \times 9.81 \times \sin\theta - 0.3 \times 865.53 = 100\ a$

$a = 8t^2 - 7.213$

$\dfrac{dv}{dt} = 8t^2 - 7.213 = 8t^2 - 7.213$

$$\int_{v_1 = 2 \text{ m/s}}^{v_2} dv = \int_{t_1 = 0}^{t_2 = 2 \text{ s}} (8t^2 - 7.213)\, dt$$

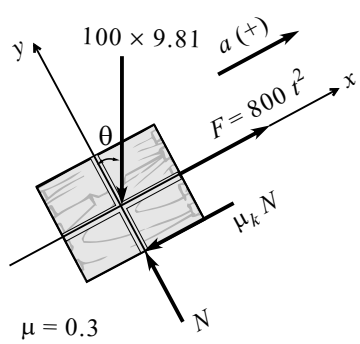

Fig. 13.8(b) : F.B.D. of a Crate

$$\Big[v\Big]_2^{v_2} = \left[\frac{8t^3}{3} - 7.213\right]_0^2 \quad \Rightarrow \quad v_2 - 2 = \left[\frac{8(2)^3}{3} - 7.213(2)\right] - \Big[0\Big]$$

$v_2 = 8.91 \text{ m/s}$

Problem 9

A body of 25 kg mass resting on a horizontal table is connected by string passing over a smooth pulley at the edge of the table to another body of 3.75 kg mass and hanging vertically as shown in Fig. 13.9(a). Initially, the friction between 25 kg mass and the table is just sufficient to prevent the motion. If an additional 1.25 kg is added to the 3.75 kg mass, find the acceleration of the masses.

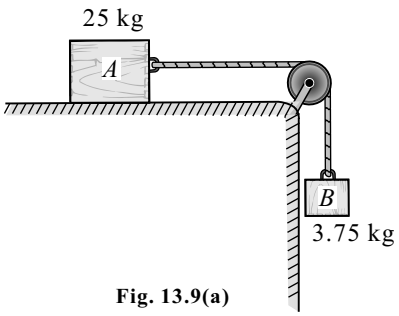

Fig. 13.9(a)

Solution

(i) Static equilibrium analysis

Consider the F.B.D. of block A [Fig. 13.9(b)]

$\sum F_y = 0$

$N - 25 \times 9.81 = 0$

$N = 245.25\text{N}$

$\sum F_x = 0$

$T - \mu N = 0$

$3.75 \times 9.81 - \mu \times 245.25 = 0$

$\mu = 0.15$

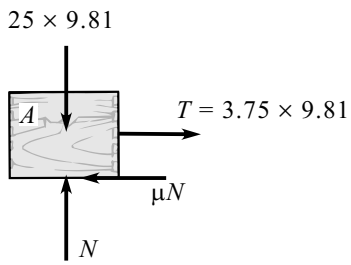

Fig. 13.9(b) : F.B.D. of Block *A*

(ii) Dynamic equilibrium analysis

Assume $\mu_s = \mu_k = 0.15$

Consider the F.B.D. of block A [Fig. 13.9(c)]

By Newton's second law, we have

$\sum F_y = ma_y = 0 \quad (\because a_y = 0)$

$N - 25 \times 9.81 = 0$

$N = 245.25\text{N}$

$\sum F_x = ma_x$

$T - \mu N = 25a$

$T - 0.15 \times 245.25 = 25a$

$T = 36.79 + 25a$ ..... (I)

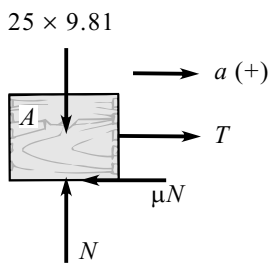

Fig. 13.9(c) : F.B.D. of Block *A*

(iii) Consider the F.B.D. of block *B* [Fig. 13.9(d)]

By Newton's second law, we have

$\sum F_y = ma_y$

$5 \times 9.81 - T = 5 \times a$

$T = 49.05 - 5a$ ..... (II)

Equating Eqs. (I) and (II), we get

$a = 0.409 \text{ m/s}^2$ and $T = 47.005$ N

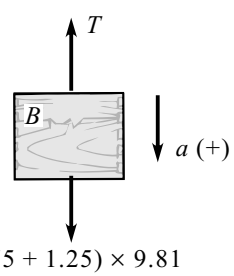

Fig. 13.9(d) : F.B.D. of Block *B*

Problem 10

A horizontal force P = 600 N is exerted on block A of 120 kg mass as shown in Fig. 13.10(a). The coefficient of friction between block A and the horizontal plane is 0.25. Block B has a mass of 30 kg and the coefficient of friction between it and the plane is 0.4. The wire between the two blocks makes 30° with the horizontal. Calculate the tension in the wire.

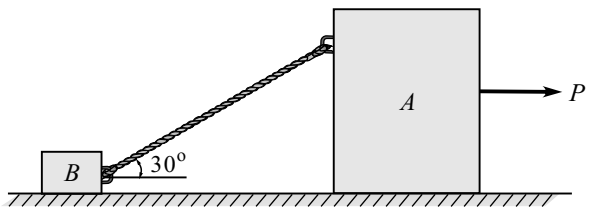

Fig. 13.10(a)

Solution

As both the blocks are connected by a single wire, the acceleration of both the blocks will be the same.

(i) Consider the F.B.D. of block *B* [Fig. 13.10(b)]

By Newton's second law, we have

$\sum F_y = ma_y = 0 \quad (\because a_y = 0)$

$N_B + T \sin 30^\circ - 30 \times 9.81 = 0$

$N_B = 294.3 - T \sin 30^\circ$

$\sum F_x = ma_x$

$T \cos 30^\circ - \mu_B N_B = 30 \times a$

$T \cos 30^\circ - 0.4\,(294.3 - T \sin 30^\circ) = 30a$

$T - 28.14a = 110.43 \qquad \text{..... (I)}$

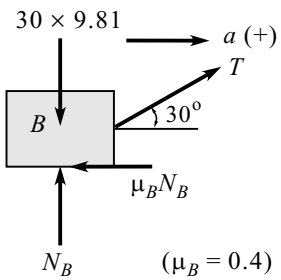

Fig. 13.10(b) : F.B.D. of Block *B*

(ii) Consider the F.B.D. of block *A* [Fig. 13.10(c)]

By Newton's second law, we have

$\sum F_y = ma_y = 0 \quad (\because a_y = 0)$

$N_A - T \sin 30^\circ - 120 \times 9.81 = 0$

$N_A = 1177.2 + T \sin 30^\circ$

$\sum F_x = ma_x$

$600 - \mu_A N_A - T \cos 30^\circ = 120 \times a$

$600 - 0.25(1177.2 + T \sin 30^\circ) - T \cos 30^\circ = 120\,a$

$T + 121.09a = 308.476 \qquad \text{..... (II)}$

Solving Eqs. (I) and (II), we get

$T = 147.78$ N and $a = 1.327$ m/s^2

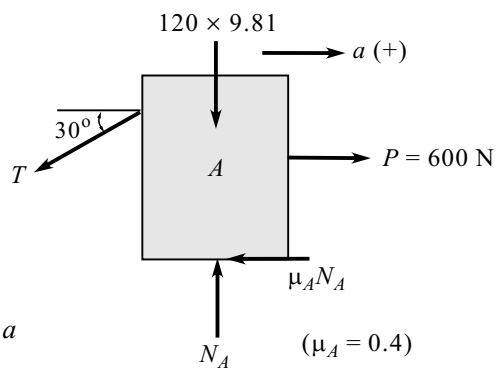

Fig. 13.10(c) : F.B.D. of Block *A*

Problem 11

Masses A and B are 7.5 kg and 27.5 kg respectively as shown in Fig. 13.11(a). The coefficient of friction between A and the plane is 0.25 and between B and the plane is 0.1. What is the force between the two as they slide down the incline?

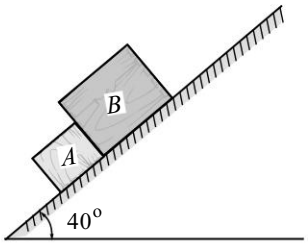

Fig. 13.11(a)

Solution

(i) Consider the F.B.D. of block *A* [Fig. 13.11(b)]

By Newton's second law, we have

$\sum F_y = ma_y = 0 \quad (\because a_y = 0)$

$N_A - 7.5 \times 9.81 \cos 40^o = 0$

$N_A = 56.36$ N

$\sum F_x = ma_x$

$P + 7.5 \times 9.81 \sin 40^o - 0.25 \times 56.36 = 7.5a$

$33.2 + P = 7.5a$ ..... (I)

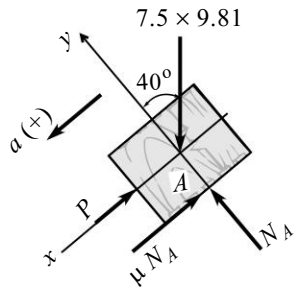

Fig. 13.11(b) : F.B.D. of Block *A*

(ii) Consider the F.B.D. of block *B* [Fig. 13.11(c)]

By Newton's second law, we have

$\sum F_y = ma_y = 0 \quad (\because a_y = 0)$

$N_B - 27.5 \times 9.81 \cos 40^o = 0$

$N_B = 206.66$ N

$\sum F_x = ma_x$

$27.5 \times 9.81 \sin 40^o - P - 0.1 \times 206.66 = 27.5a$

$152.74 - P = 27.5a$ ..... (II)

Solving Eqs. (I) and (II),

$P = 6.625$ and $a = 5.31$ m/s^2

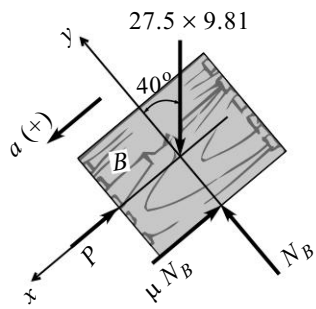

Fig. 13.11(c) : F.B.D. of Block *B*

Problem 12

In the system of pulleys, the pulleys are massless and the strings are inextensible. Mass of A = 2 kg, mass of B = 4 kg and mass = 6 kg as shown in Fig. 13.12(a). If the system is released from rest, find **(i)** tension in each of the three string, and **(ii)** acceleration of each of the three masses.

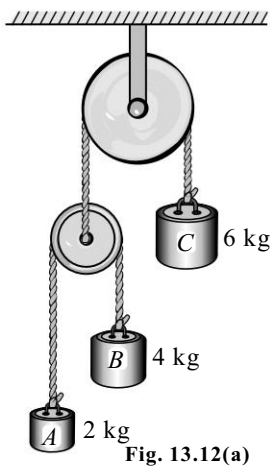

Fig. 13.12(a)

Solution

Assume the direction of motion of all block as above.

(i) Kinematic relation [Fig. 13.12(b)]

$Tx_A + Tx_B + 2Tx_C = 0$

$x_A + x_B + 2x_C = 0$

Differentiating w.r.t. t

$v_A + v_B + 2v_C = 0$

Differentiating w.r.t. t again,

$a_A + a_B + 2a_C = 0$ ..... (I)

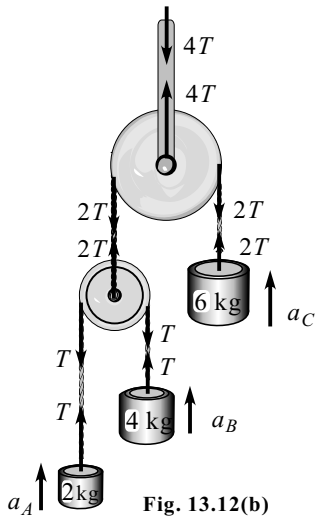

Fig. 13.12(b)

(ii) Consider the F.B.D. of block *A* [Fig. 13.12(c)]

$\sum F_y = ma_y$

$T = 2 \times 9.81 = 2a_A$

$a_A = 0.5T - 9.81$ ..... (II)

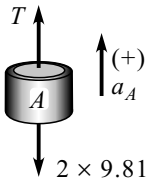

Fig. 13.12(c) : F.B.D. of Block *A*

(iii) Consider the F.B.D. of block *B* [Fig. 13.12(d)]

$\sum F_y = ma_y$

$T - 4 \times 9.81 = 4a_B$

$a_B = 0.25T - 9.81$ ..... (III)

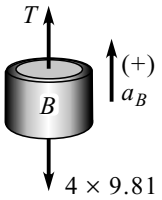

Fig. 13.12(d) : F.B.D. of Block *B*

(iv) Consider the F.B.D. of block *C* [Fig. 13.12(e)]

$\sum F_y = ma_y$

$2T - 6 \times 9.81 = 6a_C$

$a_C = 0.33T - 9.81$ ..... (IV)

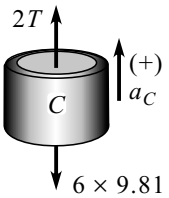

Fig. 13.12(e) : F.B.D. of Block *C*

(v) Putting Eqs. (II), (III) and (IV) in Eq. (I),

$a_A + a_B + a_C = 0$

$(0.5T - 9.81) + (0.25T - 9.81) + (0.33T - 9.81) = 0$

$0.5T + 0.25T + 0.33T - 9.81 - 9.81 - 9.81 = 0$

$1.08T - 29.43 = 0$

$T = 27.25$ N

(vi) From Eq. (I),

$a_A = 0.5 \times 27.25 - 9.81$

$a_A = 3.82$ m/s^2 (↑)

(vii) From Eq. (II),

$a_B = 0.25 \times 27.25 - 9.81$

$a_B = -3$ m/s^2 (Wrong assumed direction)

$a_B = 3$ m/s^2 (↓)

(viii) From Eq. (III),

$a_C = 0.33 \times 27.25 - 9.81$

$a_C = -0.82$ m/s^2 (Wrong assumed direction)

$a_C = 0.82$ m/s^2 (↓)

Problem 13

Determine the tension developed in chords attached to each block and the accelerations of the blocks when the system shown in Fig. 13.13(a) is released from rest. Neglect the mass of the pulleys and chords.

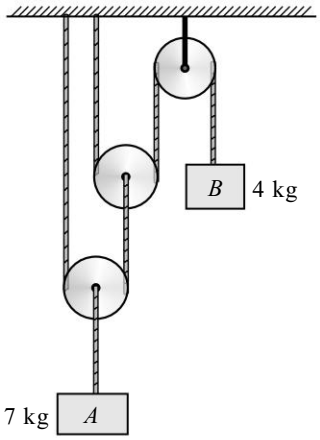

Fig. 13.13(a)

Solution

(i) Kinematic relation [Fig. 13.13(b)]

Work done by internal forces = 0

$4Tx_A - Tx_B = 0$

$4x_A - x_B = 0$

Differentiating w.r.t. t

$4v_A - v_B = 0$

Differentiating w.r.t. t

$4a_A - a_B = 0$ ..... (I)

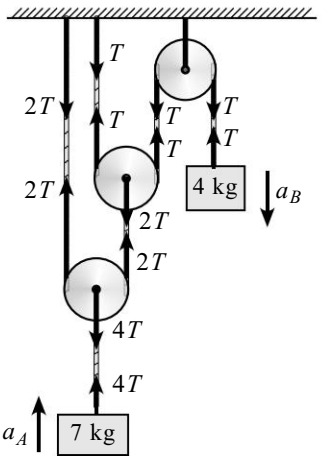

Fig. 13.13(b)

(ii) Consider the F.B.D. of block *A*

$\sum F_y = ma_y$

$4T - 7 \times 9.81 = 7a_A$

$a_A = 0.5714T - 9.81$ ..... (II)

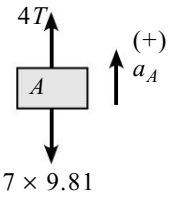

F.B.D. of Block *A*

(iii) Consider the F.B.D. of block *B*

$\sum F_y = ma_y$

$4 \times 9.81 - T = 4a_B$

$a_B = 9.81 - 0.25T$ ..... (III)

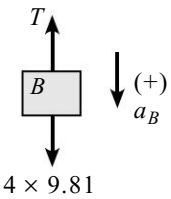

F.B.D. of Block *B*

(v) Putting Eqs. (II) and (III) in Eq. (I),

$4(0.5714T - 9.81) - (9.81 - 0.25T) = 0$

$2.286T - 39.24 - 9.81 + 0.25T = 0$

$T = 19.34$ N (Tension in cord attached to block A)

$4T = 77.36$ N (Tension in cord attached to block B)

(vi) From Eqs. (II) and (III), we get

$a_A = 0.5714 \times 19.34 - 9.81$

$a_A = 1.241$ m/s^2 (↑)

$a_B = 9.81 - 0.25 \times 19.34$

$a_B = 4.975$ m/s^2 (↓)

Problem 14

Block A = 100 kg shown in Fig. 13.14(a) is observed to move upward with an acceleration of 1.8 m/s^2. Determine **(i)** mass of block B, and **(ii)** the corresponding tension in the cable.

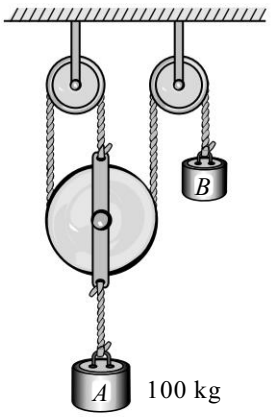

Fig. 13.14(a)

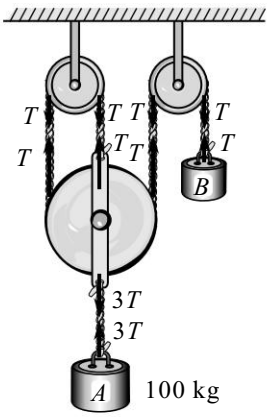

Fig. 13.14(b)

Solution

(i) Kinematic relation [Fig. 13.14(b)]

Work done by internal forces = 0

$3Tx_A - Tx_B = 0$

$3x_A = x_B$

Differentiating w.r.t. t,

$3v_A = v_B$

Differentiating w.r.t. t,

$3a_A = a_B$

$\therefore\ a_B = 3 \times 1.8 \qquad (\because\ a_A = 1.8 \text{ m/s}^2)$

$a_B = 5.4 \text{ m/s}^2$

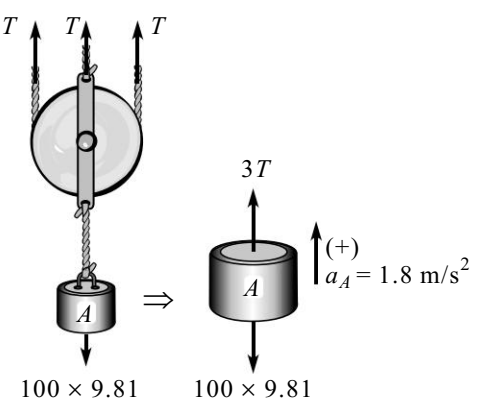

Fig. 13.14(c) : F.B.D. of Block *A*

(ii) Consider the F.B.D. of block *A* [Fig. 13.14(c)]

By Newton's second law, we have

$\sum F_y = ma_y$

$3T - 100 \times 9.81 = 100 \times 1.8$

$T = 387$ N

(iii) Consider the F.B.D. of block *B* [Fig. 13.14(d)]

By Newton's second law, we have

$\sum F_y = ma_y$

$m_B \times 9.81 - T = m_B \times a_B$

$m_B\,(9.81 - 5.4) = 387$

$m_B = 87.76$ kg

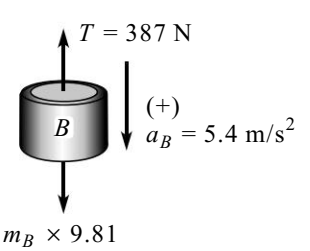

Fig. 13.14(d) : F.B.D. of Block *B*

Problem 15

In the system shown in Fig. 13.15(a), the pulleys are to be considered massless and frictionless. The masses in kg are the numbers 1, 2, 3 and 4. Determine the acceleration of each mass and the tension in the fixed cord.

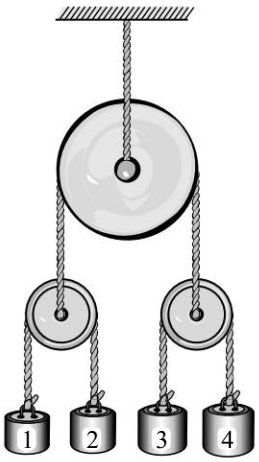

Fig. 13.15(a)

Solution

(i) Kinematic relation [Fig. 13.15(b)]

Since it is difficult to predict the direction of motion, we can assume the direction of motion because there is no friction involved.

If the answer obtained is +ve, it means our assumption is correct. If answer obtained is –ve, it means wrong assumed direction and correct direction will be opposite to assumed direction.

Let us assume all blocks are moving upward.

Work done by internal force = zero

$Tx_1 + Tx_2 + Tx_3 + Tx_4 = 0$

$x_1 + x_2 + x_3 + x_4 = 0$

Differentiating twice w.r.t. t, we get

$a_1 + a_2 + a_3 + a_4 = 0$ ..... (I)

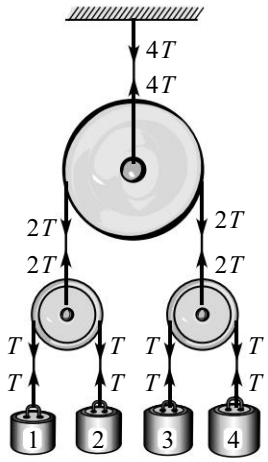

Fig. 13.15(b)

(ii) Consider the F.B.D. of 1 kg block [Fig. 13.15(c)]

By Newton's second law, we have

$\sum F_y = ma_y$

$T - 1 \times 9.81 = 1 \times a_1$

$\therefore\ a_1 = T - 9.81$ ..... (II)

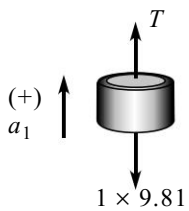

Fig. 13.15(c) : F.B.D. of Block 1 kg

(iii) Consider the F.B.D. of 2 kg block [Fig. 13.15(d)]

By Newton's second law, we have

$\sum F_y = ma_y$

$T - 2 \times 9.81 = 2a_2$

$\therefore\ a_2 = 0.5T - 9.81$ ..... (III)

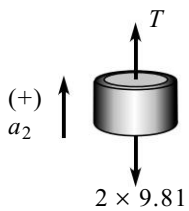

Fig. 13.15(d) : F.B.D. of Block 2 kg

(iv) Consider the F.B.D. of 3 kg block [Fig. 13.15(e)]

By Newton's second law, we have

$\sum F_y = ma_y$

$T - 3 \times 9.81 = 3a_3$

$\therefore\ a_3 = 0.33T - 9.81$ ..... (IV)

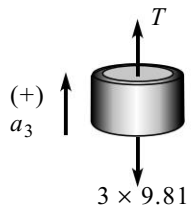

Fig. 13.15(e) : F.B.D. of Block 3 kg

(v) Consider the F.B.D. of 4 kg block [Fig. 13.15(f)]

By Newton's second law, we have

$\sum F_y = ma_y$

$T - 4 \times 9.81 = 4a_4$

$\therefore\ a_4 = 0.25T - 9.81$ ..... (V)

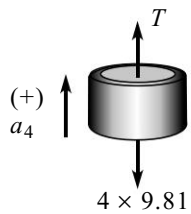

Fig. 13.15(f) : F.B.D. of Block 4 kg

(vi) Putting values of Eqs. (II), (III), (IV) and (V) in Eq. (I),

$(T - 9.81) + (0.5T - 9.81) + (0.33\,T - 9.81) + (0.25T - 9.81) = 0$

$T = 18.83$ N

(vi) Acceleration of blocks

$a_1 = 9.02$ m/s^2 (↑)

$a_2 = -0.38$ m/s^2 (Wrong assumed direction)

$a_2 = 0.38$ m/s^2 (↓)

$a_3 = -3.52$ m/s^2 (Wrong assumed direction)

$a_3 = 3.52$ m/s^2 (↓)

$a_4 = -5.12$ m/s^2 (Wrong assumed direction)

$a_4 = 5.12$ m/s^2 (↓)

Tension in fixed cord $4T = 75.32$ N

Problem 16

Determine the acceleration of block B. Also, determine its displacement after 1 s if the system starts from rest. Recalulate the above values if block A is replaced by an equivalent force. Assume frictionless pulleys for the system shown in Fig. 13.16(a).

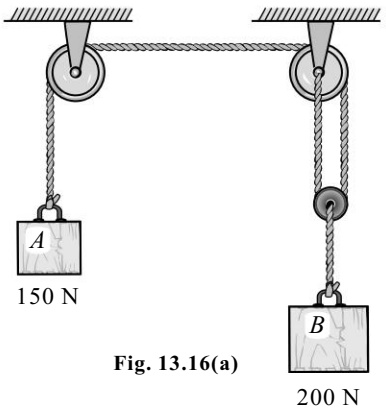

Fig. 13.16(a)

Solution

Part I

(i) Kinematic relation [Fig. 13.16(b)]

Total work done by internal force (Tension) = 0

$\therefore\ 2Tx_B - Tx_A = 0$

$2x_B = x_A$

Differentiating w.r.t. t,

$2v_B = v_A$

Differentiating w.r.t. t again,

$2a_B = a_A$ ..... (I)

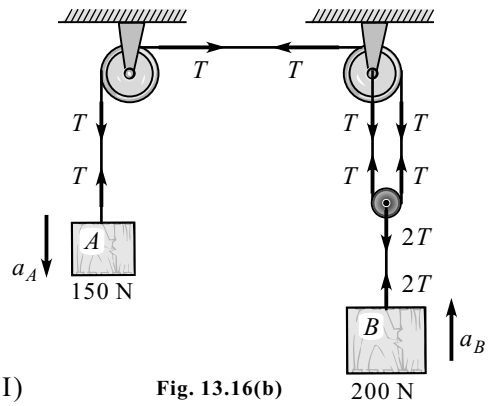

Fig. 13.16(b)

(ii) Consider the F.B.D. of block *A*

Refer to Fig. 13.16(c).

By Newton's second law, we have

$\sum F_y = ma_y$

$150 - T = \frac{150}{9.81} \times a_A$

$T = 150 - \frac{150}{9.81} \times a_A$ ..... (II)

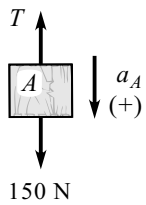

Fig. 13.16(c) : F.B.D. of Block *A*

(iii) Consider the F.B.D. of block *B*

Refer to Fig. 13.16(d).

By Newton's second law, we have

$\sum F_y = ma_y$

$2T - 200 = \frac{200}{9.81} \times a_B$

$T = \frac{100}{9.81} \times a_B + 100$ ..... (III)

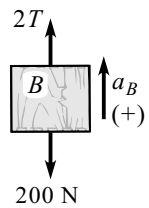

Fig. 13.16(*d*) : F.B.D. of Block *B*

(iv) Equating Eqs. (II) and (III), we get

$150 - \frac{150}{9.81} \times a_A = \frac{100}{9.81} \times a_B + 100$

$150 - 100 = \frac{100}{9.81} \times a_B + \frac{150}{9.81} \times 2a_B$

$50 = 40.775\ a_B$

$a_B = 1.226\ \text{m/s}^2\ (\uparrow)$

(v) Displacement of block *B* after 1 s

$s = ut + \frac{1}{2}at^2$

$s = 0 + \frac{1}{2} \times 1.226 \times 1^2$

$s = 0.613$ m

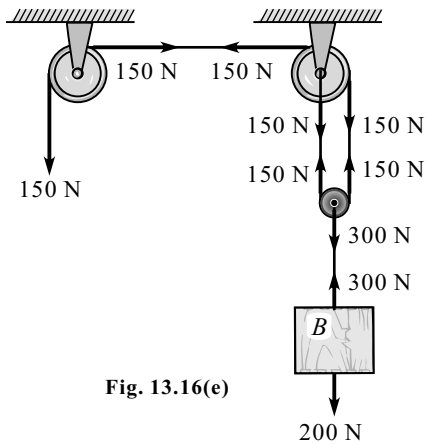

Fig. 13.16(e)

Part II

(vi) Recalulate above values if block A is replaced by an equivalent force (150 N).

(iii) Consider the F.B.D. of block *B*

Refer to Fig. 13.16(f).

By Newton's second law, we have

$$300 - 200 = \frac{200}{9.81} \times a_B$$

$$a_B = 4.905 \text{ m/s}^2 \ (\uparrow)$$

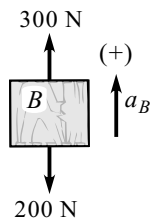

Fig. 13.16(*f*) : F.B.D. of Block *B*

(v) Displacement of block *B* after 1 s

$$s = ut + \frac{1}{2}at^2$$

$$s = 0 + \frac{1}{2} \times 4.905 \times 1^2$$

$$s = 2.4525 \text{ m}$$

Problem 17

Determine the weight W required to be attached to 150 N block to bring the system in Fig. 13.17(a) to stop in 5 s if at any stage 500 N is moving down at 3 m/s. Assume pulley to be frictionless and massless.

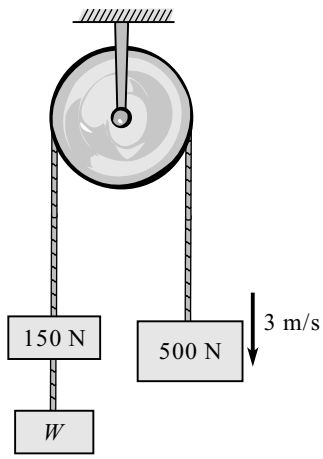

Fig. 13.17(a)

Solution

(i) $v = u + at$

$0 = 3 + a \times 5$

$\therefore \ a = -0.6 \text{ m/s}^2$

(ii) Consider the F.B.D. of 500 N block

By Newton's second law, we have

$$T - 500 = \frac{500}{9.81} a$$

$$T = \frac{500 \times 0.6}{9.81} + 500$$

$$T = 530.58 \text{ N}$$

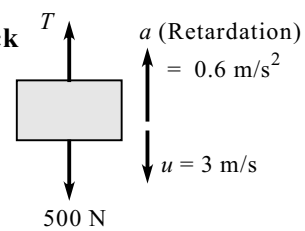

Fig. 13.17(b) : F.B.D. of 500 N Block

(ii) Consider the F.B.D. of (150 + *W*) block together [Fig. 13.17(c)]

By Newton's second law, we have

$$(150 + W) - T = \left[\frac{150 + W}{9.81}\right] a$$

$$(150 + W) - 530.58 = \left[\frac{150 + W}{9.81}\right] 0.6$$

$$W = 415.15 \text{ N}$$

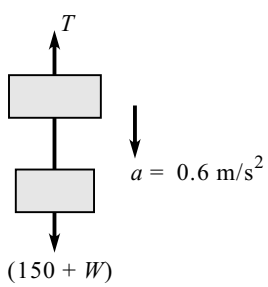

Fig. 13.17(c) : F.B.D. of Block (150 + *W*)

Problem 18

At a given instant the 50 N block A is moving downward with a speed of 1.8 m/s. Determine its speed 2 s later. Block B has a 20 N weight, and the coefficient of kinetic friction between it and the horizontal plane is $\mu_k = 0.2$. Neglect the mass of pulley's and chord. Use D'Alemberts principle.

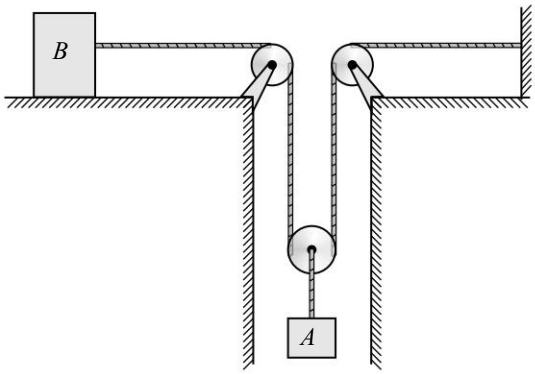

Fig. 13.18(a)

Solution

(i) Kinematic relation [Fig. 13.18(b)]

$Tx_B - 2Tx_A = 0$

$x_B - 2x_A = 0$

Differentiating w.r.t. t,

$v_B - 2v_A = 0$

Differentiating w.r.t. t again,

$a_B - 2a_A = 0$

$a_B = 2a_A$ ..... (I)

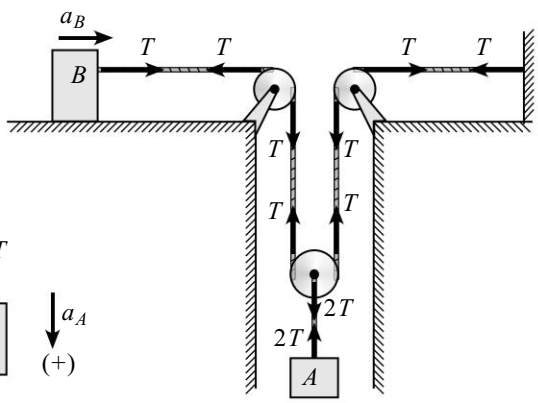

Fig. 13.18(b)

(ii) Consider the F.B.D. of block *A*

By D'Alemberts principle, we have

$\sum F_y + (-ma_y) = 0$

$50 - 2T - \frac{50}{9.81} a_A = 0$

$T = 25 - 2.548\, a_A$ ..... (II)

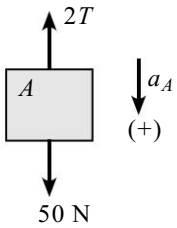

F.B.D. of Block *A*

(iii) Consider the F.B.D. of block *B*

By D'Alemberts principle, we have

$\sum F_x + (-ma_x) = 0$

$T - 0.2N - \frac{20}{9.81} a_B = 0$

$T - 0.2 \times 20 - \frac{20}{9.81} a_B = 0$

$T = 4 + 2.039\, a_B$ ..... (III)

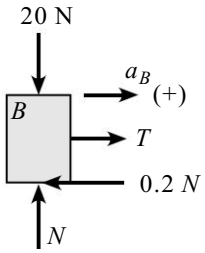

F.B.D. of Block *B*

(iv) Equating Eqs. (II) and (III),

$25 - 2.548\, a_A = 4 + 2.039\, a_B$

$2.548\, a_A + 2.039(2a_A) = 25 - 4$

$6.626\, a_A = 21$

$a_A = 3.169 \text{ m/s}^2 \ (\downarrow)$

(v) Speed = ? after 2 s

$v = u + at$

$v_A = 1.8 + 3.169 \times 2 = 8.138 \text{ m/s} \ (\downarrow)$

Problem 19

Two blocks, shown in Fig. 13.19(a) start from rest. If the cord is inextensible, friction and inertia of pulley are negligible, calculate acceleration of each block and tension in each cord. Consider coefficient of friction as 0.25.

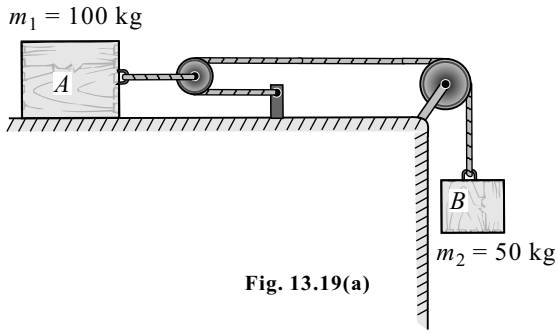

Fig. 13.19(a)

Solution

(i) Kinematic relation [Fig. 13.19(b)]

Work done by internal forces = 0

$2T \times x_1 - Tx_2 = 0$

$2x_1 = x_2$

Differentiating w.r.t. t,

$2v_1 = v_2$

Differentiating w.r.t. t again,

$2a_1 = a_2$

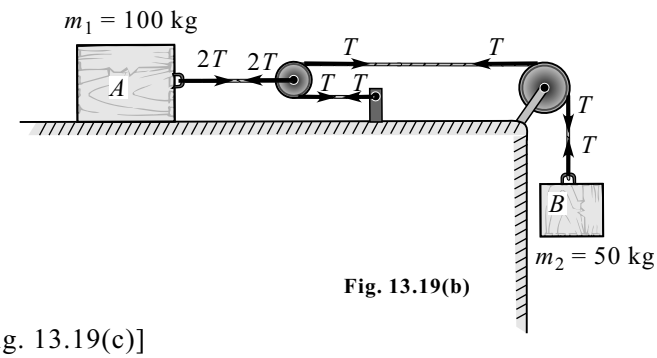

Fig. 13.19(b)

(ii) Consider the F.B.D. of block m_1 [Fig. 13.19(c)]

By Newton's second law, we have

$\sum F_y = ma_y = 0 \quad (\because a_y = 0)$

$N_1 - 100 \times 9.81 = 0$

$N_1 = 981$ N

$\sum F_x = ma_x$

$2T - \mu N_1 = 100a_1$

$2T - 0.25 \times 981 = 100a_1$

$T = 122.625 + 50a_1$ ..... (I)

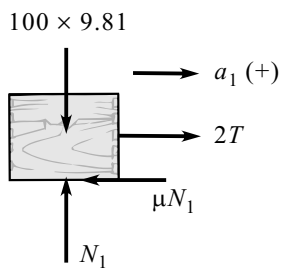

Fig. 13.19(c) : F.B.D. of Block m_1

(iii) Consider the F.B.D. of block m_2 [Fig. 13.19(d)]

By Newton's second law, we have

$\sum F_y = ma_y$

$50 \times 9.81 - T = 50a_2$

$T = 490.5 - 100a_2$ ..... (II)

Solving Eqs. (I) and (II), we get

$T = 245.25$ N; $\quad a_1 = 2.45$ m/s^2

$2T = 490.5$ N; $\quad a_2 = 4.9$ m/s^2

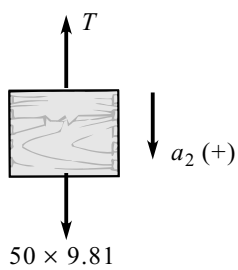

Fig. 13.19(d) : F.B.D. of Block m_2

Problem 20

A system shown in Fig. 13.20(a) is at rest initially. Neglecting friction determine velocity of block A after it has moved 2.7 m when pulled by a force of 90 N.

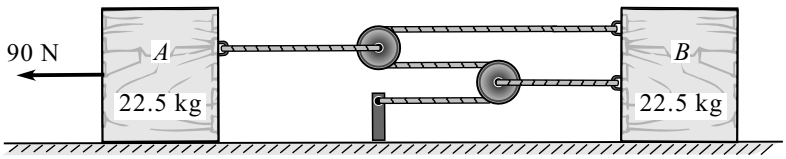

Fig. 13.20(a)

Solution

(i) Kinematic relation [Fig. 13.20(b)]

Work done by internal forces = 0

$\therefore\ 3Tx_B - 2Tx_A = 0$

$3x_B = 2x_A$

Differentiating w.r.t. t,

$3v_B = 2v_A$

Differentiating w.r.t. t,

$3a_B = 2a_A$

$a_B = \frac{2}{3} a_A$

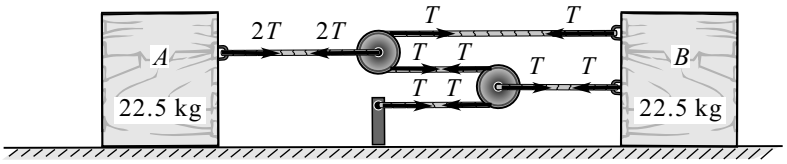

Fig. 13.20(b)

(ii) Consider the F.B.D. of block *A* [Fig. 13.20(c)]

By Newton's second law, we have

$\sum F_y = ma_y = 0 \qquad (\because\ a_y = 0)$

$N_A - 22.5 \times 9.81 = 0$

$N_A = 22.5 \times 9.81 = 220.725$ N

$\sum F_x = ma_x$

$90 - 2T = 22.5 \times a_A$ ..... (I)

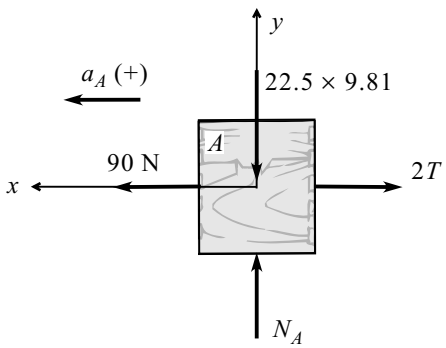

Fig. 13.20(c) : F.B.D. of Block *A*

(iii) Consider the F.B.D. of block *B* [Fig. 13.20(d)]

By Newton's second law, we have

$\sum F_y = ma_y \qquad (\because\ a_y = 0)$

$N_B - 22.5 \times 9.81 = 0 \quad \therefore\ N_B = 220.725$ N

$\sum F_x = ma_x$

$T + 2T = 22.5 \times a_B$

$3T = 22.5a_B$

$T = \frac{22.5a_B}{3}$ ..... (II)

Putting Eq. (II) in Eq. (I),

$90 - 2\left(\frac{22.5a_B}{3}\right) = 22.5a_A$

From kinematic relation $a_B = \frac{2}{3} a_A$

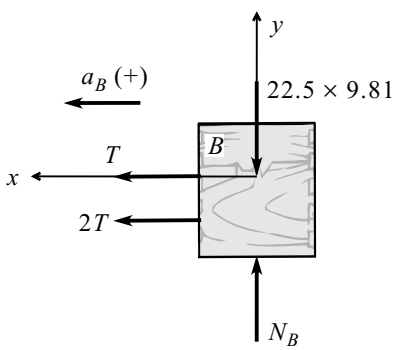

Fig. 13.20(d) : F.B.D. of Block *B*

$$90 - 2 \times \frac{22.5}{3} \times \frac{2}{3} a_A = 22.5 a_A$$

$$90 = 32.5 a_A$$

$$a_A = 2.77 \text{ m/s}^2$$

$$a_B = \frac{2}{3} a_A = \frac{2}{3} \times 2.77 \quad \therefore \; a_B = 1.85 \text{ m/s}^2$$

(iv) $x_A = 2.7$ m; $a_A = 2.77$ m/s^2, $u = 0$

$$v^2 = u^2 + 2as = 0 + 2 \times 2.77 \times 2.7$$

$$v = 3.87 \text{ m/s}$$

Problem 21

Masses $A = 5$ kg, $B = 10$ kg and $C = 20$ kg are connected as shown in Fig. 13.21(a) by inextensible cord passing over massless and frictionless pulleys. The coefficients of friction for masses A and B and ground is 0.2. If the systems is released from rest, find the acceleration. a_A, a_B and a_C and tension T in the cord. Present your answer in tabular form.

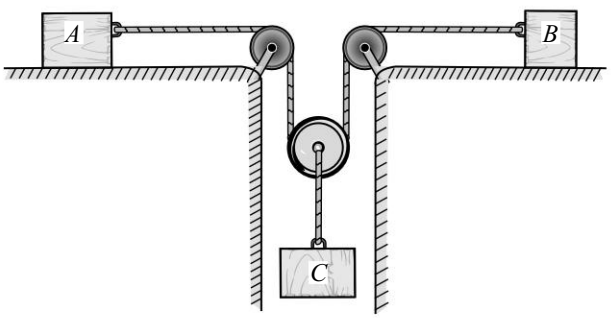

Fig. 13.21(a)

Solution

(i) Kinematic relation [Fig. 13.21(b)]

$$Tx_A + Tx_B - 2Tx_C = 0$$

$$x_A + x_B - 2x_C = 0$$

Differentiating w.r.t. t,

$$v_A + v_B - 2v_C = 0$$

Differentiating w.r.t. t again,

$$a_A + a_B - 2a_C = 0$$

$$a_C = \frac{a_A + a_B}{2}$$

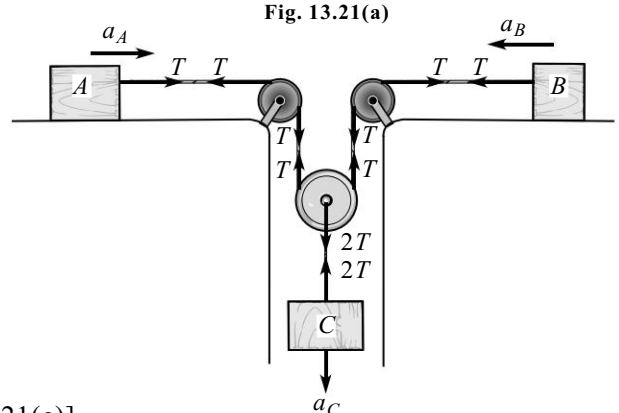

Fig. 13.21(b)

(ii) Consider the F.B.D. of block *A* [Fig. 13.21(c)]

By Newton's second law, we have

$$\sum F_y = ma_y = 0 \qquad (\because \; a_y = 0)$$

$$N_A - 5 \times 9.81 = 0 \qquad \therefore \; N_A = 49.05 \text{ N}$$

$$\sum F_x = ma_x$$

$$T - \mu N_A = 5 \times a_A$$

$$T - 0.2 \times 49.05 = 5a_A$$

$$T - 9.81 = 5a_A$$

$$a_A = \frac{T - 9.81}{5} \qquad \ldots\ldots \text{ (I)}$$

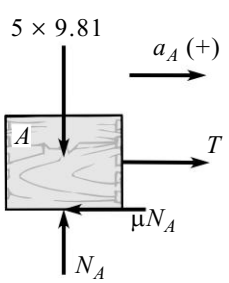

Fig. 13.21(c) : F.B.D. of Block *A*

(iii) Consider the F.B.D. of block *B* [Fig. 13.21(d)]

By Newton's second law, we have

$\sum F_y = ma_y = 0 \qquad (\because a_y = 0)$

$N_B - 10 \times 9.81 = 0$

$N_B = 98.1$ N

$\sum F_x = ma_x$

$T - \mu N_B = 10a_B$

$T - 0.2 \times 98.1 = 10a_B$

$T - 19.62 = 10a_B$

$$a_B = \frac{T - 19.62}{10} \qquad \text{..... (II)}$$

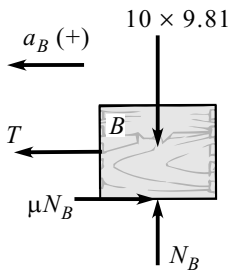

Fig. 13.21(d) : F.B.D. of Block *B*

(iv) Consider the F.B.D. of block *C* [Fig. 13.21(e)]

By Newton's second law, we have

$\sum F_y = ma_y$

$20 \times 9.81 - 2T = 20a_C$

$$20 \times 9.81 - 2T = 20\left[\frac{a_A + a_B}{2}\right]$$

$$196.2 - 2T = 10(a_A + a_B) \qquad \text{..... (III)}$$

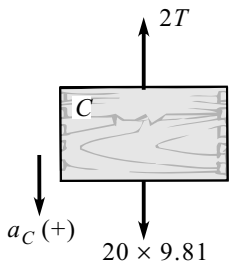

Fig. 13.21(e) : F.B.D. of Block *C*

Putting Eqs. (I) and (II) in (III),

$$196.2 - 2T = 10\left[\left(\frac{T - 9.81}{5}\right) + \left(\frac{T - 19.62}{10}\right)\right]$$

$196.2 - 2T = 2(T - 9.81) + (T - 19.62)$

$5T = 235.44$

$T = 47.09$ N

From Eq. (I),

$$a_A = \frac{47.09 - 9.81}{5} = 7.456 \text{ m/s}^2$$

From Eq. (II),

$$a_B = \frac{47.09 - 19.62}{10} = 2.75 \text{ m/s}^2$$

From kinematic relation,

$$a_C = \frac{a_A + a_B}{2} = \frac{7.456 + 2.75}{2} = 5.103 \text{ m/s}^2$$

a_A	a_B	a_C	T
7.456 m/s^2	2.75 m/s^2	5.103 m/s^2	47.09 N

Problem 22

Block A of 400 kg mass is being pulled up the inclined plane by using another block B of 800 kg mass as shown in Fig. 13.22(a). Determine the acceleration of block B and tension in rope pulling the block A. Take $\mu_k = 0.2$. Assume ropes are inextensible and pulleys are small, frictionless and massless.

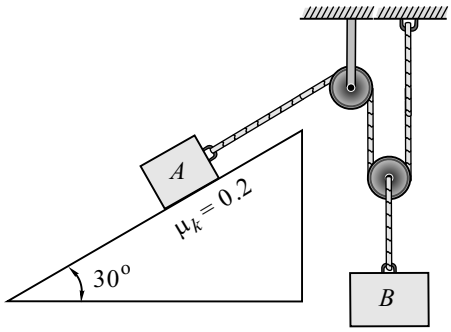

Fig. 13.22(a)

Solution

(i) Kinematic relation [Fig. 13.22(b)]

By virtual work principle, we have

Total virtual work done by internal forces (tension) = 0

$Tx_A - 2Tx_B = 0$

$x_A = 2x_B$

Differentiating w.r.t. t,

$v_A = 2v_B$

Differentiating w.r.t. t again,

$a_A = 2a_B$ ..... (I)

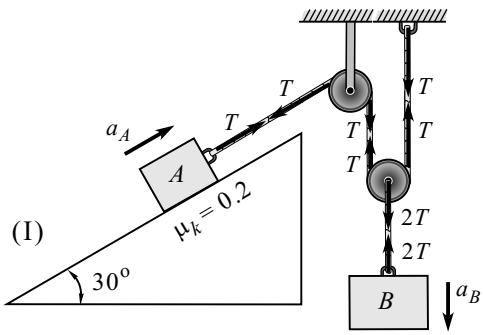

Fig. 13.22(b)

(ii) Consider the F.B.D. of block *A* [Fig. 13.22(c)]

By Newton's second law, we have

$\sum F_x = ma_x$

$T - 0.2\,N - 400 \times 9.81 \sin 30^\circ = 400 \times a_A$

$T - 0.2 \times 400 \times 9.81 \cos 30^\circ - 400 \times 9.81 \sin 30^\circ = 400a_A$

$T = 400a_A + 2641.66$ ..... (II)

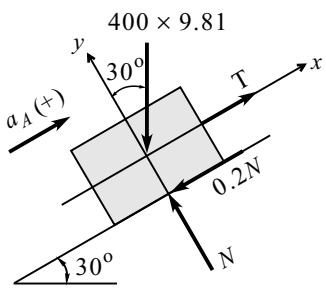

Fig. 13.22(c) : F.B.D. of Block *A*

(iii) Consider the F.B.D. of block *B* [Fig. 13.22(d)]

By Newton's second law, we have

$\sum F_y = ma_y$

$800 \times 9.81 - 2T = 800a_B$

$2T = 800 \times 9.81 - 800a_B$

$T = 3924 - 400a_B$ ..... (III)

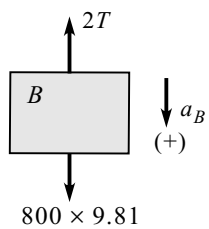

Fig. 13.22(d) : F.B.D. of Block *B*

(iv) From Eq. (II) and (III), we have

$400a_A + 2641.66 = 3924 - 400a_B$

$400a_A + 400 \times \dfrac{a_A}{2} = 3924 - 2641.66$ ..... {from Eq. (I)}

$600a_A = 1282.34$

$a_A = 2.137 \text{ m/s}^2 \; (\measuredangle 30^\circ)$

$T = 3496.55 \text{ N} \quad \therefore \; 2T = 6993.12 \text{ N}$

Problem 23

Masses A (5 kg), B (10 kg), C (20 kg) are connected as shown in the Fig. 13.23(a) by inextensible cord passing over massless and frictionless pulleys. The coefficient of friction for masses A and B with ground is 0.2. If the system is released from rest, find the acceleration of the blocks and tension in the cords.

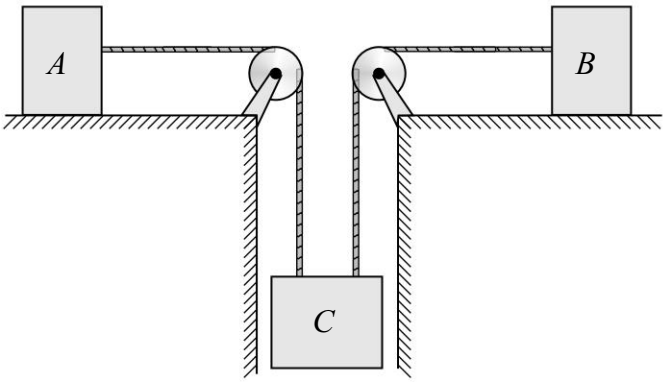

Fig. 13.23(a)

Solution

(i) Kinematic relation [Fig. 13.23(b)]

All the three blocks are connected directly to each other.

$\therefore$ Acceleration of all the three blocks will be same.

$a_A = a_B = a_C = a$ ..... (I)

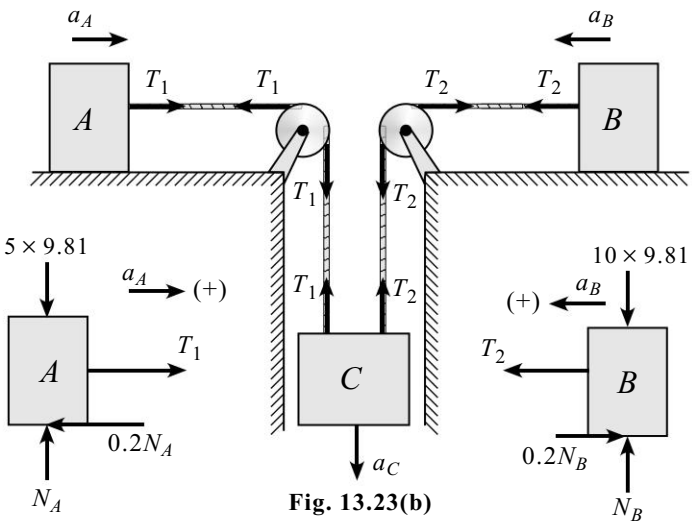

Fig. 13.23(b)

(ii) Consider the F.B.D. of block *A*

By Newton's second law, we have

$\sum F_x = ma_x$

$T_1 - 0.2N_A = 5a_A$

$T_1 - 0.2 \times 5 \times 9.81 = 5a_A$

$T_1 = 5a_A + 9.81$ ..... (II)

(iii) Consider the F.B.D. of block *B*

By Newton's second law, we have

$\sum F_x = ma_x$

$T_2 - 0.2N_B = 10a_B$

$T_2 = 0.2 \times 10 \times 9.81 + 10a_B$

$T_2 = 19.62 + 10a_B$ ..... (III)

(iv) Consider the F.B.D. of block *C* [Fig. 13.23(c)]

By Newton's second law, we have

$20 \times 9.81 - T_1 - T_2 = 20a_C$

From Eq. (II) and (III),

$20 \times 9.81 - 5a - 9.81 - 19.62 - 10a = 20a_C$

$35a = 166.77$

$a = 4.765 \text{ m/s}^2$

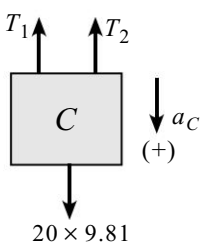

Fig. 13.23(c)

(v) Substituting the value of a in Eqs. (II) and (III), we get

$T_1 = 5 \times 4.765 + 9.81$ $\quad$ $T_2 = 19.62 + 10 \times 4.765$

$T_1 = 33.63$ N $\quad$ $T_2 = 67.27$ N

Problem 24

The system shown in Fig. 13.24(a) is released from rest. What is the height lost by the bodies A, B and C in 2 seconds. Take coefficient of kinetic friction at the rubbing surface as 0.4. Find also the tension T_A and T_B in the wires. Assume pulleys weightless and frictionless.

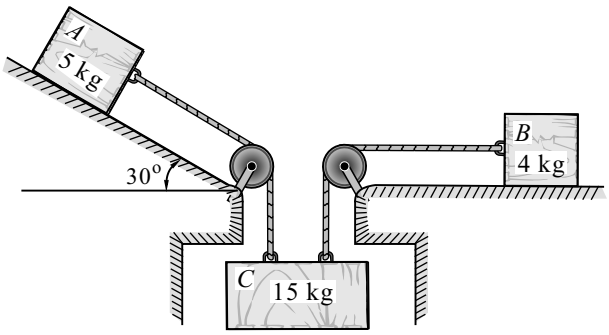

Fig. 13.24(a)

Solution

(i) Kinematic relation

Since all the three blocks are connected directly to each other.

$\therefore$ Acceleration of all the three blocks will be same.

$a_A = a_B = a_C = a$

(ii) Consider the F.B.D. of block *A* [Fig. 13.24(b)]

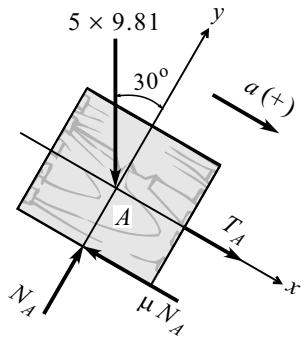

Fig. 13.24(b) : F.B.D. of Block *A*

By Newton's second law, we have

$\sum F_y = ma_y = 0 \qquad (\because a_y = 0)$

$N_A - 5 \times 9.81 \cos 30^\circ = 0$

$N_A = 42.48$ N

$\sum F_x = ma_x$

$T_A - \mu N_A + 5 \times 9.81 \sin 30^\circ = 5 \times a$

$T_A - 0.4 \times 42.48 + 5 \times 9.81 \sin 30^\circ = 5a$

$T_A = 5a - 7.533 \qquad \text{..... (I)}$

(iii) Consider the F.B.D. of block *B* [Fig. 13.24(c)]

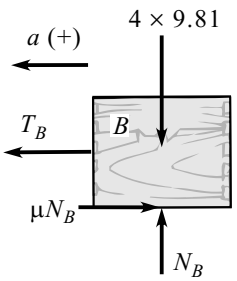

Fig. 13.24(c) : F.B.D. of Block *B*

By Newton's second law, we have

$\sum F_y = ma_y = 0 \qquad (\because a_y = 0)$

$N_B - 4 \times 9.81 = 0$

$N_B = 39.24$ N

$\sum F_x = ma_x$

$T_B - \mu N_B = 4 \times a$

$T_B - 0.4 \times 39.24 = 4a$

$T_B = 4a + 15.696 \qquad \text{..... (II)}$

(iv) Consider the F.B.D. of block *C* [Fig. 13.24(d)]

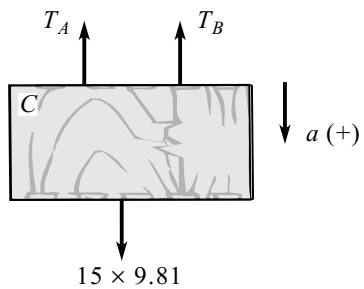

Fig. 13.24(d) : F.B.D. of Block *C*

By Newton's second law, we have

$\sum F_y = ma_y$

$15 \times 9.81 - T_A - T_B = 15 \times a \qquad \text{..... (III)}$

Putting Eqs. (I) and (II) in (III),

$147.15 - (5a - 7.533) - (4a + 15.696) = 15a$

$24a = 138.987$

$a = 5.79 \text{ m/s}^2$

From Eq. (I),

$T_A = 5 \times 5.79 - 7.533$

$T_A = 21.42 \text{ N}$

From Eq. (II),

$T_B = 4 \times 5.79 + 15.696$

$T_B = 38.856 \text{ N}$

(v) Height lost by Block *C* in 2 s

$$s = ut + \frac{1}{2}at^2$$

$$h_C = 0 \times 2 + \frac{1}{2} \times 5.79 \times 2^2$$

$$h_C = 11.57 \text{ m}$$

$\because$ Block A is directly connected to block C.

$\therefore$ Distance moved by blocks A and C will be same.

But block A is on inclined plane.

$\therefore$ Height lost by the block A, $h_A = 11.57 \sin 30$

$h_A = 5.785 \text{ m}$

$\because$ Block B is moving on a horizontal plane.

$\therefore$ Height lost by block B, $h_B = 0$.

Problem 25

Figure 13.25(a) shows two masses $m_1 = 1$ kg and $m_2 = 2$ kg connected by a rope and the rope passing over two smooth pulleys P_1 and P_2. Mass $m_3 = 5$ kg is supported from the movable pulley P_2. If the inclination of the inclined plane is α, where $\tan \alpha = \frac{3}{4}$ and coefficient of friction is 0.1, determine the motion of the system, neglecting the weight of pulley P_2.

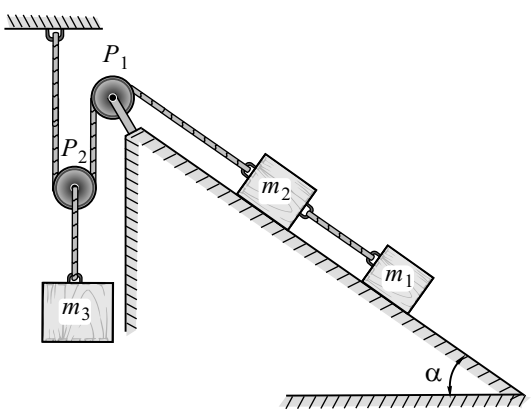

Fig. 13.25(a)

Solution

(i) Kinematic relation [Fig. 13.25(b)]

Blocks m_1 and m_2 are directly connected to each other so their acceleration will be same

$\therefore a_1 = a_2$

Work done by internal forces = 0

$T_2 x_2 - 2T_2 x_3 = 0$

$x_2 = 2x_3$

Differentiating w.r.t. t,

$v_2 = 2v_3$

Differentiating w.r.t. t again,

$a_2 = 2a_3$

$\therefore\ a_1 = a_2 = 2a_3$

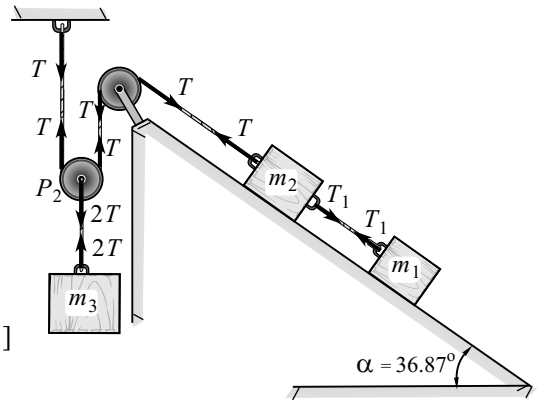

Fig. 13.25(b)

(ii) Consider the F.B.D. of block m_1 [Fig. 13.25(c)]

By Newton's second law, we have

$\sum F_y = ma_y = 0 \qquad (\because\ a_y = 0)$

$N_1 - 1 \times 9.81 \cos\alpha = 0$

$N_1 = 7.848$ N

$\sum F_x = ma_x$

$T_1 - \mu N_1 - 1 \times 9.81 \sin\alpha = 1 \times a_1$

$T_1 - 0.1 \times 7.848 - 1 \times 9.81 \sin 36.87^\circ = a_1$

$T_1 = 6.6708 + a_1 \qquad \ldots\ldots \text{(I)}$

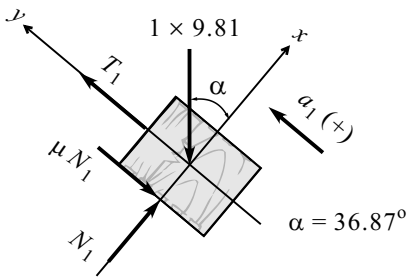

Fig. 13.25(c) : F.B.D. of Block m_1

(iii) Consider the F.B.D. of block m_3 [Fig. 13.25(d)]

By Newton's second law, we have

$\sum F_y = ma_y$

$5 \times 9.81 - 2T_2 = 5 \times a_3$

$T_2 = 24.525 - 2.5a_3$

$T_2 = 24.525 - 1.25a_1 \qquad \ldots\ldots \text{(II)}$

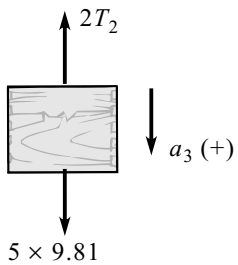

Fig. 13.25(d) : F.B.D. of Block m_3

(iv) Consider the F.B.D. of block m_2 [Fig. 13.25(e)]

By Newton's second law, we have

$\sum F_y = ma_y = 0 \qquad (\because\ a_y = 0)$

$N_2 - 2 \times 9.81 \cos\alpha = 0$

$N_2 = 15.7$ N

$\sum F_x = ma_x$

$T_2 - T_1 - \mu N_2 - 2 \times 9.81 \sin\alpha = 2 \times a_2$

$T_2 - T_1 - 0.1 \times 15.7 - 2 \times 9.81 \sin 36.87^\circ = 2a_1 \qquad \ldots\ldots \text{(III)}$

Putting Eqs. (I) and (II) in Eq. (III),

$(24.525 - 1.25\,a_1) - (6.6708 + a_1) - 13.34 = 2a_1$

$\therefore\ a_1 = 1.06$ m/s^2

$\therefore\ a_3 = \dfrac{1.06}{2} = 0.53$ m/s^2

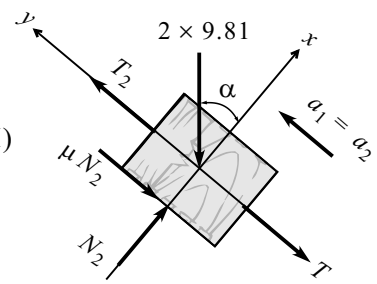

Fig. 13.25(e) : F.B.D. of Block m_2

Problem 26

Determine the acceleration of 100 N weight shown in Fig. 13.26(a) after the motion has begun. Also, calculate the tension in the strings. Assume that pulleys are frictionless.

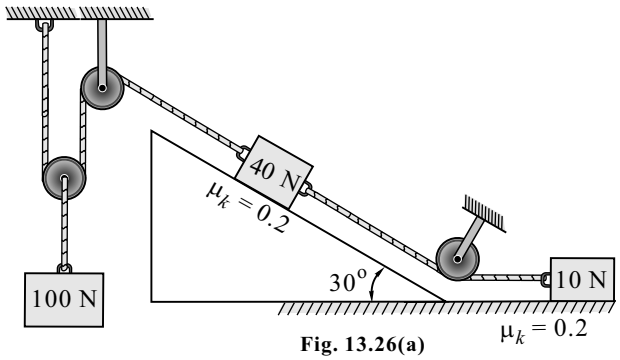

Fig. 13.26(a)

Solution

(i) Kinematic relation [Fig. 13.26(b)]

Since blocks A and B are directly connected,

$$x_A = x_B$$
$$v_A = v_B$$
$$\therefore \; a_A = a_B$$

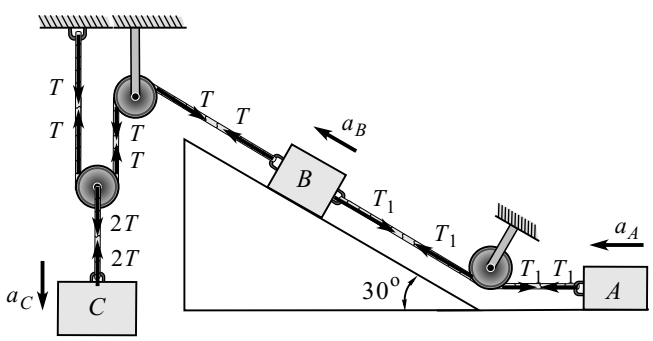

Fig. 13.26(b)

By virtual work principle, we have

Total virtual work done by internal forces (tension) = 0

$$T_1 x_A - T_1 x_B + T x_B - 2T x_C = 0$$

$$T x_B = 2T x_C \quad (\because x_A = x_B)$$

$$x_B = 2x_C$$

Differentiating w.r.t. t,

$$v_B = 2v_C$$

Differentiating w.r.t. t again,

$$a_B = 2a_C$$

$$\therefore \; a_A = a_B = 2a_C \quad (\because a_A = a_B) \qquad \text{..... (I)}$$

(ii) Consider the F.B.D. of block *A* [Fig. 13.26(c)]

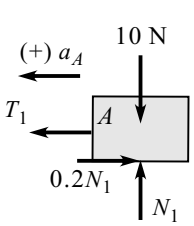

Fig. 13.26(c) : F.B.D. of Block *A*

By Newton's second law, we have

$$T_1 - 0.2N_1 = \frac{10}{9.81} a_A$$

$$T_1 = \frac{10}{9.81} a_A + 0.2 \times 10 \qquad \text{..... (II)}$$

(iii) Consider the F.B.D. of block *C* [Fig. 13.26(d)]

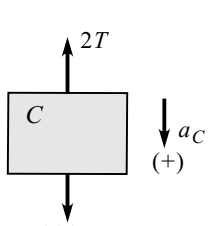

Fig. 13.26(d) : F.B.D. of Block *C*

By Newton's second law, we have

$$100 - 2T = \frac{100}{9.81} a_C$$

$$T = 50 - \frac{50}{9.81} a_C \qquad \text{..... (III)}$$

(iv) Consider the F.B.D. of block *B* [Fig. 13.26(e)]

By Newton's second law, we have

$$T - T_1 - 0.2\,N_2 - 40 \sin 30^\circ = \frac{40}{9.81}\,a_B$$

$$T - T_1 - 0.2 \times 40 \cos 30^\circ - 40 \sin 30^\circ = \frac{40}{9.81}\,a_B$$

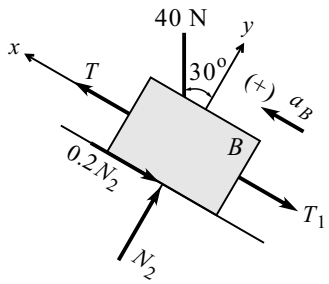

Fig. 13.26(e) : F.B.D. of Block *B*

(v) From Eqs. (II) and (III), we have

$$\left(50 - \frac{50}{9.81}\,a_C\right) - \left(\frac{10}{9.81}\,a_A + 0.2 \times 10\right) - 0.2 \times 40 \cos 30^\circ - 40 \sin 30^\circ = \frac{40}{9.81}\,a_B$$

$$a_A = 2.756 \text{ m/s}^2 \quad (\because a_A = a_B = 2a_C)$$

$$a_C = 1.378 \text{ m/s}^2$$

From Eq. (III), we have

$$T = 50 - \frac{50}{9.81} \times 1.378$$

$$\therefore\ T = 42.98 \text{ N}$$

Problem 27

Block *A* has a mass of 30 kg and block *B* has a mass of 20 kg. $\mu_S = 0.2$ and $\mu_K = 0.15$. The arrangement of blocks are shown in Fig. 13.27(a). Determine **(i)** the minimum force *F* that has to be applied on block *A* to develop the impending motion, and **(ii)** the acceleration of block *A* if applied force *F* = 400 N.

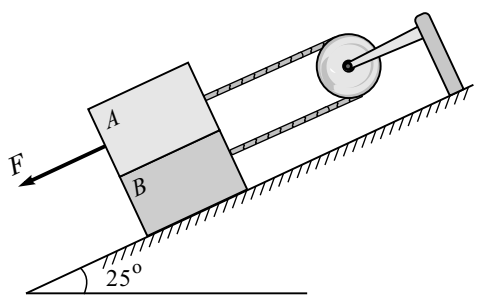

Fig. 13.27(a)

Solution

Part I

(i) For impending motion

Consider the system to be in limiting equilibrium condition.

Consider the F.B.D. of block *A* [Refer to Fig. 13.27(b)]

$$\Sigma F_y = 0$$

$$N_1 = 30 \times 9.81 \cos 25^\circ$$

$$N_1 = 266.73 \text{ N}$$

$$\Sigma F_x = 0$$

$$F - T + 30 \times 9.81 \sin 25^\circ - 0.2N_1 = 0$$

$$T = F + 30 \times 9.81 \sin 25^\circ - 0.2 \times 266.73$$

$$T = F - 71.03 \qquad \text{..... (I)}$$

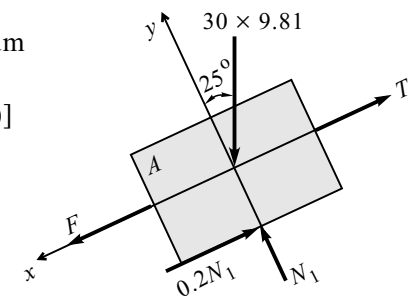

Fig. 13.27(b) : F.B.D. of block *A*

(ii) Consider the F.B.D. of block *B* [Refer to Fig. 13.27(c)]

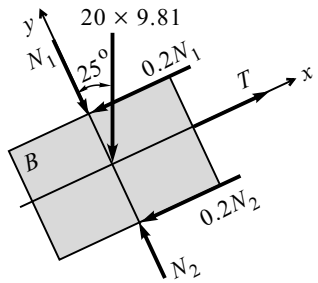

Fig. 13.27(c) : F.B.D. of block *B*

$\Sigma F_y = 0$

$N_2 = N_1 + 20 \times 9.81 \cos 25^\circ$

$N_2 = 266.73 + 20 \times 9.81 \cos 25^\circ$

$N_2 = 444.54$ N

$\Sigma F_x = 0$

$T - 0.2N_1 - 0.2N_2 - 20 \times 9.81 \sin 25^\circ = 0$

$T = 0.2 \times 266.73 + 0.2 \times 444.54 + 20 \times 9.81 \sin 25^\circ$

$T = 225.17$ N

Putting the value of T in Eq. (I), we get

$225.17 = F - 71.03$

$F = 296.2$ N

$\therefore$ Force required to develop the impending motion is $F = 296.2$ N $\left(25^\circ \swarrow\right)$

Part II : To find acceleration when $F = 400$ and $\mu_k = 0.15$

(iii) Consider the F.B.D. of block *A* [Refer to Fig. 13.27(d)]

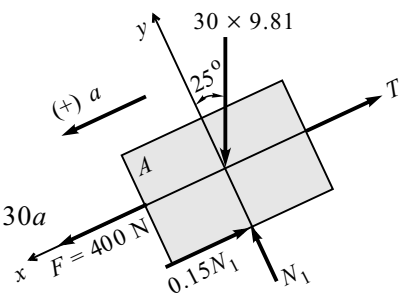

Fig. 13.27(d) : F.B.D. of block *A*

By Newton's second law, we have

$\Sigma F_x = ma_x$

$400 - T - 0.15N_1 + 30 \times 9.81 \sin 25^\circ = 30a$

$400 - T - 0.15 \times 30 \times 9.81 \cos 25^\circ + 30 \times 9.81 \sin 25^\circ = 30a$

$400 - T - 40 + 124.38 = 30a$

$T = 484.38 - 3a$ ..... (II)

(iv) Consider the F.B.D. of block *B* [Refer to Fig. 13.27(e)]

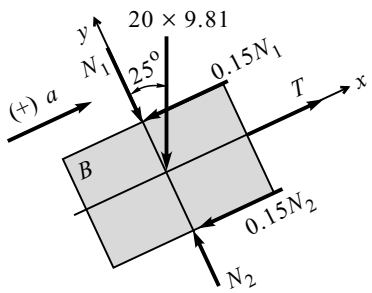

Fig. 13.27(e) : F.B.D. of block *B*

By Newton's second law, we have

$T - 0.15N_1 - 0.15N_2 - 20 \times 9.81 \sin 25^\circ = 20a$

$T - 0.15 \times 30 \times 9.81 \cos 25^\circ - 0.15 \times 20 \times 9.81 \cos 25^\circ$
$\quad - 20 \times 9.81 \sin 25^\circ = 20a$

From Eq. (II), we get

$484.38 - 3a - 40 - 26.67 - 82.92 = 20a$

$23a = 334.79$

$\therefore a = 14.56$ m/s^2

$\because$ Blocks A and B are directly connected.

$\therefore a_A = a_B = 14.56$ m/s^2

$\therefore$ Acceleration of block A if applied force $F = 400$ N will be $a = 14.56$ m/s^2 $\left(25^\circ \swarrow\right)$

Problem 28

If the coefficients of static and kinetic frictions between 20 kg block A and 100 kg block B are both essentially the same value of 0.5 and there is no friction between wheels of cart B and surface, determine the acceleration of each part for **(i)** P = 60 N, and **(ii)** P = 40 N. Assume pulley to be massless and frictionless.

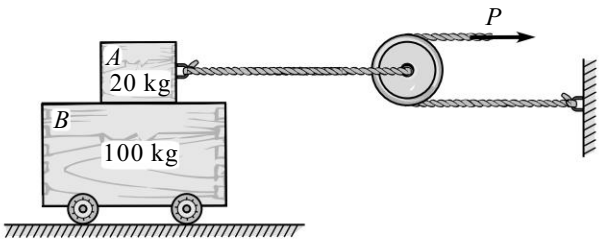

Fig. 13.28(a)

Solution

Case I : $P = 60$ N

(i) Static analysis

Consider the F.B.D. of block A [Fig. 13.28(b)].

Let F_A be the required frictional force for maintaining the equilibrium.

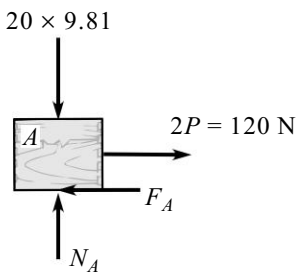

Fig. 13.28(b) : F.B.D. of Block *A*

$\sum F_y = 0$

$N_A - 20 \times 9.81 = 0$

$N_A = 196.2$ N

$\sum F_x = 0$

$120 - F_A = 0$

$F_A = 120$ N

For limiting equilibrium condition, we have

$F_{\max} = \mu_s N$

$F_{\max} = 0.5 \times 196.2$

$F_{\max} = 98.1$N

$\because F_A > F_{\max}$

There is a relative motion between blocks A and B.

(ii) Kinetic analysis

Consider the F.B.D. of block A [Fig. 13.28(c)].

By Newton's second law, we have

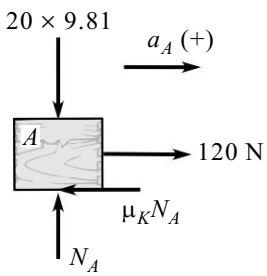

Fig. 13.28(c) : F.B.D. of Block *A*

$\sum F_y = ma_y = 0 \quad (\because a_y = 0)$

$N_A - 20 \times 9.81 = 0$

$N_A = 196.2$ N

$\sum F_x = ma_x$

$120 - \mu_k N_A = 20 \times a_A$

$120 - 0.5 \times 196.2 = 20\, a_A$

$a_A = 1.095$ m/s^2

(iii) Consider the F.B.D. of block *B* [Fig. 13.28(d)]

By Newton's second law, we have

$\sum F_x = ma_x$

$\mu_k N_A = 100\ a_B$

$0.5 \times 196.2 = 100\ a_B$

$a_B = 0.981\ \text{m/s}^2$

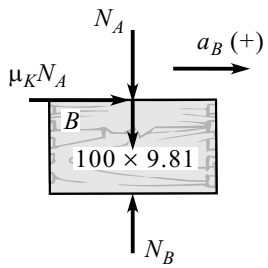

Fig. 13.28(d) : F.B.D. of Block *B*

Case II : $P = 40$ N

(i) Static analysis

Let F_A be the required frictional force to maintain the equilibrium.

Consider F.B.D. of block *A* [Fig. 13.28(e)].

$\sum F_y = 0$

$N_A - 20 \times 9.81 = 0$

$N_A = 196.2$ N

$\sum F_x = 0$

$80 - F_A = 0$

$F_A = 80$ N

For limiting equilibrium condition, we have

$F_{max} = \mu_s N$

$F_{max} = 0.5 \times 196.2$

$F_{max} = 98.1$ N

$\because F_A < F_{max}$

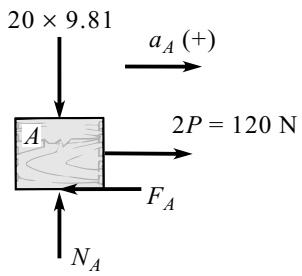

Fig. 13.28(e) : F.B.D. of Block *A*

Block *A* is in static equilibrium condition,
i.e., there is no relative motion between two blocks *A* and *B*.

$\therefore$ Both the blocks will move together.

(iii) Dynamic analysis

Consider the F.B.D. both the blocks together [Fig. 13.28(f)].

By Newton's second law, we have

$\sum F_x = ma_x$

$80 = (20 + 100)\ a$

$a = 0.67\ \text{m/s}^2$

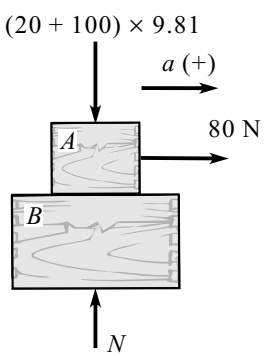

Fig. 13.28(f) : F.B.D. of Blocks *A* and *B* Together

Solved Problems Based on Curvilinear Motion

Problem 29

The pendulum bob has a mass m and is released from rest when $\theta = 0^o$ as shown in Fig. 13.29(a). For any position B of the pendulum, determine **(i)** the tangential component of acceleration a_t and obtain its velocity v by integration, and **(ii)** the value of θ at which the cord will break knowing that it can withstand a maximum tension equal to twice the weight of the pendulum bob. Take length of cord l and neglect the size of the bob.

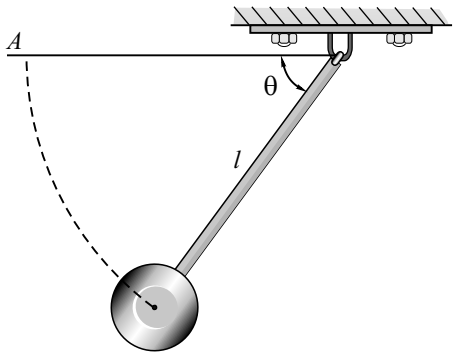

Fig. 13.29(a)

Solution

Consider the F.B.D. of bob at position *B* [Fig. 13.29(b)]

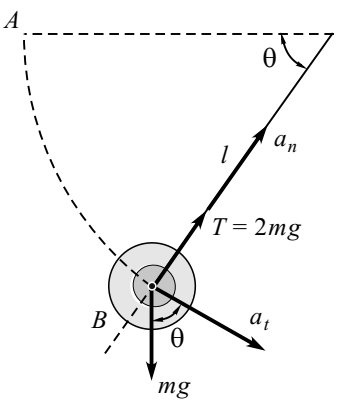

Fig. 13.29(b) : F.B.D. of Bob at Position *B*

$$\sum F_y = ma_t$$

$$mg \cos\theta = ma_t$$

$$a_t = g \cos\theta$$

$$v \frac{dv}{ds} = g \cos\theta$$

$$v\, dv = g \cos\theta\, ds$$

Integrating $v\, dv = g \cos\theta\, (l\, d\theta) \quad (\because\ ds = l\, d\theta)$

$$\int v\, dv = \int gl \cos\theta\, d\theta$$

$$\frac{v^2}{2} = gl \sin\theta + c$$

At $v = 0,\ u = 0 \quad \therefore\ c = 0$

$$v^2 = 2gl \sin\theta$$

$$v = \sqrt{2gl \sin\theta}$$

$$\sum F_n = ma_n = m\frac{v^2}{l} \qquad (\because\ l = \text{radius of curvature})$$

$$T - mg \sin\theta = m\frac{v^2}{l}$$

$$2mg - mg \sin\theta = \frac{m}{l}(2gl \sin\theta)$$

$$2 - \sin\theta = 2 \sin\theta$$

$$2 = 3 \sin\theta$$

$$\sin\theta = \frac{2}{3} \qquad \therefore\ \theta = 41.81^o$$

Thus, at $\theta = 41.81^o$, the cord will break.

Problem 30

Two wires AC and BC are tied at C to a sphere of 5 kg mass which revolves at a constant speed v in the horizontal circle of 1.5 m radius as shown in Fig. 13.30(a). Determine the minimum and maximum value of v if both the wires are to remain taut and tension in either of the wires is not to exceed 70 N.

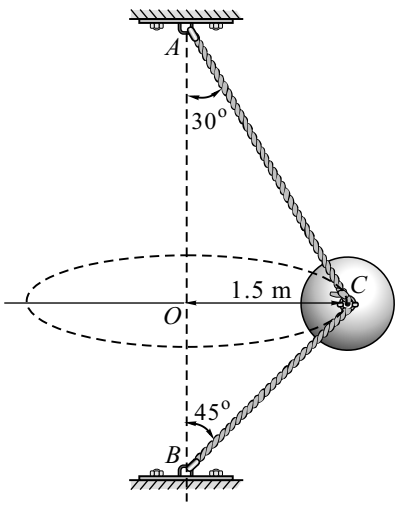

Fig. 13.30(a)

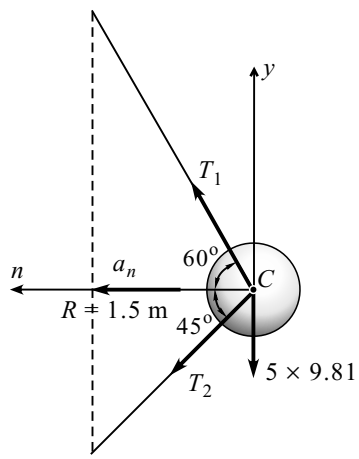

Fig. 13.30(b) : F.B.D. of Sphere *C*

Solution

Consider the F.B.D. of the sphere *C* [Fig. 13.30(b)]

$\sum F_y = ma_y = 0 \qquad (\because a_y = 0)$

$T_1 \sin 60^\circ - T_2 \sin 45^\circ - 5 \times 9.81 = 0$ ..... (I)

$\sum F_n = ma_n = m \dfrac{v^2}{R}$

$T_1 \cos 60^\circ + T_2 \cos 45^\circ = \dfrac{5 \times v^2}{1.5}$ ..... (II)

The arrangement is such that T_1 is always greater than T_2

For minimum velocity, $T_2 = 0$

From Eq. (I), we get

$T_1 = 56.64$ N

From Eq. (II), we get

$v_{min} = 2.914$ m/s

For maximum velocity, $T_1 = 70$ N (given)

From Eq. (I), we get

$T_2 = 16.36$ N

From Eq. (II), we get

$v_{max} = 3.74$ m/s

Problem 31

A small block rests on a turntable in Fig. 13.31(a), which starting from rest, is rotated in such a way that the block undergoes a constant tangential acceleration $a_t = 1.8$ m/s^2. Determine how long will it take for the block to start slipping on the turn table and the speed v of the block at that instant. The block is at 0.7 m from the centre of the table and the coefficient of friction is 0.6.

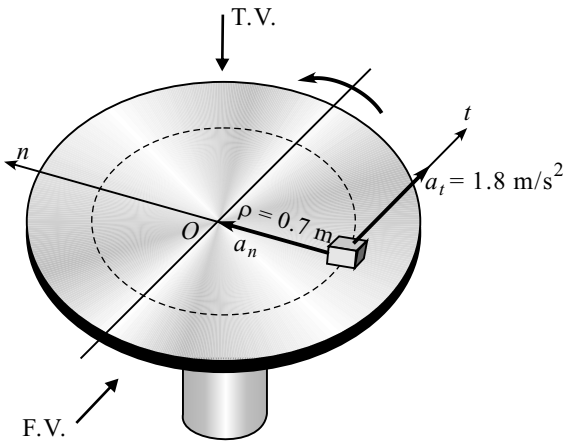

Fig. 13.31(a)

Solution

(i) Consider the F.B.D. of the block (front view)

[Refer to Fig. 13.31(b)]

$\sum F_z = ma_z = 0 \quad (\because a_z = 0)$

$N - mg = 0$

$N = mg$

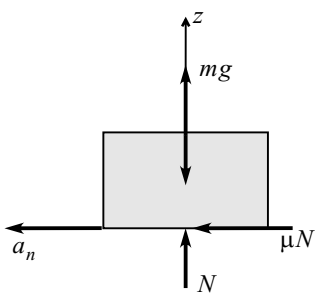

Fig. 13.31(b) : F.B.D. of Block

(ii) In limiting equilibrium condition, the block is about to slip.

By Newton's second law,

$F = ma$

$\mu_s N = ma$

$0.6(m \times 9.81) = ma$

$a = 5.886$ m/s^2

(iii) $a = \sqrt{a_t^2 + a_n^2}$

$5.886 = \sqrt{1.8^2 + a_n^2}$

$a_n = 5.604$ m/s^2

(iv) $a_n = \dfrac{v^2}{\rho}$

$5.604 = \dfrac{v^2}{0.7}$

$\therefore v = 1.981$ m/s

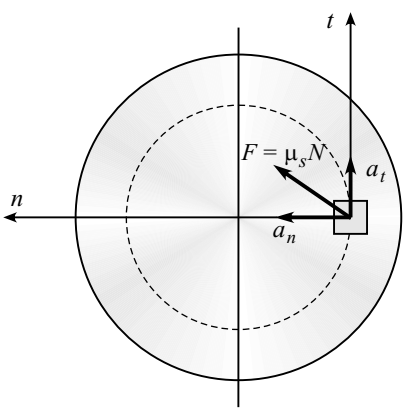

Fig. 13.31(c) : TopView

(v) To determine time, we have

$v = u + a_t t$

$1.981 = 0 + 1.8 \times t$

$\therefore t = 1.1$ s

Problem 32

An automobile weighing 12 kN is moving with uniform speed of 72 kmph. Over a vertical curve *ABC* of parabolic shape. Determine the total pressure exerted by the wheels of the automobile as it passes the topmost point *B* as shown in Fig. 13.32(a).

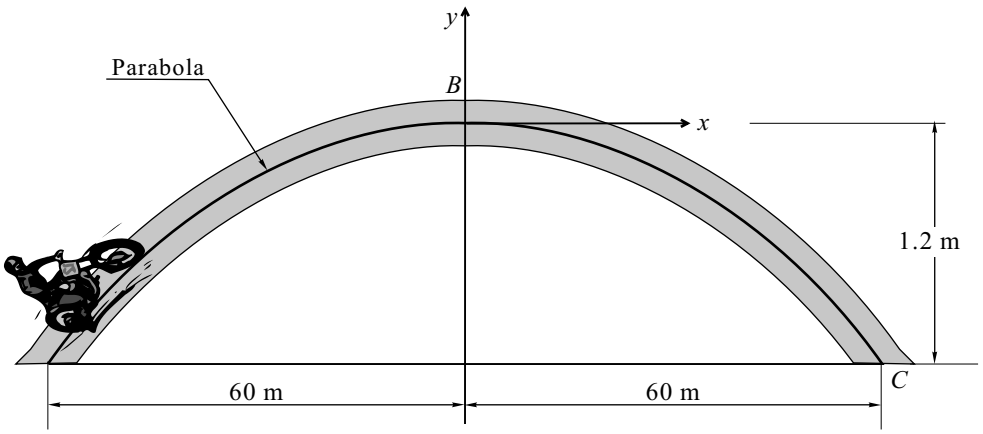

Fig. 13.32(a)

Solution

We know, equation of parabola is $x^2 = -ky \quad \therefore \; y = -\dfrac{x^2}{k}$

Coordinate of point *C* (60, –1.5)

$$-1.5 = -\frac{60^2}{k}$$

$$k = 3000$$

$$\therefore \; y = -\frac{x^2}{3000}$$

$$\frac{dy}{dx} = \frac{-2x}{3000} = \frac{-2}{3000} = \frac{-1}{1500}$$

At point *B*, slope, i.e., $\dfrac{dy}{dx} = 0$

$$\text{Radius of curvature } R = \left| \frac{\left[1 + \left(\dfrac{dy}{dx}\right)^2\right]^{3/2}}{\dfrac{d^2y}{dx^2}} \right| = \left| \frac{\left[1 + (0)^2\right]^{3/2}}{-\dfrac{1}{1500}} \right|$$

$$R = 1500 \text{ m}$$

Consider the F.B.D. of automobile at point *B* [Fig. 13.32(b)]

$$\Sigma F_n = ma_n = \frac{mv^2}{R}$$

$$12 \times 10^3 - N = \frac{12 \times 10^3}{9.81} \times \frac{20^2}{1500}$$

$$N = 326.2 \text{ N}$$

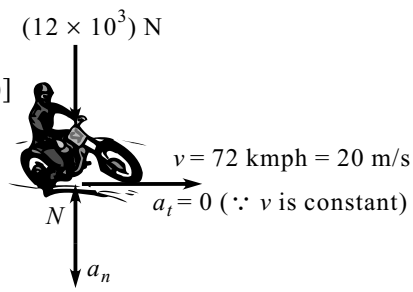

Fig. 13.32(b) : F.B.D. of Automobile at Point *B*

Problem 33

A small sphere of weight W is held as shown in Fig. 13.33(a) by two wires AB and CD. Determine the tension in the wires AB and CD. Also determine the acceleration of the sphere and tension in wire CD, if the wire AB is cut.

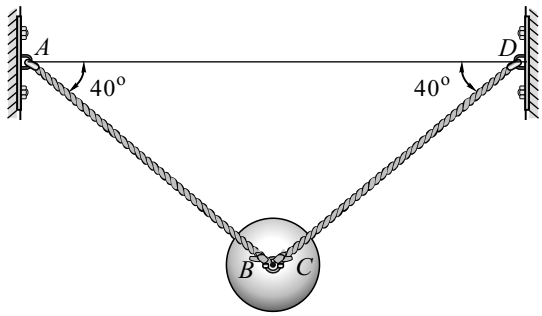

Fig. 13.33(a)

Solution

(i) Static analysis [Refer to Fig. 13.33(b)]

Consider the F.B.D. of sphere

$\sum F_x = 0$

$T_{CD} \cos 40^\circ - T_{BA} \cos 40^\circ = 0$

$T_{CD} = T_{BA}$

$\sum F_y = 0$

$T_{BA} \sin 40^\circ + T_{CD} \sin 40^\circ - W = 0$

$2\, T_{BA} \sin 40^\circ = W$

$T_{BA} = T_{CD} = 0.778\, W$

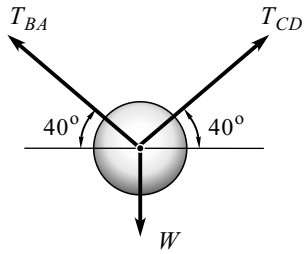

Fig. 13.33(b) : F.B.D. of Sphere

(ii) Dynamic analysis [Refer to Fig. 13.33(c)]

Consider the F.B.D. of sphere at the instant when wire AB is cut, the sphere is going to perform curvilinear motion in vertical plane.

$\because$ Initial velocity is zero,

$\therefore\ a_n = \dfrac{v^2}{R} = 0$

$\sum F_t = ma_t$

$mg \sin 50^\circ = ma_t$

$a_t = 7.515 \text{ m/s}^2$

$\sum F_n = ma_n = 0$

$T_{CD} - mg \cos 50^\circ = 0$

$T_{CD} = 0.643\, W$

Acceleration $a = \sqrt{a_t^2 + a_n^2}$

$\therefore\ a = 7.515 \text{ m/s}^2$

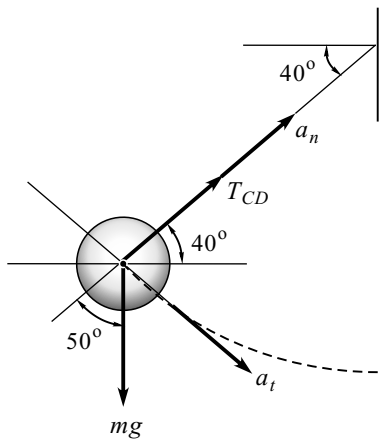

Fig. 13.33(c) : F.B.D. of Sphere (Wire *AB* is Cut)

Problem 34

A van of 1000 kg mass travels at constant speed along a vertical curve as shown in Fig. 13.34(a). Find the maximum speed at which the van may travel so that it would remain in contact with the road at all time. At this speed, find the reaction from the ground when the van reaches point *B*.

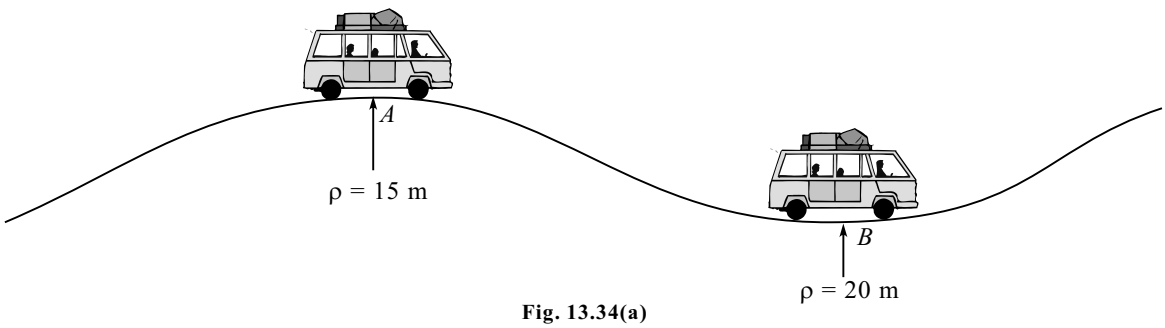

Fig. 13.34(a)

Solution

(i) Van is performing curvilinear motion

At position *A* draw F.B.D. [Refer to Fig. 13.34(b)].

By Newton's second law, we have

$$\sum F_x = ma_x = \frac{mv^2}{\rho}$$

$$1000 \times 9.81 - N = \frac{1000 \times v^2}{15}$$

[$N = 0$ because van is just in contact and about to jump limiting condition]

$$v^2 = 9.81 \times 15$$

$$v = 12.13 \text{ m/s}$$

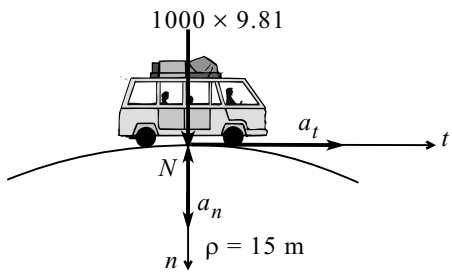

Fig. 13.34(b) : F.B.D. at Position *A*

(ii) Consider the F.B.D. at position *B* [Refer to Fig. 13.34(c)]

By Newton's second law, we have

$$\sum F_x = ma_x = \frac{mv^2}{\rho}$$

$$N - 1000 \times 9.81 = \frac{1000 \times 12.13^2}{20}$$

$$N = 17166.85 \text{ N}$$

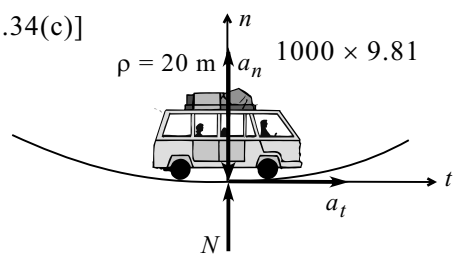

Fig. 13.34(c) : F.B.D. at Position *B*

Problem 35

A 10 kg sphere is connected to two strings as shown in Fig. 13.35(a). The mass is revolving in the horizontal plane around a vertical axis. Find the range of speeds that the mass can have if both the strings need to remain taut. $AC = 2$ m.

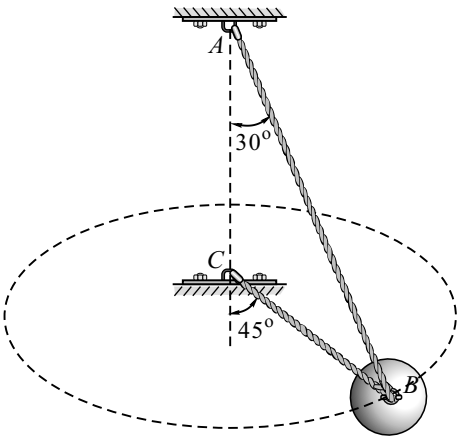

Fig. 13.35(a)

Solution

(i) In ΔABC, by sine rule

$$\frac{2}{\sin 15^\circ} = \frac{AB}{\sin 135^\circ} = \frac{BC}{\sin 30^\circ}$$

$$AB = 5.464 \text{ m and } BC = 3.864 \text{ m}$$

For radius of rotation ρ,

$$\cos 45^\circ = \frac{\rho}{BC} \quad \therefore \ \rho = 2.732 \text{ m}$$

(ii) **Consider the F.B.D. of the sphere** [Refer to Fig. 13.35(b)]

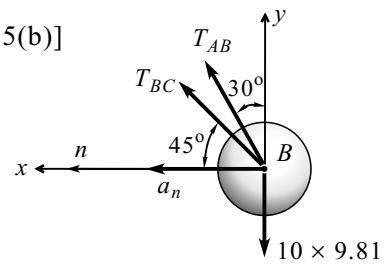

Fig. 13.35(b) : F.B.D. of Sphere

By Newton's second law, we have

$$\sum F_y = ma_y = 0 \quad (\because a_y = 0)$$

$$T_{AB} \cos 30^\circ + T_{BC} \sin 45^\circ = 10 \times 9.81 \qquad \text{..... (I)}$$

$$\sum F_n = ma_n = \frac{mv^2}{\rho}$$

$$T_{BC} \cos 45^\circ + T_{AB} \sin 30^\circ = \frac{10 \times v^2}{2.732} \qquad \text{..... (II)}$$

(iii) For maximum speed (v_{max}) tension in string AB would become slack,

i.e., at $T_{AB} = 0 \quad v \Rightarrow v_{max}$

For minimum speed (v_{min}) tension in string BC would become slack,

i.e., at $T_{BC} = 0 \quad v \Rightarrow v_{min}$

(iv) For v_{max}, from Eq. (I),

$$0 + T_{BC} \sin 45^\circ = 10 \times 9.81 \quad \therefore \ T_{BC} = 138.73 \text{ N}$$

From Eq. (II), we get

$$138.73 \cos 45^\circ + 0 = \frac{10 \times (v_{max})^2}{2.732}$$

$$\therefore \ v_{max} = 5.177 \text{ m/s}$$

(v) For v_{min}, from Eq. (I),

$$T_{AB} \cos 30^\circ + 0 = 10 \times 9.81 \quad \therefore \ T_{AB} = 113.28 \text{ N}$$

From Eq. (II), we get

$$0 + 113.28 \sin 30^\circ = \frac{10 \times (v_{min})^2}{2.732}$$

$$\therefore \ v_{min} = 3.934 \text{ m/s}$$

Problem 36

A bucket filled with coloured water is tied to a 1.6 m long inextensible string and whirled such that the string makes an angle of 30° with the vertical as the bucket revolves with a constant speed in a horizontal circle as shown in Fig. 13.36(a). A small hole punched in a bucket causes the coloured water to drip forming a circle of some radius on the ground. Find the radius of circle formed by coloured water. Consider the string tied to ceiling above the ground at height 4 m.

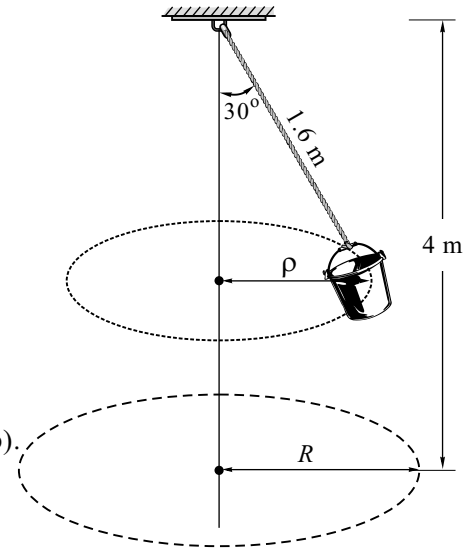

Fig. 13.36(a)

Solution

(i) Horizontal circular motion of bucket

Consider the F.B.D. of bucket as shown in Fig. 13.36(b).

By Newton's second law, we have

$$\sum F_y = ma_y = 0 \quad (\because a_y = 0)$$

$$T \sin 60^\circ = mg \quad \therefore \quad T = \frac{mg}{\sin 60^\circ}$$

$$\sum F_x = ma_x = \frac{mv^2}{\rho} \qquad \left[\sin 30^\circ = \frac{\rho}{1.6} \quad \therefore \rho = 0.8 \text{ m}\right]$$

$$T \cos 60^\circ = \frac{mv^2}{0.8}$$

$$\frac{mg}{\sin 60^\circ} \cos 60^\circ = \frac{mv^2}{0.8}$$

$$\therefore \quad v = 2.129 \text{ m/s}$$

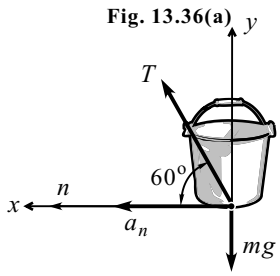

Fig. 13.36(b) : F.B.D. of Bucket

(ii) Motion of dripping water

Since the bucket is performing horizontal circular motion with constant velocity $v = 2.129$ m/s. Dripping water will have some velocity in horizontal direction and further motion of water drops will be projectile motion.

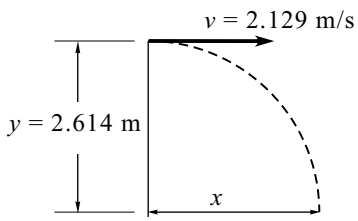

Fig. 13.36(c) : Front View

Projectile motion : $y = 4 - 1.386 = 2.614$ m,

$x = ?$, $v = 2.129$ m/s and $\theta = 0$.

By general equation of projectile motion, we have

$$y = x \tan\theta - \frac{gx^2}{2v^2}(1 + \tan^2\theta)$$

$$-2.614 = x \tan 0^\circ - \frac{9.81x^2}{2 \times 2.129^2}(1 + \tan^2 0^\circ)$$

$$\therefore \quad x = 1.554 \text{ m}$$

$$R = \sqrt{(0.8)^2 + (1.554)^2} \quad \Rightarrow \quad R = 1.748 \text{ m}$$

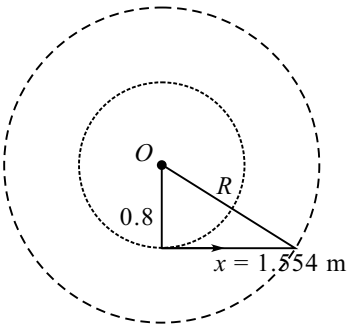

Fig. 13.36(d) : Top View

Note : Inner circle is formed by revolving bucket and outer circle is formed by dripping water.

Problem 37

Link AB = 4 m is rotating about point A with constant angular velocity ω r/s as shown in Fig. 13.37(a). The end B is having a horizontal platform where a block is kept with weight W and it remains horizontal throughout the rotation. Find the maximum angular velocity of link AB at which the block is at the verge of sliding on the platform and the corresponding angle θ of link AB with horizontal. Assume $\mu_s = 0.4$.

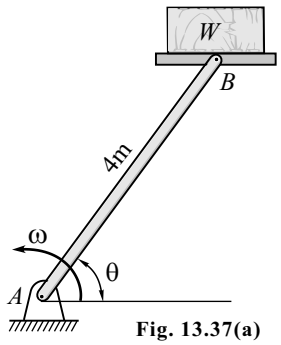

Fig. 13.37(a)

Solution

(i) Consider the F.B.D. of block having weight *W*

[Refer to Fig. 13.37(b)]

By Newton's second law, we have

$$\sum F_x = ma_x$$

$$\mu_s N = ma_t \sin\theta + ma_n \cos\theta$$

$$a_t = 0 \; (\because \text{ speed is constant})$$

$$a_n = \frac{v^2}{\rho} = \frac{v^2}{4}$$

$$0.4N = 0 + \frac{W}{9.81} \times \frac{v^2}{4} \cos\theta \qquad \text{..... (I)}$$

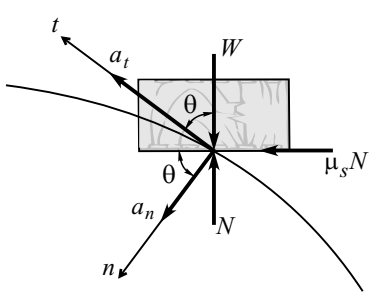

Fig. 13.37(b) : F.B.D. of Block having Weight *W*

By Newton's second law, we have

$$\sum F_y = ma_y$$

$$N - W = ma_t \cos\theta - ma_n \sin\theta$$

$$N - W = 0 - \frac{W}{9.81} \times \frac{v^2}{4} \sin\theta$$

$$N = W - \frac{Wv^2 \sin\theta}{39.24} \qquad \text{..... (II)}$$

(ii) Putting Eq. (II) in Eq. (I),

$$0.4\left[W - \frac{Wv^2 \sin\theta}{39.24}\right] = \frac{Wv^2 \cos\theta}{39.24}$$

$$0.4\left[1 - \frac{v^2 \sin\theta}{39.24}\right] = \frac{v^2 \cos\theta}{39.24}$$

$$0.4 - \frac{0.4\, v^2 \sin\theta}{39.24} = \frac{v^2 \cos\theta}{39.24}$$

$$0.4 = \frac{v^2}{39.24} (\cos\theta + 0.4 \sin\theta)$$

$$15.7 = v^2 (\cos\theta + 0.4 \sin\theta)$$

$$v^2 = \frac{15.7}{\cos\theta + 0.4 \sin\theta} \qquad \text{..... (III)}$$

(iii) For Eq. (III), here $v = f(\theta)$ for maximum velocity apply maxima condition

$$\frac{dv}{d\theta} = 0$$

$$2v\frac{dv}{d\theta} = \frac{-15.7}{(\cos\theta - 0.4\sin\theta)} \times (-\sin\theta + 0.4\cos\theta)$$

$$\frac{dv}{d\theta} = \frac{-15.7(-\sin\theta + 0.4\cos\theta)}{2v(\cos\theta - 0.4\sin\theta)} = 0$$

$$-\sin\theta + 0.4\cos\theta = 0$$

$$\tan\theta = 0.4 \qquad \therefore \theta = 21.8^{\circ}$$

From Eq. (III),

$$v^2 = \frac{15.7}{\cos 21.8^{\circ} + 0.4\sin 21.8^{\circ}} = 14.58 \qquad \therefore v = 3.82 \text{ m/s}$$

Now, $v = r\omega$

$$\therefore \omega = \frac{v}{r} = \frac{3.82}{4} \qquad \therefore \omega = 0.955 \text{ r/s}$$

Problem 38

A sphere of 350 N weight is tied by a cord to the block of 200 N weight lying on smooth horizontal surface as shown in Fig. 13.38(a). The sphere is released from rest at an angle of 60° with the horizontal. At this instant, find the tension in the cord and acceleration of the block if the length of the cord AB is 1.5 m.

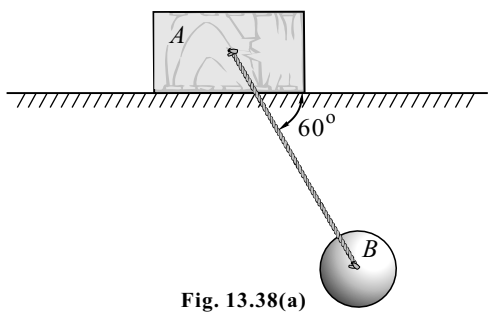

Fig. 13.38(a)

Solution

(i) Here, two particles block A and sphere B are having dependent motion. When sphere B will swing like pendulum towards left at that instant block A will slide towards right and due to rightward motion of block A the swinging sphere will also move to the right in terms of relative motion.

So, relative motion of sphere B w.r.t. block A is given as

$$a_{B/A} = a_B - a_A$$

Here sphere B is performing curvilinear motion.

$\therefore$ Considering tangent and normal component, we have $a_{B/A}$ with two components, i.e., $a_{(B/A)t}$ and $a_{(B/A)n}$.

(ii) Consider the F.B.D. of block *A*

By Newton's second law, we have

$$\sum F_x = ma_x$$

$$T\cos 60^{\circ} = \frac{200}{9.81} \times a_A$$

$$T = 40.78\, a_A \qquad \text{..... (I)}$$

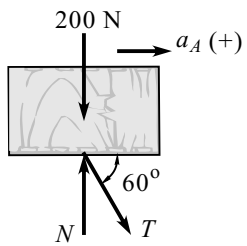

Fig. 13.38(b) : F.B.D. of Block *A*

(ii) Consider the F.B.D. of sphere *B*

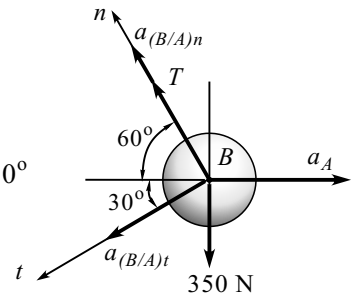

Fig. 13.38(c) : F.B.D. of Sphere *B*

By Newton's second law, we have

$\sum F_x = ma_x$

$$-T\cos 60^\circ = -\frac{350}{9.81} \times a_{(B/A)n}\cos 60^\circ - \frac{350}{9.81}\, a_{(B/A)t}\cos 30^\circ + \frac{350}{9.81}\, a_A \quad \text{..... (II)}$$

$\sum F_y = ma_y$

$$T\sin 60^\circ - 350 = \frac{350}{9.81}\, a_{(B/A)n}\sin 60^\circ - \frac{350}{9.81}\, a_{(B/A)t}\sin 30^\circ \quad \text{..... (III)}$$

At the instant of releasing, velocity of sphere will be zero.

$\because\ a_n = \dfrac{v^2}{\rho} \qquad \therefore\ a_{(B/A)n} = \dfrac{v^2}{\rho} = 0$

Substituting the value of Eq. (I) in Eq. (II), we get

$$-40.78\, a_A\cos 60^\circ = 0 - \frac{350}{9.81}\, a_{(B/A)t}\cos 30^\circ + \frac{350}{9.81}\, a_A$$

$$-20.39\, a_A = -35.68\, a_{(B/A)t}\cos 30^\circ + 35.68\, a_A$$

$$-56.07\, a_A = -35.68\, a_{(B/A)t}$$

$$a_A = 0.5512\, a_{(B/A)t} \quad \text{..... (IV)}$$

(iii) Putting Eq. (I) in Eq. (III), we get

$$40.78\, a_A\sin 60^\circ - 350 = 0 - \frac{350}{9.81}\, a_{(B/A)t}\sin 30^\circ$$

$$35.32\, a_A - 350 = -17.84\, a_{(B/A)t} \quad \text{..... (V)}$$

Substituting the value of Eq. (IV) in Eq. (V), we get

$$35.32 \times 0.5512\, a_{(B/A)t} - 350 = -17.84\, a_{(B/A)t}$$

$$19.47\, a_{(B/A)t} - 350 = -17.84\, a_{(B/A)t}$$

$$37.31\, a_{(B/A)t} = 350$$

$$a_{(B/A)t} = 9.381 \text{ m/s}^2$$

From Eq. (IV), we get

$$a_A = 0.5512\, a_{(B/A)t}$$

$$a_A = 0.5512 \times 9.381$$

$$a_A = 5.171 \text{ m/s}^2$$

From Eq. (I), we get

$$T = 40.78\, a_A$$

$$T = 40.78 \times 5.171$$

$$T = 210.87 \text{ N}$$

SUMMARY

- **Kinetics :** It is the study of geometry of motion with reference to the cause of motion (Force and mass are considered).
- **Newton's Second Law of Motion :** The acceleration of a particle is proportional to the resultant force acting on it and is in the direction of this force $\Sigma F = ma$.
- **For Rectilinear Motion :** In rectangular coordinate system

  $\Sigma F_x = ma_x$

  $\Sigma F_y = ma_y$

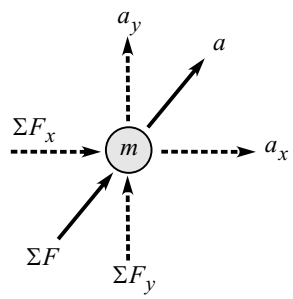

- **For Curvilinear Motion :** In tangent and normal coordinate system

  a_t = Tangential component of acceleration

  a_n = Normal component of acceleration

  $\sum F_t = ma_t = m\dfrac{dv}{dt}$

  $\sum F_n = ma_n = m\dfrac{v^2}{\rho}$

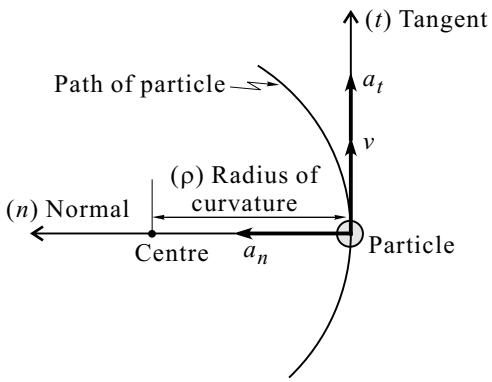

- **D'Alemberts' Principle :** The algebraic sum of external force (ΣF) and inertia force ($-ma$) is equal to zero.

  $\sum F - ma = 0$

- **For Rectilinear Motion**

  $\sum F_x - ma_x = 0$ and $\sum F_y - ma_y = 0$

- **For Curvilinear Motion**

  $\sum F_t - ma_t = 0$ and $\sum F_n - ma_n = 0$

- **Concept of Virtual Work :** Total virtual work done by internal force of a string (tension) is equal to zero.

EXERCISES

[I] Problems

1. An 80 kg block shown in Fig. 13.E1 rests on a horizontal plane. Find the magnitude of force P required to give the block an acceleration of 2.5 m/s^2 to the right. Take $\mu_k = 0.25$.

[***Ans.*** $P =$ 535 N]

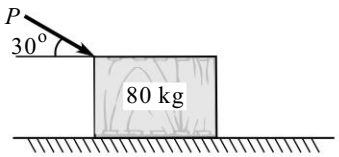

Fig. 13.E1

2. A car travelling at a speed of v = 60 kmph is braked and comes to rest in 6 s after the brakes are applied. Find the minimum coefficient of friction between the wheels and the road.

[***Ans.*** $\mu = 0.278$]

3. Three blocks m_1, m_2 and m_3 of masses 1.5 kg, 2 kg and 1 kg respectively are placed on a rough surface ($\mu = 0.2$) as shown in Fig. 13.E3. If a force F is applied so as to give the blocks acceleration of 3 m/s^2 then what will be the force that 1.5 kg block exerts on the 2 kg block. Also, find force F.

[***Ans.*** 14.89 N and 22.33 N]

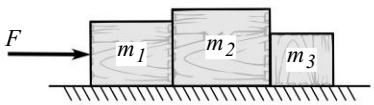

Fig. 13.E3

4. Block A of 4 N weight is connected to block B of weight 8 N by an inextensible string as shown in Fig. 13.E4. Find the velocity of block A if it falls by 0.6 m starting from rest. $\mu_k = 0.2$. Also find the tension in the string.

[***Ans.*** v = 1.53 m/s and T = 3.2 N]

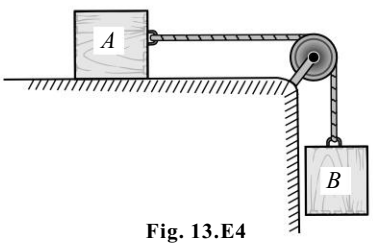

Fig. 13.E4

5. Figure 13.E5 shows a 4 kg mass resting on a smooth plane inclined at 30° with the horizontal. A cord passes from this mass over a frictionless, massless pulley to an 8 kg mass which when released will drop vertically down. What will be the velocity of 8 kg mass, 3 s after it is released from rest.

[***Ans.*** 14.7 m/s]

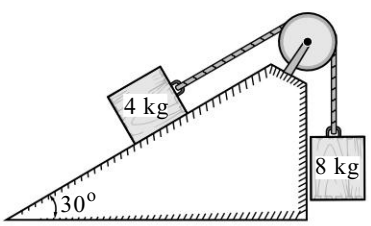

Fig. 13.E5

6. A horizontal force P = 70 N is exerted on mass A = 16 kg as shown in Fig. 13.E6. The μ between A and the horizontal plane is 0.25. B has a mass of 4 kg and coefficient of friction between it and the plane is 0.50. The cord between the two masses makes an angle of 10° with the horizontal. What is the tension in the cord?

[***Ans.*** T = 20.5 N]

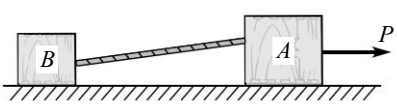

Fig. 13.E6

7. Two masses of 5 kg and 2 kg are positioned over frictionless and massless pulley as shown in Fig. 13.E7. If the 5 kg mass is released from rest, determine the speed at which the 5 kg mass will hit the ground.

[***Ans.*** $v = 4.1$ m/s]

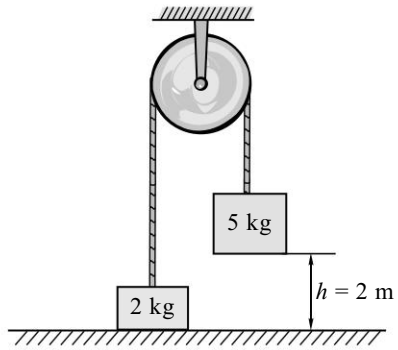

Fig. 13.E7

8. The 25 N block B rests on the smooth surface as shown in Fig. 13.E8. Determine its acceleration when the 15 N block A is released from rest. What would be the acceleration of B if the block of A was replaced by a 15 N vertical force acting on the attached cord?

[***Ans.*** 2.56 m/s^2 and 2.94 m/s^2]

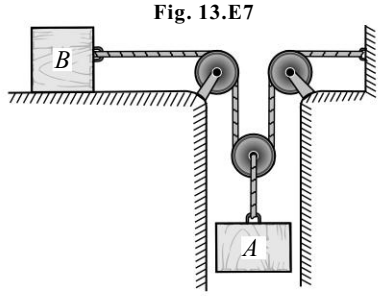

Fig. 13.E8

9. The block shown in Fig. 13.E9 has a weight of 500 N and is acted upon by a variable force having magnitude $P = 200t$. Compute the block velocity 2 sec after P has been applied. The blocks initial velocity is 3 m/s down the plane. Take $\mu_k = 0.3$ Also find the distance traveled at the end of 2 s.

[***Ans.*** 15.6 m/s and 28.4 m]

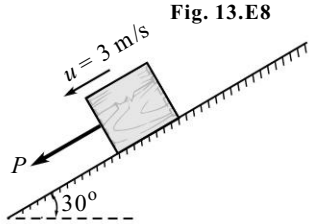

Fig. 13.E9

10. Three blocks A, B and C are connected as shown in Fig. 13.E10. Find acceleration of the masses and the tension T_1 and T_2 in the strings.

[***Ans.*** $T_1 = 32.8$ N, $T_2 = 103.8$ N and $a = 4.6$ m/s^2]

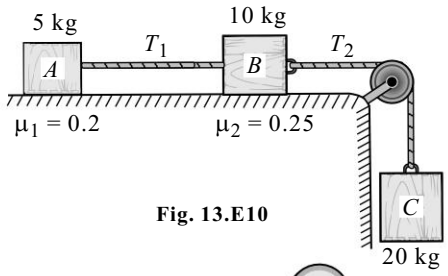

Fig. 13.E10

11. Three bodies A, B and C of 100 N, 200 N and 300 N weights respectively are connected by inextensible string passing over a smooth pulley as shown in Fig. 13.E11. The coefficient of friction between block A and plane is 0.1 and that between block B and plane is 0.2. Find the acceleration of the bodies A, B and C if the system starts from rest. Neglect the weight of the pulley. Also, find the tensions in the string between **(a)** A and B, and **(b)** B and C. Also find the time taken by body C to travel a distance of 10 m.

[***Ans.*** $a = 0.858$ m/s^2, $T_1 = 273.74$ N, $T_2 = 86.53$ N and $t = 4.83$ s]

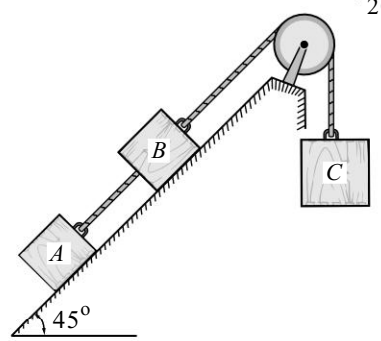

Fig. 13.E11

12. Block A has a mass of 25 kg and block B a mass of 15 kg as shown in Fig. 13.E12. The coefficients of friction between all surface of contact are $\mu_s = 0.20$ and $\mu_k = 0.15$ knowing that $\theta = 25°$ and magnitude of force P applied to block B is 250 N, determine **(a)** the acceleration of block A and B, and **(b)** tension in the cord.

[***Ans.*** **(a)** $a_A = a_B = 2.213$ m/s^2 and **(b)** $T = 192.31$ N]

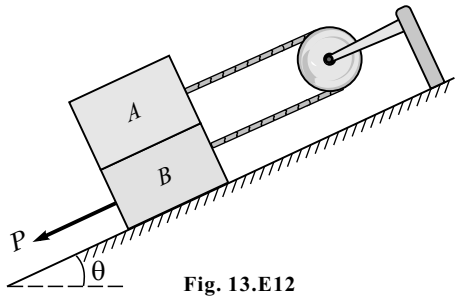

Fig. 13.E12

13. Determine the least coefficient of friction between A and B as shown in Fig. 13.E13 so that slip will not occur. A is a 40 kg mass, B is a 15 kg mass and F is 500 N parallel to the plane which is smooth.

[***Ans.*** 0.30]

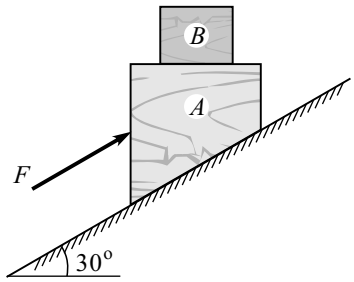

Fig. 13.E13

14. The two blocks shown in Fig. 13.E14 are originally at rest. Neglecting the masses of the pulleys and the effect of friction in the pulleys and between block A and the horizontal surface, determine **(a)** the acceleration of each block, and **(b)** the tension in the cable.

[***Ans.*** $a_A = 2.49$ m/s^2 (→), $a_B = 0.831$ m/s^2 (↓) and $T = 74.8$ N]

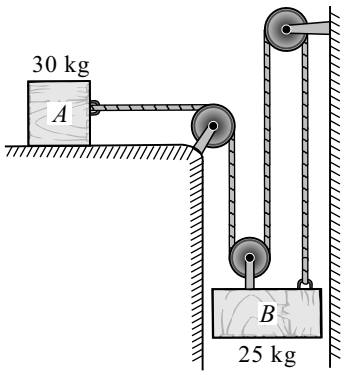

Fig. 13.E14

15. In Fig. 13.E15, the two blocks are originally at rest. Neglecting the masses of the pulleys and considering the coefficient of friction between the block A and inclined plane as 0.25, determine **(a)** the acceleration of each block, and **(b)** the tension in the cable.

[***Ans.*** $a_A = 1.854$ m/s^2, $a_B = 0.927$ m/s^2 and $T = 7244$ N, $T_1 = 14488$ N]

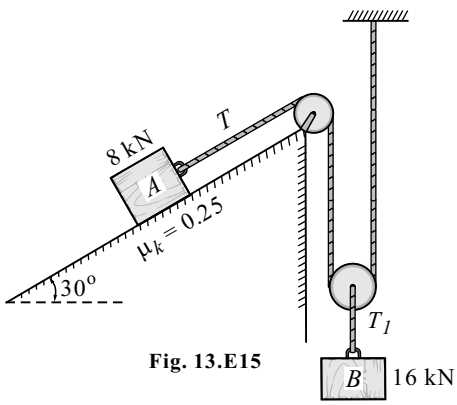

Fig. 13.E15

16. The blocks A and B shown in Fig. 13.E16 have a mass of 10 kg and 100 kg, respectively. Determine the distance that block B travels from the point where it is released from rest to the point where its speed becomes 2 m/s.

[***Ans.*** 0.883 m]

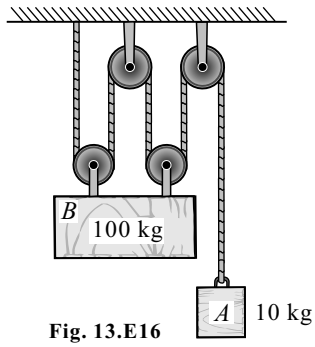

Fig. 13.E16

17. A force P applied to a system of light pulleys to pull body A of 4000 kg mass as shown in Fig. 13.E17. What is the speed of A after 2 s starting from rest?

[***Ans.*** 1 m/s]

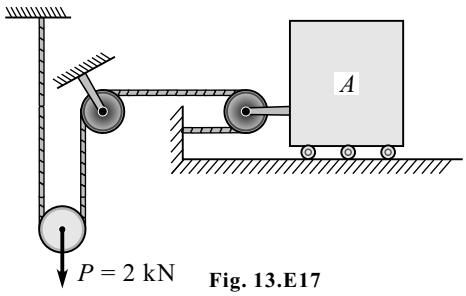

Fig. 13.E17

18. Determine the acceleration of the 5 kg cylinder A as shown in Fig. 13.E18. Neglect the mass of the pulleys and cords. The block at B has a mass of 10 kg. The coefficient of kinetic friction between block B and the surface is 0.1.

[***Ans.*** 0.0595 m/s]

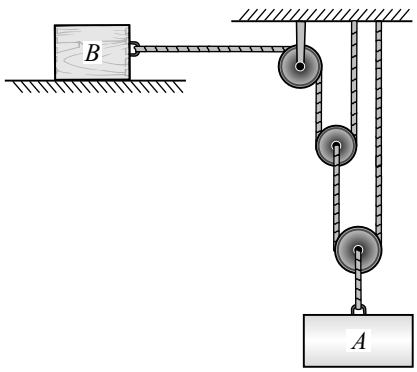

Fig. 13.E18

19. Determine the tension developed in the cords attached to each block and the acceleration of the blocks as shown in Fig. 13.E19. Neglect the mass of the pulley and cords.

[***Ans.*** $a_A = 1.51$ m/s^2 (↑), $a_B = 6.04$ m/s^2 (↓), $T_A = 22.6$ N and $T_B = 90.6$ N]

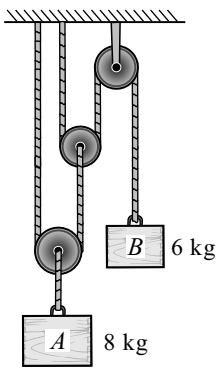

Fig. 13.E19

20. The slider block A shown in Fig. 13.E20 starts from rest and moves to the left with constant acceleration. Knowing that velocity of B is 60 cm/s, after moving through a distance of 100 cm, calculate accelerations of A and B.

[***Ans.*** a_A = 27 m/s^2 and a_B = 18 cm/s^2]

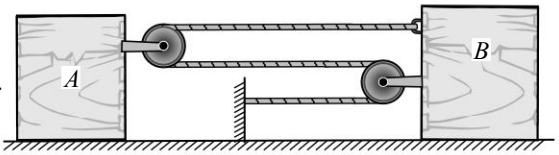

Fig. 13.E20

21. Determine the accelerations of bodies A and B and the tension in the cable due to the application of the 300 N force in Fig. 13.E21. Neglect all friction and the masses of the pulleys.

[***Ans.*** a_A = 2.34 m/s^2, a_B = 1.558 m/s^2 and T = 81.8 N]

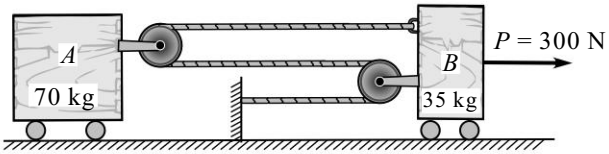

Fig. 13.E21

22. A car while travelling at a speed of 50 kmph passes through a curved portion of road in the form of an arc of a circle of radius 10 m in the vertical plane. The reaction offered by the lowest point of the arc on the car is **(a)** 14.55 kN, **(b)** 29.10 kN, **(c)** 7.25 kN **(d)** 145.4 kN. Take g = 9.81 m/s^2.

[***Ans.*** None, R = 29.1 m where m = mass of car in kg]

23. Two wires AC and BC are tied at C to a sphere which revolves at constant speed v in the horizontal circle as shown in Fig. 13.E23. Determine minimum velocity v at which tension in either wires does not exceed 35 N.

[***Ans.*** 3.193 m/s]

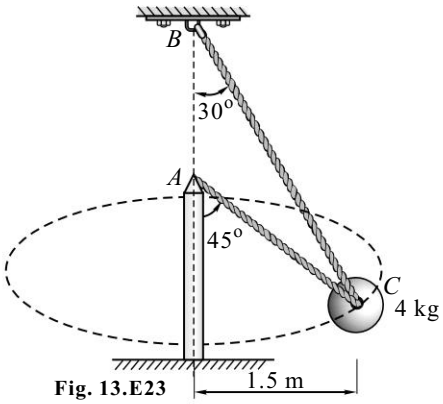

Fig. 13.E23

24. Two wires AC and BC are tied at C to a sphere which revolves at a constant speed v in the horizontal circle as shown in Fig. 13.E24. Determine the range of values of v for which both wires remain taut.

[***Ans.*** 3.01 to 3.96 m/s]

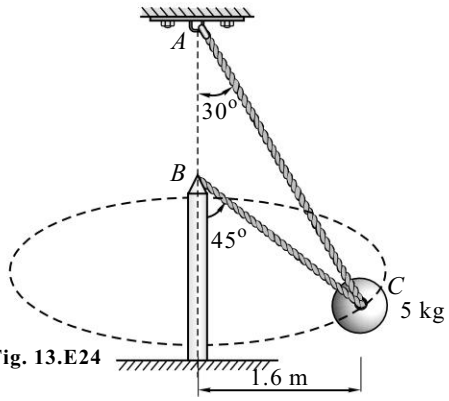

Fig. 13.E24

25. A bus moving with a 12 m/s velocity suddenly turns round a curve of radius of 8 m. Find the force acting on a passenger of 70 kg due to this circular motion.

[***Ans.*** 1260 N]

26. Determine the rated speed of a highway curve of radius ρ = 125 m banked through an angle θ = 18°. The rated speed of a banked curved road is the speed at which a car should travel if no lateral friction force is to be exerted on its wheels. Take g = 9.81 m/s^2.

[***Ans.*** 19.96 m/s]

[II] Review Questions

1. State Newton's second law of motion.

2. Derive the expression $F = ma$.

3. State D'Alembert's principle.

4. Explain the concept of virtual work done by internal force tension.

5. Compare Newton's second law with D'Alembert's principle.

[III] Fill in the Blanks

1. Mass is the quantity of _____ contained in a body.

2. _____ is the property of a body which measures its resistance to ta change of motion.

3. Rate of change of _____ is directly proportional to the force.

4. As per D'Alembert's principle, the algebraic sum of external force and _____ force is equal to zero.

5. Total virtual work done by internal force (tension) is equal to _____.

[IV] Multiple-choice Questions

Select the appropriate answer from the given options.

1. In kinetics of rigid body we consider the _____.

(a) force **(b)** mass **(c)** acceleration **(d)** All of these

2. The direction of acceleration and direction of particle motion can be _____.

(a) same **(b)** opposite **(c)** same or opposite **(d)** None of these

3. State true or false: If there is no friction in the system, one can assume any direction for acceleration.

(a) True **(b)** False

4. Work done by frictional force is always _____.

(a) positive **(b)** negative **(c)** zero **(d)** None of these

5. If a block is sliding down on a frictional surface inclined at θ with horizontal, then the component of acceleration due to gravity along inclined is equal to _____ m/s^2.

(a) 9.81 **(b)** –9.81 **(c)** 9.81 sin θ **(d)** 9.81 cos θ

CHAPTER

14

KINETICS OF PARTICLES II

WORK - ENERGY PRINCIPLE

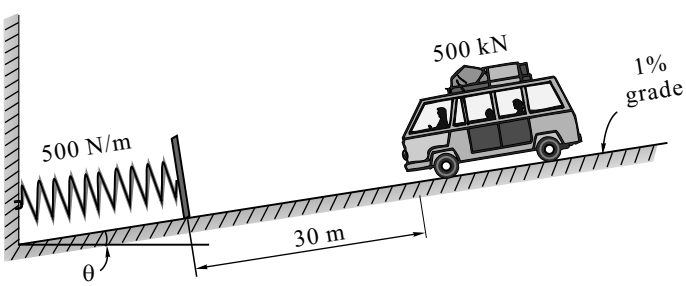

Learning Objectives

After reading this chapter, you will be able to answer the following questions:

- *What is work done by weight force?*
- *What is meant by work done by frictional force?*
- *What do you mean by work done by spring force?*
- *What is work - energy principle?*
- *What is kinetic energy and potential energy?*
- *What is the principle of conservation of energy?*
- *What is conservative and non-conservative forces?*
- *What is power?*

14.1 INTRODUCTION

In the previous chapter, problems were solved using *Newton's Second Law*. In this chapter, we are going to approach by *Work Energy Principle*. This method is advantageous over Newton's second law when the problem involves *force*, *velocity* and *displacement*, rather than *acceleration*. Also when spring force is involved one should prefer work energy principle to solve the problem.

14.2 WORK DONE BY A FORCE

If a particle is subjected to a force F and particle is displaced by s from position ① to position ② then work done U is the product of force and displacement.

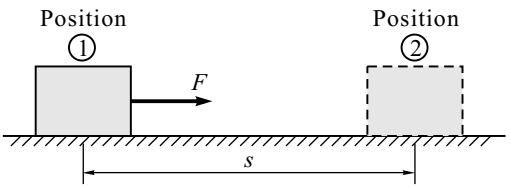

Fig. 14.2-i

Work done = Force × Displacement

$U = F \times s$

If a particle is subjected to a force F at an angle θ with horizontal and the particle is displaced by s from position ① to position ② then work done U is the product of force component in the direction of displacement $F \cos \theta$ and displacement s.

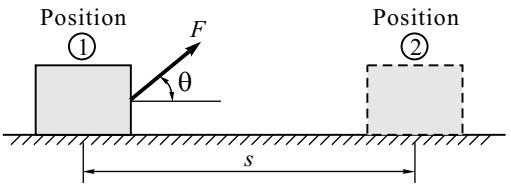

Fig. 14.2-ii

Work done = Component of force in direction of displacement × Displacement

$U = F \cos \theta \times s$

Important Points About Work Done

1. *Work done by a force is positive if the direction of force and the direction of displacement both are in same direction.*
   Example : Work done by force of gravity is positive when a body moves from a higher position to lower position.
2. *Work done by a force is negative if the direction of force and the direction of displacement both are in opposite direction.*
   Example : Work done by force of gravity is negative when a body moves from a lower position to higher position.
3. *Work done by a force is zero if either the displacement is zero or the force acts normal to the displacement.*
   Example : Gravity force does not work when body moves horizontally.
4. *Work is a scalar quantity.*
5. *Unit of work is N.m or Joule (J).*

14.3 WORK DONE BY WEIGHT FORCE

In Fig. 14.3-i, if a particle of mass m is displaced from position ① to position ② then work done is given by

Work done = Component of weight in the direction of displacement × Displacement

$U = mg \sin\theta \times s$

Work done = Weight force × Displacement in the direction of weight force

$U = mg \times s \sin\theta$

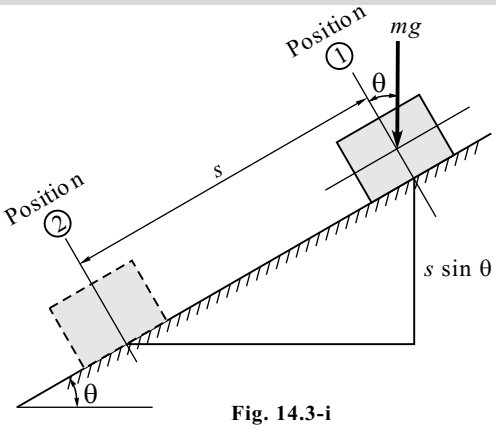

Fig. 14.3-i

14.4 WORK DONE BY FRICTIONAL FORCE

In Fig. 14.4-i, if a particle of mass m moves from position ① to position ②, then work done on frictional force is given by

Work done = –Frictional force × Displacement

$U = -\mu N \times s$

Note : (i) Work done by frictional force is –ve because direction of frictional force and displacement are opposite.

(ii) Work done by normal reaction (N) and component of weight force perpendicular to inclined plane ($mg \cos\theta$) is zero.

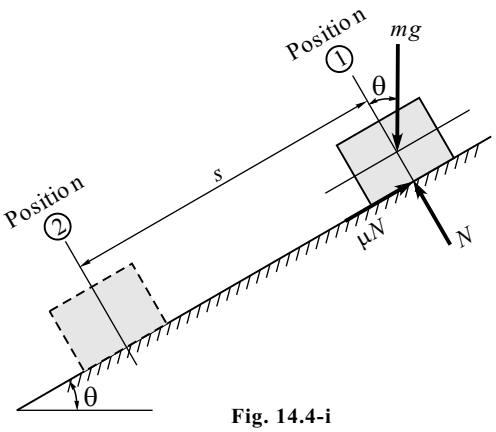

Fig. 14.4-i

14.5 WORK DONE BY SPRING FORCE

Consider a spring of stiffness k as shown in Fig. 14.5-i, of undeformed (free/original) length.

Let x_1 be the deformation of spring at position ①.

Let x_2 be the deformation of spring at position ②.

$\therefore$ Spring force $F = -k \times x$

where k is the spring stiffness (N/m)

x is the deformation of spring (m)

–ve sign indicates direction of spring force acts towards original position.

Work done = Spring force × Deformation

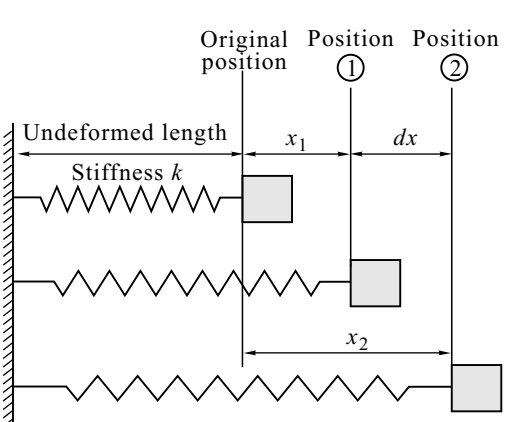

Fig. 14.5-i

$$U = \int_{x_1}^{x_2} -kx\, dx$$

$$\therefore\ U = -\frac{1}{2}\, k\left(x_2^2 - x_1^2\right)$$

$$\therefore\ U = \frac{1}{2}\, k\left(x_1^2 - x_2^2\right)$$

14.6 WORK - ENERGY PRINCIPLE

Work done by the forces acting on a particle during some displacement is equal to the change in kinetic energy during that displacement.

Proof

Consider the particle having mass m acted upon by a force F and moving along a path which can be rectilinear or curvilinear as shown in Fig. 14.6-i.

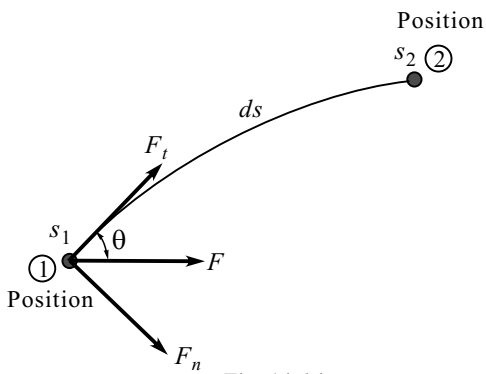

Fig. 14.6-i

Let v_1 and v_2 be the velocities of the particle at position ① and position ② and the corresponding displacement s_1 and s_2 respectively.

By Newton's second law, we have

$$\sum F_t = ma_t$$

$$F\cos\theta = ma_t = m\frac{dv}{dt}$$

$$F\cos\theta = m\frac{dv}{ds} \times \frac{ds}{dt}$$

$$F\cos\theta = mv \times \frac{dv}{ds}$$

$$F\cos\theta\, ds = mv\, dv$$

Integrating both sides, we have

$$\int_{s_1}^{s_2} F\cos\theta\, ds = \int_{v_1}^{v_2} mv\, dv$$

$$\therefore\ U_{1\text{-}2} = \frac{1}{2}\, mv_1^2 - \frac{1}{2}\, mv_2^2$$

Work done = Change in Kinetic Energy

1. Kinetic Energy of a Particle

It is the energy possessed by a particle by virtue of its motion.

If a particle of mass m is moving with the velocity v, its kinetic energy is given by

$$\text{K.E.} = \frac{1}{2}\, mv^2 \qquad \text{Unit of K.E. is N.m or joule (J)}$$

2. Potential Energy of a Particle

It is the energy possessed by a particle by virtue of its position.

If a particle of mass m is moving from position ① to position ②, then

Work done = Weight force × Displacement

$U = mgh$ = P.E.

Unit of P.E. is N.m or Joule (J)

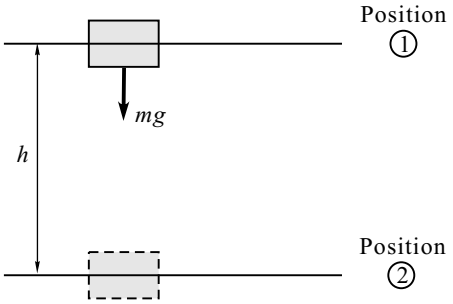

Fig. 14.6-ii

Note : Work done by weight force will be negative if moved from lower position to upper position.

3. Conservative Forces

If the work done by a force is moving a particle between two positions is independent of the path followed by the particle and can be expressed as a change in its potential energy, then such forces are called ***conservative forces****.*

Example : Weight force of particle (gravity force), spring force and elastic force.

4. Non-Conservative Forces

The forces in which the work is dependent upon the path followed by the particles is known as ***non-conservative forces****.*

Example : Frictional force, viscous force.

5. Principle of Conservation of Energy

When a particle is moving from position ① to position ② under the action of only conservative forces (i.e., when frictional force does not exist) then by ***energy conservation principle****, we say that the total energy remains constant.*

Total energy = Kinetic energy + Potential energy + Strain energy of spring

$$\text{Total energy} = \frac{1}{2}mv^2 \pm mgh + \frac{1}{2}kx^2$$

6. Power

It is defined as the rate of doing work.

$$\text{Power} = \frac{\text{Work}}{\text{Time}}$$

$$\text{Power} = \frac{\text{Force} \times \text{Displacement}}{\text{Time}}$$

Power = Force × Velocity

Unit of power is joule/second (J/s) or watt (W)

1 W = 1 J/s = 1 Nm/s

One metric horsepower = 735.5 watt

Solved Problems

Problem 1

A force of 500 N is acting on a block of 50 kg mass resting on a horizontal surface as shown in Fig. 14.1(a). Determine its velocity after the block has travelled a distance of 10 m. Coefficient of kinetic friction $\mu_k = 0.5$.

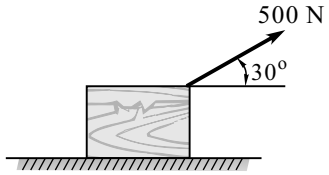

Fig. 14.1(a)

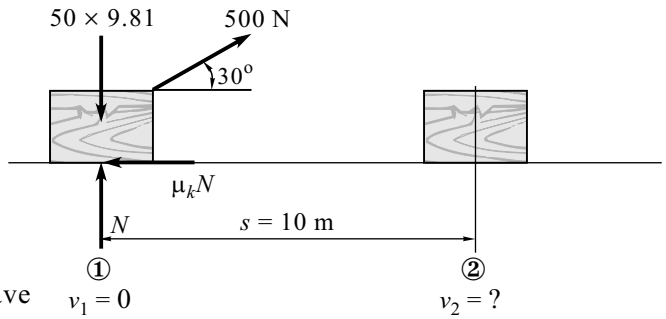

Fig. 14.1(b)

Solution

(i) $\sum F_y = ma_y = 0 \ (\because a_y = 0)$

$N_1 - 50 \times 9.81 + 500 \sin 30^\circ = 0$

$N = 240.5$ N

(ii) By principle of work - energy, we have

Work done = Change in K.E.

$$500 \cos 30^\circ \times 10 - \mu_k N \times 10 = \frac{1}{2} \times 50 \times v_2^2 - 0$$

$$500 \cos 30^\circ \times 10 - 0.5 \times 240.5 \times 10 = 25 \times v_2^2$$

$v_2 = 11.185$ m/s

Problem 2

Block A has a mass of 2 kg and has a velocity of 5 m/s up the plane shown in Fig. 14.E2. Using the principle of work - energy; locate the rest position of the block.

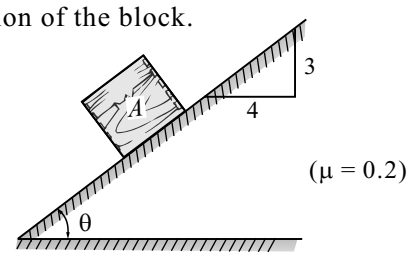

Fig. 14.2(a)

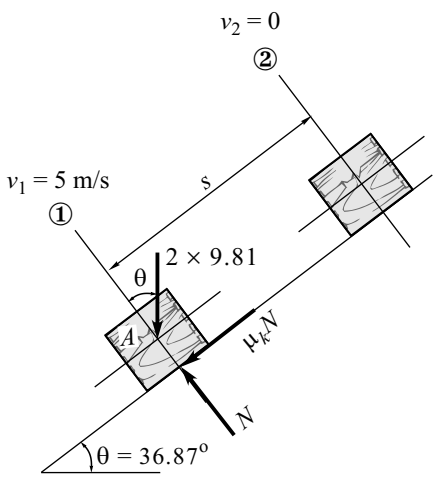

Fig. 14.2(b)

Solution

(i) By principle of work - energy, we have

Work done = Change in K.E.

$$-2 \times 9.81 \sin \theta \times s - \mu N \times s = 0 - \frac{1}{2} \times 2 \times 5^2$$

$$-2 \times 9.81 \sin 36.87^\circ \times s - 0.2 \times 2 \times 9.81 \cos 36.87^\circ \times s = -\frac{1}{2} \times 2 \times 5^2$$

$s = 1.68$ m

Problem 3

A mass of 20 kg is projected up an inclined of 26° with velocity of 4 m/s as shown in Fig. 14.E3. If $\mu = 0.2$, **(i)** find maximum distance that the package will move along the plane, and **(ii)** What will be the velocity of the package when it comes back to initial position?

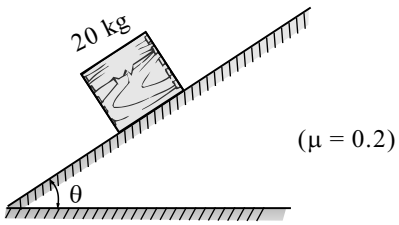

Fig. 14.3(a)

Solution

Case (i) Upward motion, from ① to ②

Refer to Fig. 14.3(b).

At position ①,

$v_1 = 4$ m/s

At position ②,

$v_2 = 0$

By work - energy principle, we have

Work done = Change in K.E.

$$-20 \times 9.81 \sin 26^\circ \times d - 0.2 \times 20 \times 9.81 \cos 26^\circ \times d = 0 - \frac{1}{2} \times 20 \times 4^2$$

$d(86 + 35.37) = 160$

$d = 1.32$ m

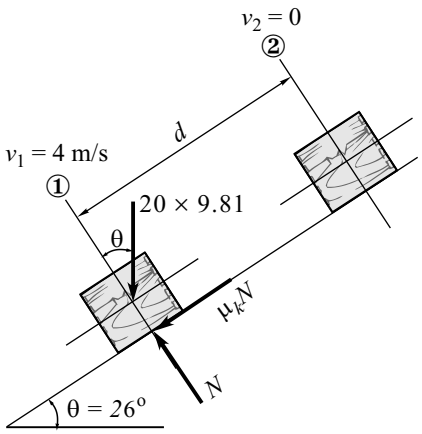

Fig. 14.3(b)

Case (ii) Downward motion, from ② to ①

Refer to Fig. 14.3(c).

At position ①,

$v_1 = 0$

At position ②,

$v_2 = ?$

Displacement $d = 1.32$ m

By work - energy principle, we have

Work done = Change in K.E.

$$20 \times 9.81 \sin 26^\circ \times 1.32 - 0.2 \times 20 \times 9.81 \cos 26^\circ \times 1.32 = \frac{1}{2} \times 20 v_2^2 - 0$$

$v_2 = 2.59$ m/s

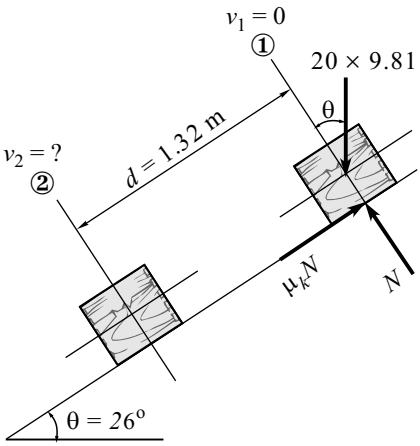

Fig. 14.3(c)

Problem 4

The 0.8 kg collar slides with negligible friction on the fixed rod in the vertical plane as shown in Fig. 14.E4. If the collar starts from the rest at A under the action of constant 8 N horizontal force. Calculate the velocity as it hits the stop at B.

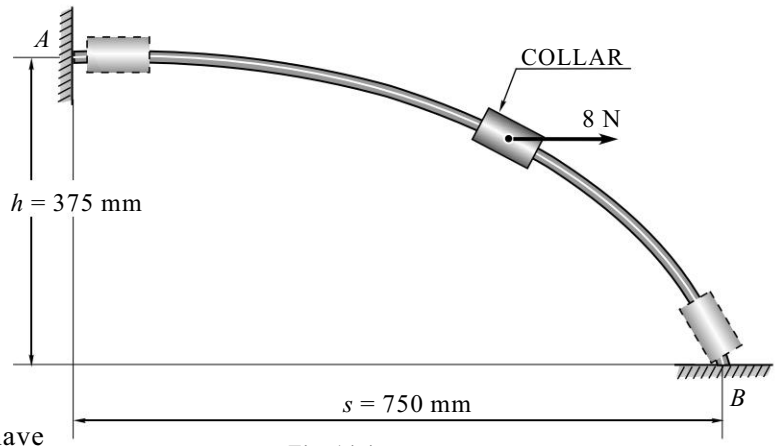

Fig. 14.4

Solution

At position A : $v_A = 0$

At position B : $v_B = ?$

By work - energy principle, we have

Work done = Change in K.E.

$$mgh + 8 \times s = \frac{1}{2} \times 0.8 \times v_B^2 - 0$$

$$0.8 \times 9.81 \times 0.375 + 8 \times 0.75 = 0.4\, v_B^2$$

$$v_B = 4.728 \text{ m/s}$$

Problem 5

(i) Determine the distance in which a car moving at 90 kmph can come to rest after the power is switched off if μ between tyres and road is 0.8.

(ii) Determine also the maximum allowable speed of a car, if it is to stop in the same distance as above on ice road where the coefficient of friction between tyres and road is 0.08.

Solution

(i) μ = 0.8

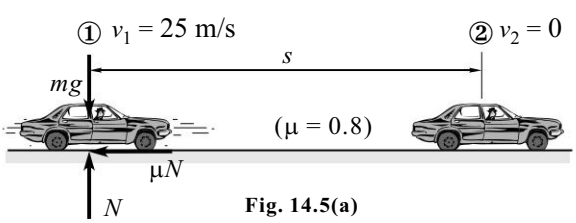

Fig. 14.5(a)

At position ①

$$v_1 = 90 \times \frac{1000}{3600} = 25 \text{ m/s}$$

At position ② $v_2 = 0$

By work - energy principle, we have

Work done = Change in K.E.

$$-\mu N \times s = 0 - \frac{1}{2} \times m \times (25)^2$$

$$-0.8 \times mg \times s = -\frac{1}{2}\, m \times 625$$

$$s = 39.82 \text{ m}$$

(ii) For Ice Road

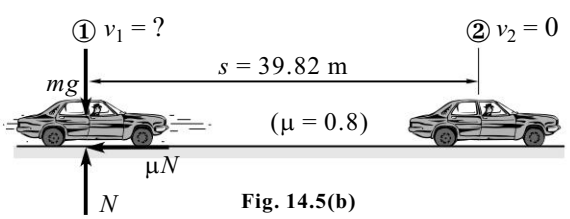

Fig. 14.5(b)

$\mu = 0.08,\ v_1 = ?\ v_2 = 0,\ s = 39.82$ m

By work - energy principle, we have

Work done = Change in K.E.

$$-\mu N \times s = 0 - \frac{1}{2} \times m \times v_1^2$$

$$-0.08 \times mg \times 39.82 = -\frac{1}{2}\, m \times v_1^2$$

$$v_1 = 7.91 \text{ m/s}$$

Problem 6

Packages having a mass of 5 kg are transferred horizontally from one conveyor to the next using a ramp for which the coefficient of kinetic friction is $\mu_k = 0.15$. The top conveyor is moving at 2 m/s and packages are spaced 1 m as shown in Fig. 14.E6. Determine the required speed of bottom conveyor so that no slipping occurs when packages come horizontally in contact with it. What is the spacing s between the packages on the bottom conveyor? Use work - energy principle.

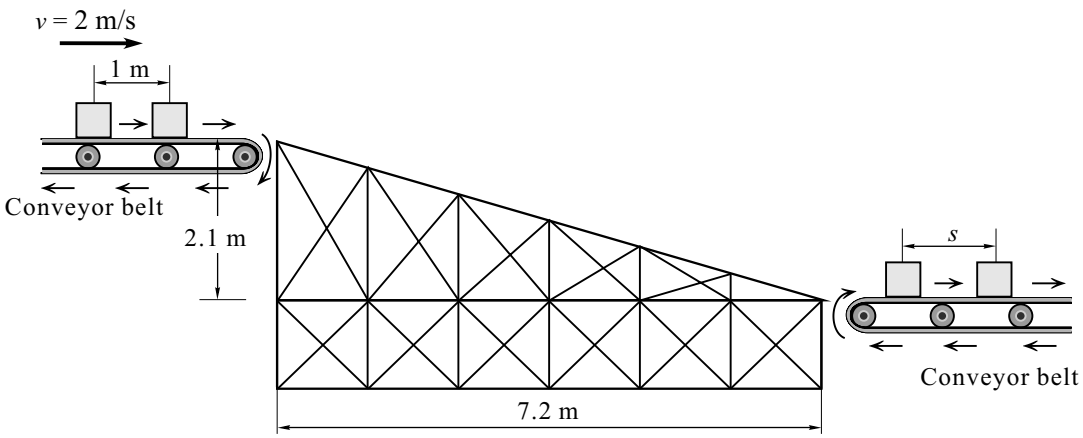

Fig. 14.6(a)

Solution

At position ①

$v_1 = 2$ m/s

Displacement $s = 7.5$

By work - energy principle, we have

Work done = Change in kinetic energy

$$5 \times 9.81 \sin 16.26^o \times 7.5 - 0.15 \times 5 \times 9.81 \cos 16.26^o \times 7.5 = \frac{1}{2} \times 5 \times v_2^2 - \frac{1}{2} \times 5 \times 2^2$$

$$50.03 = 2.5\, v_2^2 - 10$$

$$v_2 = 4.9 \text{ m/s}$$

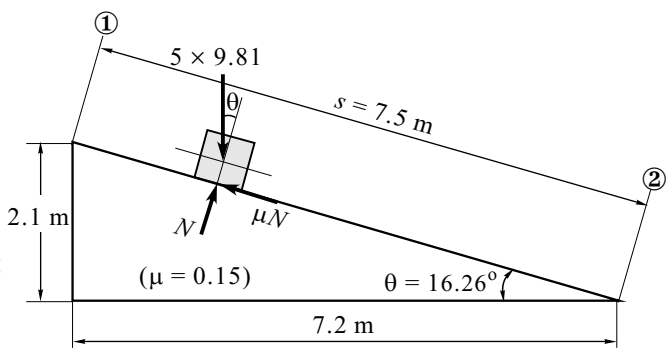

Fig. 14.6(b)

Refer to the top conveyor, blocks are separated by distance $s = 1$ m, speed $v = 2$ m/s.
Let t be the time required between two blocks to follow inclined plane.

$s = v \times t$

$t = \frac{1}{2} = 0.5$ sec

Since time interval will remain same of blocks at bottom conveyor also.

$\therefore$ Spacing at bottom conveyor (s)

$s = v \times t$

$s = 4.9 \times 0.5$

$s = 2.45$ m

Problem 7

A block of 8 kg mass slides freely on a smooth vertical rod as shown in Fig. 14.7(a). The mass is released from rest at a distance of 500 mm from the top of the spring. The spring constant is 60 N/mm. Determine the velocity of block when the spring has compressed through 20 mm. The free length of the spring is 400 mm.

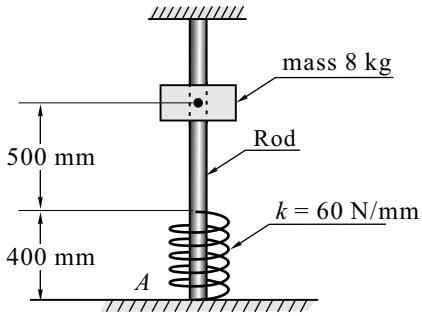

Fig. 14.7(a)

Solution

Given : k = 60 N/mm = 60000 N/m

At position ① : $v_1 = 0$, $x_1 = 0$

At position ② : $v_2 = ?$, $x_2 = 0.02$ m

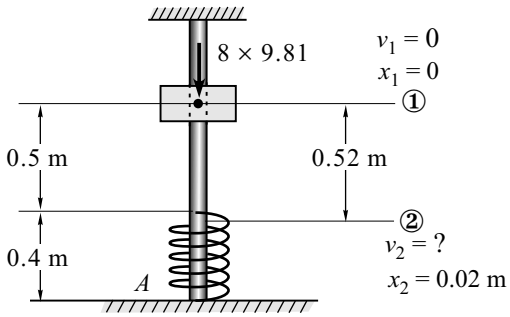

Fig. 14.7(b)

Total displacement = 500 + 20 = 520 mm

s = 0.52 m

By work - energy principle, we have

Work done = Change in kinetic energy

$$8 \times 9.81 \times 0.52 + \frac{1}{2} \times 60000 \times (0 - 0.02^2) = \frac{1}{2} \times 8 \times v_2^2 - 0$$

$$28.8096 = 4\, v_2^2$$

$$v_2 = 2.684 \text{ m/s}$$

Problem 8

A collar of 15 kg mass is at rest at 'A'. It can freely slide on a vertical smooth rod AB. The collar is pulled up with a constant force F = 600 N applied as shown in Fig. 14.E8. Unstretched length of spring is 1 m. Calculate velocity of the collar when it reaches position B. *Given* : Spring constant k = 3 N/mm. AC is horizontal.

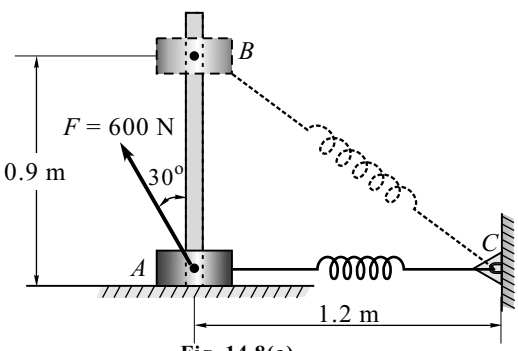

Fig. 14.8(a)

Solution

Given : k = 3 N/mm = 3000 N/m

At position ①

$v_1 = 0$

$x_1 = 1.2 - 1 = 0.2$ m

At position ②

$v_2 = 0$

$x_2 = (BC) - 1 = 1.5 - 1$

$= 0.5$ m

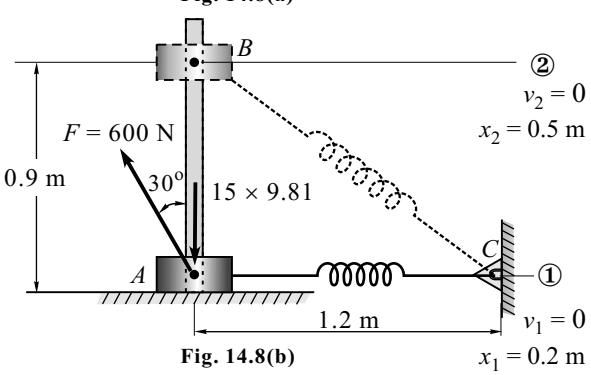

Fig. 14.8(b)

By work - energy principle

Work done = Change in kinetic energy

$$600 \cos 30^{o} \times 0.9 - 15 \times 9.81 \times 0.9 + \frac{1}{2} \times 3000(0.2^2 - 0.5^2)$$

$$= \frac{1}{2} \times 15 \times v_2^2 - 0$$

$$20.22 = 7.5\, v_2^2$$

$$v_2 = 1.64 \text{ m/s } (\uparrow)$$

Problem 9

A collar A of 10 kg mass moves in vertical guide as shown in Fig. 14.9(a). Neglecting the friction between the guide and the collar, find its velocity when it passes through position ② after starting from rest in position ①. The spring constant is 200 N/m and the free length of the spring is 200 mm.

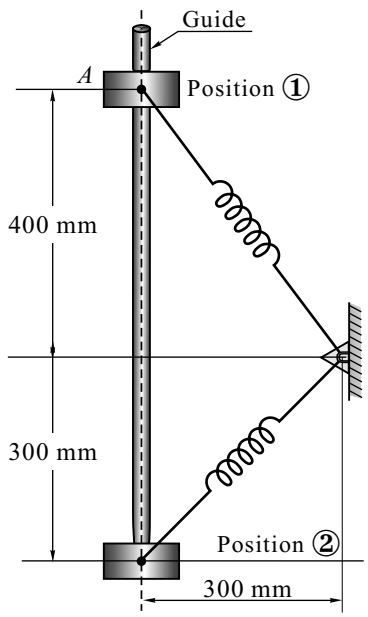

Fig. 14.9(a)

Solution

Given : $k = 200$ N/m

Free length of spring = 200 mm = 0.2 m

At position ①

$x_1 = 500 - 200 = 300$ mm

$x_1 = 0.3$ m

$v_1 = 0$

At position ②

$x_2 = 424.26 - 200 = 224.26$ mm

$x_2 = 0.224$ m

$v_2 = ?$

By work - energy principle, we have

Work done = Change in kinetic energy

$$10 \times 9.81 \times 0.7 + \frac{1}{2} \times 200 \times (0.3^2 - 0.224^2) = \frac{1}{2} \times 10 \times v_B^2 - 0$$

$$72.65 = 5\, v_B^2$$

$$v_2 = 3.81 \text{ m/s}$$

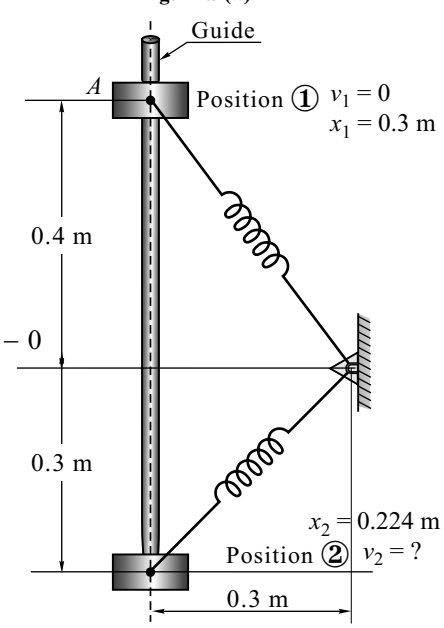

Fig. 14.9(b)

Problem 10

The mass m = 1.8 kg slides from rest at A along the frictionless rod bent into a quarter circle. The spring with modulus k = 16 N/m has an unstretched length of 400 mm.

(i) Determine the speed of m at B.

(ii) If the path is elliptical what is the speed at B.

Solution

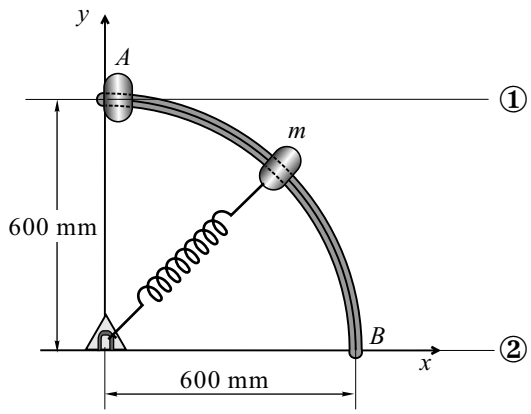

Fig. 14.10(a)

(i) At position ①

$v_1 = 0$

$x_1 = (600 - 400) = 200$ mm

$x_1 = 0.2$ m

At position ②

$v_2 = ?$

$x_2 = (600 - 400) = 200$ mm

$x_2 = 0.2$ m

By work - energy principle, we have

Work done = Change in kinetic energy

$$mgh + \frac{1}{2}k(x_1^2 - x_2^2) = \frac{1}{2}mv_2^2 - \frac{1}{2}mv_1^2$$

$$1.8 \times 9.81 \times 0.6 + \frac{1}{2} \times 16 \times (0.2^2 - 0.2^2) = \frac{1}{2} \times 1.8 \times v_2^2 - 0$$

$v_2 = 3.43$ m/s

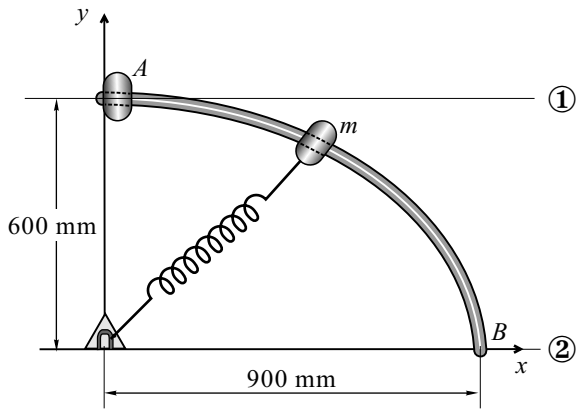

Fig. 14.10(b)

(ii) At position ①

$v_1 = 0$

$x_1 = (600 - 400) = 200$ mm

$x_1 = 0.2$ m

At position ②

$v_2 = ?$

$x_2 = (900 - 400) = 500$ mm

$x_2 = 0.5$ m

By work - energy principle, we have

Work done = Change in kinetic energy

$$mgh + \frac{1}{2}k(x_1^2 - x_2^2) = \frac{1}{2}mv_2^2 - \frac{1}{2}mv_1^2$$

$$1.8 \times 9.81 \times 0.6 + \frac{1}{2} \times 16 \times (0.2^2 - 0.5^2) = \frac{1}{2} \times 1.8 \times v_2^2 - 0$$

$v_2 = 3.15$ m/s

Problem 11

A 2 kg collar M is attached to a spring and slides without friction in a vertical plane along the curved rod ABC as shown in Fig. 14.11. The spring has an undeformed length of 100 mm and its constant is 800 N/m. If the collar is released from rest at A, determine its velocity **(i)** as it passes through B, and **(ii)** as it reaches C.

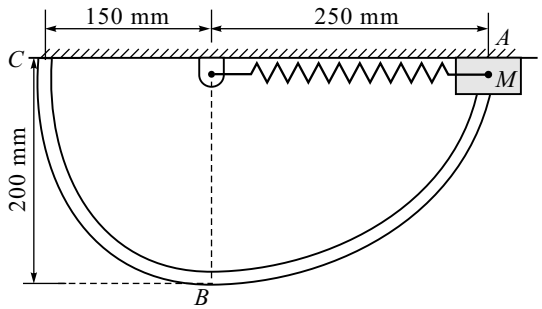

Fig. 14.11

Solution

(i) At position *A*

Deformation of spring $x_A = 250 - 100 = 150$ mm

$x_A = 0.15$ m

It is at zero height so mgh = zero

Block is starting from rest.

$\therefore$ K.E. = zero

Total energy at position A = K.E. + P.E. + Strain energy (S.E.)

$$= 0 + 0 + \frac{1}{2} \times 800 \times 0.15^2$$

$U_{\text{total}} = 9$ joule

(ii) At position *B*

Deformation of spring $x_B = 200 - 100 = 100$ mm

$x_B = 0.1$ m

Height w.r.t. origin = –200 mm = –0.2 m

Total energy is conserved.

Total energy at position A = Total energy at position B

U_{total} = K.E. + P.E. + S.E.

$$9 = \frac{1}{2} \times 2 + v_B^2 + 2 \times 9.81 \times (-0.2) + \frac{1}{2} \times 800 \times 0.1^2$$

$v_B = 2.99$ m/s

(iii) At position *C*

Deformation of spring $x_C = 150 - 100 = 50$ mm

$x_C = 0.05$ m

Height w.r.t. origin = zero

Total energy is conserved.

U_{total} = K.E. + P.E. + S.E.

$$9 = \frac{1}{2} \times 2 \times v_C^2 + 0 + \frac{1}{2} \times 800 \times 0.05^2$$

$v_C = 2.83$ m/s

Problem 12

The slider of 1 kg mass attached to a spring of 400 N/m stiffness and 0.5 m unstretched length is released from A as shown in Fig. 14.12(a). Determine the velocity of the slider as it passes through B and C. Also compute the distance beyond C where the slider will come to the rest.

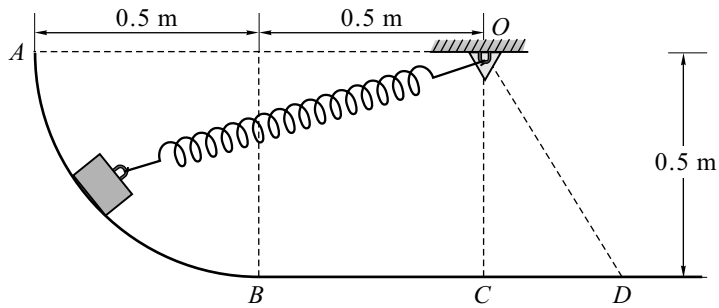

Fig. 14.12(a)

Solution

Redrawing the given Fig. 14.12(b).

Method I

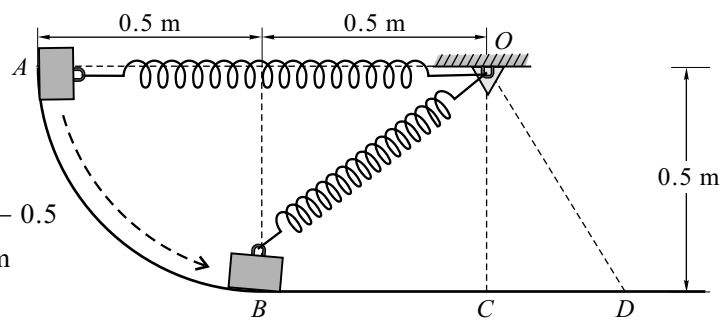

Fig. 14.12(b)

(i) From A to B

At position A	**At position B**
$v_A = 0$	$v_B = ?$
$x_A = 0.5$ m	$x_B = 0.707 - 0.5$
	$x_B = 0.207$m

Displacement $s = 0.5$ m

By work - energy principle, we have

Work done = Change in kinetic energy

$$1 \times 9.81 \times 0.5 + \frac{1}{2} \times 400\,(0.5^2 - 0.207^2) = \frac{1}{2} \times 1 \times v_B^2 - 0$$

$$v_B = 9.63 \text{ m/s}$$

(ii) From A to C

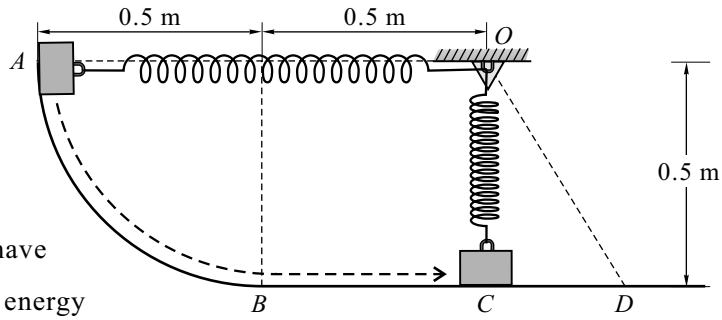

Fig. 14.12(c)

At position A	**At position C**
$v_A = 0$	$v_C = ?$
$x_A = 0.5$ m	$x_C = 0$

Displacement $s = 0.5$ m

By work - energy principle, we have

Work done = Change in kinetic energy

$$1 \times 9.81 \times 0.5 + \frac{1}{2} \times 400\,(0.5^2 - 0^2) = \frac{1}{2} \times 1 \times v_C^2 - 0$$

$$v_C = 10.48 \text{ m/s}$$

(iii) From *A* to *D*

At position *A*	**At position *D***
$v_A = 0$	$v_D = 0$
$x_A = 0.5$ m	$x_D = ?$

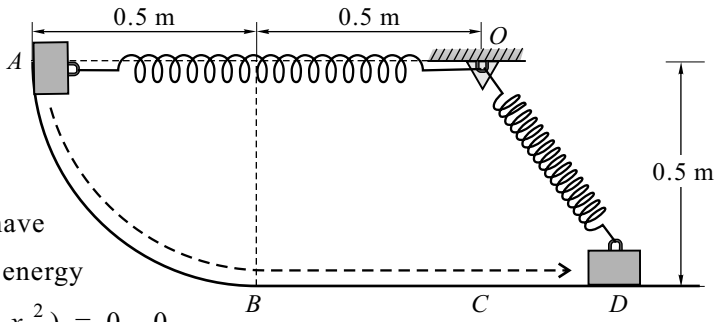

Fig. 14.12(d)

Displacement $s = 0.5$ m

By work - energy principle, we have

Work done = Change in kinetic energy

$$1 \times 9.81 \times 0.5 + \frac{1}{2} \times 400\,(0.5^2 - x_D^2) = 0 - 0$$

$x_D = 0.524$

OD = Unstretched length of spring + x_D = 0.5 + 0.524 = 1.024 m

Distance beyond C to D

$$CD = \sqrt{(OD)^2 - (OC)^2} = \sqrt{(1.024)^2 - (0.5)^2} = 0.89 \text{ m}$$

Method II

Total Energy = K.E. ± P.E. + S.E.

$$\text{T.E.} = \frac{1}{2} mv^2 \pm mgh + \frac{1}{2} kx^2$$

(i) At position *A* ($v_A = 0,\ x_A = 0.5,\ h = 0$)

$$\text{T.E.} = 0 + 0 + \frac{1}{2} \times 400 \times 0.5^2 = 50 \text{ joules}$$

(ii) At position *B* ($v_B = ?,\ x_B = 0.207,\ h = -0.5$ m)

T.E. = K.E. ± P.E. + S.E.

$$50 = \frac{1}{2} \times 1 \times v_B^2 - 1 \times 9.81 \times 0.5 + \frac{1}{2} \times 400 \times 0.207^2$$

$v_B = 9.63$ m/s

(iii) At position *C* ($v_C = ?,\ x_C = 0,\ h = -0.5$ m)

T.E. = K.E. ± P.E. + S.E.

$$50 = \frac{1}{2} \times 1 \times v_C^2 - 1 \times 9.81 \times 0.5 + \frac{1}{2} \times 400 \times 0$$

$v_C = 10.48$ m/s

(iv) At position *D* ($v_D = ?,\ x_D = ?,\ h = -0.5$ m)

T.E. = K.E. ± P.E. + S.E.

$$50 = 0 - 1 \times 9.81 \times 0.5 + \frac{1}{2} \times 400\, x_D^2$$

$x_D = 0.524$ m

OD = Unstrected length of spring + x_D^2 = 0.5 + 0.524 = 1.024 m

Distance beyond C to D

$$CD = \sqrt{(OD)^2 - (OC)^2} = \sqrt{(1.024)^2 - (0.5)^2} = 0.89 \text{ m}$$

Problem 13

A 1 kg collar is attached to a spring and slides without friction along a circular rod which lies in horizontal plane as shown in Fig. 14.E13. The spring has a constant k = 250 N/m and is undeformed when collar is at B. Knowing that collar passes through point D with a speed of 1.8 m/s, determine the speed of the collar when it passes through point C and point B.

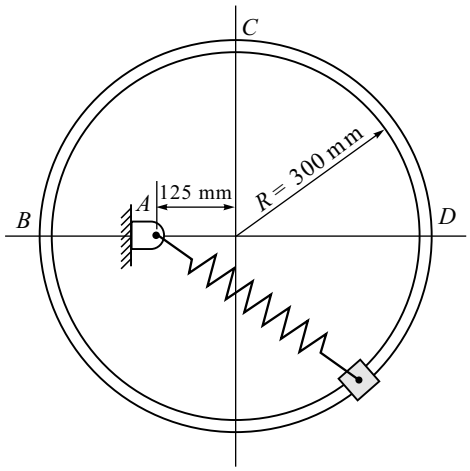

Fig. 14.13(a)

Solution

Undeformed length of spring is at B,

$= 300 - 125 = 175$ mm

$= 0.175$ m

Deformation of spring at position D,

$= 125 + 300 - 175 = 250$ mm

$= 0.25$ m

Deformation of spring at position C,

$= \sqrt{125^2 + 300^2} - 175$

$= 325 - 175 = 150$ mm

$= 0.15$ m

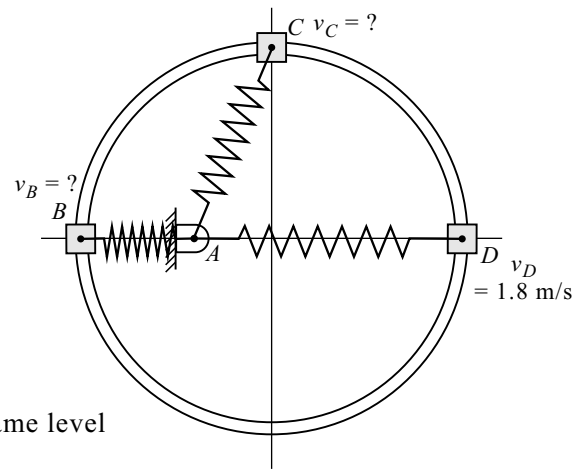

Fig. 14.13(b)

By principle of conservation of energy, we have total energy at any position remains constant.

P.E. throughout the ring is zero because it is at same level (horizontal).

Total energy at position D = Total energy at position B

(K.E. + P.E. + S.E.) at D = (K.E. + P.E. + Spring energy) at B

$$\frac{1}{2} \times 1 \times 1.8^2 + 0 + \frac{1}{2} \times 250 \times 0.25^2 = \frac{1}{2} \times 1 \times v_B^2 + 0 + \frac{1}{2} \times 250 \times 0^2$$

$$9.43 = 0.5 v_B^2$$

$$v_B = 4.343 \text{ m/s}$$

Total energy at position D = Total energy at position C

$$9.43 = \frac{1}{2} \times 1 \times v_C^2 + 0 + \frac{1}{2} \times 250 \times 0.15^2$$

$$9.43 = 0.5 v_C^2 + 2.8125$$

$$\therefore \; v_C = 3.638 \text{ m/s}$$

Problem 14

The 10 kg slider A moves with negligible friction up the inclined guide. The attached spring has stiffness of 60 N/m and is stretched 0.6 m in position A where the slider is released from rest. The 250 N is constant and the pulley offers negligible resistance to the motion of the cord as shown in Fig. 14.14(a). Determine the velocity v_B of the slider as it moves from A to B.

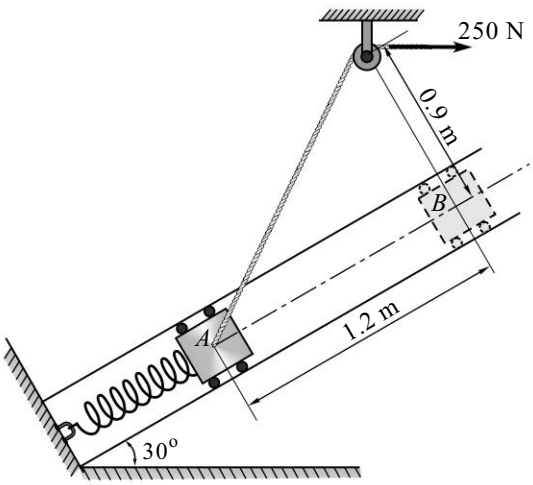

Fig. 14.14(a)

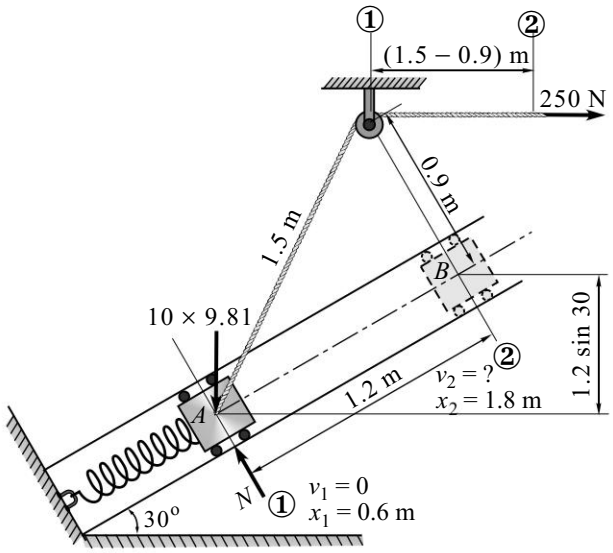

Fig. 14.14(b)

Solution

By work - energy principle, we have

Work done = Change in kinetic energy

$$\frac{1}{2} \times 60(0.6^2 - 1.8^2) - 10 \times 9.81 \times 1.2 \sin 30^\circ + 250(1.5 - 0.9) = \frac{1}{2} \times 10 \times v_2^2 - 0$$

$$v_2 = v_B = 0.974 \text{ m/s}$$

Problem 15

A precompressed spring compressed to 0.2 m is held by a latch mechanism OA as shown in Fig. 14.15(a). When the latch is released the spring propels, a 30 kg machine part which is being heat treated at A up the inclined plane onto a conveyor belt at B. The coefficient of friction between machine part and incline is 0.1. The desired speed of machine part when it reaches the top of inclined is 5 m/s.

Determine the spring constant k in kN/m that engineer must use. Angle of inclination of plane is 30° with horizontal.

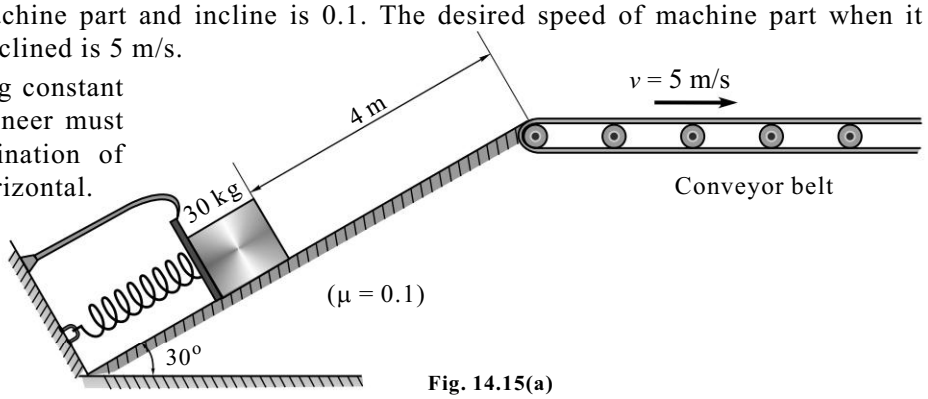

Fig. 14.15(a)

Solution

F.B.D. of 30 kg block on inclination

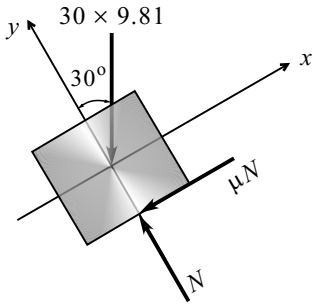

Fig. 14.15(b) : F.B.D. of Block

At position ① **At position ②**

$v_1 = 0$ $v_2 = 5$ m/s

$x_1 = 0.2$ m $x_2 = 0$

Displacement = 4 m, Spring constant = k N/m = ?

By work - energy principle, we have,

Work done = Change in kinetic energy

$$-30 \times 9.81 \sin 30^\circ \times 4 - 0.1 \times 30 \times 9.81 \cos 30^\circ \times 4 + \frac{1}{2} k (0.2^2 - 0^2)$$

$$= \frac{1}{2} \times 30 \times 5^2 - 0$$

$k = 53277.43$ N/m

$\therefore\ k = 53.28$ kN/m

Problem 16

A 20 N block is released from rest. It slides down the inclined having μ = 0.2 as shown in Fig. 14.16(a). Determine the maximum compression of the spring and the distance moved by the block when the energy is released from compressed spring. Springs constant k = 1000 N/m.

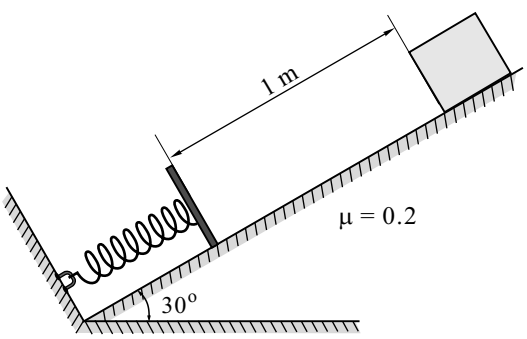

Fig. 14.16(a)

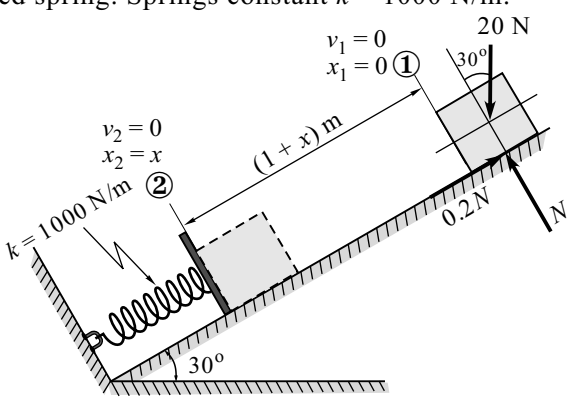

Fig. 14.16(b)

Solution

Part (i) Maximum compression of the spring

Let x be the maximum deformation of spring at position ② where the block comes to rest ($v_2 = 0$).

By work - energy principle, we have

Work done = Change in kinetic energy

$$\frac{1}{2} \times 1000(0^2 - x^2) + 20 \sin 30^\circ (1 + x)$$
$$- 0.2 \times 20 \cos 30^\circ (1 + x) = 0 - 0$$

$\therefore\ x = 0.121$ m

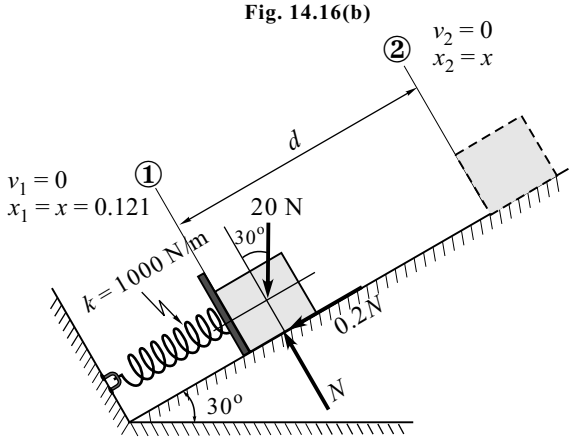

Fig. 14.16(c)

Part (ii) Distance moved by the block

By work - energy principle, we have

Work done = Change in kinetic energy

$$\frac{1}{2} \times 1000(0.121^2 - 0^2) - 20 \sin 30^o \times d - 0.2 \times 20 \cos 30^o \times d = 0 - 0$$

$\therefore\ d = 0.5437$ m

Problem 17

A wagon weighing 490 kN starts from rest, runs 30 m down on the inclined surface having slope 1 in 100 and strikes a post shown in Fig. 14.E17. If the rolling resistance of the track is 5 N/kN, find velocity of wagon when it strikes the post. If the impact is to be cushioned by means of bumper spring having k = 12.7 kN/mm, determine the maximum compression of the bumper spring.

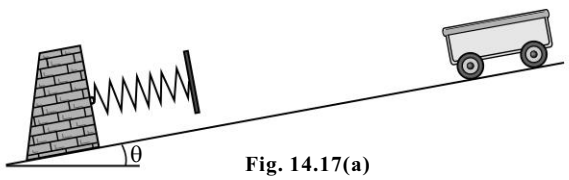

Fig. 14.17(a)

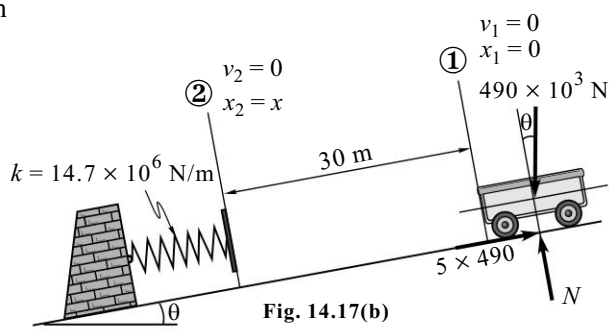

Fig. 14.17(b)

Solution

Let x be the maximum deformation of bumper spring.

By work - energy principle, we have

Work done = Change in K.E.

$$\frac{1}{2} \times 14.7 \times 10^6(0^2 - x^2) + 490 \times 10^3 \sin\theta \times 30 - 5 \times 490 \times 30 = 0 - 0 \qquad \left[\begin{array}{l} \sin\theta \approx \tan\theta = \frac{1}{100} \\ \therefore\ \theta = 0.573^o \end{array}\right]$$

$\therefore\ x = 0.1$ m (Maximum compression of bumper spring)

Velocity of wagon when it strikes the bumper

By work - energy principle, we have

Work done = Change in K.E.

$$490 \times 10^3 \sin\theta \times 30 - 5 \times 490 \times 30 = \frac{1}{2} \times \frac{490 \times 10^3}{9.81} \times v_2^2 - 0$$

$\therefore\ v_2 = 1.715$ m/s

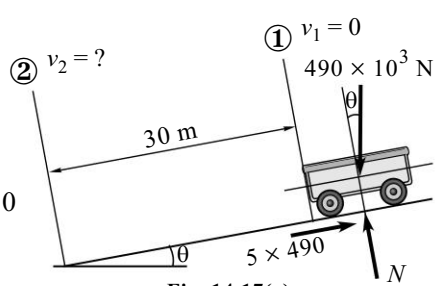

Fig. 14.17(c)

Problem 18

A body of 5 kg mass is released from rest at A as shown in Fig. 14.E18. Surface AB is smooth. For BC, $\mu = 0.2$. If k for spring is 0.8 N/m.

Determine maximum compression of the spring. AB is a quarter circle of $R = 0.7$ m.

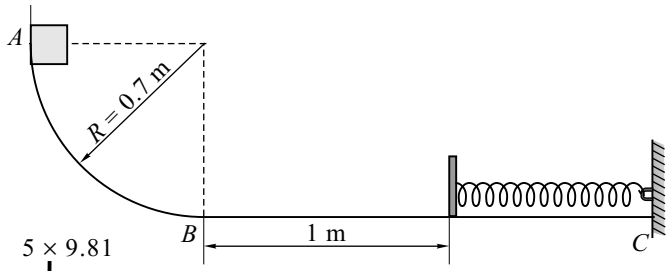

Fig. 14.18(a)

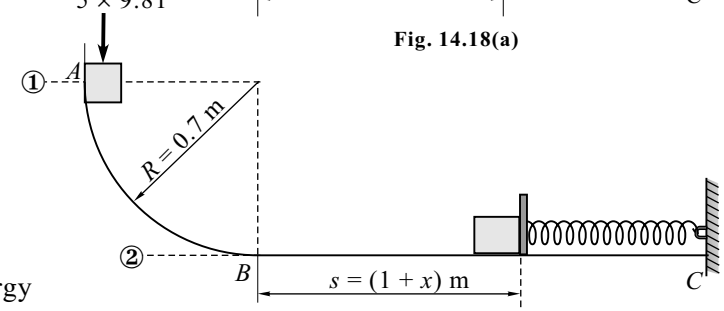

Fig. 14.18(b)

Solution

At position ①	At position ②
$v_1 = 0$	$v_2 = 0$
$x_1 = 0$	$x_2 = x$

By work - energy principle, we have

Work done = Change in kinetic energy

$$mgh - \mu N \times (1 + x) + \frac{1}{2} \times k\,(x_1^2 - x_2^2) = 0 - 0$$

$$5 \times 9.81 \times 0.7 - 0.2 \times 5 \times 9.81(1 + x) + \frac{1}{2} \times 800\,(0^2 - x^2) = 0$$

$$34.335 - 9.81(1 + x) - 400x^2 = 0$$

$$400x^2 + 9.81x - 24.525 = 0$$

Solving the quadrate equation, we get

$$x = 0.236 \text{ m}$$

Problem 19

Figure 14.E19 shows a block of 0.5 kg mass moves within a smooth vertical slot. If it starts from rest, when the attached spring is in the unstretched position at A, determine the constant vertical force F which must be applied to the cord, so that block attains a speed of $v_B = 2.5$ m/s, when it reaches B, i.e., $s_B = 0.15$ m. Neglect the mass of cord and pulley.

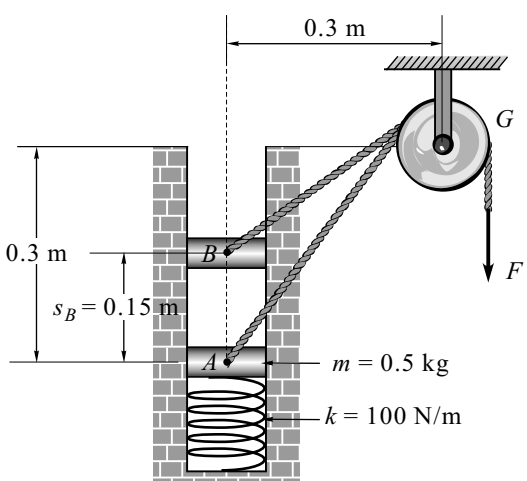

Fig. 14.19(a)

Solution

$$l_1 = \sqrt{0.3^2 + 0.3^2} = 0.424 \text{ m}$$

$$l_2 = \sqrt{0.15^2 + 0.3^2} = 0.335 \text{ m}$$

$$d = l_1 - l_2 = 0.424 - 0.335$$

$$d = 0.089 \text{ m}$$

At position ①

$x_1 = 0$

$v_1 = 0$

At position ②

$x_2 = 0.15$

$v_2 = 2.5$ m/s

Displacement of block $s = 0.15$ m

By work - energy principle, we have

Work done = Change in kinetic energy

$$-0.5 \times 9.81 \times 0.15 + \frac{1}{2} \times 100[0^2 - 0.15^2] + F \times 0.089$$

$$= \frac{1}{2} \times 0.05 \times 2.5^2 - 0$$

$$-1.86 + 0.089\,F = 1.5625$$

$$F = 38.46 \text{ N}$$

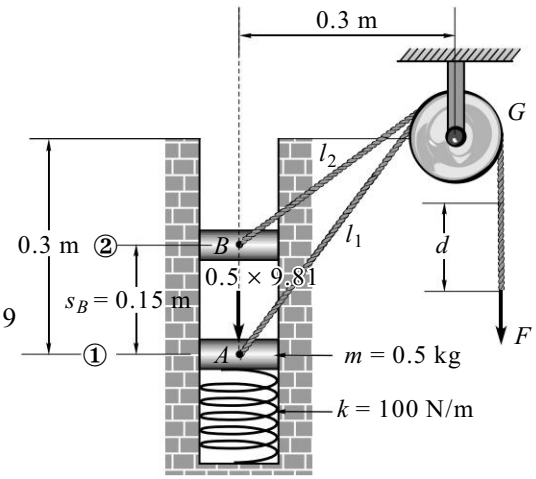

Fig. 14.19(b)

Problem 20

A spring is used to stop a 100 kg package which is moving down a 30° incline. The spring has a constant k = 30 kN/m and is held by cables so that it is initially compressed 90 mm. If the velocity of package is 5 m/s when it is 9 m from the spring, determine the maximum additional deformation of spring in bringing the package to rest. Assume coefficient of friction as 0.2.

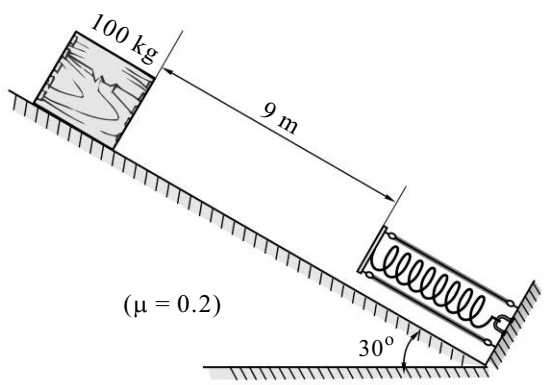

Fig. 14.20(a)

Solution

Let x be the maximum additional deformation of spring in bringing the package to rest.

At position ①

$v_1 = 5$ m/s

$x_1 = 0.09$ m

At position ②

$v_2 = 0$

$x_2 = (x + 0.09)$ m

Displacement $s = (9 + x)$ m, $k = 30{,}000$ N/m

By work - energy principle, we have

Work done = Change in kinetic energy

$$100 \times 9.81 \sin 30^\circ \times (9 + x) - 0.2 \times 100 \times 9.81 \cos 30^\circ\,(9 + x)$$

$$+ \frac{1}{2} \times 30000[(0.09)^2 - (x + 0.09)^2] = 0 - \frac{1}{2} \times 10 \times 5^2$$

$$15000x^2 + 2379.41x - 2885.31 = -1250$$

$$15000x^2 + 2379.41x - 1635.31 = 0$$

Solving the quadratic equation, we get

$$x = 0.4517 \text{ m}$$

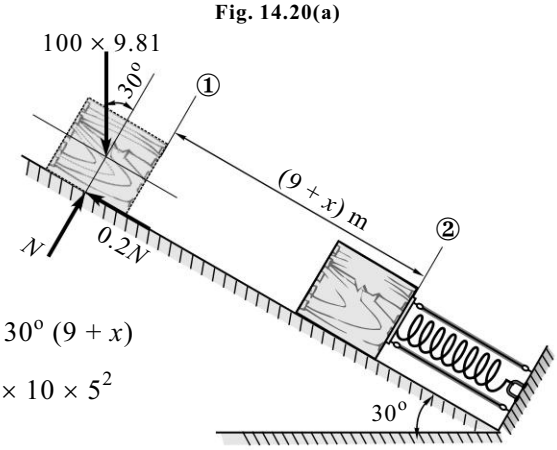

Fig. 14.20(b)

Problem 21

In Fig. 14.21(a), a block P of 50 N weight is pulled so that the extension in the spring is 10 cm. The stiffness of the spring is 4 N/cm and the coefficient of friction between the block and the plane O-X is $\mu = 0.3$. Find **(i)** the velocity of the block as the spring returns to its undeformed state, and **(ii)** the maximum compression in the spring.

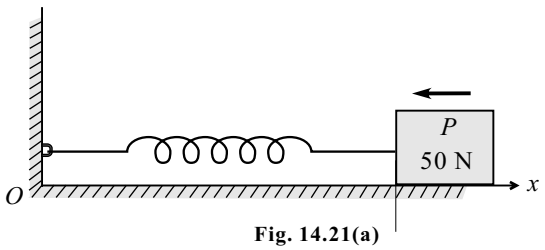

Fig. 14.21(a)

Solution

$k = 4$ N/cm, $= 400$ N/m

(i) At position ①

$v_1 = 0$

$x_1 = 10$ cm $= 0.1$ m

(ii) At position ②

$v_2 = ?$

$x_2 = 0$

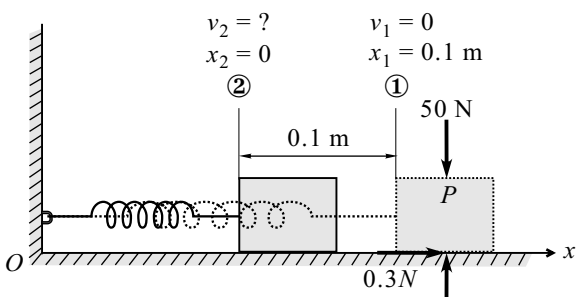

Fig. 14.21(b)

Consider work - energy principle from position ① to position ②

Displacement = 10 cm = 0.1 m

Work done = Change in kinetic energy

$$-0.3 \times 50 \times 0.1 + \frac{1}{2} \times 400\,(0.1^2 - 0^2) = \frac{1}{2} \times \frac{50}{9.81}\, v_2^2 - 0$$

$$0.5 = 2.548\, v_2^2$$

$$v_2 = 0.44 \text{ m/s } (\leftarrow)$$

(iii) At position ③

$v_3 = 0$

$x_3 = x$

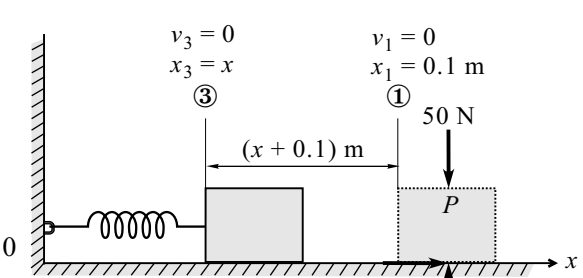

Fig. 14.21(c)

Consider work - energy principle from position ① to ③

Work done = Change in kinetic energy

$$-0.3 \times 50\,(0.1 + x) + \frac{1}{2} \times 400\,(0.1^2 - x^2) = 0$$

$$-1.5 - 15x + 2 - 200x^2 = 0$$

$$-200x^2 - 15x + 0.5 = 0$$

Solving the quadratic equation, we get

$$x = 0.025 \text{ m}$$

Problem 22

Two springs each having stiffness of 0.5 N/cm are connected to ball B having a mass of 5 kg in a horizontal position producing initial tension of 1.5 m in each spring as shown in Fig. 14.E22. If the ball is allowed to fall from rest what will be its velocity after it has fallen through a height of 15 cm.

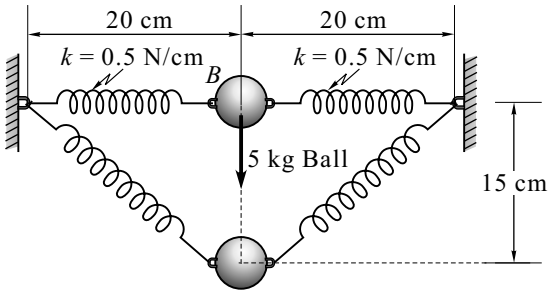

Fig. 14.22(a)

Solution

Method I

Initial position tension = 1.5 N

$T = kx$

$1.5 = (0.5)(x)$

$x = 3$ cm (Deformation in initial position)

$\therefore$ Free length of spring $= 20 - 3 = 17$ cm

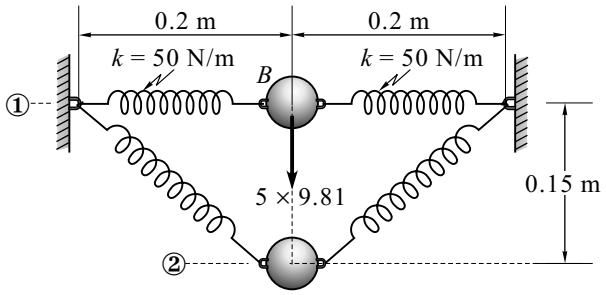

Fig. 14.22(b)

At position ①

$v_1 = 0$

$x_1 = 3$ cm

$\therefore x_1 = 0.03$ m

Displacement $h = 15$ cm

$\therefore h = 0.15$ m

At position ②

$v_2 = ?$

$x_2 = (25 - 17) = 8$ cm

$x_2 = 0.08$ m

Spring constant $k = 0.5$ N/cm

$\therefore k = 50$ N/m

By principle of work - energy, we have

Work done = Change in kinetic energy

$$5 \times 9.81 \times 0.15 + \left[\frac{1}{2} \times 50(0.03^2 - 0.08^2)\right] \times 2 = \frac{1}{2} \times 5 \times v_2^2 - 0$$

$v_2 = 1.68$ m/s

Method II

By principle of conservation of energy

Total energy = K.E. + P.E. + S.E.

Total energy remains constant at any position.

Total energy at position ① = Total energy at position ②

(K.E. + P.E. + S.E.) at position ① = (K.E. + P.E. + S.E.) at position ②

$$\frac{1}{2} \times 5 \times 0^2 + 5 \times 9.81 \times 0 + \frac{1}{2} \times 50 \times 0.03^2 = \frac{1}{2} \times 5 \times v_2^2 - 5 \times 9.81 \times 0.15 + \frac{1}{2} \times 50 \times 0.08^2$$

$0.0225 = 2.5v_2^2 - 7.3575 + 0.16$

$v_2 = 1.69$ m/s

Problem 23

The cylinder has a mass of 20 kg and is released from rest when $h = 0$ as shown in Fig. 14.E23. Determine its speed when $h = 3$ m. The springs each have an unstretched length of 2 m. ($k = 40$ N/m)

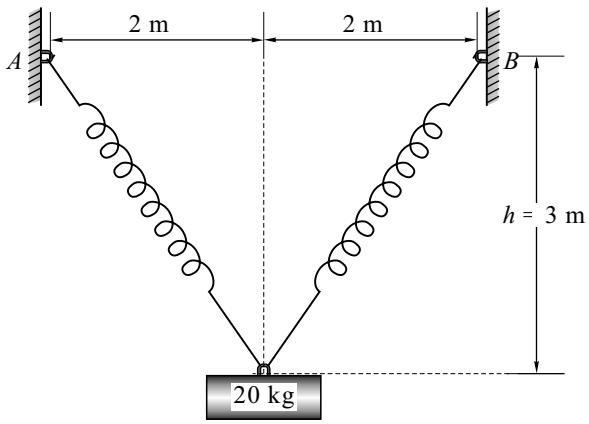

Fig. 14.23(a)

Solution

Free length of spring = 2 m

(i) At position ①

$$x_1 = 0$$

$$v_1 = 0$$

(ii) At position ②

Length of spring $= \sqrt{2^2 + 3^2} = 3.61$ m

$\therefore$ Deformation $x_2 = 3.62 - 2 = 1.61$ m

$v_2 = ?$

By work - energy principle, we have

Work done = Change in kinetic energy

$$20 \times 9.81 \times 3 + 2\left[\frac{1}{2} \times 40(0^2 - 1.61^2)\right] = \frac{1}{2} \times 20 \times v_2^2 - 0$$

$$484.916 = 10\ v_2^2$$

$$v_2 = 6.96 \text{ m/s}$$

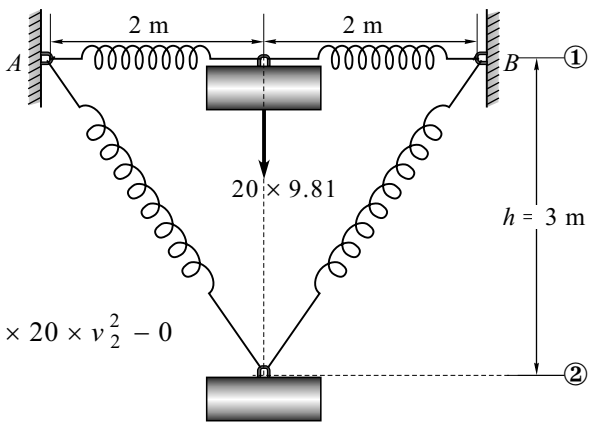

Fig. 14.23(b)

Problem 24

Two springs of 100 mm free length each are connected to each other and at hinges A and B as shown in Fig. 14.E24. The centre C of spring is pulled down together with a 2 kg sphere through a distance of 40 mm. It is then released to project the sphere vertically upward. The stiffness of each spring is 100 N/mm. Calculate **(i)** the velocity with which sphere will pass point C, and **(ii)** how far will it rise above C.

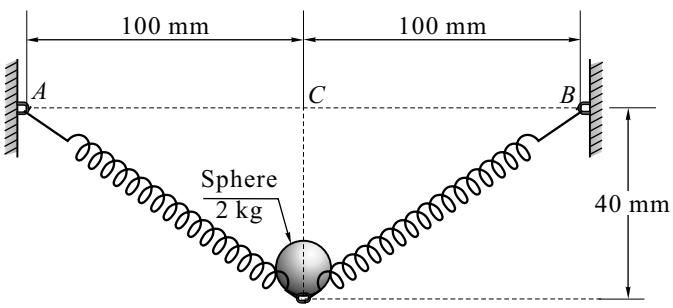

Fig. 14.24(a)

Solution

Case (i)

At position ①

$v_1 = 0$

$x_1 = 0.1077 - 0.1$

$x_1 = 0.0077$ m

At position ②

$v_2 = ?$

$x_2 = 0$

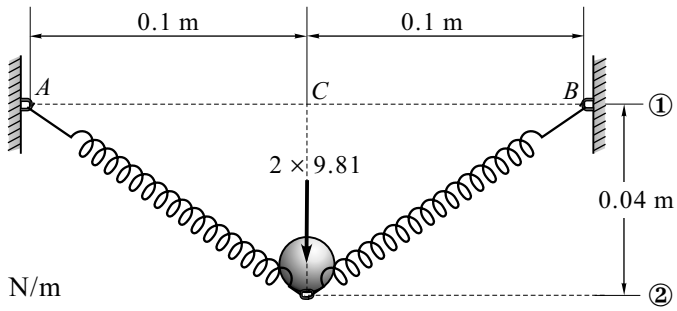

Fig. 14.24(b)

Displacement $s = 40$ mm $= 0.04$ m

Spring constant $k = 1000$ N/mm $= 10^6$ N/m

By work - energy principle, we have

Work done = Change in kinetic energy

$$-2 \times 9.81 \times 0.04 + \left[\frac{1}{2} \times 10^6 (0.0077^2 - 0^2)\right] \times 2 = \frac{1}{2} \times 2 \times v_2^2 - 0$$

$v_2 = 7.65$ m/s

Case (ii)

Let h be the height through which sphere will rise above C

$u = 7.65$ m/s, $v = 0$, $h = ?$

$v^2 = u^2 + 2gh$

$0 = 7.65^2 - 2 \times 9.81\, h$

$h = 2.983$ m

Problem 25

Figure 14.25(a) shows a collar of 20 kg mass which is supported on the smooth rod. The attached springs are undeformed when $d = 0.5$ m. Determine the speed of the collar after the applied force of 100 N causes it to displace so that $d = 0.3$ m. The collar is at rest when $d = 0.5$ m. Use work - energy principle.

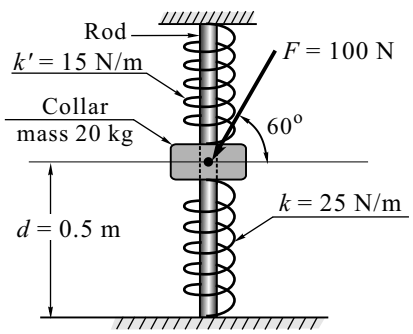

Fig. 14.25(a)

Solution

At position ①

$v_1 = 0$

$x_1 = 0$

At position ②

$v_2 = ?$

$x_2 = 0.2$ m

Displacement $s = 0.2$ m

By work - energy principle,

Work done = Change in kinetic energy

$$20 \times 9.81 \times 0.2 + 100 \sin 60^\circ \times 0.2 + \frac{1}{2} \times 25[0^2 - 0.2^2]$$

$$+ \frac{1}{2} \times 15[0^2 - 0.2^2] = \frac{1}{2} \times 20 \times v_2^2 - 0$$

$55.76 = 10\, v_2^2$

$v_2 = 2.36$ m/s

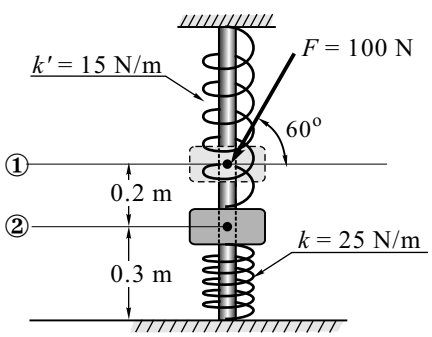

Fig. 14.25(b)

Problem 26

A 5 kg mass drops 2 m upon a spring whose modulus is 10 N/mm. What will be the speed of the block when the spring is deformed 100 mm?

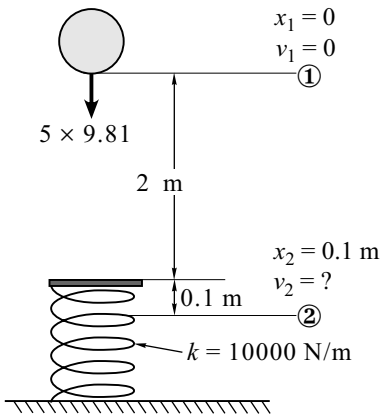

Fig. 14.26

Solution

By work - energy principle, we have

Work done = Change in kinetic energy

$$\frac{1}{2} \times 10000(0^2 - 0.1^2) + 5 \times 9.81 \times 2.1 = \frac{1}{2} \times 5 \times v_2^2 - 0$$

$v_2 = 4.604$ m/s (↓)

Problem 27

An 8 kg plunger is released from rest in the position shown in Fig. 14.27(a) and is stopped by two nested spring. The constant of the outer spring is $k_o = 3$ k N/m and constant of the inner spring $k_i = 10$ kN/m. Determine the maximum deflection of the outer spring.

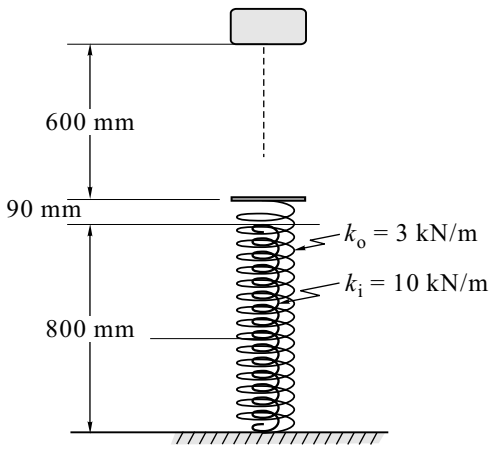

Fig. 14.27(a)

Solution

Let x be the deformation of inner spring.

At position ①	**At position ②**
$v_1 = 0$	$v_2 = 0$
$x_{i1} = 0$	$x_{i2} = x$
$x_{o1} = 0$	$x_{o2} = (0.09 + x)$

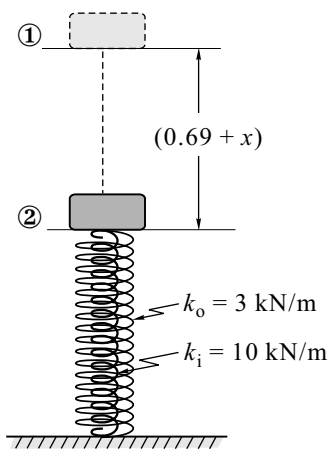

Fig. 14.27(b)

Displacement $s = (0.69 + x)$

By work - energy principle, we have

Work done = Change in kinetic energy

$$8 \times 9.81 \times (0.69 + x) + \frac{1}{2} \times 3000[0^2 - (0.09 + x)^2] + \frac{1}{2} \times 10000(0^2 - x^2) = 0 - 0$$

$x = 0.067$ m $= 67$ mm

∴ The maximum additional deformation of outer spring will be

$d = x + 90$

$d = 157$ mm

Problem 28

A block of mass m = 80 kg is compressed against a spring as shown in Fig. 14.28(a). How far from point B [distance x] will the block strike on the plane at point A. Take free length of spring as 0.9 m and spring stiffness as $k = 40 \times 10^2$ N/m.

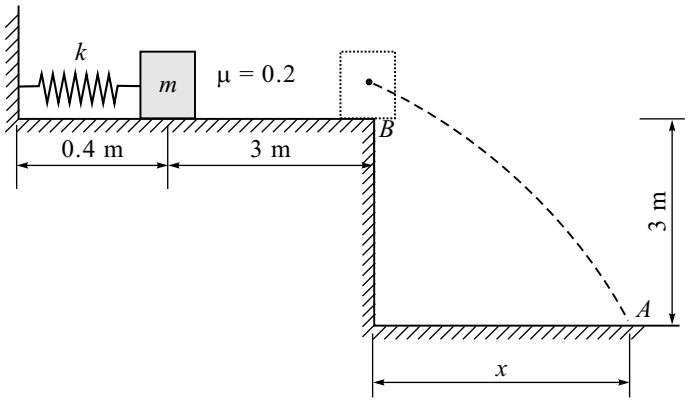

Fig. 14.28(a)

Solution

Refer to Fig. 14.28(b).

(i) By work - energy principle

Work done = Change in kinetic energy

$$\frac{1}{2} \times 4000[0.5^2 - 0^2] - 0.2 \times 80 \times 9.81 \times 3 = \frac{1}{2} \times 80 \times v_2^2 - 0$$

$$500 - 470.88 = 40\, v_2^2$$

$$v_2 = 0.8532 \text{ m/s } (\rightarrow)$$

(ii) Projectile motion from B to A

Vertical motion (under gravity)

$$h = ut + \frac{1}{2} gt^2$$

$$3 = 0 + \frac{1}{2} \times 9.81 \times t^2$$

$$t = 0.7821 \text{ sec}$$

(iii) Horizontal motion (constant velocity)

Displacement = Velocity × Time

$$x = 0.8532 \times 0.7821$$

$$x = 0.6671 \text{ m}$$

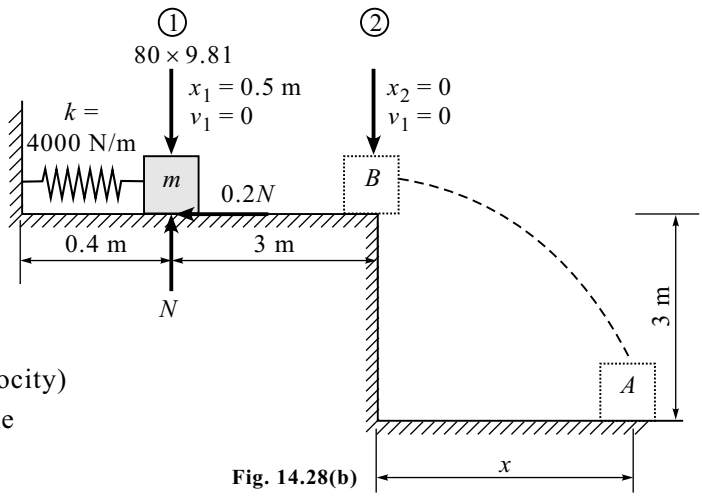

Fig. 14.28(b)

Problem 29

Two blocks of 60 kg and 15 kg are connected to each other by a cable running over a frictionless pulley as shown in Fig. 14.29. The coefficient of friction between the block and the incline is 0.2. Neglecting the mass of the pulley and its axle friction, determine the velocity of the blocks after moving 20 m from rest.

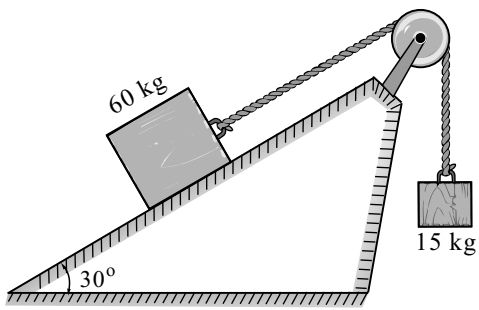

Fig. 14.29

Solution

At position ① $v_1 = 0$

At position ② $v_2 = ?$

Displacement s = 20 m

$$60 \times 9.81 \sin 30^\circ \times 20 - 15 \times 9.81 \times 20 - 0.2 \times 60 \times 9.81 \cos 30^\circ \times 20 = \frac{1}{2} \times (60 + 15)\, v_2^2 - 0$$

$$v_2 = 4.91 \text{ m/s}$$

Problem 30

Two blocks m_A = 10 kg and m_B = 5 kg are connected with cord and pulley system as shown in Fig. 14.30(a). Determine the velocity of each block when system is started from rest and block B gets displacement by 2 m. Consider μ_k = 0.2 between block A and horizontal surface.

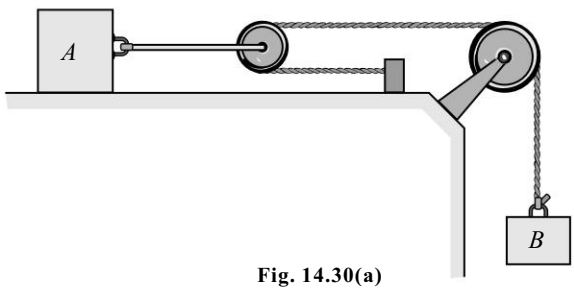

Fig. 14.30(a)

Solution

(i) Kinematic relation

$2Tx_A - Tx_B = 0$

$2x_A - x_B = 0$

$2x_A = x_B$

Differentiating w.r.t. time, we get

$2v_A = v_B$ ..... (I)

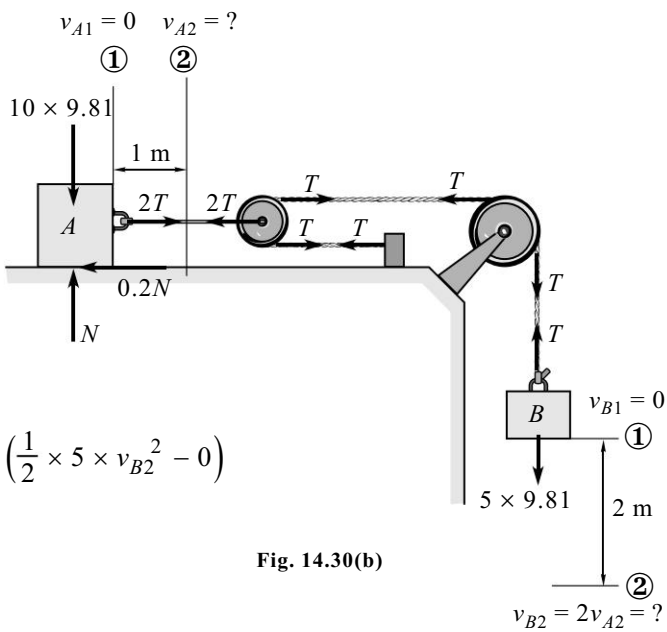

Fig. 14.30(b)

(ii) By work - energy principle, we have

Work done = Change in K.E.

$$5 \times 9.81 \times 2 - 0.2 \times 10 \times 9.81 \times 1 = \left(\frac{1}{2} \times 10 \times v_{A2}^2 - 0\right) + \left(\frac{1}{2} \times 5 \times v_{B2}^2 - 0\right)$$

$98.1 - 19.62 = 5v_{A2}^2 + 2.5v_{B2}^2$

$78.48 = 5v_{A2}^2 + 2.5(2v_{A2})^2$

$78.48 = 15v_{A2}^2$

$v_{A2} = 2.287$ m/s

From Eq. (I), $2v_A = v_B$

$\therefore\ v_{B2} = 4.575$ m/s

Problem 31

In the system shown in Fig. 14.31(a), block m_A = 100 kg and block m_B = 300 kg are connected by inextensible cable and massless and frictionless pulley. If block B is having initial velocity of 2 m/s and travels 10 m downwards along the incline plane then what will be velocities of the blocks A. Consider μ_k = 0.3.

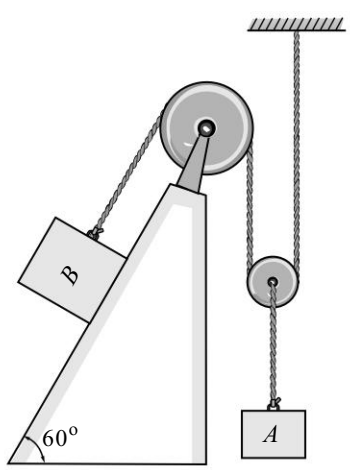

Fig. 14.31(a)

Solution

(i) Kinematic relation

$2Tx_A - Tx_B = 0$

$2x_A - x_B = 0$

$2x_A = x_B$

Differentiating w.r.t. time, we get

$2v_A = v_B$ ..... (I)

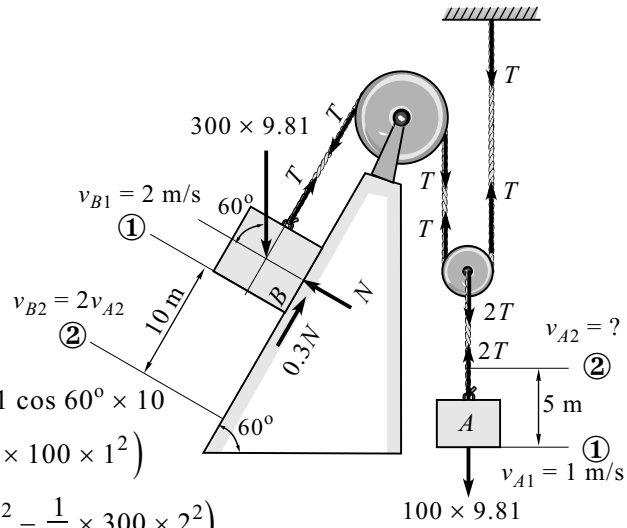

Fig. 14.31(b)

(ii) By work - energy principle, we have

Work done = Change in K.E.

$300 \times 9.81 \sin 60^\circ \times 10 - 0.3 \times 300 \times 9.81 \cos 60^\circ \times 10$

$$- 100 \times 9.81 \times 5 = \left(\frac{1}{2} \times 100 \times v_{A2}^2 - \frac{1}{2} \times 100 \times 1^2\right)$$

$$+ \left(\frac{1}{2} \times 300 \times (2v_{A2})^2 - \frac{1}{2} \times 300 \times 2^2\right)$$

$25487.13 - 4414.5 - 4905 = 50v_{A2}^2 - 50 + 600v_{A2}^2 - 600$

$16167.63 = 650v_{A2}^2 - 650$

$v_{A2} = 5.0865$ m/s

From Eq. (I), $2v_A = v_B$

$\therefore\ v_{B2} = 10.1613$ m/s

Problem 32

Determine the power required for lifting a weight of 10 kN at a constant speed of 2 m/s. If the velocity is later on increased to 3 m/s within a duration of 2 s.

Solution

(i) Consider the F.B.D. of lifting 10 kN at a constant speed of 2 m/s

By Newton's second law, we have

$\sum F_y = ma_y = 0 \qquad (\because\ a_y = 0)$

$T - 10000 = 0 \Rightarrow T = 10{,}000$ N

Power = Force × Velocity = 10,000 × 2 = 20,000 watts.

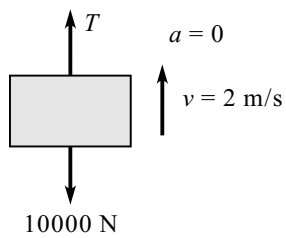

Fig. 14.32(a) : F.B.D.

(ii) Consider the F.B.D. of lifting 10 kN at a constant speed of 3 m/s

$a = \dfrac{v - u}{t} = \dfrac{3 - 2}{2} = 0.5$ m/s^2

By Newton's second law, we have

$\sum F_y = ma_y$

$T - 10000 = \dfrac{10{,}000}{9.81} \times 0.5 = 10509.684$ N

Power = Force × Velocity = 10509.684 × 3

Power = 31529.052 watts

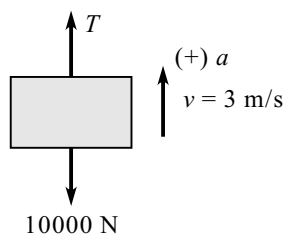

Fig. 14.32(b) : F.B.D.

Problem 33

An elevator E weighs 10000 N when fully loaded. It is connected to 7500 N count weight C and is powered by an electric wire as shown in Fig. 14.33(a). Determine the power required when **(i)** the elevator is moving upward at a constant speed 20 m/s, **(ii)** the elevator is moving downward at a constant speed 20 m/s, and **(iii)** the elevator has an instantaneous velocity of 20 m/s upward and an upward acceleration of 3 m/s^2.

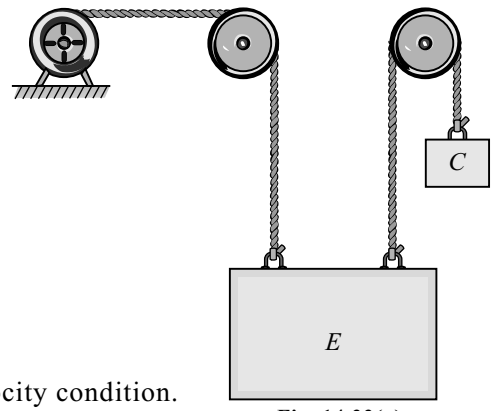

Fig. 14.33(a)

Solution

Cases (i) and (ii) are same because of constant velocity condition.

In both the cases acceleration = zero

Consider the F.B.D. of counterweight *C*

$\sum F_y = ma_y = 0$

$T_1 - 7500 = 0$

$T_1 = 7500$ N

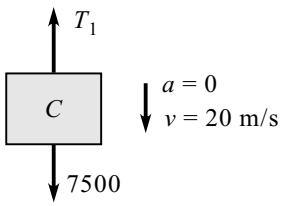

Fig. 14.33(b) : F.B.D. of Weight *C*

Consider the F.B.D. of elevator *E*

$\sum F_y = ma_y = 0 \quad (\because a_y = 0)$

$T_1 + T_2 - 10000 = 0$

$7500 + T_2 - 10000 = 0$

$T_2 = 2500$ N

Power = Force × Velocity = 2500 × 20

Power = 50000 watts ***(i) and (ii)***

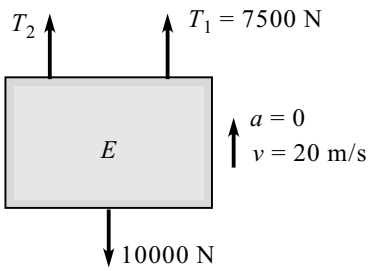

Fig. 14.33(c) : F.B.D. of Elevator *E*

Case (iii)

Consider the F.B.D. of counter weight *C*

By Newton's second law, we have

$\sum F_y = ma_y$

$$7500 - T_1 = \frac{7500}{9.81} \times 3$$

$T_1 = 5206.42$ N

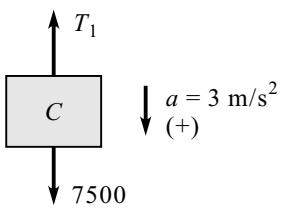

Fig. 14.33(d) : F.B.D. of Weight *C*

Consider the F.B.D. of elevator *E*

By Newton's second law, we have

$\sum F_y = ma_y$

$$T_1 + T_1 - 10000 = \frac{10{,}000}{9.81} \times 3$$

$T_2 = 7851.68$ N

Power = Force × Velocity = 7851.68 × 20

Power = 157033.6 watts

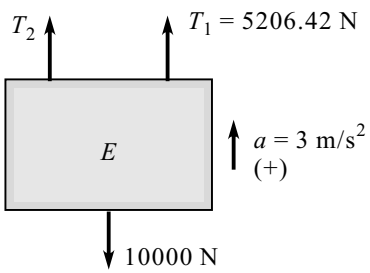

Fig. 14.33(e) : F.B.D. of Elevator *E*

Problem 34

A train weighing 4,00,000 kN is running up an inclined plane 1 in 100 at uniform speed of 54 kmph as shown in Fig. 14.34. If the total resistance to motion is 0.5% of its weight, find the power exerted by the steam engine. If the steam is cut off while the train is ascending the gradient, how far the train will go up the plane, before coming to rest, assuming the frictional resistance to remain constant during the travel.

Solution

(i) Consider the F.B.D. of train

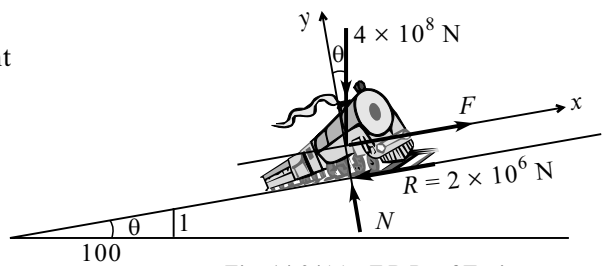

Fig. 14.34(a) : F.B.D. of Train

Total Resistance $R = 0.5\%$ of weight

$$R = \frac{0.5}{100} \times 4 \times 10^8$$

$$R = 2 \times 10^6 \text{ N}$$

$$\tan\theta = \frac{1}{100}$$

$$\theta = 0.5729^\circ$$

$$v = 54 \text{ kmph}$$

$$\therefore\ v = 15 \text{ m/s (constant)}$$

$$\therefore\ a_x = 0$$

By Newton's second law, we have

$$\sum F_x = ma_x = 0 \qquad (\because\ a_x = 0)$$

$$F - 2 \times 10^6 - 4 \times 10^8 \sin\theta = 0$$

$$F = 6 \times 10^6 \text{ N}$$

Power exerted by steam engine is

Power = Force × Velocity

$$\text{Power} = 6 \times 10^6 \times 15$$

$$\text{Power} = 90 \times 10^6 \text{ watts}$$

$$\text{Power} = 90 \text{ MW}$$

(ii) When the steam engine is cut off, $F = 0$

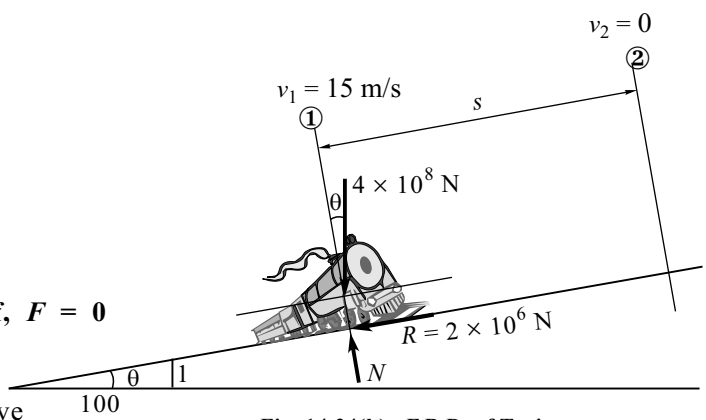

Fig. 14.34(b) : F.B.D. of Train When Steam Engine is Cut Off

Consider F.B.D. of train.

By work - energy principle, we have

Work done = Change in kinetic energy

$$-4 \times 10^8 \sin\theta \times s - 2 \times 10^6 \times s = 0 - \frac{1}{2} \times \frac{4 \times 10^8}{9.81} \times 15^2$$

$$s = 764.5 \text{ m}$$

SUMMARY

- **Work Done :** It is the product of the force and the displacement in the direction of force.

  Work done $(U) = F \cos\theta \times s$

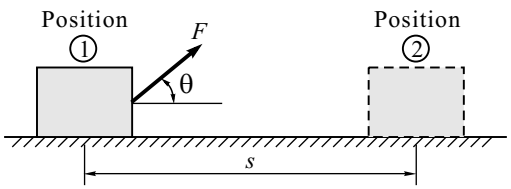

- **Work Done by Spring Force**

  Work done = Spring force × Deformation

  $$U = \frac{1}{2} k\left(x_1^2 - x_2^2\right)$$

  where k is the spring stiffness (N/m)

  x_1 is the deformation of spring at position 1.

  x_2 is the deformation of spring at position 2.

- **Work Done by Frictional Force**

  Work done = –Frictional force × Displacement

  $U = -\mu N \times s$

- **Work - Energy Principle :** Total work done is equal to the change in kinetic energy.

- **Kinetic Energy :** It is the energy possessed by a particle by virtue of its motion.

  Kinetic energy (K.E.) $= \frac{1}{2} mv^2$

- **Potential Energy :** It is the energy possessed by a particle by virtue of its position.

- **Principle of Conservation of Energy :** When a particle changes its position under the action of only conservative forces then the total energy remains constant.

  Total energy = Kinetic energy + Potential energy + Strain energy of spring

  Total energy $= \frac{1}{2} mv^2 \pm mgh + \frac{1}{2} kx^2$

- **Power :** It is defined as the rate of doing work.

  $$\text{Power} = \frac{\text{Work}}{\text{Time}} = \frac{\text{Force} \times \text{Displacement}}{\text{Time}} = \text{Force} \times \text{Velocity}$$

EXERCISES

[I] Problems

1. The 17.5 kN automobile shown in Fig. 14.E1, is travelling down the 10° inclined road at a speed of 6 m/s. If the driver wishes to stop his car, determine how far 's' his tyres skid on the road if he jams on the brakes, causing his wheels to lock. the coefficient of kinetic friction between the wheels and the road is $\mu_k = 0.5$.

[***Ans.*** $s = 5.75$ m]

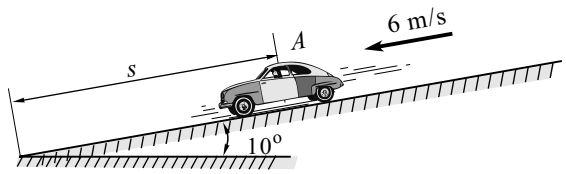

Fig. 14.E1

2. Packages are thrown down on incline at A with a velocity of 1.2 m/s as shown in Fig. 14.E2. The package slide along the surface ABC to a conveyer belt which moves with a velocity of 2.4 m/s. Knowing that $\mu_k = 0.25$ between the packages and the surface ABC, determine the distance 'd' if the packages are to arrive at C with a velocity of 2.4 m/s.

[***Ans.*** $d = 6.08$ m]

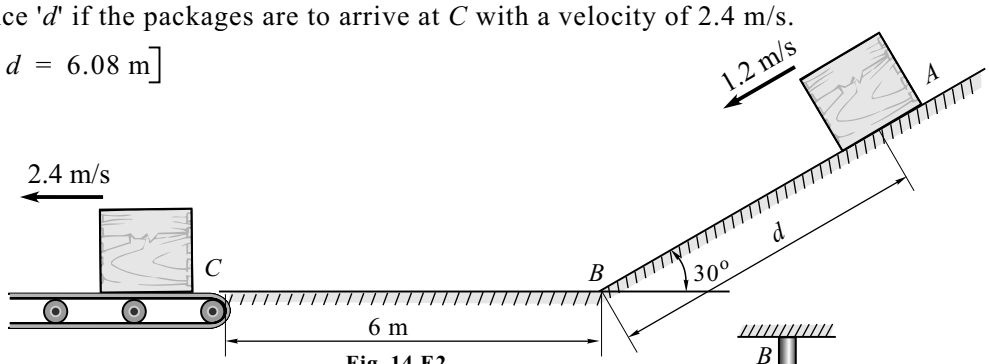

Fig. 14.E2

3. The 6 kg cylindrical collar is released from rest in the position shown in Fig. 14.E3 and drops onto the spring. Calculate the velocity v of the cylinder when the spring has been compressed 50 mm.

[***Ans.*** $v = 2.41$ m/s]

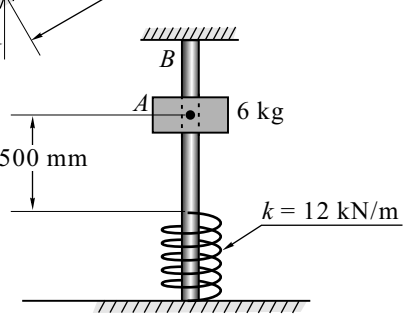

Fig. 14.E3

4. A 24 N package is placed with no initial velocity at the top of a incline shown in Fig. 14.E4. Knowing that μ_k between the package and the surface is 0.25. Determine **(a)** how far the package will slide on the horizontal portion, **(b)** the maximum velocity reached by the package, and **(c)** the amount of the energy dissipated due to friction between A and B.

[***Ans.*** **(a)** 10.02 m **(b)** 7.02 m/s **(c)** 131.97 J]

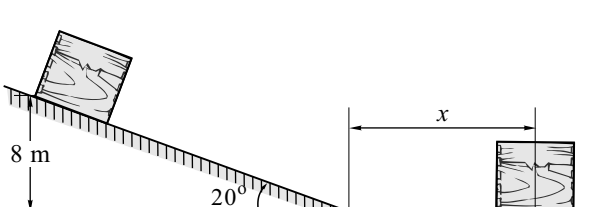

Fig. 14.E4

5. A 20 N block slides with initial velocity of 2 m/s down an inclined plane on to a spring of 1000 N/m modulus for a distance of 1 m as shown in Fig. 14.E5. Find maximum compression of the spring neglecting friction.

[***Ans.*** 177.63 mm]

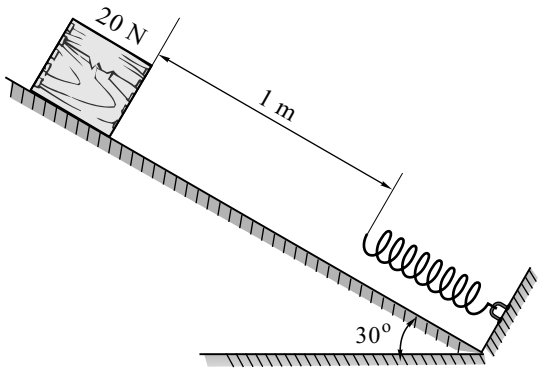

Fig. 14.E5

6. A collar of 5 kg mass can slide along a vertical bar as shown in Fig. 14.E6. The spring attached to the collar is in undeformed state of 20 cm length and 500 N/m stiffness. If the collar is suddenly released, find the velocity of the collar if it moves 15 cm down as shown in the figure.

[***Ans.*** 1.66 m/s]

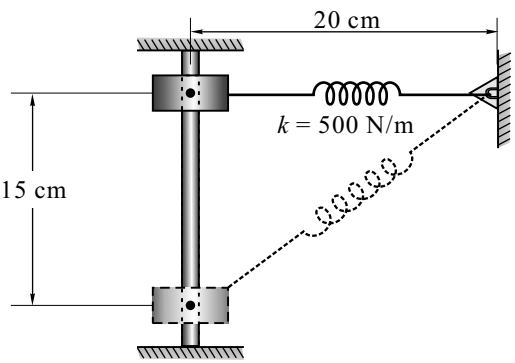

Fig. 14.E6

7. A 10 kg collar slides without friction along a vertical road as shown in Fig. 14.E7. The spring attached to the collar has an undeformed length of 100 mm and a constant of 500 N/m. If the collar is released from rest in position ①, determine its velocity after it has moved 150 mm to position ②.

[***Ans.*** v = 1.54 m/s]

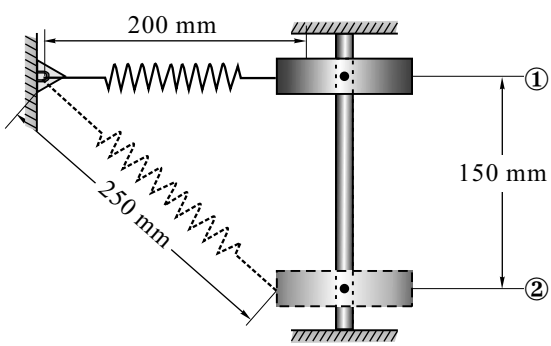

Fig. 14.E7

8. The collar has a mass of 20 kg and slides along the smooth rod. Two springs are attached to it and the ends of the rod as shown in Fig. 14.E8. If each spring has an uncompressed length of 1 m and the collar has a speed of 2 m/s when s = 0, determine the maximum compression of each spring due to the back-and-forth (oscillating) motion of the collar.

[***Ans.*** s = 0.73 m]

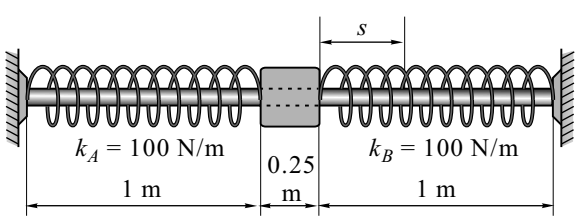

Fig. 14.E8

9. The 7 kg collar slides freely on the fixed vertical rod and is given an upward velocity v_0 = 2.5 in the position shown in Fig. 14.E9. The collar compresses the upper spring and is then projected downward. Calculate the maximum resisting deformation of the lower spring.

[***Ans.*** 100.6 mm]

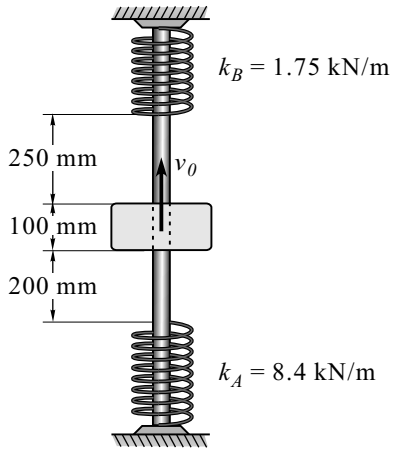

Fig. 14.E9

10. The steel ingot has a mass of 1800 kg. It travels along the conveyor at a speed v = 0.5 m/s when it collides with the "nested" spring assembly shown in Fig. 14.E32. If the stiffness of the outer spring is k_A = 5 kN/m, determine the required stiffness k_B of the inner spring so that the motion of the ingot is stopped at the moment the front, C, of the ingot is 0.3 m from the wall.

[***Ans.*** 11.1 kN/m]

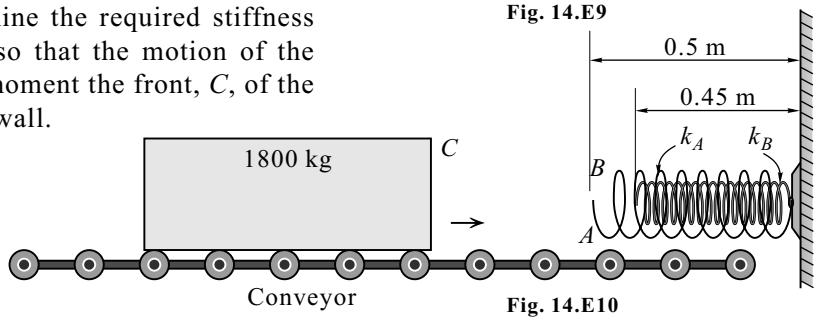

Fig. 14.E10

11. A spring is used to stop a 60 kg package, which is sliding on a horizontal surface. The spring has a constant k = 20 kN/m and is held by cables so that it is initially compressed 120 mm. Knowing that the package has a velocity of 2.5 m/s in position shown and that the maximum additional deflection of the spring is 40 mm. Determine **(a)** the coefficient of kinetic friction between the package and the surface, and **(b)** the velocity of the package as it passes again through the position shown in Fig. 14.E11.

[***Ans.*** 0.2, 1.105 m/s]

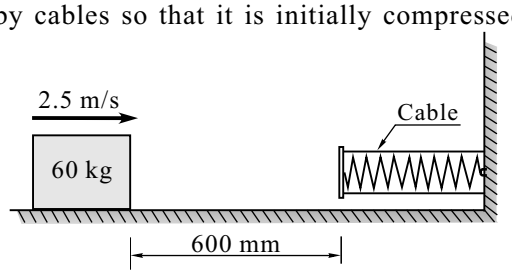

Fig. 14.E11

12. The spring bumper is used to arrest the motion of the 20 N block, which is sliding toward it at v = 2.7 m/s. As shown in Fig. 14.E12 the spring is confined by the plate P and wall using cables so that its length is 0.45 m. If the stiffness of the spring is k = 800 N/m, determine the required unstretched length of the spring so that the plate is not displaced more than 0.06 m after the block collides into it. Neglect friction, the mass of the plate and spring, and the energy loss between the plate and block during the collision.

[***Ans.*** 0.58 m]

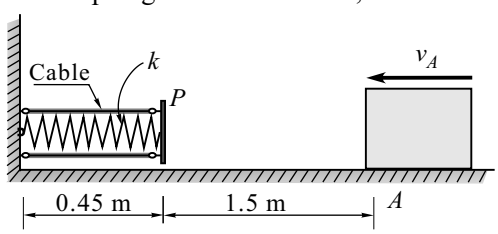

Fig. 14.E12

13. A 10 kg block rests on the horizontal surface shown in Fig. 14.E13. The spring, which is not attached to the block, has a stiffness k = 500 N/m and is initially compressed 0.2 m from C to A. After the block is released from rest at A, determine its velocity when it passes point D. The coefficient of kinetic friction between the block and the plane is $\mu_k = 0.2$

[***Ans.*** 0.656 m/s]

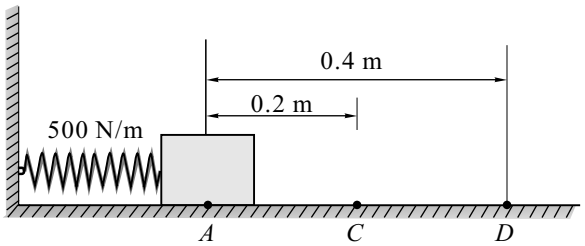

Fig. 14.E13

14. Figure 14.E14 shows a wagon weighing 500 kN starts from rest, runs 30 m down one per cent grade and strikes the bumper post. If the rolling resistance of the track is 5 N/km. Find the velocity of the wagon when it strikes the post.

If the bumper spring which compresses 1 mm for every 15 kN, determine by how much this spring will be compressed.

[***Ans.*** 1.716 m/s; 100.2 mm]

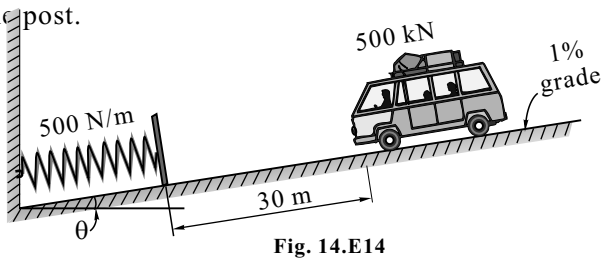

Fig. 14.E14

15. In Fig. 14.E15, the block P of 50 N weight is pulled so that the extension in the spring is 10 cm. The stiffness of the spring is 4 N/cm and the coefficient of friction between the block and the plane O-X is $\mu = 0.3$.

Find the **(a)** velocity of the block as the spring returns to its undeformed state, and **(b)** maximum compression in the spring.

[***Ans.*** v = 0.443 m/s and x = 2.5 cm]

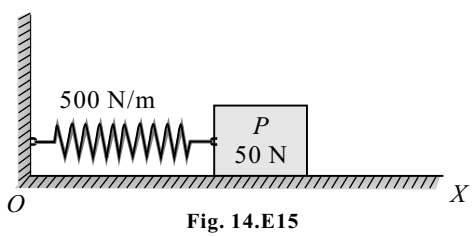

Fig. 14.E15

16. Figure 14.E16 shows a collar A having mass of 5 kg that can slide without friction on a pipe. If it is released from rest at the position shown where the spring is unstretched, what speed will the collar have after moving 50 mm? Take spring constant as 2000 N/m.

[***Ans.*** 0.5 m/s]

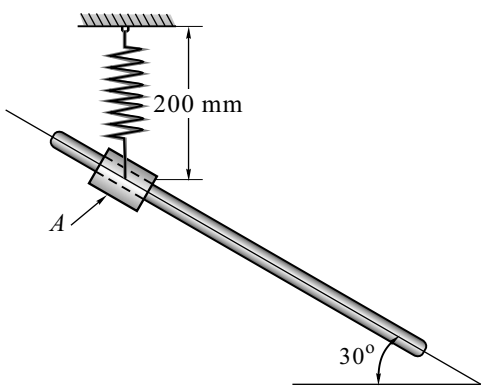

Fig. 14.E16

17. The 25 N cylinder is falling A with a speed v_A = 3 m/s on to the platform as shown in Fig. 14.E17. Determine the maximum displacement of the platform, caused by the collision. The spring has an unstretched length of 0.53 m and is originally kept in compression by the 0.3 m long cables attached to the platform. Neglect the mass of the platform and spring and any energy lost during the collision.

[***Ans.*** 0.022 m]

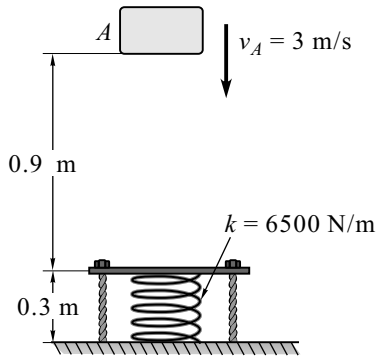

Fig. 14.E17

18. The platform P, shown in Fig. 14.E18 has negligible mass and it tied down so that the 0.4 m long cords keep the spring compressed 0.6 m when nothing is on the platform. If a 2 kg block is placed on the platform and released from rest after the platform is pushed down 0.1 m, determine the maximum height 'h' the block rises in the air, measured from the ground.

[***Ans.*** 0.963 m]

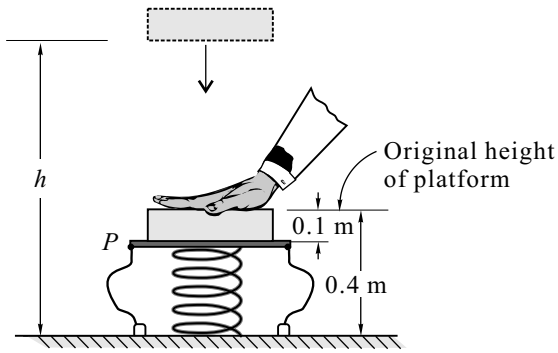

Fig. 14.E18

19. The 30 N ball is fired from a tube by a spring having a stiffness K = 4000 N/m as shown in Fig. 14.E19. Determine how far the spring must be compressed to fire the ball from the compressed position to a height of 2.4 m, at which point it has a velocity of 1.8 m/s.

[***Ans.*** 0.196 m]

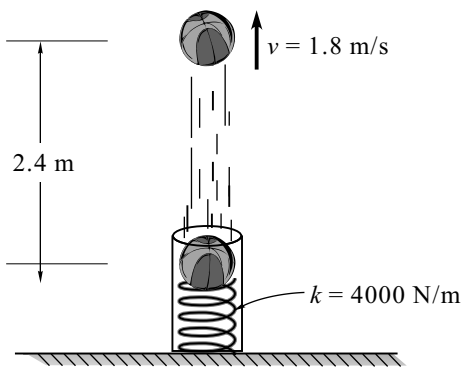

Fig. 14.E19

20. If a mass 'm' hangs freely stretches the spring a distance 'C' m as shown in Fig. 14.E20. Show that if the mass is suddenly released the spring stretches a distance '$2C$' before mass starts to return upward (To show $S = 2C$).

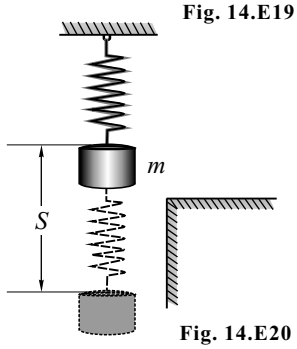

Fig. 14.E20

21. Four inelastic cables C are attached to a plate P and hold the 0.3 m long spring 0.075 m in compression when no weight is on the plate as shown in Fig. 14.E21. There is also an undeformed spring nested within this compressed spring. Determine the speed v of the 50 N block when it is 0.6 m above the plate, so that after it strikes the plate, it compress the nested spring, having a stiffness of 10 N/mm, by an amount of 0.06 m. Neglect the mass of the plate and spring and any energy lost in the collision.

[***Ans.*** 0.022 m]

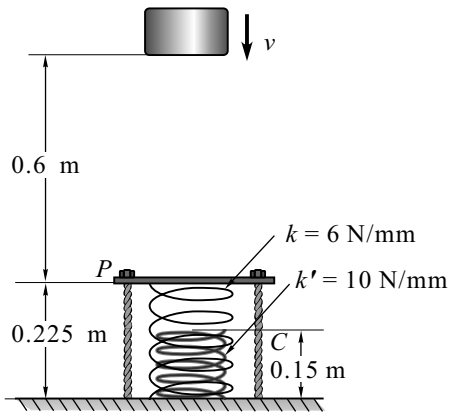

Fig. 14.E21

22. In the design of a conveyor belt system, small metal blocks are discharged with a velocity of 0.4 m/s onto a ramp by the upper conveyor belt shown in Fig. 14.E22. If the kinetic coefficient of friction between the blocks and the ramp is 0.3, calculate the angle which the ramp must make with the horizontal so that the blocks will transfer without slipping to the lower conveyor belt moving at the speed of 0.14 m/s.

[***Ans.*** $\theta = 16.62^{\circ}$]

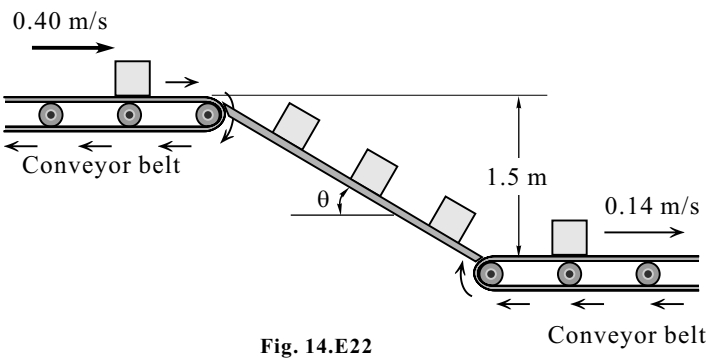

Fig. 14.E22

23. A 4 kg collar attached to a spring, slides on a smooth bent rod $ABCD$ as shown in Fig. 14.E23. The spring has constant k = 500 N/m and is undeformed when the collar is at 'C'. If the collar is released from rest at 'A' determine the velocity of collar, when it passes through 'B' and 'C'. Also find the distance moved by collar beyond 'C' before to rest again.

[***Ans.*** v_B = 5.975 m/s,
v_C = 6.408 m/s and
CD = 0.95 m]

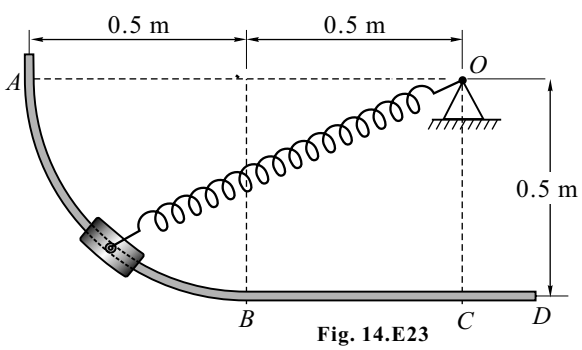

Fig. 14.E23

24. A 3 kg collar is attached to a spring and slides without friction in a vertical plane along the curved rod *ABC* as shown in Fig. 14.E24. The spring is undeformed when collar is at *C* and its constant is 600 N/m. If the collar is released at *A* with no initial velocity, determine the velocity **(a)** as it passes through *B*, and **(b)** as it releases *C*.

[***Ans.*** **(a)** $v_B = 2.33$ m/s **(b)** $v_C = 1.23$ m/s]

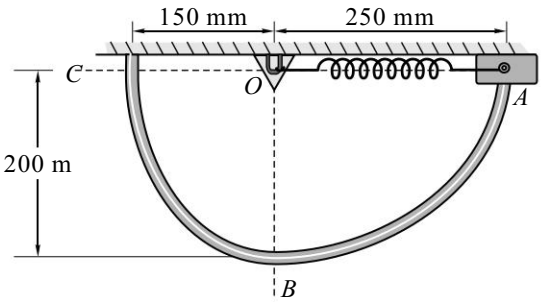

Fig. 14.E24

25. A 1.5 kg collar is attached to a spring and slides without friction along a circular rod in a horizontal plane as shown in Fig. 14.E25. The spring has an undeformed length of 150 mm and a constant k = 400 N/m. Knowing that the collar is in equilibrium at *A* and is given a slight push to get it moving, determine the velocity of the collar **(a)** as it passes through *B*, and **(b)** as it passes through *C*.

[***Ans.*** **(a)** $v_B = 3.46$ m/s **(b)** $v_C = 4.47$ m/s]

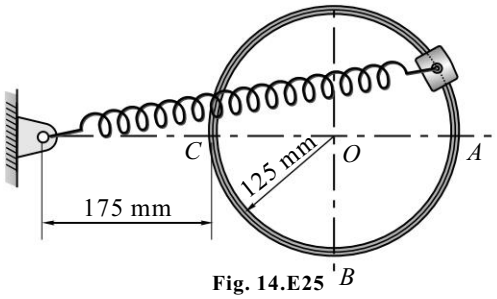

Fig. 14.E25

26. A 7 kg collar *A* slides with negligible friction on the fixed vertical shaft as shown in Fig. 14.E14. When the collar is released from rest at the bottom position shown, it moves up the shaft under the action of constant force F = 200 N applied to the cable. Calculate the stiffness k, which the spring must have if its maximum compression is to be limited to 75 mm. The position of the small pulley at *B* is fixed.

[***Ans.*** $k = 8.79$ kN/m]

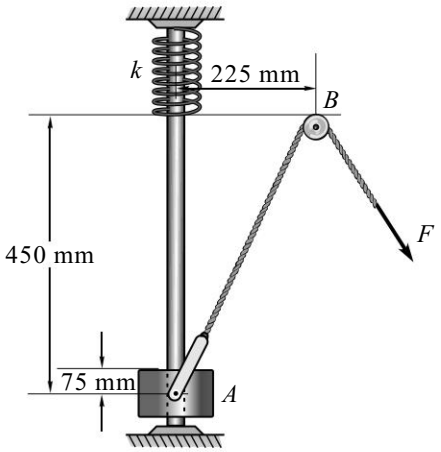

Fig. 14.E26

27. The 15 kg collar *A* is released from rest in the position shown in Fig. 14.E27 and slides with negligible friction up the fixed rod inclined 30° from the horizontal under the action of a constant force P = 200 N applied to the cable. Calculate the required stiffness k of the spring so that its maximum deflection equals 180 mm. The position of the small pulley at *B* is fixed.

[***Ans.*** $k = 1957$ kN/m]

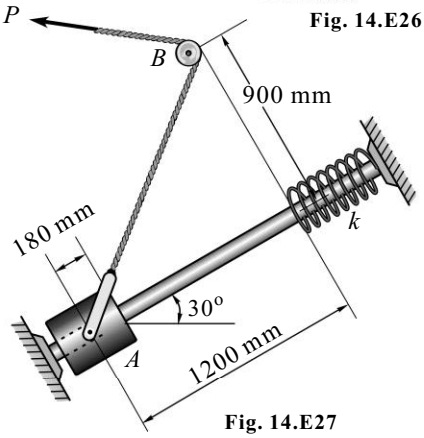

Fig. 14.E27

28. Figure 14.E28 shows marbles having a 5 gm mass fall from rest at *A* through frictionless glass tube and accumulate in can *C*. Determine the placement of can *C* from the end of the tube and the speed at which the marbles fall into the can. Neglect the size of can and rotational effect of marbles in the glass tube. Marbles leave the tube at *B* horizontally.

[***Ans.*** $R = 2.83$ m, 7.67 m/s at 54.7° with horizontal]

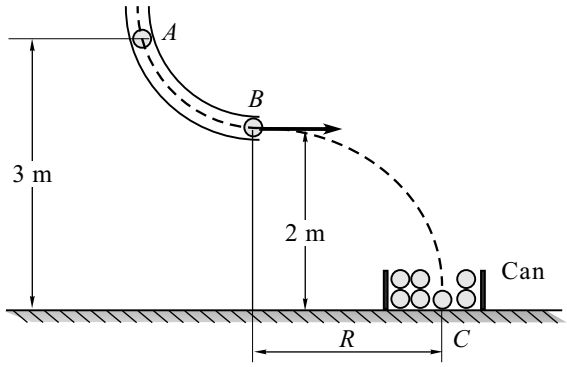

Fig. 14.E28

29. A ball of 1 kg mass starts from the position as shown in Fig. 14.E29 and slides down a frictionless tube under its own weight. After leaving the tube where will the ball hit the wall? Also calculate the time interval between the instant of leaving the tube and hitting the wall.

[***Ans.*** 0.17 m above the outlet of tube and 0.925 s]

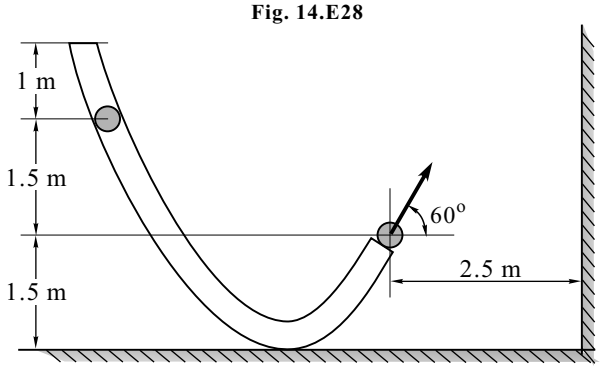

Fig. 14.E29

30. A man at the window *A* wishes to throw the 30 kg sack on the ground as shown in Fig. 14.E30. To do this he allows it to swing from rest at *B* to point *C*. When he releases the cord at 30°, determine the speed at which is strikes the ground and the distance *R*.

[***Ans.*** $R = 32$ m and $v = 17.72$ m/s $\left(\searrow 55.3^\circ\right)$]

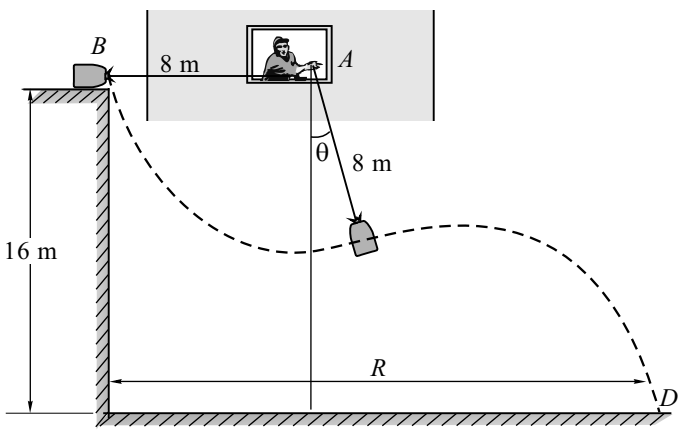

Fig. 14.E30

31. A spring compressed 75 mm and with a modulus $k = 5$ N/mm is used to propel the 50 g mass in the frictionless tube shown in Fig. 14.E31. Determine the horizontal distance '*R*' at which the mass will be at the same height as initially. Neglect air resistance.

[***Ans.*** $R = 55.4$ m]

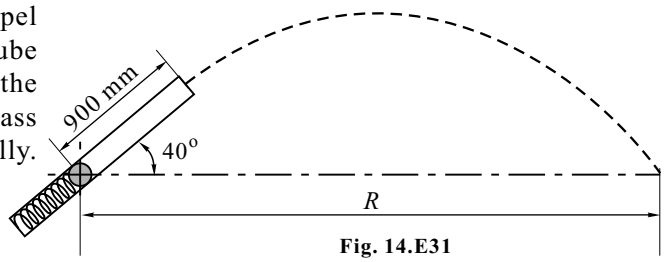

Fig. 14.E31

32. A hammer weighing 30 N starts sliding from rest from point A down a sloping roof which has a coefficient of friction $\mu = 0.18$. Find the distance x of the point G where the hammer hits the ground as shown in Fig. 14.E32.

[***Ans.*** $x = 5.34$ m]

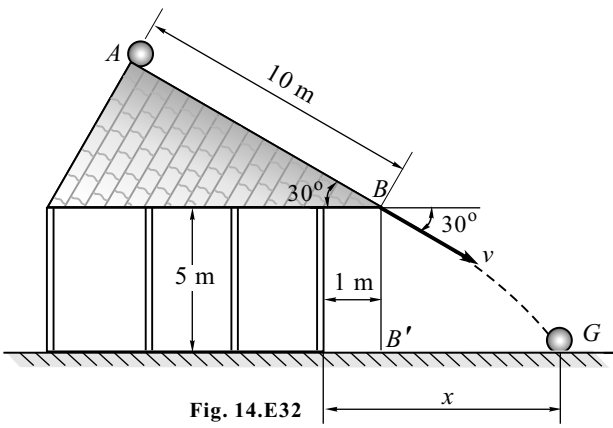

Fig. 14.E32

33. The 25 N collar is released from rest at A travels along the smooth guide as shown in Fig. 14.E33. Determine its speed when its center reaches point C and the normal force it exerts on the rod at this point. The spring has an unstretched length of 300 mm, and point C is located just before the end of the curved portion of the rod.

[***Ans.*** 3.8 m/s and 94.6 N]

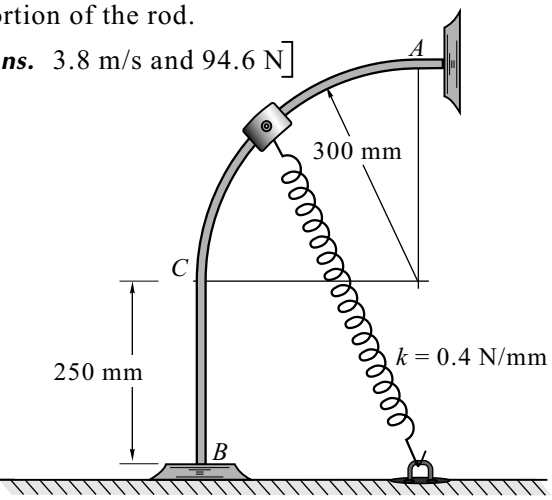

Fig. 14.E33

34. A package having a mass of 2 kg is delivered from a conveyor to a smooth circular ramp with a velocity of 1 m/s as shown in Fig. 14.E34. If the radius of the ramp is 0.5 m, determine the angle at which each package begins to leave the surface.

[***Ans.*** $x = 5.34$ m]

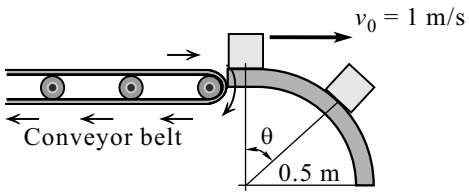

Fig. 14.E34

35. A 1000 kg car starts from rest at point ① and moves without friction down the track shown in Fig. 14.E35. Determine **(a)** the force exerted by the track on the car at point ② where radius of curvature of track is 6 m, and **(b)** the minimum safe value of the radius of curvature at point ③.

[***Ans.*** **(a)** 49.05 kN
(b) 15 m]

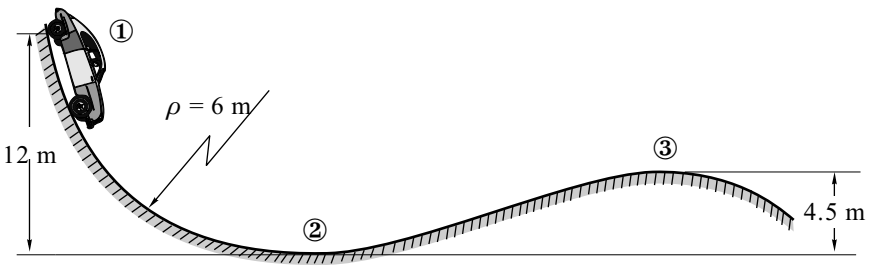

Fig. 14.E35

[II] Review Questions

1. Explain the following:

(a) Work done by a force
(b) Work done by a weight force
(c) Work done by a frictional force
(d) Work done by a spring force

2. State and prove work - energy principle.

3. State the principle of conservation of energy.

4. Explain the term power.

[III] Fill in the Blanks

1. Work done by a force is _____ if the direction of force and the direction of displacement both are in opposite direction.

2. Work is a _____ quantity.

3. Work done by frictional force is always _____.

4. The energy possessed by a particle by virtue of its motion is called as _____.

5. Work done by weight force will be _____ if moved from lower position to upper position.

[IV] Multiple-choice Questions

Select the appropriate answer from the given options.

1. Work done by normal reaction and component of weight force perpendicular to inclined plane is _____.

(a) positive **(b)** negative **(c)** zero **(d)** none of these

2. The energy possessed by a particle by virtue of its position is called as _____.

(a) potential energy **(b)** kinetic energy **(c)** strain energy **(d)** heat energy

3. Frictional force in a system is considered as _____ force.

(a) conservative **(b)** non-conservative **(c)** neutral **(d)** virtual

4. Work done by the forces in a system may be _____.

(a) positive **(b)** negative **(c)** zero **(d)** any one of these

CHAPTER

15

KINETICS OF PARTICLES - III

IMPULSE - MOMENTUM PRINCIPLE AND IMPACT

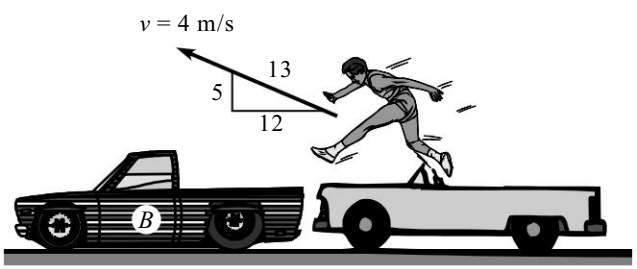

Learning Objectives

After reading this chapter, you will be able to answer the following questions:

- *What are the meanings of line of impact, direct impact, oblique impact, central impact and eccentric impact?*
- *What is meant by impulse momentum principle?*
- *How can you use F-t diagram?*
- *What is coefficient of restitution?*
- *What are the various types of impact?*
- *How can you determine loss of kinetic energy?*

15.1 INTRODUCTION

In the first part of kinetics, we had used the terms *force*, *mass* and *acceleration* to solve the problem by *Newton's Second Law* whereas in the second part of kinetics, we have used the term *force*, *velocity* and *displacement* to solve the problem by *Work - Energy Principle*. In this chapter, we are going to use the term *force*, *time* and *velocity* to solve the problem by *Impulse - Momentum Principle*.

15.2 PRINCIPLE OF IMPULSE AND MOMENTUM

Let F be the force acting on a particle having mass m and producing an acceleration a.

By Newton's second law of motion, we have

$$F = ma$$

$$F = m\frac{dv}{dt} \qquad \left(\because a = \frac{dv}{dt}\right)$$

$$F\,dt = m\,dv$$

Integrating both sides,

$$\therefore \int_{t_1}^{t_2} F\,dt = \int_{v_1}^{v_2} m\,dv$$

$$\therefore \int_{t_1}^{t_2} F\,dt = mv_2 - mv_1$$

The term $\int_{t_1}^{t_2} F\,dt$ is called *impulse* and its unit is N.s.

The term Mass × Velocity is called *momentum*.

So, we have

$$\text{Impulse} = \text{Final momentum} - \text{Initial momentum}$$

Since the velocity is a vector quantity, impulse is also a vector quantity.

1. Impulse of Force

When a large force acts over a small finite period the force is called as an *impulse force*.

Impulse of force F acting over a time interval from t_1 to t_2 is defined as

$$I = \int_{t_1}^{t_2} F\,dt$$

Points to be considered

1. When impulse force acts on the system, non-impulsive force such as weight of the bodies is neglected.
2. When the impulsive forces acts for very small time, impulse due to external forces is zero.
3. The internal forces between the particles need not be considered as the sum of impulses or internal forces are zero.

2. In Component Form

$$\int_{t_1}^{t_2} F_x \, dt = mv_{x_2} - mv_{x_1}$$

and $$\int_{t_1}^{t_2} F_y \, dt = mv_{y_2} - mv_{y_1}$$

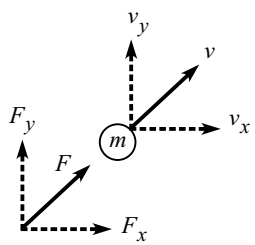

Fig. 15.2-i

The component of the resultant linear impulse along any direction is equal to change in the component of momentum in that direction.

15.3 PRINCIPLE OF CONSERVATION MOMENTUM

In a system, if the resultant force is zero, the impulse momentum equation reduces to final momentum equal to initial momentum. Such a situation arises in many cases because the force system consists of only action and reaction on the elements of the system. The resultant force is zero, only when entire system is considered, but not when the free body of each element of the system is considered.

If a man jumps off a boat, the action of the man is equal and opposite to the reaction of the boat. Hence, the resultant is zero in the system.

Initial momentum = Final momentum

Similar equation holds good when we consider the system of a gun and shell.

15.4 IMPACT

Phenomenon of collision of two bodies, which occurs for a very small interval of time and during which two bodies exert very large force on each other, is called an *impact*.

1. Line of Impact

The common normal to the surfaces of two bodies in contact during the impact is called *line of impact*. Line of impact is perpendicular to common tangent.

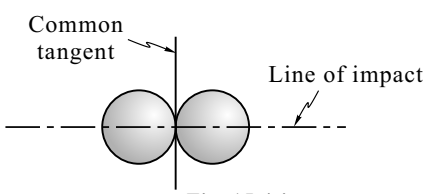

Fig. 15.4-i

2. Central Impact

When the mass centres C_1 and C_2 of the colliding bodies lie on the line of impact, it is called *central impact*.

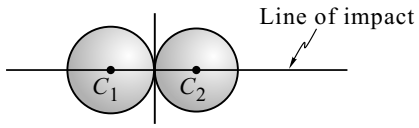

Fig. 15.4-ii

3. Non-Central Impact

When the mass centres C_1 and C_2 of the colliding bodies do not lie on the line of impact, it is called *non-central* or *eccentric impact*.

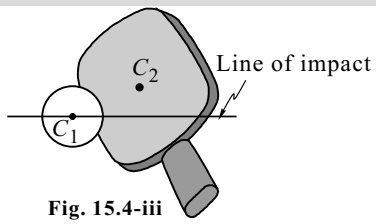

Fig. 15.4-iii

4. Direct Central Impact

When the direction of motion of the mass centers of two colliding bodies is along the line of impact then we say it is *direct central impact*. Here the velocities of two bodies collision are collinear with the line of impact.

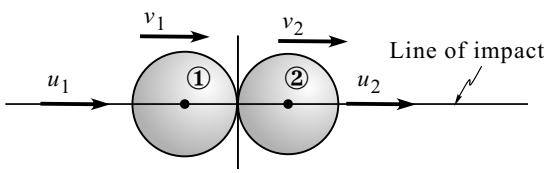

Fig. 15.4-iv

u_1 = Velocity of body ① before collision

u_2 = Velocity of body ② before collision

v_1 = Velocity of body ① after collision

v_2 = Velocity of body ② after collision

m_1 = Mass of body ①

m_2 = Mass of body ②

(a) Total momentum of system is conserved along the line of impact.

$$m_1u_1 + m_2u_2 = m_1v_1 + m_2v_2$$

(b) Coefficient of restitution relation

$$e = -\left[\frac{v_2 - v_1}{u_2 - u_1}\right]$$

5. Oblique Central Impact

When the direction of motion of the mass centers of one or two colliding bodies is not along the line of impact (i.e., at same angle with the line of impact) then we say it is *oblique central impact*. Here the velocities of two colliding bodies are not collinear with the line of impact.

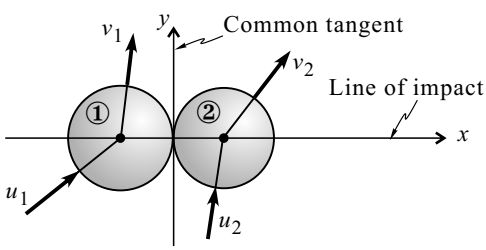

Fig. 15.4-v

(a) The component of the total momentum of the two bodies along the line of impact is conserved.

$$m_1u_{1x} + m_2u_{2x} = m_1v_{1x} + m_2v_{2x}$$

(b) Coefficient of restitution relation along the line of impact is

$$e = -\left[\frac{v_{2x} - v_{1x}}{u_{2x} - u_{1x}}\right]$$

(c) Component of the momentum along the common tangent is conserved which means the component of the velocities along the common tangent remains unchanged.

$$m_1 u_{1y} = m_1 v_{1y} \qquad \therefore \; u_{1y} = v_{1y}$$
$$m_2 u_{2y} = m_2 v_{2y} \qquad \therefore \; u_{2y} = v_{2y}$$

Note : Here the x-axis is line of impact which can be treated as normal (n) and y-axis is the common tangent which can be treated as tangent (t).

15.5 COEFFICIENT OF RESTITUTION (e)

When two bodies collides for a very small interval of time, there will be phenomena of *Deformation* and *Restitution* (*Regain*) of shape.

By impulse - momentum principle for the process of deformation of the colliding body of mass m_1, we have

$$m_1 u_1 - \int F_D \, dt = m_1 u \qquad \text{... (15.1)}$$

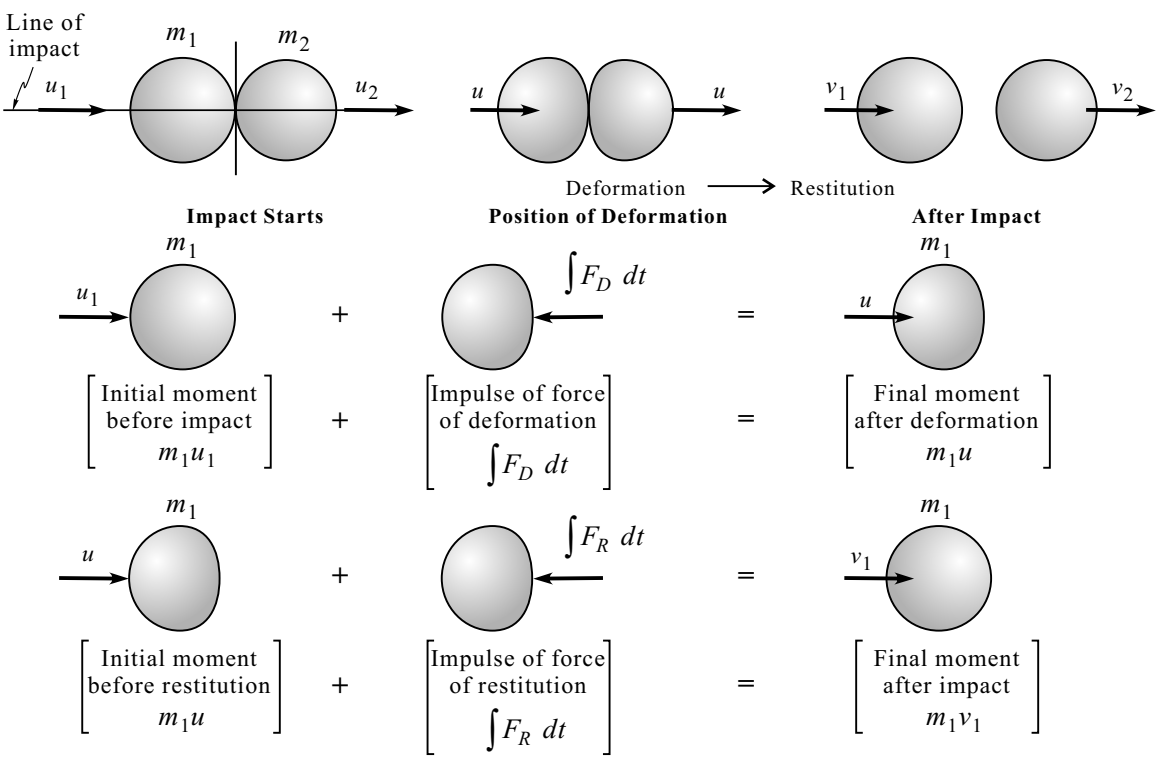

Fig. 15.5-i

Similarly, by impulse - momentum principle for the process of restitution of body of mass m_1, we have

$$m_1 u - \int F_R \, dt = m_1 v_1 \qquad \text{... (15.2)}$$

From Eqs. (15.1) and (15.2), we have

$$\int F_D \, dt = m_1 u_1 - m_1 u \quad \text{and} \quad \int F_R \, dt = m_1 u - m_1 v_1$$

$$\therefore \quad \frac{\int F_R\, dt}{\int F_D\, dt} = \frac{m_1(u - v_1)}{m_1(u_1 - u)} = \frac{u - v_1}{u_1 - u} = e \qquad \text{... (15.3)}$$

Similarly, by impulse - momentum principle for the process of deformation and restitution, we have

$$\frac{\int F_R\, dt}{\int F_D\, dt} = \frac{v_2 - u}{u - u_2} \qquad \text{... (15.4)}$$

From Eqs. (15.3) and (15.4), we get

$$\left[\frac{u - v_1 + v_2 - u}{u_1 - u + u - u_2}\right] = e$$

$$v_2 - v_1 = e(u_1 - u_2)$$

$$e = \frac{v_2 - v_1}{u_1 - u_2} = \frac{\text{Velocity of separation}}{\text{Velocity of approach}}$$

$$\therefore \quad e = -\left[\frac{v_2 - v_1}{u_2 - u_1}\right]$$

15.5.1 Classification of Impact Based on Coefficient of Restitution

1. Perfectly Elastic Impact

(a) Coefficient of restitution $e = 1$.

(b) Momentum is conserved along the line of impact

$$m_1u_1 + m_2u_2 = m_1v_1 + m_2v_2$$

(c) K.E. is conserved (No loss of K.E.)

$\therefore$ Total K.E. before impact = Total K.E. after impact

$$\frac{1}{2} m_1u_1^2 + \frac{1}{2} m_2u_2^2 = \frac{1}{2} m_1v_1^2 + \frac{1}{2} m_2v_2^2$$

2. Perfectly Plastic Impact

(a) Coefficient of restitution $e = 0$.

(b) After impact, both the bodies collides and move together.

(c) Momentum is conserved

$$m_1u_1 + m_2u_2 = (m_1 + m_2)v$$

where v is the common velocity after impact.

(d) There is loss of K.E. during impact. Thus, K.E. is not conserved.

Loss of K.E. = Total K.E. before impact – Total K.E. after impact

$$\text{Loss of K.E.} = \left(\frac{1}{2} m_1u_1^2 + \frac{1}{2} m_2u_2^2\right) - \left(\frac{1}{2} m_1v_1^2 + \frac{1}{2} m_2v_2^2\right)$$

3. Semi-elastic Impact

Coefficient of restitution $(0 < e < 1)$

Solved Problems Based on Impact

Problem 1

Two particles of 10 kg and 20 kg masses are moving along a straight line towards each other at velocities of 4 m/s and 1 m/s respectively as shown in Fig.15.1. If e = 0.6, determine the velocities of the particles immediately after their collision. Also find the loss of kinetic energy.

Solution

(i) By law of conservation of momentum, we have

$$m_1u_1 + m_2u_2 = m_1v_1 + m_2v_2$$

$$10 \times 4 + 20 \times (-1) = 10v_1 + 20v_2$$

$$20 = 10v_1 + 20v_2$$

$$v_1 + 2v_2 = 2 \qquad \text{... (I)}$$

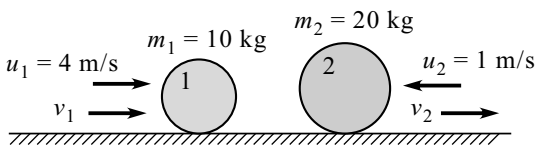

(v_1 and v_2 are the assumed directions toward right after impact)

Fig. 15.1

(ii) By coefficient of restitution, we have

$$e = -\left[\frac{v_2 - v_1}{u_2 - u_1}\right]$$

$$0.6 = -\left[\frac{v_2 - v_1}{-1 - 4}\right]$$

$$v_2 - v_1 = 3 \qquad \text{... (II)}$$

Solving Eqs. (I) and (II), we get

v_2 = 1.667 m/s (→)

v_1 = –1.333 m/s

∴ v_1 = 1.333 m/s (←)

(iii) Loss of K.E. = Initial K.E. – Final K.E.

$$\text{Loss of K.E.} = \left(\frac{1}{2}m_1u_1^2 + \frac{1}{2}m_2u_2^2\right) - \left(\frac{1}{2}m_1v_1^2 + \frac{1}{2}m_2v_2^2\right)$$

$$\text{Loss of K.E.} = \left[\frac{1}{2} \times 10 \times 4^2 + \frac{1}{2} \times 20 \times (-1)^2\right] - \left[\frac{1}{2} \times 10 \times (-1.333)^2 + \frac{1}{2} \times 20 \times 1.667^2\right]$$

$$\text{Loss of K.E.} = 90 - 36.67$$

$$= 53.33 \text{ J}$$

$$\%\text{ loss in K.E.} = \frac{\text{Loss in K.E.}}{\text{Initial K.E.}} \times 100$$

$$= \frac{53.33}{90} \times 100$$

∴ % loss in K.E. = 59.27 %

Problem 2

Three perfectly elastic balls A, B and C having mass 2 kg, 4 kg and 8 kg respectively move along a line with velocities 4 m/s, 1 m/s and 0.75 m/s respectively as shown in Fig.15.2. If the ball A strikes ball B which in turn strikes C, determine the velocities of the three balls after impact.

Solution

Consider a collision between two balls *A* and *B*

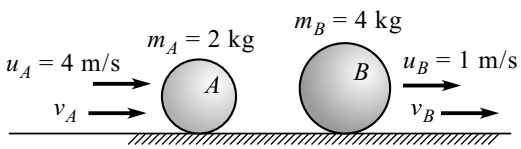

Fig. 15.2(a)

(i) By law of conservation of momentum, we have

$$m_A u_A + m_B u_B = m_A v_A + m_B v_B$$

$$2 \times 4 + 4 \times 1 = 2v_A + 4v_B$$

$$v_A + 2v_B = 6 \qquad \text{... (I)}$$

(ii) By coefficient of restitution, we have

$$e = -\left[\frac{v_B - v_A}{u_B - u_A}\right]$$

$$1 = -\left[\frac{v_B - v_A}{0.75 - 3}\right]$$

$$v_B - v_A = 3 \qquad \text{... (II)}$$

Solving Eqs. (I) and (II), we get

$v_B = 3$ m/s (→) and $v_A = 0$ (Ball A comes to rest)

Consider a collision between two balls *B* and *C*

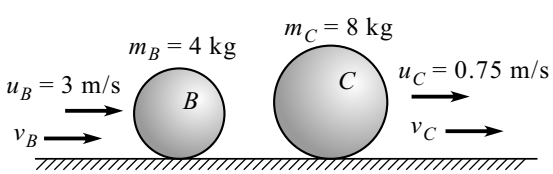

Fig. 15.2(b)

(i) By law of conservation of momentum, we have

$$m_B u_B + m_C u_C = m_B v_B + m_C v_C$$

$$4 \times 3 + 8 \times 0.75 = 4v_B + 8v_C$$

$$18 = 4v_B + 8v_C$$

$$2v_B + 4v_C = 9 \qquad \text{... (III)}$$

(ii) By coefficient of restitution, we have

$$e = -\left[\frac{v_C - v_B}{u_C - u_B}\right]$$

$$1 = -\left[\frac{v_C - v_B}{0.75 - 3}\right]$$

$$v_C - v_B = 2.25 \qquad \text{... (IV)}$$

Solving Eqs. (III) and (IV), we get

$v_C = 2.25$ m/s (→) and $v_B = 0$ (Ball B comes to rest)

Problem 3

Two small discs of 25 g and 5 g masses are kept on a horizontal surface as shown in Fig.15.3. Second disc is struck by the first disc and produces direct central impact. After impact each disc slides and comes to rest. The first slides 95 mm to the right and the second slides 480 mm to the right before coming to rest. Determine the value of coefficient of restitution. Assume common coefficient of friction for both discs.

Solution

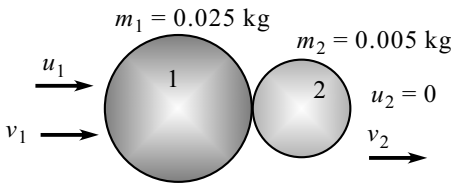

Fig. 15.3

(i) By law of conservation of momentum, we have

$$m_1u_1 + m_2u_2 = m_1v_1 + m_2v_2$$

$$0.025 \times u_1 + 0.005 \times 0 = 0.025 \times v_1 + 0.005 \times v_2$$

$$5v_1 + v_2 = 5u_1 \qquad \text{... (I)}$$

Kinetic energy of each disc after impact is lost in doing work against friction.

(ii) By work - energy principle, we have

Work done = Change in K.E.

$$-\mu(0.025 \times 9.81)95 = 0 - \frac{1}{2} \times 0.025 \times v_1^2 \qquad \text{... (II)}$$

$$-\mu(0.005 \times 9.81)480 = 0 - \frac{1}{2} \times 0.005 \times v_2^2 \qquad \text{... (III)}$$

Taking the ratio of Eqs. (II) and (III), we get

$$\frac{95}{480} = -\frac{0.025 \times v_1^2}{0.005 \times v_2^2}$$

$$\therefore \frac{v_1}{v_2} = 0.445$$

$$v_1 = 0.445v_2$$

Substituting in Eq. (I), we get

$$5 \times 0.445v_2 + v_2 = 5u_1$$

$$v_2 = 1.55u_1 \text{ and } v_1 = 0.69u_1$$

(iii) Coefficient of restitution gives

$$e = -\left[\frac{v_2 - v_1}{u_2 - u_1}\right]$$

$$= -\left[\frac{1.55u_1 - 0.69u_1}{0 - u_1}\right]$$

$$e = 0.86$$

Problem 4

Two balls having 20 kg and 30 kg masses are moving towards each other with velocities of 10 m/s and 5 m/s respectively as shown in Fig.15.4. If after impact the ball having 30 kg mass is moving with 6 m/s velocity to the right then determine the coefficient of restitution between the two balls.

Solution

(i) By law of conservation of momentum, we have

$$m_1u_1 + m_2u_2 = m_1v_1 + m_2v_2$$

$$20 \times 10 + 30 \times (-5) = 20v_1 + 30 \times 6$$

$$v_1 = -6.5 \text{ m/s}$$

$$\therefore \; v_1 = 6.5 \text{ m/s } (\leftarrow)$$

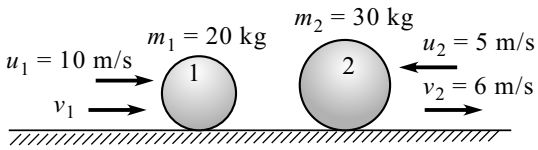

Fig. 15.4

(ii) For coefficient of restitution, we have the relation

$$e = -\left[\frac{v_2 - v_1}{u_2 - u_1}\right]$$

$$e = -\left[\frac{6 - (-6.5)}{-5 - 10}\right]$$

$$e = 0.8333$$

Problem 5

A series of 'n' identical balls is shown on a smooth horizontal surface in Fig.15.5. If number '1' ball moves horizontally with a velocity 'u' and collides with ball number '2' which in turn collides with ball '3', and so on, and if the coefficient of restitution for each impact is 'e', show that the velocity of the nth ball is given by

$$v_n = \frac{(1+e)^{n-1}\,u}{2^{n-1}}$$

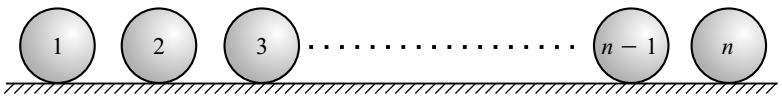

Fig. 15.5(a)

Solution

(i) Consider the collision between balls 1 and 2.

By law of conservation of momentum, we have

$$m_1u_1 + m_2u_2 = m_1v_1 + m_2v_2$$

$$u_1 + u_2 = v_1 + v_2$$

$$u + 0 = v_1 + v_2$$

$$\therefore \; v_1 + v_2 = u \qquad \text{... (I)}$$

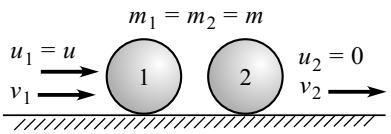

Fig. 15.5(b)

By coefficient of restitution, we have

$$e = -\left[\frac{v_2 - v_1}{u_2 - u_1}\right]$$

$$e = -\left[\frac{v_2 - v_1}{0 - u}\right]$$

$$v_2 - v_1 = eu \qquad \text{... (II)}$$

Solving Eqs. (I) and (II), we get

$$v_2 = \frac{u(1+e)}{2}$$

(ii) Consider the collision between balls 2 and 3.

We have

$$u_2 = \frac{u(1+e)}{2} \quad \text{and} \quad u_3 = 0$$

By law of conservation of momentum, we have

$$m_2u_2 + m_3u_3 = m_2v_2 + m_3v_3$$

$$u_2 + u_3 = v_2 + v_3$$

$$\frac{u(1+e)}{2} + 0 = v_2 + v_3$$

$$v_2 + v_3 = \frac{u(1+e)}{2} \qquad \text{... (III)}$$

Coefficient of restitution gives

$$e = -\left[\frac{v_3 - v_2}{u_3 - u_2}\right]$$

$$e = -\left[\frac{v_3 - v_2}{0 - \dfrac{u(1+e)}{2}}\right]$$

$$v_3 - v_2 = \frac{eu(1+e)}{2} \qquad \text{... (IV)}$$

Solving Eqs. (I) and (II), we get

$$2v_3 = \frac{u(1+e)}{2} + \frac{eu(1+e)}{2} = \frac{u(1+e)(1+e)}{2} = \frac{u(1+e)^2}{2}$$

$$v_3 = \frac{u(1+e)^2}{2^2}$$

(iii) Similarly, considering the collision between balls 3 and 4,

$$v_4 = \frac{u(1+e)^3}{2^3} \quad \text{and so on .....}$$

(iv) $\therefore$ velocity of nth ball when it gets hit by the $(n-1)$th ball

$$v_n = \frac{u(1+e)^{n-1}}{2^{n-1}}$$

Problem 6

A 50 g ball is dropped from a height of 600 mm on a small plate as shown in Fig.15.6(a). It rebounds to a height of 400 mm when the plate directly rests on the ground and to a height of 250 mm when a foam rubber mat is placed between the plate and the ground. Determine **(i)** the coefficient of restitution between the plate and the ground, and **(ii)** the mass of the plate.

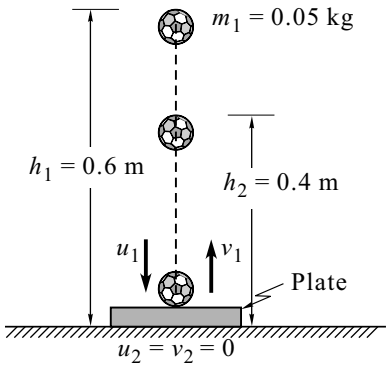

(velocity of plate before and after impact will be zero)

Fig. 15.6(a)

Solution

(i) The plate is kept directly on the ground

$u_1 = \sqrt{2gh_1}$ (↓) (velocity before impact)

$u_1 = \sqrt{2 \times 9.81 \times 0.6}$

$u_1 = 3.43$ m/s (↓)

$v_1 = \sqrt{2gh_2}$ (↑) (velocity after impact)

$v_1 = \sqrt{2 \times 9.81 \times 0.4}$

$v_1 = 2.8$ m/s (↑)

Coefficient of restitution

$$e = -\left[\frac{v_2 - v_1}{u_2 - u_1}\right] = -\left[\frac{0 - 2.8}{0 - (-3.43)}\right]$$

$e = 0.816$

(ii) The plate is kept on the foam rubber mat

$u_1 = \sqrt{2 \times 9.81 \times 0.6}$

$u_1 = 3.43$ m/s (↓)

$v_1 = \sqrt{2 \times 9.81 \times 0.25}$

$v_1 = 2.215$ m/s (↑)

Coefficient of restitution gives

$$e = -\left[\frac{v_2 - v_1}{u_2 - u_1}\right]$$

$$0.816 = -\left[\frac{-v_2 - 2.215}{0 - (-3.43)}\right]$$

$\therefore\ v_2 = 0.584$ m/s (↓)

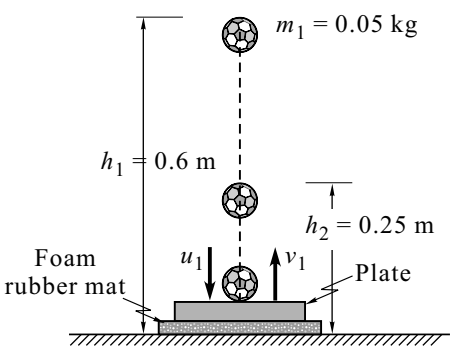

$u_2 = 0$,
v_2 (↓) (velocity of plate after impact)
m_2 (mass of the plate)

Fig. 15.6(b)

(iii) By law of conservation of momentum, we have

$m_1u_1 + m_2u_2 = m_1v_1 + m_2v_2$

$0.05 \times (-3.43) + m_2 \times 0 = 0.05 \times 2.215 + m_2 \times (-0.584)$

$\therefore\ m_2 = 0.483$ kg (mass of the plate)

Problem 7

A glass ball is dropped onto a smooth horizontal floor from which it bounces to a height of 9 m as shown in Fig.15.7(a). On the second bounce, it attains a height of 6 m. What is the coefficient of restitution between the glass and the floor? Also determine the height from where the glass ball was dropped.

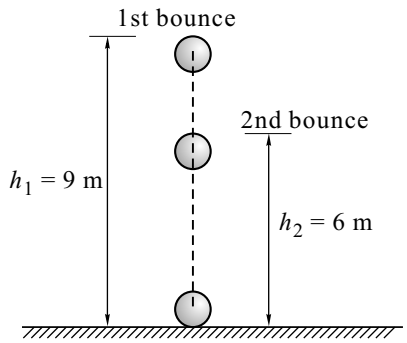

$u_2 = v_2 = 0$ (velocity of horizontal floor)

Fig. 15.7(a)

Solution

(i) $u_1 = \sqrt{2gh_1}$ (↓) (velocity before impact)

$v_1 = \sqrt{2gh_2}$ (↑) (velocity after impact)

(ii) Coefficient of restitution gives

$$e = -\left[\frac{v_2 - v_1}{u_2 - u_1}\right] = -\left[\frac{0 - v_1}{0 - u_1}\right] = -\frac{v_1}{u_1}$$

$$e = -\frac{\sqrt{2gh_2}}{-\sqrt{2gh_1}} = \frac{\sqrt{h_2}}{\sqrt{h_1}} = \sqrt{\frac{6}{9}}$$

$$e = 0.816$$

(iii) Coefficient of restitution gives

$$e = -\left[\frac{v_2 - v_1}{u_2 - u_1}\right]$$

$$0.816 = -\left[\frac{0 - \sqrt{2 \times 9.81 \times 9}}{0 - \left(-\sqrt{2 \times 9.81 \times h}\right)}\right]$$

$$0.816 = \sqrt{\frac{9}{h}}$$

$$\therefore\ h = 13.52 \text{ m}$$

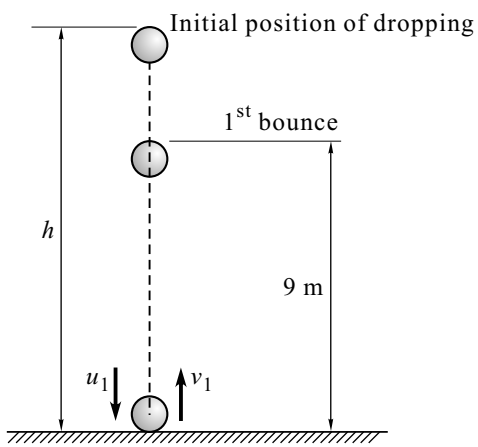

$u_2 = v_2 = 0$ (velocity of surface)

Fig. 15.7(b)

Problem 8

A heavy elastic ball shown in Fig.15.8(a), drops from the ceiling of a room and after rebounding twice from the floor reaches a height equal to one half of the height of ceiling. Find the coefficient of restitution.

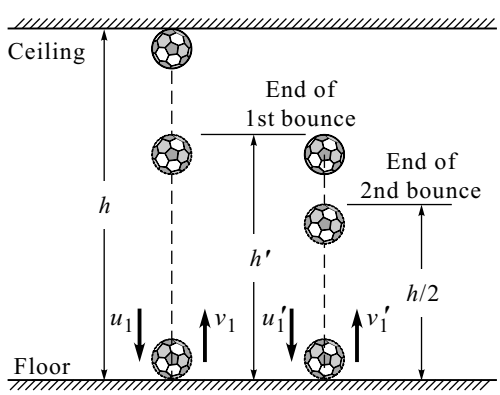

$u_2 = v_2 = 0$ (velocity of surface)

Fig. 15.8(a)

Solution

(i) Ball is released from ceiling having height h and bounces to height h'.

By coefficient of restitution, we have

$$e = -\left[\frac{v_2 - v_1}{u_2 - u_1}\right] = -\left[\frac{0 - \sqrt{2gh'}}{0 - \left(-\sqrt{2gh}\right)}\right]$$

$$e = \sqrt{\frac{h'}{h}} \quad \therefore \; he^2 = h'$$

(ii) Ball falls from height h' and second bounces to height $h/2$.

$$e = -\left[\frac{v_2 - v_1'}{u_2 - u_1'}\right] = -\left[\frac{0 - \sqrt{2g\frac{h}{2}}}{0 - \left(-\sqrt{2gh'}\right)}\right]$$

$$e = \sqrt{\frac{\frac{h}{2}}{h'}} = \sqrt{\frac{h}{2h'}} = \sqrt{\frac{h}{2he^2}} = \sqrt{\frac{1}{2e^2}}$$

Squaring both sides

$$\therefore \; e^2 = \frac{1}{2e^2} \quad \therefore \; e^4 = \frac{1}{2}$$

$$\therefore \; e = 0.841$$

Problem 9

A ball falling from a height of 1 m hits the ground and rebounds with half its velocity just before impact. Then after rising, it falls and hits the ground and again rebounds with half its velocity just before impact, and so on. Determine total distance travelled by the ball till it comes to rest on the ground.

Solution

Refer to Fig. 15.9.

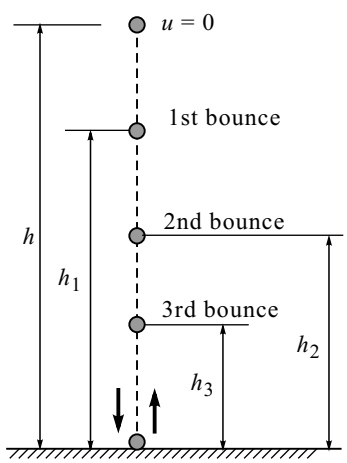

Fig. 15.9

(i) For the first bounce,

u_1 = Velocity just before impact

$v_1 = \frac{u_1}{2}$ = Velocity just after impact

$$e = -\left[\frac{v_2 - v_1}{u_2 - u_1}\right] = -\left[\frac{0 - \frac{u_1}{2}}{0 - (-u_1)}\right] = \frac{1}{2}$$

Also, $e^2 = \frac{h_1}{h} = \frac{h_2}{h_1} = \frac{h_3}{h_2} = ...$

$h_1 = 1$ m (given)

$\therefore \; h_1 = e^2, \; h_2 = e^4, \; h_3 = e^6, ...$

(ii) Total distance travelled

$$d = h + 2h_1 + 2h_2 + 2h_3 + ...$$

$$d = 1 + 2e^2 + 2e^4 + 2e^6 + ... = 1 + 2 \times \left(\frac{1}{2}\right)^2 + 2 \times \left(\frac{1}{2}\right)^4 + 2 \times \left(\frac{1}{2}\right)^6 + ...$$

$$= 1 + \frac{2}{4} + \frac{2}{16} + \frac{2}{64} + ...$$

$$d = \frac{5}{3} = 1.667 \text{ m}$$

Problem 10

A ball is thrown vertically downwards with a velocity of u from a height of 1 m so that it hits the ground and just touches the ceiling after impact as shown in Fig.15.10. If the ceiling is 3.5 m high from the ground and if the coefficient of restitution is $e = 0.7$, determine the velocity u with which the ball is thrown.

Solution

(i) Velocity before impact

$$u_1 = \sqrt{u^2 + 2gh} \quad (\downarrow)$$

$$u_1 = \sqrt{u^2 + 2 \times 9.81 \times 1} \quad (\downarrow)$$

Velocity after impact

$$v_1 = \sqrt{2gh} \quad (\uparrow)$$

$$v_1 = \sqrt{2 \times 9.81 \times 3.5} \quad (\uparrow)$$

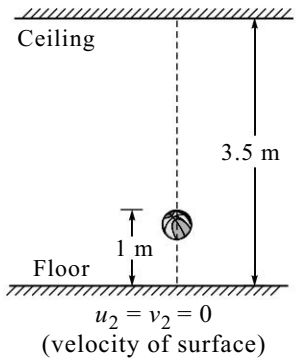

Fig. 15.10

(ii) Coefficient of restitution

$$e = -\left[\frac{v_2 - v_1}{u_2 - u_1}\right] = -\left[\frac{0 - \sqrt{2 \times 9.81 \times 3.5}}{0 - \left(-\sqrt{u^2 + 2 \times 9.81 \times 1}\right)}\right]$$

$$0.7 = \sqrt{\frac{2 \times 9.81 \times 3.5}{u^2 + 2 \times 9.81 \times 1}}$$

Squaring both the sides

$$0.49 = \frac{2 \times 9.81 \times 3.5}{u^2 + 2 \times 9.81 \times 1}$$

$$0.49(u^2 + 19.62) = 68.67$$

$$\therefore \; u = 10.98$$

Problem 11

A body of 2 kg mass is projected upwards from the surface of the ground at $t = 0$ with velocity of 20 m/s as shown in Fig.15.11(a). One second later another body of 2 kg mass is dropped from a height of 20 m. If they collide elastically, find velocities of both the bodies just after collision.

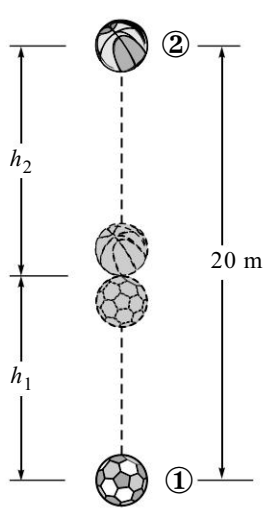

Fig. 15.11(a)

Solution

(i) Velocities of both the bodies before collision

Vertical upward motion of body ①

$$h = ut + \frac{1}{2}gt^2$$

$$h_1 = 20t - \frac{1}{2} \times 9.81 \times t^2 \qquad \text{... (I)}$$

Vertical downward motion of body ②

$$h = ut + \frac{1}{2}gt^2$$

$$h_2 = 0 + \frac{1}{2} \times 9.81 \times (t-1)^2 \qquad \text{... (II)}$$

$$h_1 + h_2 = 20 \quad \text{(given)}$$

Adding Eqs. (I) and (II), we get

$$20t - \frac{1}{2} \times 9.81 \times t^2 + \frac{1}{2} \times 9.81 \times (t-1)^2 = 20$$

$$20t - 4.905 \times t^2 + 4.905 \times (t-1)^2 = 20$$

$$\therefore \; t = 1.48 \text{ seconds}$$

For body ①

$$v = u + gt$$

$$u_1 = 20 + (-9.81) \times 1.48$$

$$u_1 = 5.481 \text{ m/s } (\uparrow)$$

For body ②

$$v = u + gt$$

$$u_2 = 0 + 9.81 \times (1.48 - 1)$$

$$u_2 = 4.709 \text{ m/s } (\downarrow)$$

(ii) Impact between two bodies

Method I

By law of conservation of momentum, we have

$$m_1u_1 + m_2u_2 = m_1v_1 + m_2v_2$$

$$2 \times 5.481 + 2 \times (-4.709) = 2v_1 + 2v_2$$

$$v_1 + v_2 = 0.772 \qquad \text{... (III)}$$

By coefficient of restitution, we have

$$e = -\left[\frac{v_2 - v_1}{u_2 - u_1}\right] \quad \Rightarrow \quad 1 = -\left[\frac{v_2 - v_1}{5.481 - (-4.709)}\right]$$

$$v_2 - v_1 = 10.19 \qquad \text{... (IV)}$$

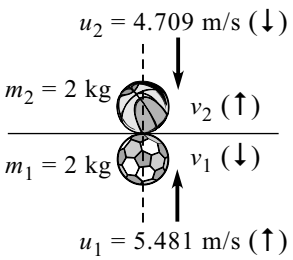

Fig. 15.11(b)

Solving Eqs. (III) and (IV), we get

$$\left.\begin{aligned} v_1 &= -4.709 \text{ m/s} = 4.709 \text{ m/s } (\downarrow) \\ v_2 &= 5.481 \text{ m/s } (\uparrow) \end{aligned}\right\} \text{ Velocity after impact}$$

Method II

$\because \; u_1 = 5.481 \text{ m/s } (\uparrow) \quad \therefore \; v_2 = 4.709 \text{ m/s } (\downarrow)$

$\because \; u_2 = 4.709 \text{ m/s } (\downarrow) \quad \therefore \; v_1 = 5.481 \text{ m/s } (\uparrow)$

When collision happens between two perfectly elastic bodies ($e = 1$) then velocities of bodies before and after impact get interchanged in magnitude and are opposite to its original direction.

Problem 12

Two smooth spheres ① and ② having masses of 2 kg and 4 kg respectively collide with initial velocities as shown in Fig. 15.12(a). If the coefficient of restitution for the spheres is $e = 0.8$, determine the velocities of each sphere after collision.

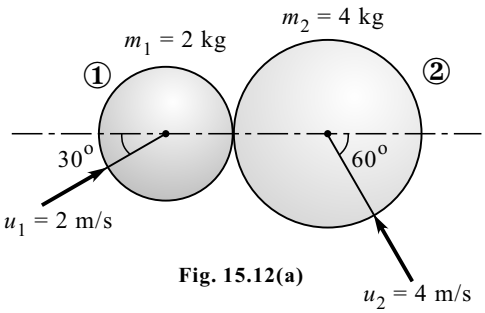

Fig. 15.12(a)

Solution

(i) By law of conservation of momentum along line of impact, we have

$$m_1u_{1x} + m_2u_{2x} = m_1v_{1x} + m_2v_{2x}$$

$$2 \times 2 \cos 30^\circ + 4 \times (-4 \cos 60^\circ) = 2(-v_{1x}) + 2v_{2x}$$

$$-v_{1x} + 2v_{2x} = -2.268 \quad \text{... (I)}$$

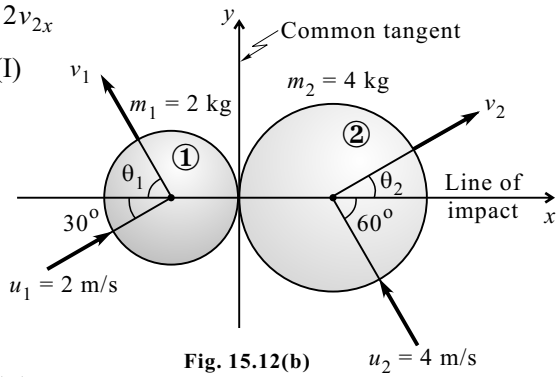

Fig. 15.12(b)

Coefficient of restitution along the line of impact gives

$$e = -\left[\frac{v_{2x} - v_{1x}}{u_{2x} - u_{1x}}\right]$$

$$0.8 = -\left[\frac{v_{2x} - (-v_{1x})}{-4 \cos 60^\circ - 2 \cos 30^\circ}\right]$$

$$v_{2x} + v_{1x} = 2.986 \text{ m/s} \quad \text{... (II)}$$

Solving Eqs. (I) and (II), we get

$$v_{1x} = 2.747 \text{ m/s } (\leftarrow) \quad \text{and} \quad v_{2x} = 0.239 \text{ m/s } (\rightarrow)$$

(ii) Component of velocity before and after impact along a common tangent is conserved.

$$v_{1y} = 2 \sin 30^\circ$$

$$v_{1y} = 1 \text{ m/s } (\uparrow)$$

For v_1, we have

$$\tan \theta_1 = \frac{v_{1y}}{v_{1x}} = \frac{1}{2.747}$$

$$\theta_1 = 20^\circ$$

$$v_1 = \sqrt{v_{1x}^2 + v_{1y}^2}$$

$$= \sqrt{2.747^2 + 1^2}$$

$$v_1 = 2.923 \text{ m/s } (\theta_1)$$

Velocity of sphere ①

$$v_{2y} = 4 \sin 60^\circ$$

$$v_{2y} = 3.464 \text{ m/s } (\uparrow)$$

For v_2, we have

$$\tan \theta_2 = \frac{v_{2y}}{v_{2x}} = \frac{3.464}{0.239}$$

$$\theta_2 = 86.05^\circ$$

$$v_2 = \sqrt{v_{2x}^2 + v_{2y}^2}$$

$$= \sqrt{0.239^2 + 3.464^2}$$

$$v_2 = 3.472 \text{ m/s } (\theta_2)$$

Velocity of sphere ②

Problem 13

Two smooth balls, ball ① of mass 3 kg and ball ② of 4 kg mass are moving with velocities 25 m/s and 40 m/s respectively at an angle of 30° and 60° with the vertical as shown in Fig. 15.13(a). If coefficient of restitution between two balls is 0.8, find the magnitude and direction of velocities of these balls after impact.

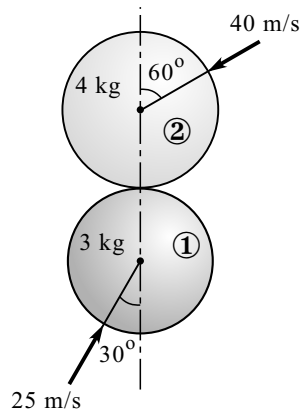

Fig. 15.13(a)

Solution

(i) By law of conservation of momentum along line of impact, we have

$$m_1 u_{1y} + m_2 u_{2y} = m_1 v_{1y} + m_2 v_{2y}$$

$$3 \times 25 \cos 30^\circ + 4 \times (-4 \cos 60^\circ) = 3(-v_{1y}) + 4v_{2y}$$

$$-3v_{1y} + 4v_{2y} = -15.05 \qquad \text{... (I)}$$

(ii) Coefficient of restitution along the line of impact gives

$$e = -\left[\frac{v_{2y} - v_{1y}}{u_{2y} - u_{1y}}\right]$$

$$0.8 = -\left[\frac{v_{2y} - (-v_{1y})}{-40 \cos 60^\circ - 25 \cos 30^\circ}\right]$$

$$v_{1y} + v_{2y} = 33.32 \text{ m/s} \qquad \text{... (II)}$$

Solving Eqs. (I) and (II), we get

$$v_{1y} = 21.19 \text{ m/s } (\downarrow) \quad \text{and} \quad v_{2y} = 12.13 \text{ m/s } (\uparrow)$$

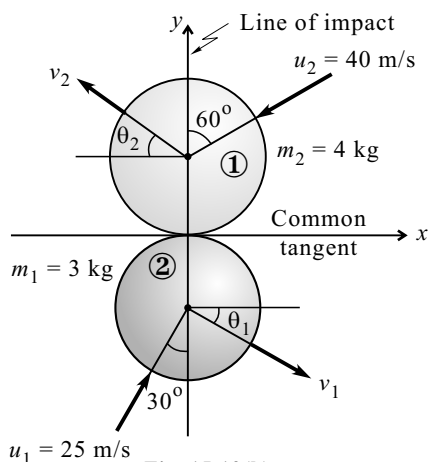

Fig. 15.13(b)

(iii) Component of velocity before and after impact along a common tangent is conserved.

$$v_{1x} = 25 \sin 30^\circ$$

$$v_{1x} = 12.5 \text{ m/s } (\rightarrow)$$

For v_1, we have

$$\tan \theta_1 = \frac{v_{1y}}{v_{1x}} = \frac{21.19}{12.5}$$

$$\theta_1 = 59.46^\circ$$

$$v_1 = \sqrt{v_{1x}^2 + v_{1y}^2} = \sqrt{12.5^2 + 21.19^2}$$

$$v_1 = 24.60 \text{ m/s } (\searrow \theta_1)$$

Velocity of sphere ①

$$v_{2x} = 40 \sin 60^\circ$$

$$v_{2x} = 34.64 \text{ m/s } (\leftarrow)$$

For v_2, we have

$$\tan \theta_2 = \frac{v_{2y}}{v_{2x}} = \frac{12.13}{34.64}$$

$$\theta_2 = 19.30^\circ$$

$$v_2 = \sqrt{v_{2x}^2 + v_{2y}^2} = \sqrt{34.64^2 + 12.13^2}$$

$$v_2 = 36.70 \text{ m/s } (\theta_2 \searrow)$$

Velocity of sphere ②

Problem 14

Two identical balls of 120 g collide when they are moving with velocity perpendicular to each other as shown in Fig. 15.14(a). Assuming that the line of impact is in the direction of motion of ball ②, determine the velocity of ball ① and ② completely after the impact. Take $e = 0.8$,

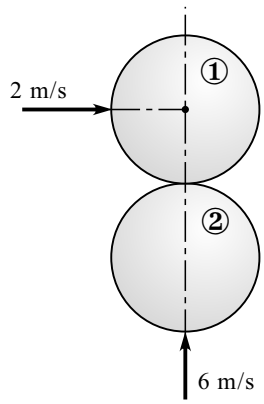

Fig. 15.14(a)

Solution

Here, $m_1 = m_2 = 0.12$ kg

$u_1 = 2$ m/s $(\rightarrow)$ and $u_2 = 6$ m/s $(\uparrow)$

$v_1 \left(\angle \theta_1\right)$ and $v_2 \left(\angle \theta_2\right)$ ..... (Assumed)

(i) By law of conservation of momentum along line of impact, we have

$$m_1 u_{1y} + m_2 u_{2y} = m_1 v_{1y} + m_2 v_{2y}$$

$$u_{1y} + u_{2y} = v_{1y} + v_{2y}$$

$$0 + 6 = v_{1y} + v_{2y}$$

$$v_{1y} + v_{2y} = 6 \qquad \text{... (I)}$$

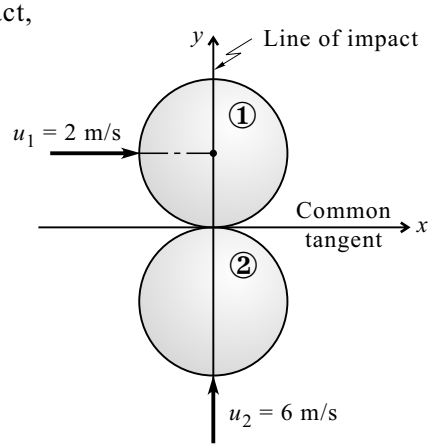

Fig. 15.14(b)

(ii) Coefficient of restitution along the line of impact gives

$$e = -\left[\frac{v_{2y} - v_{1y}}{u_{2y} - u_{1y}}\right]$$

$$0.8 = -\left[\frac{v_{2y} - v_{1y}}{6 - 0}\right]$$

$$-v_{2y} + v_{1y} = 4.8 \qquad \text{... (II)}$$

Solving Eqs. (I) and (II), we get

$v_{1y} = 5.4$ m/s $(\uparrow)$ and $v_{2y} = 0.6$ m/s $(\uparrow)$

(iii) Component of velocity before and after impact along a common tangent is conserved.

$v_{1x} = 2$ m/s $(\rightarrow)$

For v_1, we have

$$\tan \theta_1 = \frac{v_{1y}}{v_{1x}} = \frac{5.4}{2}$$

$$\theta_1 = 69.68^{\circ}$$

$$v_1 = \sqrt{v_{1x}^2 + v_{1y}^2} = \sqrt{2^2 + 5.4^2}$$

$\therefore\ v_1 = 5.758$ m/s $\left(\angle \theta_1\right)$

Velocity of sphere ①

$v_{2x} = 0$

For v_2, we have

$\because\ v_{2x} = 0$

$v_{2y} = v_2$

$\therefore\ v_2 = 0.6$ m/s $(\uparrow)$

Velocity of sphere ②

Problem 15

Two balls of same mass of 0.5 kg are moving with velocities as shown in Fig. 15.15(a) collide. If after collision ball ② travels along a line 30° counter clockwise from y-axis, determine the coefficient of restitution.

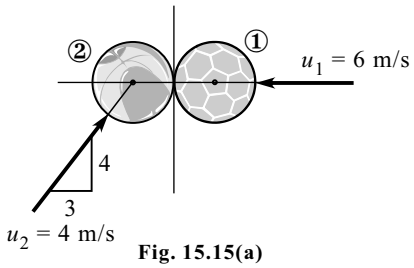

Fig. 15.15(a)

Solution

(i) By law of conservation of momentum along line of impact, we have

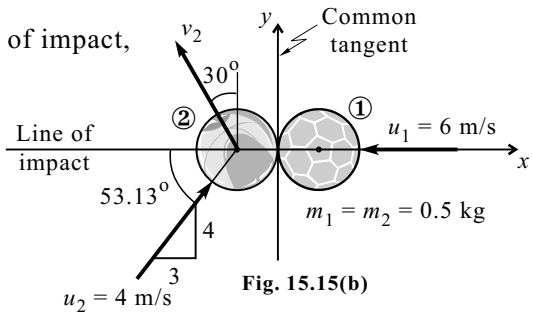

Fig. 15.15(b)

$$m_1u_{1x} + m_2u_{2x} = m_1v_{1x} + m_2v_{2x}$$

$$u_{1x} + u_{2x} = v_{1x} + v_{2x}$$

$$-6 + 4 \cos 53.13^\circ = v_{1x} + (-v_2 \cos 60^\circ)$$

$$v_{1x} - 0.5v_2 = -3.6$$

$$2v_{1x} - v_2 = -7.2 \qquad \text{... (I)}$$

(ii) Component of velocity before and after impact along a common tangent is conserved.

$$v_2 \sin 60^\circ = 4 \sin 53.13^\circ$$

$$v_2 = 3.7 \text{ m/s}$$

From Eq. (I)

$$2v_{1x} - 3.7 = -7.2$$

$$v_{1x} = -1.75 \text{ m/s} \qquad \therefore v_{1x} = 1.75 \text{ m/s } (\leftarrow)$$

$$\because v_{1y} = 0 \quad \therefore v_1 = v_{1x} = 1.75 \text{ m/s } (\leftarrow)$$

Coefficient of restitution along the line of impact gives

$$e = -\left[\frac{v_{2x} - v_{1x}}{u_{2x} - u_{1x}}\right]$$

$$e = -\left[\frac{-3.7 \cos 60 - (-1.75)}{4 \cos 53.13 - (-6)}\right]$$

$$\therefore e = 0.012$$

Problem 16

A billiard ball shown in Fig. 15.16 moving with a velocity of 5 m/s strikes smooth horizontal plane at an angle of 45° with the horizontal. If e = 0.6 between ball and plane what is the velocity with which the ball rebounds?

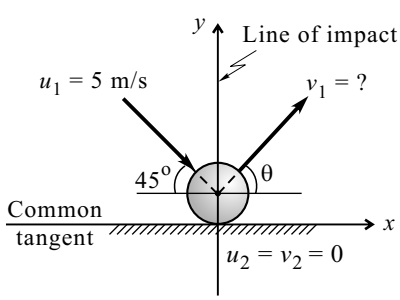

Fig. 15.16

Solution

(i) Coefficient of restitution along the line of impact gives

$$e = -\left[\frac{v_{2y} - v_{1y}}{u_{2y} - u_{1y}}\right]$$

$$0.6 = -\left[\frac{0 - v_{1y}}{0 - (-5 \sin 45^\circ)}\right]$$

$$v_{1y} = 2.12 \text{ m/s } (\uparrow)$$

(ii) Component of velocity before and after impact along a common tangent is conserved.

$$v_{1x} = 5 \cos 45^\circ \qquad \therefore v_{1x} = 3.54 \text{ m/s } (\rightarrow)$$

$$\tan \theta = \frac{v_{1y}}{v_{1x}} = \frac{2.12}{3.54} \qquad \therefore \theta = 30.92^\circ$$

$$v_1 = \sqrt{v_{1x}^2 + v_{1y}^2} = \sqrt{3.54^2 + 2.12^2}$$

$$\therefore v = 4.126 \text{ km/hr } \left(\angle 30.92^\circ\right)$$

The ball rebounds with a 4.126 m/s velocity at an angle of 30.92° w.r.t. x-axis.

Problem 17

A ball is thrown against a wall with a velocity u forming an angle of 30° with the horizontal as shown in Fig. 15.17(a). Assuming frictionless conditions and $e = 0.5$, determine the magnitude and direction of velocity of ball after it rebounds from the wall.

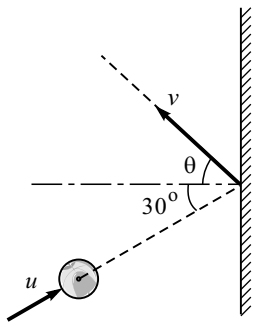

Fig. 15.17(a)

Solution

(i) Coefficient of restitution along the line of impact gives

$$e = -\left[\frac{v_{2x} - v_{1x}}{u_{2x} - u_{1x}}\right]$$

$$0.5 = -\left[\frac{0 - (-v_1 \cos \theta)}{0 - u_1 \cos 30^\circ}\right]$$

$$0.433u_1 = v_1 \cos \theta \qquad \text{... (I)}$$

(ii) Component of velocity before and after along a common tangent is conserved.

$$u_1 \sin 30 = v_1 \sin \theta \qquad \text{... (II)}$$

Dividing Eq. (I) by Eq. (II),

$$\frac{0.433u_1}{u_1 \sin 30} = \frac{v_1 \cos \theta}{v_1 \sin \theta}$$

$$\tan \theta = \frac{\sin 30^\circ}{0.433} \qquad \therefore \theta = 49.12^\circ$$

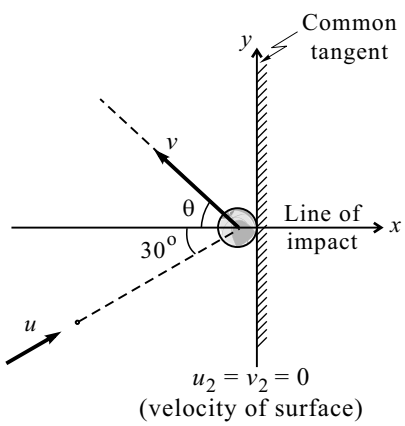

Fig. 15.17(b)

Putting the value in Eq. (I), we get

$$0.433u_1 = v_1 \cos 49.12^\circ$$

$$v_1 = 0.6616u$$

The ball rebounds with velocity $0.661u$ at an angle of 49.12°.

Problem 18

A ball is dropped on an inclined plane from a height of 3 m vertically down and is observed to move horizontally with a velocity v as shown in Fig. 15.18(a). If the coefficient of restitution is $e = 0.6$, determine the inclination of the plane and the velocity of the ball after impact.

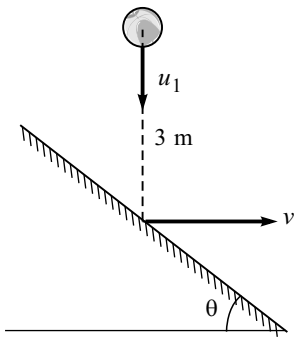

Fig. 15.18(a)

Solution

(i) Velocity before impact

$$u_1 = \sqrt{u^2 + 2gh} = \sqrt{0 + 2 \times 9.81 \times 3}$$

$$u_1 = 7.672 \text{ m/s} \quad (\downarrow)$$

(ii) Coefficient of restitution along the line of impact gives

$$e = -\left[\frac{v_{2y} - v_{1y}}{u_{2y} - u_{1y}}\right] \Rightarrow 0.6 = -\left[\frac{0 - v_1 \sin\theta}{0 - (-7.672 \cos\theta)}\right]$$

$$v_1 \sin\theta = 4.603 \cos\theta$$

$$v_1 = 4.603 \cot\theta \qquad \text{... (I)}$$

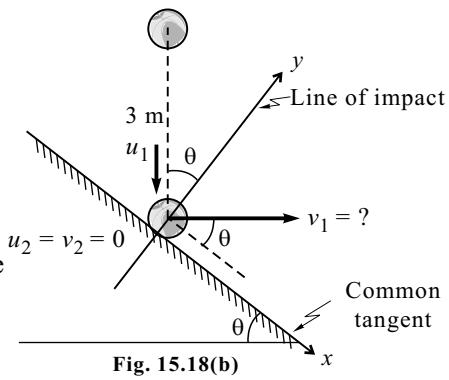

Fig. 15.18(b)

(iii) Component of velocity along a common tangent before and after impact is conserved.

$$v_1 \cos\theta = 7.672 \sin\theta$$

$$v_1 = 7.672 \tan\theta \qquad \text{... (II)}$$

From Eqs. (I) and (II), we get

$$4.603 \cot\theta = 7.672 \tan\theta$$

$$\tan^2\theta = \frac{1}{1.667}$$

$\therefore\ \theta = 37.76^\circ$ (Inclination of the plane)

From Eq. (II), we get

$$v_1 = 7.672 \tan 37.76^\circ$$

$\therefore\ v_1 = 5.942$ m/s ($\rightarrow$) (Velocity of the ball after impact)

Problem 19

A ball of 20 N weight is suspended from an elastic cord tied to an inclined ceiling. It is stretched vertically down by 0.3 m and then released. The ball travels vertically up and strikes the ceiling. Find the speed of the ball **(i)** just before impact, and **(ii)** just after impact. Take $e = 0.7$.

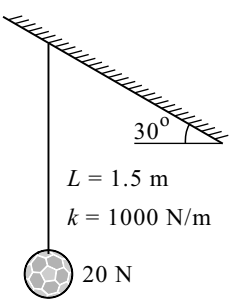

Fig. 15.19(a)

Solution

(i) By work - energy principle, we have

Work done = Change in kinetic energy

$$\frac{1}{2} \times 1000 \times (0.3^2 - 0^2) - 20 \times 1.8 = \frac{1}{2} \times \frac{20}{9.81} \times u_1^2 - 0$$

$$9 = 1.0194\, u_1^2$$

$u_1 = 2.971$ m/s ($\uparrow$) (velocity just before impact)

(ii) Coefficient of restitution along the line of impact gives

$$e = -\left[\frac{v_{2y} - v_{1y}}{u_{2y} - u_{1y}}\right]$$

$$0.7 = -\left[\frac{0 - (-v_{1y})}{0 - 2.971 \cos 30^o}\right]$$

$$v_{1y} = 1.8 \text{ m/s } \left(\angle 30^o\right)$$

(iii) Component of velocity along a common tangent before and after impact is same.

$$v_{1x} = 2.971 \sin 30^o \Rightarrow v_{1x} = 1.486 \text{ m/s } \left(\angle 30^o\right)$$

$$\tan\theta = \frac{v_{1y}}{v_{1x}} = \frac{1.8}{1.486} \quad \Rightarrow \theta = 50.46^o$$

$$\alpha = \theta - 30 = 50.46 - 30 \Rightarrow \alpha = 20.46^o$$

$$v_1 = \sqrt{v_{1x}^2 + v_{1y}^2} = \sqrt{1.486^2 + 1.8^2}$$

$$\therefore v_1 = 2.334 \text{ m/s } \left(\angle \alpha\right)$$

The ball after impact rebounds with a velocity of 2.334 m/s $\left(\angle 20.46^o\right)$.

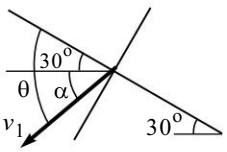

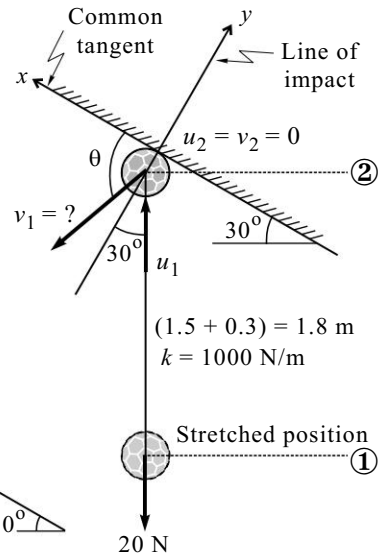

Fig. 15.19(b)

Problem 20

A ball is dropped from a height of 5 m on an inclined surface of 30° inclination as shown in Fig. 15.20(a). Find the velocity of the ball after impact, take $e = 0.6$.

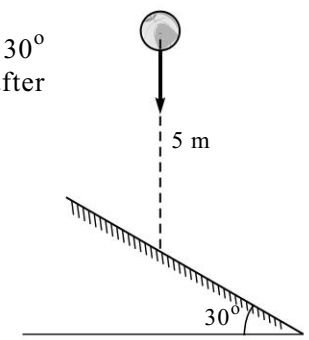

Fig. 15.20(a)

Solution

(i) Velocity before impact

$$u_1 = \sqrt{u^2 + 2gh} = \sqrt{0 + 2 \times 9.81 \times 5} = 9.905 \text{ m/s } (\downarrow)$$

$$u_{1y} = u_1 \cos 30^o = 9.905 \cos 30^o = 8.578 \text{ m/s } (\downarrow)$$

(ii) By coefficient of restitution along the line of impact, we have

$$e = -\left[\frac{v_{2y} - v_{1y}}{u_{2y} - u_{1y}}\right] \Rightarrow 0.8 = -\left[\frac{0 - v_{1y}}{0 - (-8.578)}\right]$$

$$v_{1y} = 6.862 \text{ m/s}$$

(iii) Component of velocity along a common tangent before and after impact is same.

$$v_{1x} = u_1 \sin 30^o = 9.905 \sin 30^o = 4.953 \text{ m/s}$$

$$\tan\alpha = \frac{v_{1y}}{v_{1x}} = \frac{6.862}{4.953}$$

$$\alpha = 54.18^o \text{ but } \alpha = \theta + 30^o \quad \therefore \theta = 24.18^o$$

$$v_1 = \sqrt{v_{1x}^2 + v_{1y}^2} = \sqrt{4.953^2 + 6.862^2}$$

$$\therefore v_1 = 8.463 \text{ m/s } \left(\angle \theta\right) \text{ (Velocity of the ball after impact)}$$

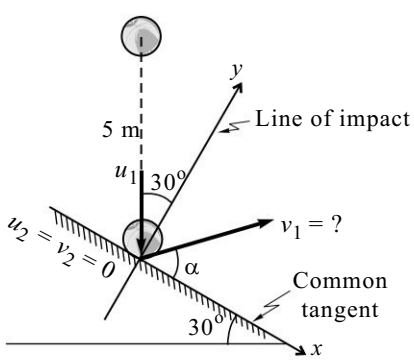

Fig. 15.20(b)

Problem 21

Ball A of mass m is released from rest and slides down a smooth bowl and strikes another ball B of mass $m/4$, which is resting at bottom of the bowl as shown in Fig. 15.21. Determine height h from which ball A should be released, so that after direct central impact, ball B just leaves the bowls surface. Take coefficient of restitution $e = 0.8$.

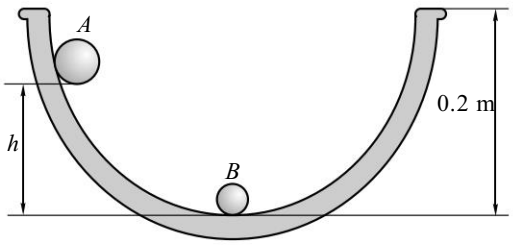

Fig. 15.21

Solution

$m_A = m_1 = m$; $u_A = u_1 = \sqrt{2gh}$; $v_A = v_1 = ?$

$m_B = m_2 = 0.25m$; $u_B = u_2 = 0$; $v_B = v_2 = \sqrt{2g \times 0.2} = 1.981$ m/s

(i) By law of conservation of momentum, we have

$$m_1u_1 + m_2u_2 = m_1v_1 + m_2v_2$$

$$m\sqrt{2gh} + 0 = mv_1 + 0.25mv_2$$

$$\sqrt{2gh} = v_1 + 0.25 \times 1.981$$

$$\sqrt{2gh} = v_1 + 0.495 \qquad \text{... (I)}$$

(ii) Coefficient of restitution gives

$$e = -\left[\frac{v_2 - v_1}{u_2 - u_1}\right] \Rightarrow 0.8 = -\left[\frac{1.981 - v_1}{0 - \sqrt{2gh}}\right]$$

$$0.8\sqrt{2gh} = 1.981 - v_1$$

$$\sqrt{2gh} = 2.476 - 1.25v_1 \qquad \text{... (II)}$$

Comparing Eqs. (I) and (II), we get

$$v_1 + 0.495 = 2.476 - 1.25v_1$$

$$v_1 = 0.88 \text{ m/s}$$

Substituting in Eq. (I), we get

$$\sqrt{2gh} = 0.88 + 0.495$$

$$\therefore\ h = 0.096 \text{ m}$$

Problem 22

A 900 kg car travelling at 48 km/h couples to a 680 kg car travelling at 24 km/h in same directions as shown in Fig. 15.22. What is their common speed after coupling?

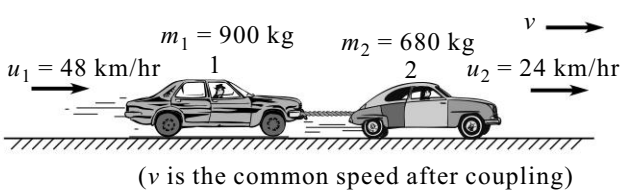

Fig. 15.22

Solution

By law of conservation of momentum, we have

$$m_1u_1 + m_2u_2 = (m_1 + m_2)v$$

$$900 \times 48 + 680 \times 24 = (900 + 680)v$$

$$v = 37.67 \text{ km/hr } (\rightarrow)$$

Problem 23

A body of 1000 kg mass moving at 30 km/h towards north collides with another body of 2000 kg mass moving at 20 km/h towards East as shown in Fig. 15.23. If the two bodies on collision combine, determine the final velocity of the combined body.

Solution

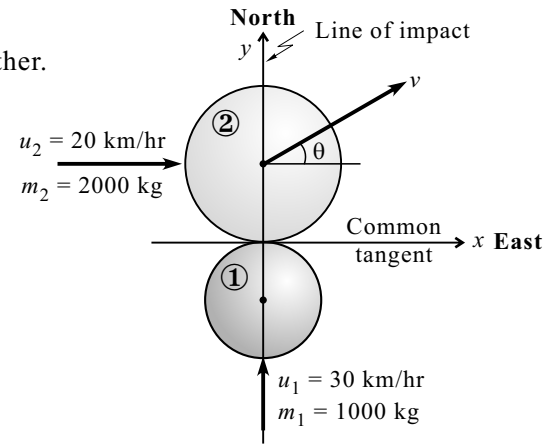

Fig. 15.23

(i) After collision, both the bodies will move together.
It means it is a perfectly plastic impact.

$m_1u_{1x} + m_2u_{2x} = (m_1 + m_2)v_x$

$1000 \times 0 + 2000 \times 20 = (1000 + 2000)v_x$

$v_x = 13.33$ km/hr (→)

$m_1u_{1y} + m_2u_{2y} = (m_1 + m_2)v_y$

$1000 \times 30 + 2000 \times 0 = (1000 + 2000)v_y$

$v_y = 10$ km/h

(ii) $\tan\theta = \dfrac{v_y}{v_x} = \dfrac{10}{13.33} \quad \therefore\ \theta = 36.88^\circ$

$v = \sqrt{v_x^2 + v_y^2} = \sqrt{13.33^2 + 10^2} \quad \therefore\ v = 16.66$ km/h $\left(\measuredangle 36.88^\circ\right)$

Problem 24

A 20 g bullet is fired with a velocity of 600 m/s magnitude into a 4.5 kg block of wood which is stationary as shown in Fig. 15.24. Knowing that the coefficient of kinetic friction between the block and the floor is 0.4, determine **(i)** how far the block will move, and **(ii)** the percentage of the initial energy lost in friction between the block and the floor.

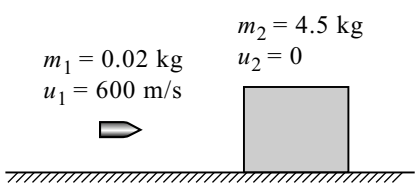

Fig. 15.24(a)

Solution

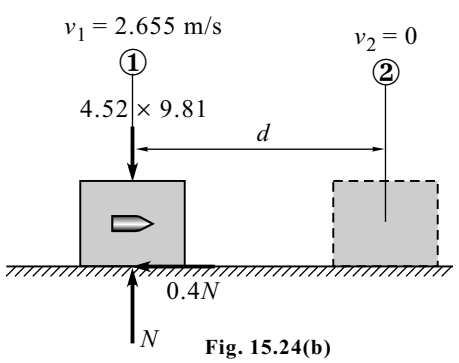

Fig. 15.24(b)

(i) By law of conservation of energy, we have

$m_1u_1 + m_2u_2 = (m_1 + m_2)v_1$

$0.02 \times 600 + 0 = (0.02 + 4.5)v_1$

$v_1 = 2.655$ m/s (→)

(velocity of bullet and block together after impact)

(ii) By work - energy principle, we have

Work done = Change in kinetic energy

$-0.4 \times 4.52 \times 9.81 \times d = 0 - \dfrac{1}{2} \times 4.52 \times 2.655^2$

$\therefore\ d = 0.9$ m

(iii) Initial K.E. $= \dfrac{1}{2} \times 0.02 \times 600^2 = 3600$ J

Energy lost in friction $= 0.4 \times 4.52 \times 9.81 \times 0.9 = 15.93$ J

$\therefore$ percentage loss $= \dfrac{15.93}{3600} = 0.44$ %

Problem 25

A 750 kg hammer of a drop hammer pile driver falls from a height of 1.2 m onto the top of a pile as shown in Fig. 15.25. The pile is driven 100 mm into the ground. Assume perfectly plastic impact, determine the average resistance of the ground to penetration. Assume mass of pile as 2250 kg.

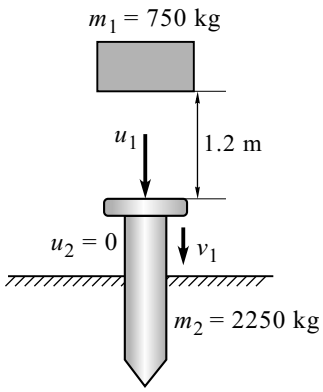

Fig. 15.25(a)

Solution

(i) Velocity before impact

$m_1 = 750$ kg

$u_1 = \sqrt{u^2 + 2gh}$

$= \sqrt{0 + 2 \times 9.81 \times 1.2}$

$u_1 = 4.852$ m/s (↓)

$m_2 = 2250$ kg

$u_2 = 0$

(ii) For a perfectly plastic impact,

$m_1u_1 + m_2u_2 = (m_1 + m_2)v_1$

$750 \times 4.852 + 2250 \times 0 = (750 + 2250)v_1$

$v_1 = 1.213$ m/s (↓)

After impact, both hammer and pile will move together with velocity $v_1 = 1.213$ m/s (↓)

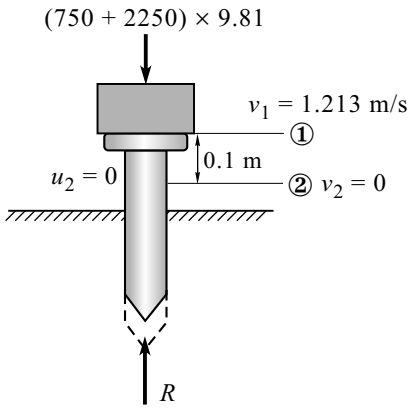

Fig. 15.25(b)

(iii) By work - energy principle, we have

Work done = Change in kinetic energy

$(750 + 2250) \times 9.81 \times 0.1 - R \times 0.1$

$= 0 - \frac{1}{2} \times (750 + 2250) \times 1.213^2$

$R = 51482.3$ N (↑)

Average resistance force of the ground $R = 51482.3$ N (↑)

Problem 26

A simple pendulum as shown in Fig. 15.26(a) is released from rest when it was in the horizontal position OA and falls in a vertical plane under the influence of gravity. If it strikes a vertical wall at B and coefficient of restitution $e = 0.5$, find the angle θ defining its total rebound.

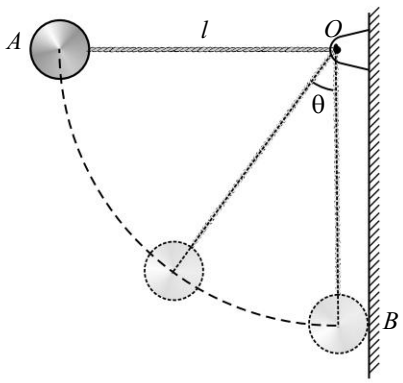

Fig. 15.26(a)

Solution

(i) Velocity of simple pendulum bob at B

$u_1 = \sqrt{2gl}\ (\rightarrow)\ ;\ v_1 = ?$

$v_2 = u_2 = 0$ (velocity of vertical wall)

(ii) Coefficient of restitution gives

$$e = -\left[\frac{v_2 - v_1}{u_2 - u_1}\right]$$

$$0.5 = -\left[\frac{0 - (-v_1)}{0 - \sqrt{2gl}}\right]$$

$$v_1 = 0.5\sqrt{2gl} \qquad \text{... (I)}$$

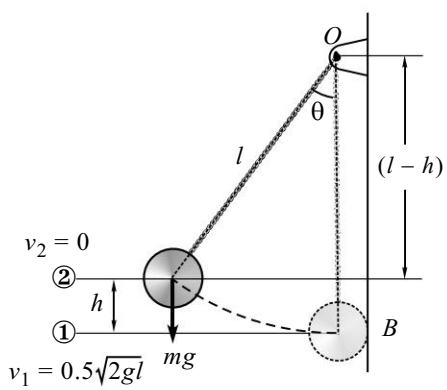

Fig. 15.26(b)

(iii) By work - energy principle, we have

Work done = Change in kinetic energy

$$-mgh = 0 - \frac{1}{2}m \times (0.5\sqrt{2gl})^2$$

$\therefore\ h = 0.25l$

(iv) $\cos\theta = \dfrac{l-h}{l} = \dfrac{l - 0.25l}{l}$

$\cos\theta = 0.75$

$\therefore\ \theta = 41.41^{\circ}$

Problem 27

A bullet of 10 g mass is moving with a velocity of 100 m/s and hits a 2 kg bob of a simple pendulum, horizontally as shown in Fig. 15.27(a). Determine the maximum angle θ through which the pendulum string 0.5 m long may swing if **(i)** the bullet gets embedded in the bob, and **(ii)** the bullet escapes from the other end of the bob with a velocity 10 m/s.

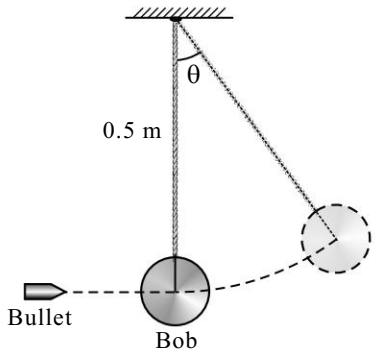

Fig. 15.27(a)

Solution

Case I : Find θ when the bullet gets embedded in the bob (Perfectly plastic impact)

(i) By law of conservation of momentum, we have

$m_1u_1 + m_2u_2 = (m_1 + m_2)v_1$

$0.01 \times 100 + 2 \times 0 = (0.01 + 2)v_1$

$v_1 = 0.4975$ m/s (→)

Velocity of bullet and bob together after impact $v_1 = 0.4975$ m/s (→).

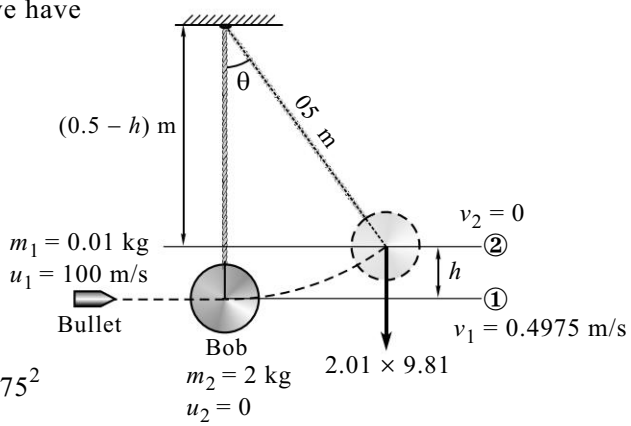

Fig. 15.27(b)

(ii) By work - energy principle, we have

Work done = Change in kinetic energy

$-2.01 \times 9.81 \times h = 0 - \frac{1}{2} \times 2.01 \times 0.4975^2$

$\therefore\ h = 0.0127$ m

(iii) $\cos\theta = \frac{0.5 - h}{0.5} = \frac{0.5 - 0.0127}{0.5}$

$\therefore\ \theta = 12.94^\circ$

Case II : Find θ when the bullet escapes from the other end of the bob with 10 m/s velocity

(i) By law of conservation of momentum, we have

$m_1u_1 + m_2u_2 = m_1v_1 + m_2v_2$

$0.01 \times 100 + 2 \times 0 = 0.01 \times 10 + 2 \times v_2$

$v_2 = 0.45$ m/s (→)

(ii) By work - energy principle, we have

Work done = Change in kinetic energy

$-2 \times 9.81 \times h = 0 - \frac{1}{2} \times 2 \times 0.45^2$

$\therefore\ h = 0.01032$ m

(iii) $\cos\theta = \frac{0.5 - h}{0.5} = \frac{0.5 - 0.01032}{0.5}$

$\therefore\ \theta = 11.66^\circ$

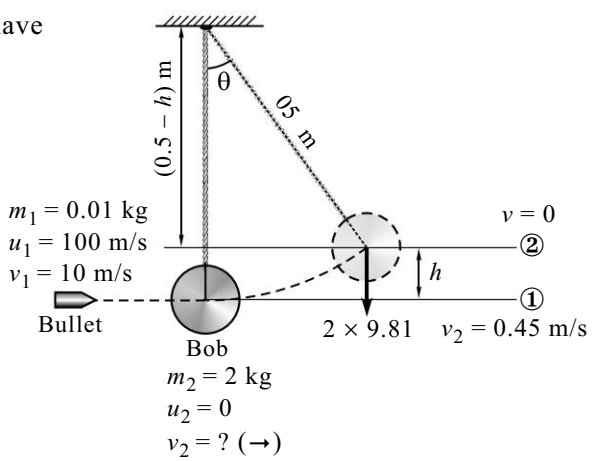

Fig. 15.27(c)

Problem 28

Block A is released from rest and slides without friction until it strikes the ball B of the simple pendulum as shown in Fig. 15.28(a). Knowing that the coefficient of restitution between block A and ball B is 0.9, determine **(i)** velocity of ball B immediately after impact, and **(ii)** maximum angular displacement of the pendulum. Mass of block A = 1.125 kg and mass of ball B = 1.8 kg.

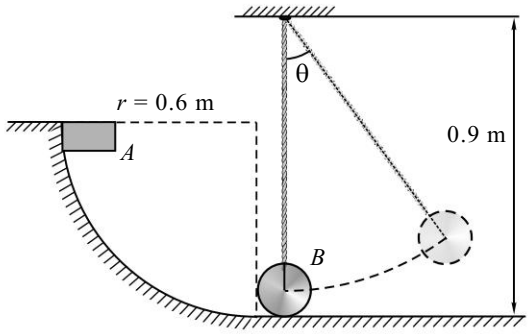

Fig. 15.28(a)

Solution

Case I : To find velocity of ball *B* immediately after impact

(i) $m_1 = 1.125$ kg and $m_2 = 1.8$ kg

$u_1 = \sqrt{2 \times 9.81 \times 0.6}$

$u_1 = 3.43$ m/s (→)

$u_2 = 0$

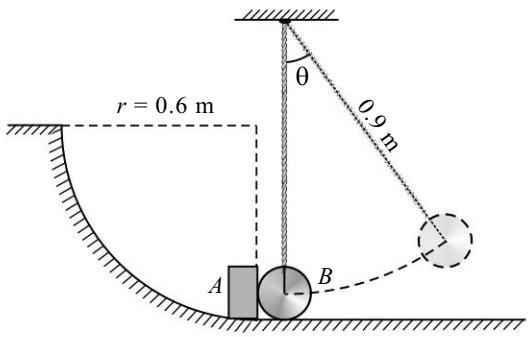

$m_1 = 1.125$ kg $m_2 = 1.8$ kg
$u_1 = 3.43$ m/s $u_2 = 0$
$v_1 = ?$ (→) $v_2 = ?$ (→)

Fig. 15.28(b)

(ii) By law of conservation of momentum, we have

$m_1u_1 + m_2u_2 = m_1v_1 + m_2v_2$

$1.125 \times 3.43 + 1.8 \times 0 = 1.125 \times v_1 + 1.8 \times v_2$

$1.125v_1 + 1.8v_2 = 3.859$ ... (I)

Coefficient of restitution gives

$$e = -\left[\frac{v_2 - v_1}{u_2 - u_1}\right]$$

$$0.9 = -\left[\frac{v_2 - v_1}{0 - 3.43}\right]$$

$v_2 - v_1 = 3.087$ ... (II)

Solving Eqs. (I) and (II), we get

$v_2 = 2.51$ m/s (→) (Velocity of ball B immediately after impact)

$v_1 = -0.577$ m/s $= 0.577$ m/s (←)

Case II : To find maximum angular displacement of the pendulum

(i) By work - energy principle, we have

Work done = Change in kinetic energy

$$-1.8 \times 9.81 \times h = 0 - \frac{1}{2} \times 1.8 \times 2.15^2$$

$\therefore\ h = 0.3211$ m

(ii) $\cos\theta = \dfrac{0.9 - 0.3211}{0.9}$

$\therefore\ \theta = 49.97^{\circ}$

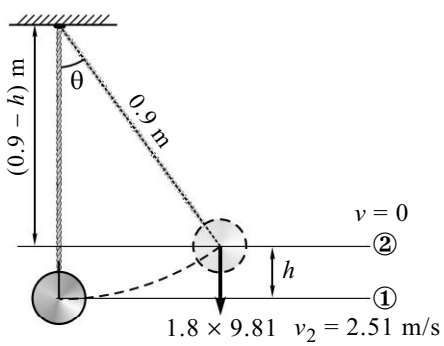

Fig. 15.28(c)

Problem 29

Determine the horizontal velocity u_A shown in Fig. 15.29(a) at which we must throw the ball so that it bounces once on the surface and then lands into the cup at C. Take coefficient of restitution between ball and surface as $e = 0.6$ and neglect the size of the cup.

Solution

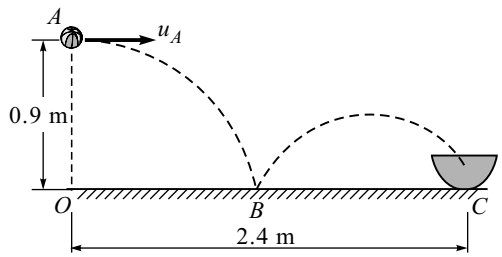

Fig. 15.29(a)

(i) Consider motion from *A* to *B*

Vertical motion

$$h = u\,t + \frac{1}{2}gt^2$$

$$0.9 = 0 + \frac{1}{2} \times 9.81 \times t_1^2$$

$$t_1 = 0.428 \text{ s}$$

$$v^2 = u^2 + 2gh$$

$$v = \sqrt{2 \times 9.81 \times 0.9} = 4.202 \text{ m/s}$$

$\therefore\ u_1 = 4.202$ m/s (↓) (velocity before impact at B)

(ii) Consider the impact at *B*

Coefficient of restitution gives

$$e = -\left[\frac{v_2 - v_1}{u_2 - u_1}\right]$$

$$0.6 = -\left[\frac{0 - v_1}{0 - (-4.202)}\right]$$

$\therefore\ v_1 = 2.52$ m/s (↑) (velocity of ball after impact)

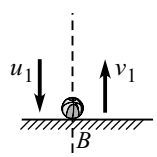

$u_2 = v_2 = 0$
(velocity of surface before and after impact)

Fig. 15.29(b)

(iii) Consider motion from *B* to *C*

Vertical motion

$$h = u\,t + \frac{1}{2}gt^2$$

$$0 = 2.52 \times t_2 - \frac{1}{2} \times 9.81 \times t_2^2$$

$$t_2 = 0.514 \text{ s}$$

(iv) Consider projectile motion from *A* to *B* and *B* to *C*

Total time $t = t_1 + t_2 = 0.428 + 0.514$

$t = 0.942$ s

In projectile motion, horizontal motion happens with constant velocity.

$\therefore$ Displacement = Velocity × Time

$2.4 = u_A \times 0.942$

$\therefore\ u_A = 2.548$ m/s (→)

Problem 30

A small steel ball is to be projected horizontally such that it bounces twice on the surface and lands into a cup placed at a distance of 8 m as shown in Fig. 15.30. If the coefficient of restitution for each impact is 0.8, determine the velocity of projection 'u' of the ball.

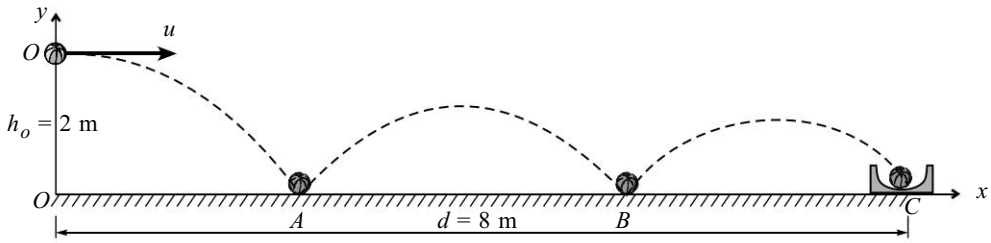

Fig. 15.30

Solution

(i) Consider motion from *O* to *A*

$u_{1y} = \sqrt{2 \times 9.81 \times 2} \qquad \therefore\ u_{1y} = 6.264 \text{ m/s} \quad (\downarrow)$

$v_{1yA} = ?\ (\uparrow)\ ;\ u_{2y} = v_{2y} = 0$ (velocity of flow before and after impact)

(ii) Impact at *A*

$$e = -\left[\frac{v_{2y} - v_{1y}}{u_{2y} - u_{1y}}\right] = -\left[\frac{0 - v_{1yA}}{0 - (-6.264)}\right] = 0.8$$

$v_{1yA} = 5.01 \text{ m/s } (\uparrow)$

(iii) Impact at *B*

$$e = -\left[\frac{v_{2y} - v_{1y}}{u_{2y} - u_{1y}}\right] = -\left[\frac{0 - v_{1yB}}{0 - (-5.01)}\right] = 0.8$$

$v_{1yB} = 4 \text{ m/s } (\uparrow)$

(iv) Time from *O* to *A*

$h = u\,t + \frac{1}{2}gt^2$

$2 = 0 + \frac{1}{2} \times 9.81 \times t_1^2$

$t_1 = 0.6386 \text{ s}$

(v) Time from *A* to *B*

$h = u\,t + \frac{1}{2}gt^2$

$0 = 5.01 \times t_2 - \frac{1}{2} \times 9.81 \times t_2^2$

$t_2 = 1.021 \text{ s}$

(vi) Time from *B* to *C*

$h = u\,t + \frac{1}{2}gt^2$

$0 = 4 \times t_3 - \frac{1}{2} \times 9.81 \times t_3^2$

$t_3 = 0.8155 \text{ s}$

(vii) Total time

$t = t_1 + t_2 + t_3 = 0.6386 + 1.021 + 0.8155$

$t = 2.475 \text{ s}$

(viii) For projectile motion and oblique impact, component of velocity in horizontal direction through the motion remains constant.

$\therefore$ Displacement = Velocity × Time

$8 = u \times 2.475$

$\therefore\ u = 3.232 \text{ m/s } (\rightarrow)$

Problem 31

At $t = 0$, both blocks are released from the position shown in Fig. 15.31(a). Find **(i)** the time at which impact occurs, and **(ii)** if $e = 0.8$, what are the velocities of blocks immediately after impact?

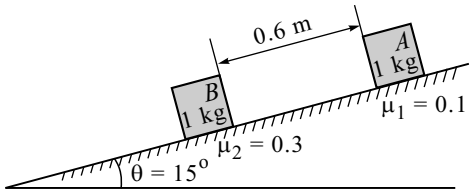

Fig. 15.31(a)

Solution

(i) We have, $\tan \phi_1 = \mu_1 = 0.1$

$\phi_1 = 5.71^o$

$\tan \phi_2 = \mu_2 = 0.3$

$\phi_2 = 16.69^o$

Comparing angle of friction with angle of incline plane, we can say

$\because$ $\phi_1 < 15^o$ $\therefore$ Block A will move downward by its self weight.

$\because$ $\phi_2 > 15^o$ $\therefore$ Block B will not move.

(ii) Consider the motion of block A

By work - energy principle, we have

Work done = Change in kinetic energy

$$1 \times 9.81 \sin 15 \times 0.6 - 0.1 \times 1 \times 9.81 \cos 15 \times 0.6 = \frac{1}{2} \times 1 \times u_1^2 - 0$$

$u_1 = 1.38$ m/s (velocity of block A before impact)

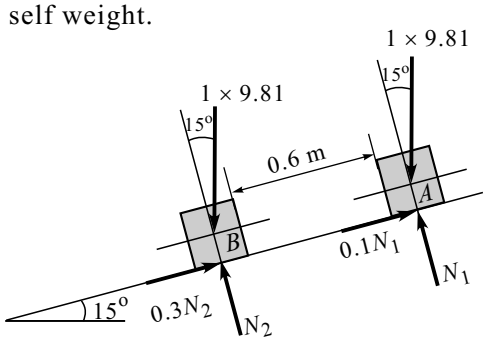

Fig. 15.31(b)

(iii) $s = \left(\frac{u+v}{2}\right) t$

$0.6 = \left(\frac{0 + 1.38}{2}\right) t$

$t = 0.87$ sec

(iv) Impact between block A and block B

By law of conservation of momentum, we have

$m_1u_1 + m_2u_2 = m_1v_1 + m_2v_2$

$u_1 + u_2 = v_1 + v_2$

$1.38 + 0 = v_1 + v_2$

$v_1 + v_2 = 1.38$ ... (I)

Coefficient of restitution gives

$$e = -\left[\frac{v_2 - v_1}{u_2 - u_1}\right] \Rightarrow 0.8 = -\left[\frac{v_2 - v_1}{0 - 1.28}\right]$$

$v_2 - v_1 = 1.104$ ... (II)

Solving Eqs. (I) and (II), we get

$v_1 = v_A = 0.138$ m/s $\left(15^o \swarrow\right)$ and $v_2 = v_B = 1.242$ m/s $\left(15^o \swarrow\right)$

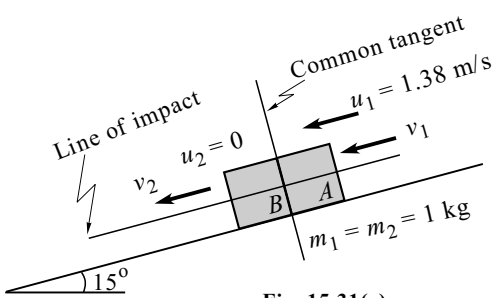

Fig. 15.31(c)

Problem 32

A 2 kg sphere B is moving with a velocity of 1.8 m/s when it strikes the vertical face of 4 kg block A which is at rest. The block A is supported on rollers and is attached to a spring of constant k = 5000 N/m as shown in Fig. 15.32(a). If e = 0.75 between the block and sphere, determine the maximum compression of the spring due to the impact.

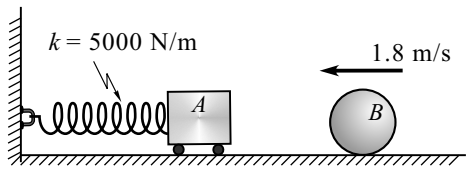

Fig. 15.32(a)

Solution

$m_A = m_1 = 4$ kg

$u_A = u_1 = 0$

$v_A = v_1 = ?\ (\leftarrow)$

$m_B = m_2 = 2$ kg

$u_B = u_2 = 1.8$ m/s $(\leftarrow)$

$v_B = v_2 = ?\ (\leftarrow)$

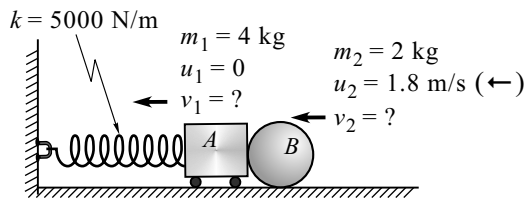

Fig. 15.32(b)

(i) By law of conservation of momentum, we have

$$m_1u_1 + m_2u_2 = m_1v_1 + m_2v_2$$

$$4 \times 0 + 2 \times 1.8 = 4 \times v_1 + 2 \times v_2$$

$$2v_1 + v_2 = 1.8 \qquad \text{... (I)}$$

(ii) Coefficient of restitution gives

$$e = -\left[\frac{v_2 - v_1}{u_2 - u_1}\right]$$

$$0.75 = -\left[\frac{v_2 - v_1}{1.8 - 0}\right]$$

$$v_1 - v_2 = 1.35 \qquad \text{... (II)}$$

Solving Eqs. (I) and (II), we get

$v_1 = v_A = 1.05$ m/s $(\leftarrow)$ and

$v_2 = v_B = -0.3$ m/s

$\therefore\ v_2 = v_B = 0.3$ m/s $(\rightarrow)$

(iii) By work - energy principle, we have

At position ② block spring will have maximum compression (x) and its velocity at that instant will become zero (i.e., $v_2 = 0$).

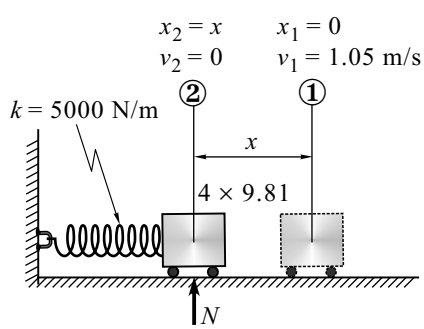

Fig. 15.32(c)

Work done = Change in kinetic energy

$$\frac{1}{2} \times 5000(0^2 - x^2) = 0 - \frac{1}{2} \times 4 \times 1.05^2$$

$x = 0.0297$ m (maximum compression of spring)

Solved Problems Based on Impulse and Momentum

Problem 33

A cannon gun is nested by three springs each of 250 kN/cm stiffness as shown in Fig. 15.33(a). The gun fires a 500 kg shell with a muzzle velocity of 1000 m/s. Calculate the total recoil and the maximum force developed in each spring if the gun has a mass of 80,000 kg.

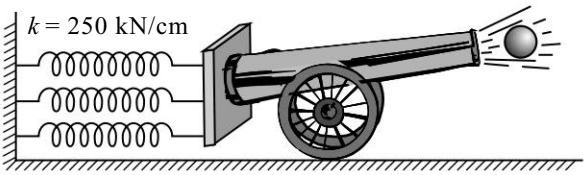

Fig. 15.33(a)

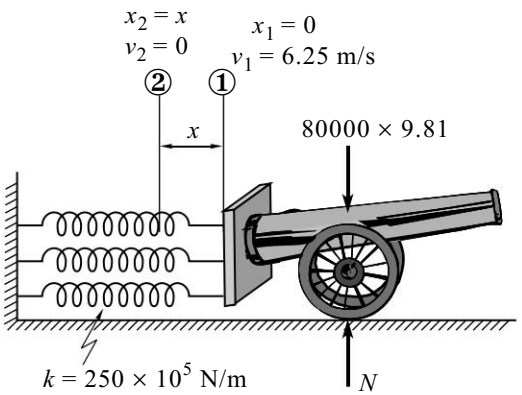

Fig. 15.33(b)

Solution

(i) By law of conservation of momentum, we have

Initial momentum = Final momentum

$0 = 500 \times 1000 + 80000 \times v_{gun}$

$v_{gun} = -6.25$ m/s

$\therefore\ v_{gun} = 6.25$ m/s (←)

(iii) By work - energy principle, we have

Work done = Change in kinetic energy

$$3\left[\frac{1}{2} \times 250 \times 10^5 (0^2 - x^2)\right] = 0 - \frac{1}{2} \times 80000 \times 6.25^2$$

$x = 0.204$ m (maximum compression of spring)

Spring force $F = kx$

$\therefore\ F = 250 \times 10^5 \times 0.204$

$\therefore\ F = 51.025 \times 10^5$ N

Problem 34

Figure 15.34(a) shows a block of weight $W = 10$ N sliding down from rest on a rough inclined plane. The coefficient of friction $\mu = 0.2$ and $\theta = 30^o$. Calculate **(i)** the impulse of the forces acting in the interval $t = 0$ to $t = 5$ s, **(ii)** the velocity at the end of 5 s, and **(iii)** distance covered by the block.

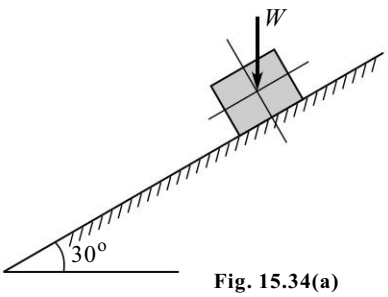

Fig. 15.34(a)

Solution

(i) Impulse = Net force × Time interval

Impulse = $(10 \sin 30^o - 0.2 \times 10 \cos 30^o) \times 5$

Impulse = 16.34 N-s

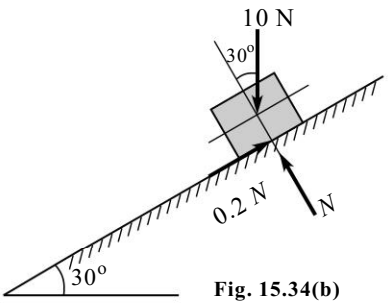

Fig. 15.34(b)

(ii) By impulse - momentum principle, we have

Impulse = Change in momentum

$$16.34 = \frac{10}{9.81}(v - 0)$$

$v = 16.03$ m/s $(30^o \swarrow)$

(iii) $d = \left(\frac{u+v}{2}\right) t$

$d = \frac{0 + 16.03}{2} \times 5$

$d = 40.075$ m

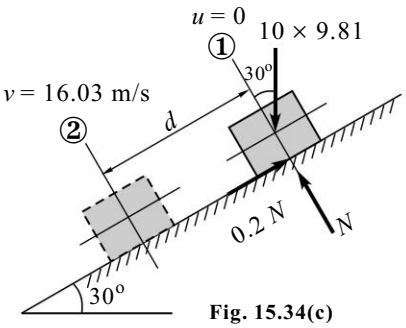

Fig. 15.34(c)

Problem 35

A ball of 110 g mass is moving towards a batsman with a velocity of 24 m/s as shown in Fig. 15.35(a). The batsman hits the ball by the bat, the ball attains a velocity of 36 m/s. If ball and bat are in contact for a period of 0.015 s, determine the average impulsive force exerted on the ball during the impact.

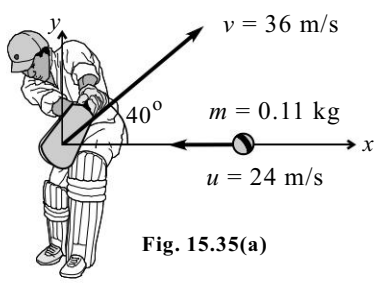

Fig. 15.35(a)

Solution

(i) Velocities before impact and after impact

$u_x = 24$ m/s $(\leftarrow)$

$u_y = 0$

$v_x = 36 \cos 40^o$ m/s $(\rightarrow)$

$v_y = 36 \sin 40^o$ m/s $(\uparrow)$

(ii) By impulse - momentum principle, we have

$F_x \times t = m\,(v_x - u_x)$

$F_x \times 0.015 = 0.11 \times [36 \cos 40^o - (-24)]$

$\therefore\ F_x = 378.24$ N $(\rightarrow)$

$F_y \times t = m\,(v_y - u_y)$

$F_y \times 0.015 = 0.11 \times [36 \sin 40^o - 0]$

$\therefore\ F_y = 169.7$ N $(\uparrow)$

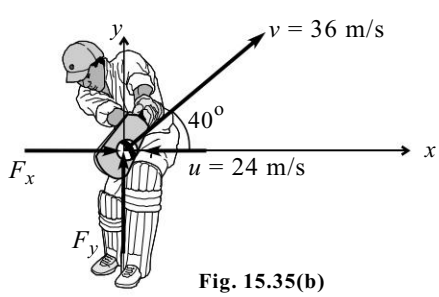

Fig. 15.35(b)

(iii) Resultant force exerted

$\tan\theta = \frac{F_y}{F_x} = \frac{169.7}{378.24}$

$\theta = 24.16^o$

$F = \sqrt{F_x^2 + F_y^2} = \sqrt{378.24^2 + 169.7^2}$

$F = 414.56$ N 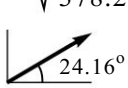

Problem 36

A boy of 60 kg mass and a girl of 50 kg mass dive off the end of a boat of mass 160 kg with a horizontal velocity of 2 m/s relative to the boat as shown in Fig. 15.36. Considering the boat to be initially at rest, find its velocity just after **(i)** both the boy and girls dive off simultaneously, and **(ii)** the boy dives first followed by the girl.

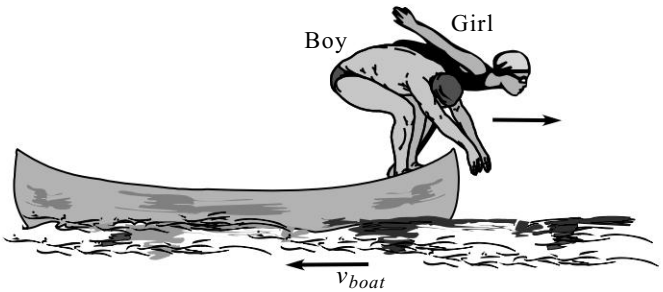

Fig. 15.36

Solution

(i) Both boy and girl dive off simultaneously

When boy and girl will jump together towards right the boat will move in opposite direction, i.e., towards left.

Here, velocity of boy and girl is 2 m/s relative to the boat.

$\therefore\ v_{boy/boat} = v_{boy} - v_{boat}$

$2 = v_{boy} - (-v_{boat})$

$v_{boy} = 2 - v_{boat}$

and $v_{girl/boat} = v_{girl} - v_{boat}$

$2 = v_{girl} - (-v_{boat})$

$v_{girl} = 2 - v_{boat}$

By conservation of momentum principle to the system of boy, girl and boat.

Initial momentum = Final momentum

$0 = (\text{mass} \times \text{velocity})_{boy} + (\text{mass} \times \text{velocity})_{girl} + (\text{mass} \times \text{velocity})_{boat}$

$0 = 60(2 - v_{boat}) + 50(2 - v_{boat}) + 160(-v_{boat})$

$0 = 120 - 60v_{boat} + 100 - 50v_{boat} - 160v_{boat}$

$-220 = -270v_{boat}$

$v_{boat} = 1.227$ m/s (←)

(ii) The boy dives first followed by the girl

Here, boy is jumping first and girl is still on boat.

By conservation of momentum principle,

Initial momentum = Final momentum

$0 = (\text{Mass} \times \text{Velocity})_{boy} + (\text{Mass} \times \text{Velocity})_{boat}$

$0 = 60(2 - v_{boat}) + 160(-v_{boat})$

$0 = 120 - 60v_{boat} - 160v_{boat}$

$-220v_{boat} = -120$

$v_{boat} = 0.5455$ m/s (←)

Later the girl jumps from the boat when the boat is moving back with a velocity of 0.5455 m/s.

By conservation of momentum principle.

Initial momentum = Final momentum

$(\text{mass} \times \text{velocity})_{boat} = (\text{mass} \times \text{velocity})_{girl} + (\text{mass} \times \text{velocity})_{boat}$

$160(-0.5455) = 50(2 - v_{boat}) + 160(-v_{boat})$

$-87.28 = 100 - 50v_{boat} - 160v_{boat}$

$-210v_{boat} = -187.28$

$v_{boat} = 0.8918 \text{ m/s } (\leftarrow)$

Problem 37

A boy having a mass of 60 kg and a girl having a mass of 50 kg stand motionless at the end of a boat which has a mass of 30 kg as shown in Fig. 15.37. If they exchange their positions, determine the final positions of boat. Neglect friction.

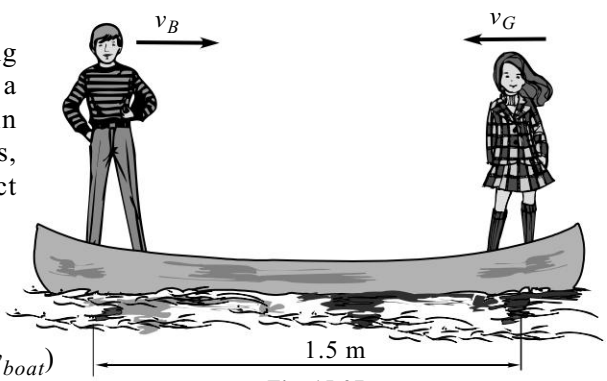

Fig. 15.37

Solution

Initial momentum = Final momentum

$0 = m_B v_B + m_G(-v_G) + (m_B + m_G + m_{boat})(v_{boat})$

$0 = 60 \times \left(\frac{1.5}{t}\right) - 50 \times \left(\frac{1.5}{t}\right) + (60 + 50 + 30) \times \left(\frac{x}{t}\right)$

$x = -0.107 \text{ m}$

$\therefore\ x = 0.107 \text{ m } (\leftarrow)$ (Backward displacement of boat)

Problem 38

A man of 70 kg mass is standing on one end of a boat of mass 300 kg and 5 m long as shown in Fig. 15.38. He walks from one end to the other end of the boat which is initially at rest. Find the displacement of the boat when the man reaches the other end.

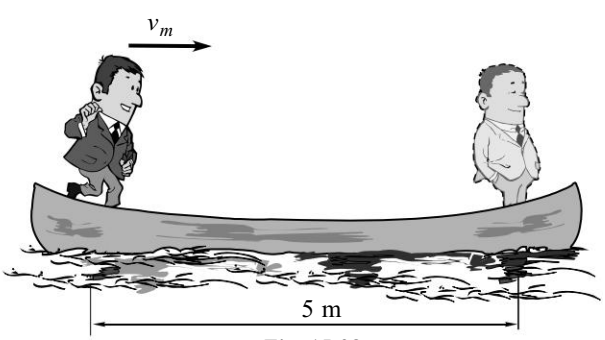

Fig. 15.38

Solution

Initial momentum = Final momentum

$0 = m_M v_M + (m_M + m_{boat})(v_{boat})$

$0 = 70 \times \left(\frac{5}{t}\right) + (70 + 300) \times \left(\frac{x}{t}\right)$

$x = -0.9459 \text{ m}$

$\therefore\ x = 0.9459 \text{ m } (\leftarrow)$ (Backward displacement of boat)

Problem 39

The boy jumps off the flat car at A with velocity v = 4 m/s relative to the car as shown in Fig. 15.39. If he lands the second flat car at B, determine the final speed of both cars after the motion. Each car has a mass of 80 kg. The boy's mass is 60 kg. Both cars are originally at rest.

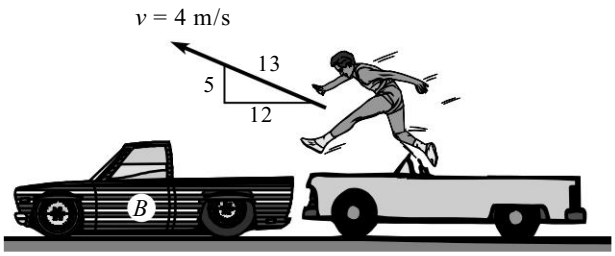

Fig. 15.39

Solution

(i) Consider the car A and boy initially at rest. When boy will jump to the left, car A will move to the right. Here velocity of boy (v = 4 m/s) is relative to the car.

$$\therefore \quad v_{boy/car\,A} = v_{boy} - v_{car\,A}$$

$$4 \cos \theta = v_{boy} - (-v_{car\,A})$$

$$v_{car\,A} = 4 \times \frac{12}{13} - v_{boy} \qquad \left[\because \cos \theta = \frac{12}{13}\right]$$

$$v_{boy} = 3.692 - v_{car\,A} \qquad \text{... (I)}$$

By principle of conservation of momentum, we have

Initial momentum = Final momentum

$$0 = (\text{Mass} \times \text{Velocity})_{boy} + (\text{Mass} \times \text{Velocity})_{car\,A}$$

$$0 = 60(3.692 - v_{car\,A}) + 80(-v_{car\,A})$$

$$0 = 221.52 - 60v_{car\,A} - 80v_{car\,A}$$

$$140v_{car\,A} = 221.52$$

$$v_{car\,A} = 1.582 \text{ m/s } (\rightarrow)$$

From Eq. (I)

$$v_{boy} = 3.692 - 1.582 = 2.11 \text{ m/s } (\leftarrow)$$

(ii) Consider the car B at rest and boy having velocity v_{boy} = 2.11 m/s ($\leftarrow$) before landing in car B. Later car B and boy in the car B will have common velocity.

Initial momentum = Final momentum

$$(\text{Mass} \times \text{Velocity})_{boy} + (\text{Mass} \times \text{Velocity})_{car\,B} = (\text{Mass} \times \text{Velocity})_{boy\,+\,car\,B}$$

$$60 \times 2.11 + 0 = (60 + 80)v_{boy\,+\,car\,B}$$

$$v_{boy\,+\,car\,B} = 0.9043 \text{ m/s } (\leftarrow)$$

$$\therefore \quad v_{car\,B} = 0.9043 \text{ m/s } (\leftarrow)$$

Problem 40

A particle of 1 kg mass is acted upon by a force F which varies as shown in Fig. 15.40(a). If initial velocity of the particle is 10 m/s determine **(i)** what is the maximum velocity attained by the particle, and **(ii)** the time when particle will be at point of reversal.

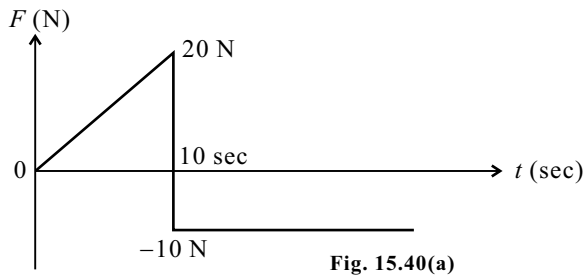

Fig. 15.40(a)

Solution

(i) For v_{max}

At force $F = 20$ N, the velocity of particle will be maximum.

$$\text{Change in velocity} = \frac{\text{Area under } F\text{-}t \text{ diagram}}{\text{Mass}}$$

$$v_{max} - 10 = \frac{\frac{1}{2} \times 10 \times 20}{1}$$

$$\therefore \; v_{max} = 110 \text{ m/s}$$

(ii) Let t be the time when particle will be at the point of reversal where velocity $v = 0$

$$\text{Change in velocity} = \frac{\text{Area under } F\text{-}t \text{ diagram}}{\text{Mass}}$$

$$0 - 10 = \frac{\frac{1}{2} \times 10 \times 20 - 10(t - 10)}{1}$$

$$-10 = 100 - 10t + 100 \Rightarrow 10t = 210$$

$$t = 21 \text{ sec}$$

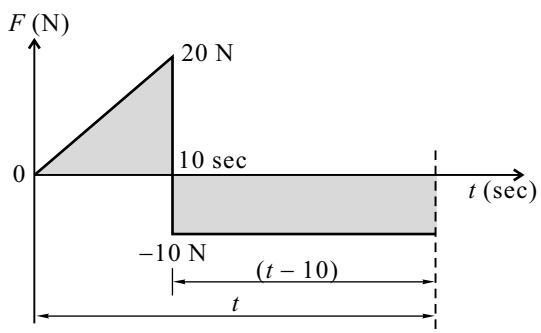

Fig. 15.40(b)

Problem 41

A body which is initially at rest, at the origin is subjected to a force varying with time as shown in Fig. 15.41(a). Find the time **(i)** when the body again comes to rest, and **(ii)** when it comes again to its original position.

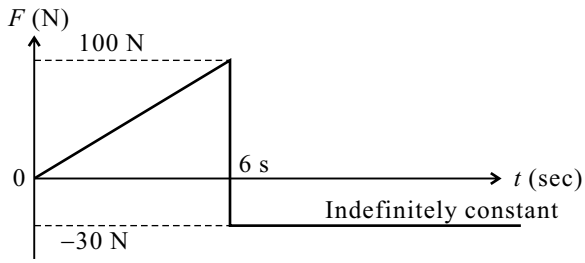

Fig. 15.41(a)

Solution

Let t be the time taken by the body to come to rest.

(i) $\int F\,dt = 0$

Area under F-t curve

$$\frac{1}{2} \times 6 \times 100 + (-30)(t - 6) = 0$$

$t = 16$ s

At $t = 16$ s, body will again come to rest.

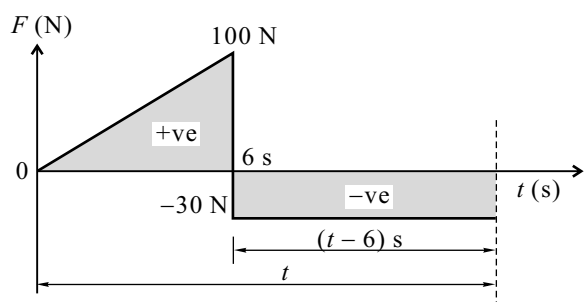

Fig. 15.41(b)

(ii) Let T be the time when body again comes to its original position (i.e., $s = 0$)

Displacement = Moment of area of F-t curve about P

$$0 = \left(\frac{1}{2} \times 6 \times 100\right)(T - 4) - 30(T - 6)\left(\frac{T - 6}{2}\right)$$

$T = 27.83$ s

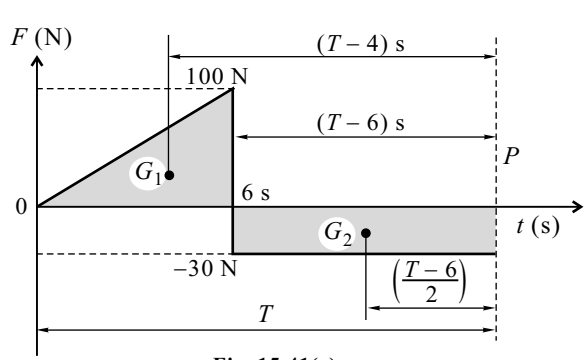

Fig. 15.41(c)

SUMMARY

- **Impulse Momentum Principle :** Impulse is equal to the change in momentum.

$$F\,\Delta t = mv_2 - mv_1$$

- **Impact :** Collision between two bodies is called impact.
- **Line of Impact :** The common normal to the surfaces of two bodies in contact during the impact is called line of impact. Line of impact is perpendicular to common tangent.
- **Central Impact :** When the mass centres of two colliding bodies lie on the line of impact, it is called central impact.
- **Eccentric Impact :** When the mass centres of two colliding bodies does not lie on the line of impact, it is called non-central or eccentric impact.
- **Direct Central Impact :** When the direction of motion of two colliding bodies is along the line of impact then we say it is direct central impact.
- **Oblique Central Impact :** When the direction of motion of two colliding bodies is not along the line of impact then we say it is oblique central impact.

Central Impact

Direct Central Impact | Oblique Central Impact

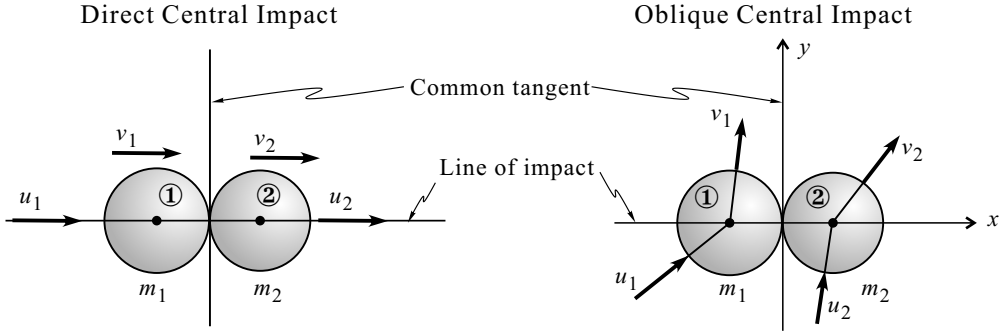

(i) $m_1u_1 + m_2u_2 = m_1v_1 + m_2v_2$

(ii) $e = -\left[\dfrac{v_2 - v_1}{u_2 - u_1}\right]$

(i) $m_1u_{1x} + m_2u_{2x} = m_1v_{1x} + m_2v_{2x}$

(ii) $e = -\left[\dfrac{v_{2x} - v_{1x}}{u_{2x} - u_{1x}}\right]$

} Relation along line of impact

(iii) $u_{1y} = v_{1y}$

(iv) $u_{2y} = v_{2y}$

} Relation along common tangent

EXERCISES

[I] Problems

Problems on Impulse and Momentum

1. A block of 50 kg mass resting on the horizontal surface is acted upon by a force F which varies as shown in Fig. 15.E1. If the coefficient of friction between the block and the surface is 0.2, find the velocity of the block at t = 5 s and 10 s. Also determine the time when the block will come to rest.

[***Ans.*** 15.19 m/s, 17.88 m/s and 19.11 s]

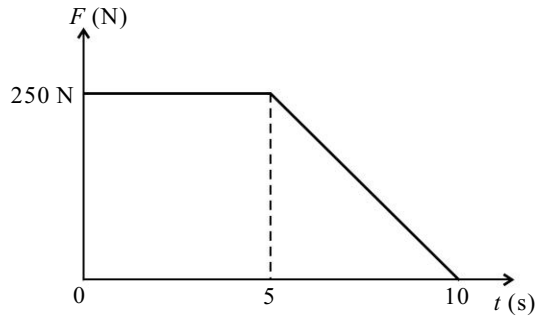

Fig. 15.E1

2. A 20 kg block shown in Fig. 15.E2 is originally at rest on a horizontal surface for which the coefficient of static friction is 0.6 and the coefficient of kinetic friction is 0.5. If the horizontal force F is applied such that it varies with the time as shown, determine the speed of the block in 10 s.

[***Ans.*** v = 31.7 m/s]

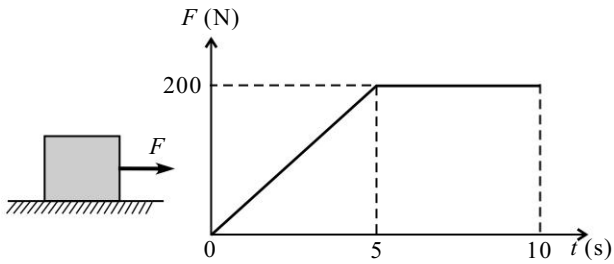

Fig. 15.E2

3. The cart is moving down the incline with a velocity v_0 = 20 m/s at t = 0, at which the force F begins to act as shown in Fig. 15.E3. After 5 s, the force continues at the 50 N level. Determine the velocity of the cart at time t = 8 s and calculate the time t at which the cart velocity is zero.

[***Ans.*** v_2 = 1.423 m/s (15°) and t = 8.25 s]

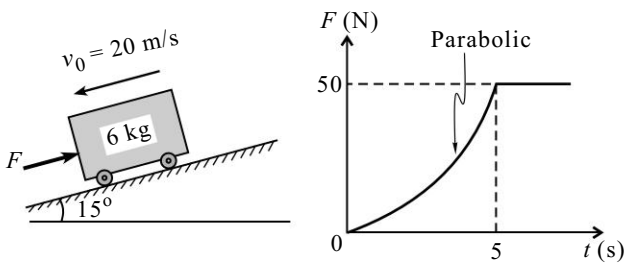

Fig. 15.E3

4. The 150 kg car A is coasting freely at 1.5 m/s on the horizontal track when it encounters a car B having a mass of 120 kg and coasting at 0.75 m/s towards it as shown in Fig. 15.E4. If the cars meet and couple together, determine the speed of both the cars just after the coupling.

[***Ans.*** 0.5 m/s]

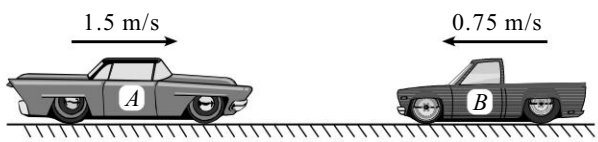

Fig. 15.E4

5. The loaded mine skip has a mass of 3000 kg as shown in Fig. 15.E5. The hoisting drum produces a tension T in the cable according to the time schedule shown. If the skip is at rest against A when the drum is activated, determine the speed v of the skip when t = 6 s. Friction loss may be neglected.

[**Hint :** Tension on block is $2T$, i.e., impulse by $T = 2$ (Area under the graph)]

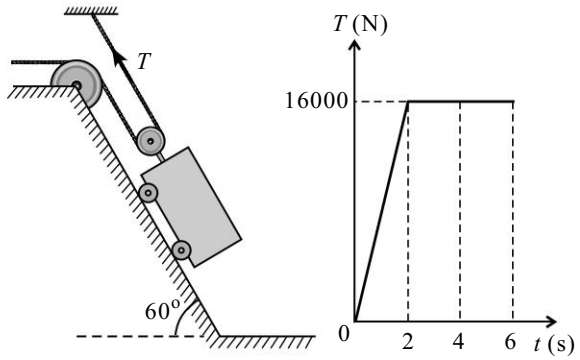

Fig. 15.E5

6. A 10 kg package drops from the chute into a 25 kg cart with a velocity of 3 m/s as shown in Fig. 15.E6. Knowing that the cart is initially at rest and can roll freely, determine **(a)** the final velocity of the cart, **(b)** the impulse exerted by the cart on the package, and **(c)** the percentage energy lost in the impact.

[***Ans.*** **(a)** 0.742 m/s **(b)** 23.86 N-s **(c)** 78.6 %]

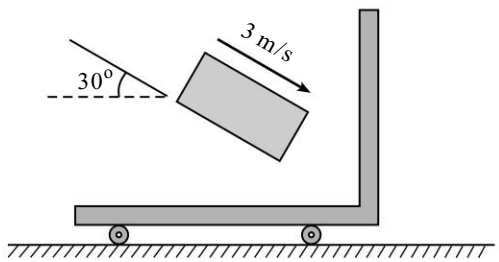

Fig. 15.E6

7. A 68 kg man sitting in a 79.8 kg canoe fires a gun, discharging a 57 g bullet into 45 kg sandbag suspended on a rope of 91 cm long on a bank of river as shown in Fig. 15.E7. It was calculated from the observation of the angle of the swing that the bag with the bullet embedded in it swings through a height of 30.5 mm. What is the velocity of the canoe?

[***Ans.*** 0.236 m/s (←)]

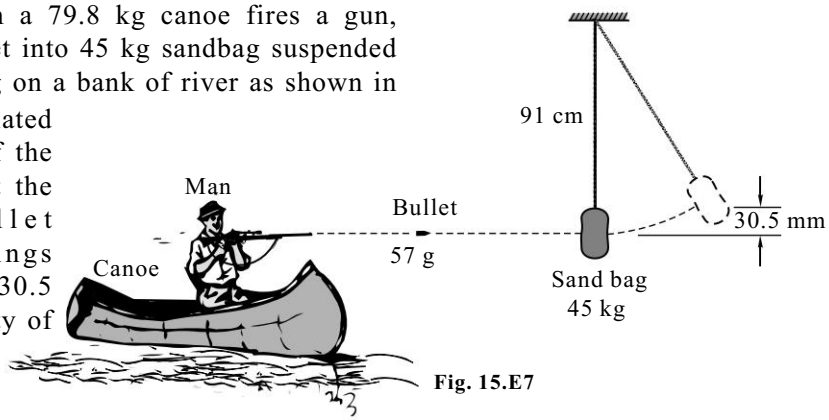

Fig. 15.E7

8. A 45 kg boy runs and jumps on his 10 kg sled with a horizontal velocity of 4.6 m/s as shown in Fig. 15.E8. If the sled and the boy coast 25 m on the level snow before coming to rest, compute the coefficient of kinetic friction μ_k between the snow and the runners of the sled.

[***Ans.*** $\mu_k = 0.029$]

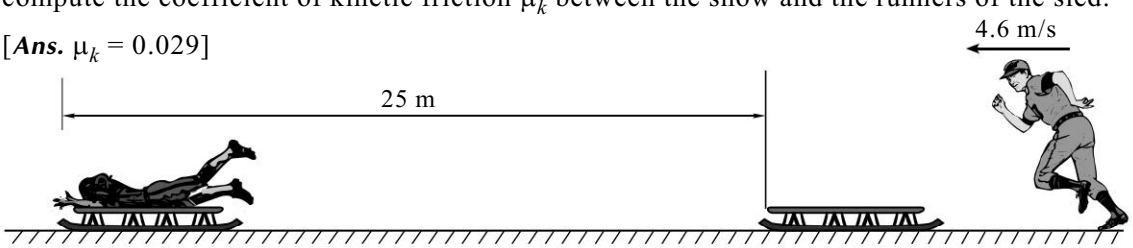

Fig. 15.E8

9. The man weights 750 N and jumps onto the boat which has a weight of 1000 N as shown in Fig. 15.E9. If he has a horizontal component of velocity relative to the boat of 0.9 m/s, just before he enters the boat, and the boat is travelling v_B = 0.6 m/s away from the pier when he makes the jump, determine the resulting velocity of the man and the boat.

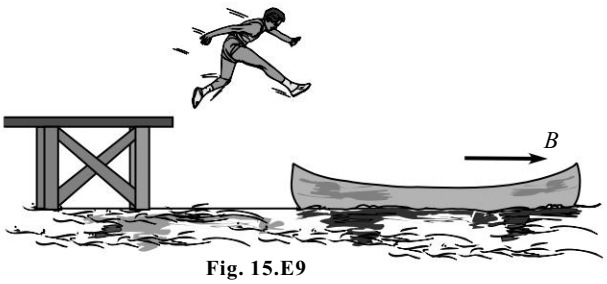

Fig. 15.E9

[***Ans.*** 0.986 m/s]

10. A man of 75 kg mass and a boy of 25 kg mass dive off the end of a boat of 200 kg mass so that their relative velocity with respect to the boat is 3 m/s. If initially the boat is at rest,, find velocity if **(a)** two dive of simultaneously, **(b)** the man dives first followed by boy, and **(c)** boy dives first followed by man.

[***Ans.*** **(a)** 1 m/s, **(b)** 1.08 m/s **(c)** 1.07 m/s]

11. A block having 50 kg mass rests on the surface of the cart having a mass of 75 kg as shown in Fig. 15.E11. If the spring, which is attached to the cart, and not the block, is compressed 0.2 m and the system is released from rest, determine **(a)** the speed of the block after the spring becomes undeformed, and **(b)** the speed of the block with respect to the cart after the spring becomes undeformed. Take k = 300 N/m.

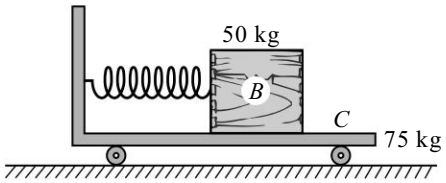

Fig. 15.E11

[***Ans.*** **(a)** 0.379 m/s **(b)** 0.632 m/s]

12. A spring normally 150 mm long is connected to the two masses as shown in Fig. 15.E12 and compressed 50 mm. If the system is released on a smooth horizontal plane, what will be the speed of each block when the spring again comes to its normal length? The spring constant is 2100 N/m.

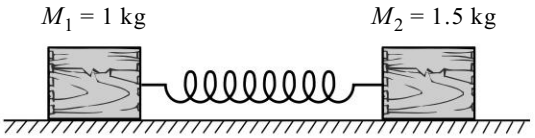

Fig. 15.E12

[***Ans.*** v_1 = 1.77 m/s (←) and v_2 = 1.18 m/s (→)]

13. A man of 500 N weight is standing in a boat of weight 2000 N. The boat is initially at rest. The man moves from end A to the right a distance equal to 2.4 m as shown in Fig. 15.E13 and stops. What is the corresponding displacement of boat? Neglect resistance of water. Assume uniform motion.

[***Ans.*** 0.48 m]

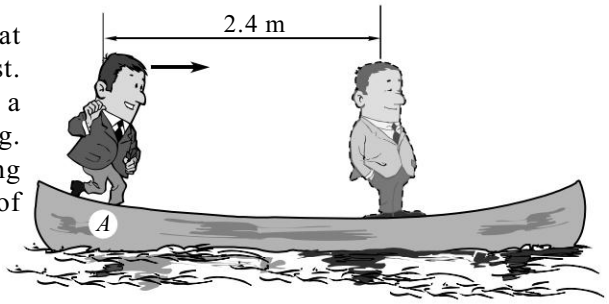

Fig. 15.E13

14. A rigid pile P shown in Fig. 15.E14 has a mass of 800 kg and is driven in to the ground using a hammer H that has a mass of 300 kg. The hammer falls from rest from a height of h = 0.5 m and strikes the top of the pile. Determine the impulse, which the hammer imparts on the pile, if the pile is surrounded entirely by loose sand so that after striking the hammer does not rebound off the pile.

[***Ans.*** 683 N-s]

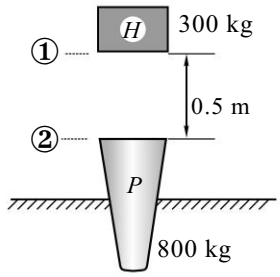

Fig. 15.E14

15. A shell of 200 N weight is fired from a gun with a velocity of 350 m/s as shown in Fig. 15.E15. The gun and its carriage have a total weight of 12 kN. Find the stiffness of each spring which is required, to bring the gun to a halt within 300 mm of the spring compression.

[***Ans.*** 115.63 N/m]

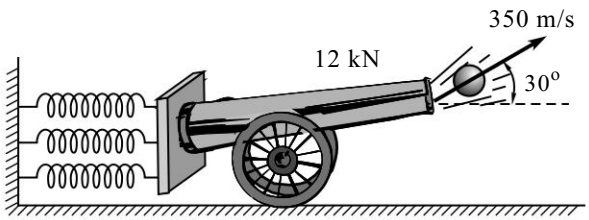

Fig. 15.E15

Problems on Impact

16. Two spheres A and B of 25 mm radius are travelling along the same straight path in the opposite direction. Sphere A of 1.2 kg mass is moving with 5 m/s towards right and sphere B of 2.4 kg mass is moving with a 2.5 m/s towards left. If the coefficient of restitution is 0.8, determine their final velocities.

[***Ans.*** v_1 = 4 m/s (←) and v_2 = 2 m/s (→)]

17. A 20 mg rail wagon moving at 0.5 m/s to the right collides with a 35 mg wagon at rest. If after the collision, the 35 mg wagon is observed to move to the right at 0.3 m/s, determine the value of e after impact.

[***Ans.*** e = 0.65]

18. A ball is dropped from a height of 9 m upon a horizontal slab. If it rebounds to a height of 5.76 m, show that the coefficient the restitution is 0.8.

19. A ball drops from the ceiling of a room and after rebounding twice from the floor reaches a height equal to one fourth of the height of the ceiling. Show that the coefficient of restitution is 0.707.

20. A smooth spherical ball A of 120 g mass is moving from left to right with 2 m/s in horizontal plane. Another identical ball B traveling in a perpendicular direction with a velocity of. 6 m/s collides with A as shown in Fig. 15.E20. Determine the velocity of the balls A and B after the impact. Assume e = 0.8.

[***Ans.*** v_A = 0.2 m/s (→) and
v_B = 6.26 m/s (∠73.3°)]

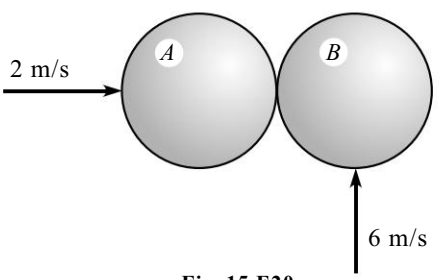

Fig. 15.E20

21. The magnitude and direction of the velocities of two identical frictionless balls before they strike each other is shown in Fig. 15.E21. Assume $e = 0.9$, determine the magnitude and direction of the velocity of each ball after the impact.

[***Ans.*** $v_A = 2.32$ m/s $\left(40.3^{\circ}\right)$ and $v_B = 4.19$ m/s $\left(55.6^{\circ}\right)$]

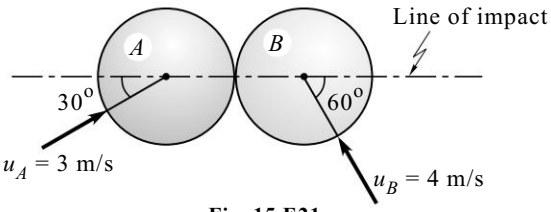

Fig. 15.E21

22. Two billiard balls of equal mass collide with velocities $u_1 = 1.5$ m/s and $u_2 = 2$ m/s as shown in Fig. 15.E22. Find velocity of balls after impact and percentage loss in K.E. Take $e = 0.9$.

[***Ans.*** $v_1 = 0.875$ m/s (←), $v_2 = 2.21$ m/s $\left(51.5^{\circ}\right)$
Percentage loss = 9.6 %]

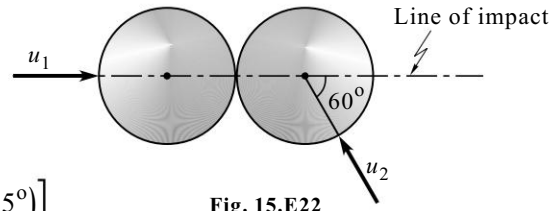

Fig. 15.E22

23. A ball is thrown downwards with a velocity of 12 m/s and at an angle of 30° with the horizontal from the top of the building 12 m high. Find where the ball will hit the ground the second time, if the coefficient of restitution between the ball and ground is 0.75.

[***Ans.*** 37.28 m]

24. Two smooth billiards balls A and B have an equal mass of $m = 0.2$ kg. If A strike B with a velocity of $v_A = 2$ m/s as shown in Fig. 15.E24, determine their final velocities just after collision. Ball B is originally at rest and the coefficient of restitution is $e = 0.75$.

[***Ans.*** $v_A = 1.3$ m/s $\left(81.6^{\circ}\right)$ and $v_B = 1.34$ m/s (←)]

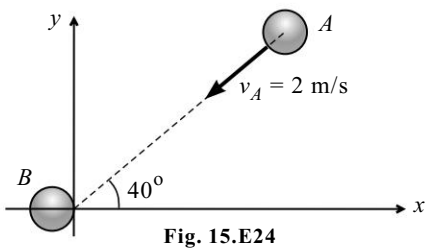

Fig. 15.E24

25. A ball is thrown against a frictionless wall. Its velocity before striking the wall is shown in Fig. 15.E25. Knowing $e = 0.9$. Determine the velocity after impact.

[***Ans.*** 9.26 m/s $\left(32.7^{\circ}\right)$]

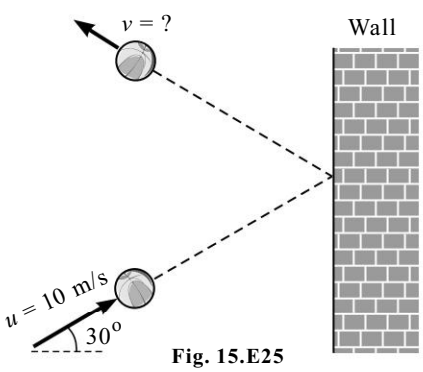

Fig. 15.E25

26. A 100 N ball shown in Fig. 15.E26 is released from the position shown by continuous line. It strikes a freely suspended 75 N ball. After impact, 75 N ball is raised by an angle $\theta = 48^o$. Determine the coefficient of restitution.

[***Ans.*** $e = 0.162$]

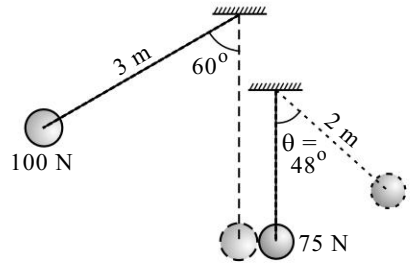

Fig. 15.E26

27. A 2 kg sphere A is released from rest when $\theta_A = 60^o$ as shown in Fig. 15.E27 and strike a sphere B of mass 4 kg which is at rest. If the impact is assumed to be perfectly elastic, determine the value of θ_B corresponding to highest position to which sphere B will rise.

[***Ans.*** $\theta_B = 38.94^o$]

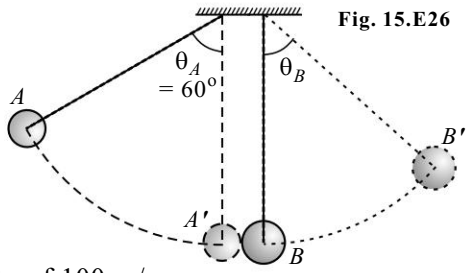

Fig. 15.E27

28. A bullet of 0.01 kg mass moving with a velocity of 100 m/s hits a 1 kg bob of a simple pendulum horizontally as shown in Fig. 15.E28. Find the maximum angle through which the pendulum swings when **(a)** the bullet gets embedded in the bob, **(b)** the bullet rebounds from surface of the bob with a velocity of 20 m/s, and **(c)** The bullet escapes from the other end of bob with a velocity of 20 m/s Given length of pendulum as 1 m. Take $g = 10$ m/s^2.

[***Ans.*** **(a)** $\theta = 18.01^o$, **(b)** $\theta = 21.87^o$ and **(c)** $\theta = 14.53^o$]

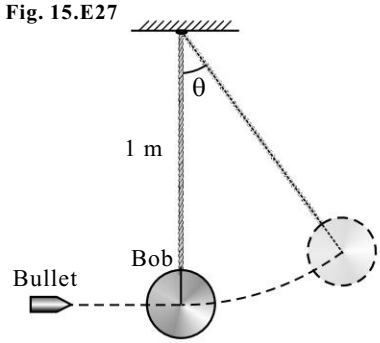

Fig. 15.E28

29. The bullet travelling horizontally with a velocity of 600 m/s and weighing 0.25 N strikes a wooden block weighing 50 N resting on a rough horizontal floor as shown in Fig. 15.E29. The $\mu_k = 0.5$, find the distance through which the block is displaced from its initial position. Assume bullet after striking remains buried in the block. [***Ans.*** 0.89 m]

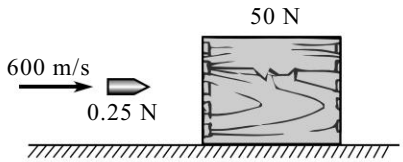

Fig. 15.E29

30. The bag A having a weight of 30 N is released from rest at a position $\theta = 0^o$ as shown in Fig. 15.E30. After falling $\theta = 90^o$ it strike a 90 N box B. If the coefficient of restitution between the bag and the box is $e = 0.5$. Determine **(a)** velocities of the bag and box just after impact, **(b)** maximum compression of the spring, **(c)** maximum and minimum tension in the cord after impact, and **(d)** loss of energy during collision.

[***Ans.*** **(a)** $v_A = 0.55$ m/s (→), $v_B = 1.66$ m/s (←), **(b)** $x = 0.5$ m, **(c)** 30.93 N; 29.54 N **(d)** 16.9 J]

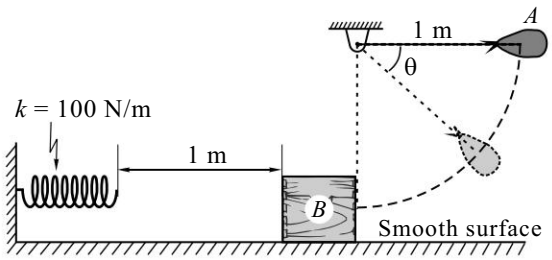

Fig. 15.E30

31. A 2 kg sphere is released from rest, when $\theta = 60^o$. It strikes 2.5 kg block B which is at rest as shown in Fig. 15.E31. The velocity of the sphere is zero after impact. Block moves through a distance of 1.5 m before coming to rest. Find **(a)** the coefficient of restitution, and **(b)** coefficient of friction.

[***Ans.*** **(a)** $e = 0.8$ **(b)** $\mu_k = 0.256$]

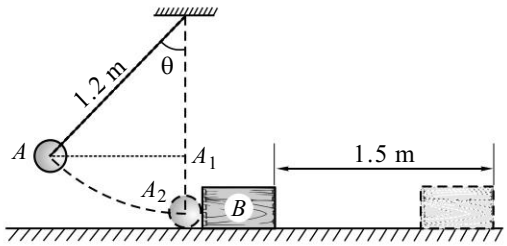

Fig. 15.E31

32. A 2 kg sphere A is moving to the left with a velocity of 15 m/s when it strikes the vertical face of a 4 kg block, which is at rest. The block B is supported on rollers and is attached to spring of constant K = 5000 N/m as shown in Fig. 15.E32. If coefficient of restitution for the block and the sphere e = 0.75, determine the maximum compression (shortening) of the spring due to the impact. Neglect friction.

[***Ans.*** 0.2475 m]

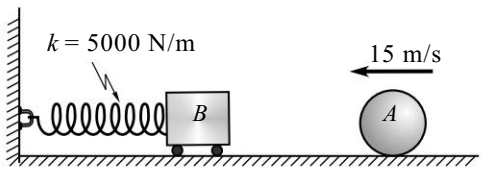

Fig. 15.E32

33. A 30 kg block is dropped from a height of 2 m on to the 10 kg pan of a spring scale. Assuming the impact to be perfectly plastic, determine the maximum deflection of the pan. K = 20 kN/m.

[***Ans.*** 225 mm]

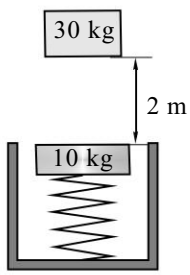

Fig. 15.E33

34. A 1 kg ball transverses a frictionless tube as shown. Falling through a height of 1.5 m it then strikes a 2 kg ball hung on a 1.5 m long rope. Determine the height to which the hung ball will rise if **(a)** the collision is perfectly elastic, and **(b)** the coefficient of restitution is 0.7.

[***Ans.*** **(a)** 0.666 m **(b)** 0.481 m]

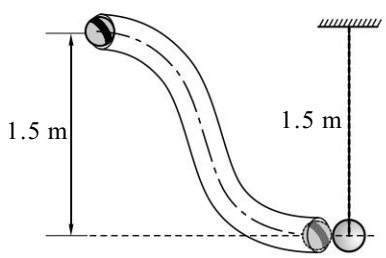

Fig. 15.E34

35. A 600 g block rests on the edge of a table, as shown in Fig. 15.E35. A second block, weighing 400 g and moving with velocity u_A, strikes the first block and causes the trajectory shown in the figure. The impact is assumed to be "nearly elastic" with an assumed value of the coefficient of restitution of 0.95. Find the initial velocity u_A and the final velocity v_A of the striking block.

[***Ans.*** u_A = 7.26 m/s (→) and v_A = 1.23 m/s (←)]

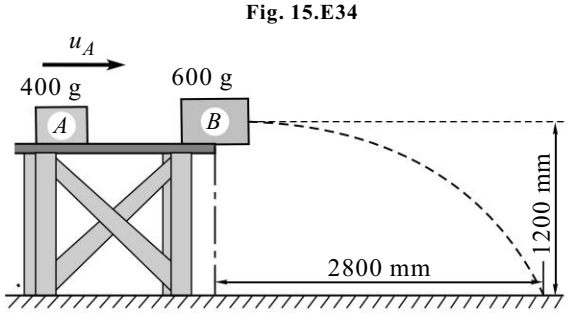

Fig. 15.E35

[II] Review Questions

1. What is impulsive force?
2. State and derive the impulse momentum principle.
3. State the principle of conservation of momentum.
4. Explain the following terms:

   (a) Impulse **(b)** Line of impact **(c)** Central impact
   (d) Non-central impact **(e)** Direct central impact **(f)** Oblique central impact
   (g) Coefficient of restitution

[III] Fill in the Blanks

1. The product of mass and velocity is termed as _____.
2. Phenomenon of collision of two bodies, which occurs for a very small interval of time and during which two bodies exert very large force on each other, is called _____.
3. Line of impact is perpendicular to the _____.
4. If mass centres lies along the line of impact then such impact is called _____ impact.
5. Rebound stroke of a carom board is the example of _____ central impact.
6. The ratio of velocity of separation to velocity of approach is called _____.
7. For a perfectly plastic impact, value of e is equal to _____.

[IV] Multiple-choice Questions

Select the appropriate answer from the given options.

1. When a large force acts over a small finite period the force is called a/an _____ force.

   (a) impulse **(b)** frictional **(c)** resultant **(d)** equilibrant

2. When the impulsive forces acts for a very small interval of time, impulse due to external forces is _____.

   (a) large **(b)** small **(c)** zero **(d)** infinite

3. If a man jumps off a boat, the action of the man is equal and opposite to the reaction of the boat. Hence the _____ is zero in the system.

   (a) impulse **(b)** resultant **(c)** equilibrant **(d)** impact

4. The common normal to the surface of two bodies in contact during the impact is called as _____.

   (a) line of impact **(b)** common tangent **(c)** central impact **(d)** oblique impact

5. The relation total momentum is conserved before and after impact is always along _____.

   (a) common tangent **(b)** line of impact **(c)** vertical **(d)** horizontal

6. In a perfectly plastic impact after impact both the bodies move _____.

   (a) separately **(b)** tangentially **(c)** together **(d)** horizontally

APPENDIX

IMPORTANT FORMULAE AND RESULTS

[A] Algebra

1. $a^0 = 1$; $x^0 = 1$

(Anything raised to the power zero is one)

2. $x^m \times x^n = x^{m+n}$

(If the bases are same in multiplication, the powers are added)

3. $\dfrac{x^m}{x^n} = x^{m-n}$

(If the bases are same in division, the powers are subtracted)

4. If $ax^2 + bx + c = 0$

then $x = \dfrac{-b \pm \sqrt{b^2 - bac}}{2a}$

where a is the coefficient of x^2, b is the coefficient of x and c is the constant term.

[B] Trigonometry

1. In a right-angled triangle ABC

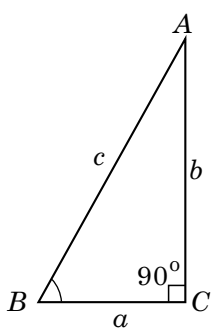

(a) $\dfrac{b}{c} = \sin\theta$ **(b)** $\dfrac{a}{c} = \cos\theta$ **(c)** $\dfrac{b}{a} = \dfrac{\sin\theta}{\cos\theta} = \tan\theta$

(d) $\dfrac{c}{b} = \dfrac{1}{\sin\theta} = \text{cosec}\,\theta$ **(e)** $\dfrac{c}{a} = \dfrac{1}{\cos\theta} = \sec\theta$

(f) $\dfrac{a}{b} = \dfrac{\cos\theta}{\sin\theta} = \dfrac{1}{\tan\theta} = \cot\theta$

2. Table of Trigonometric Ratios

Angle	0°	$(\pi/6)$ 30°	$(\pi/4)$ 45°	$(\pi/3)$ 60°	$(\pi/2)$ 90°	(π) 180°
sin	0	$\frac{1}{2}$	$\frac{1}{\sqrt{2}}$	$\frac{\sqrt{3}}{2}$	1	0
cos	1	$\frac{\sqrt{3}}{2}$	$\frac{1}{\sqrt{2}}$	$\frac{1}{2}$	0	–1
tan	0	$\frac{1}{\sqrt{3}}$	1	$\sqrt{3}$	∞	0
cot	∞	$\sqrt{3}$	1	$\frac{1}{\sqrt{3}}$	0	0
sec	1	$\frac{2}{\sqrt{3}}$	$\sqrt{2}$	2	∞	–1
cosec	∞	2	$\sqrt{2}$	$\frac{2}{\sqrt{3}}$	1	–1

3. Rules for Change of Trigonometrical Ratios

(a)

$\sin(-\theta) = -\sin\theta$
$\cos(-\theta) = \cos\theta$
$\tan(-\theta) = -\tan\theta$
$\cot(-\theta) = -\cot\theta$
$\sec(-\theta) = \sec\theta$
$\text{cosec}(-\theta) = -\text{cosec}\,\theta$

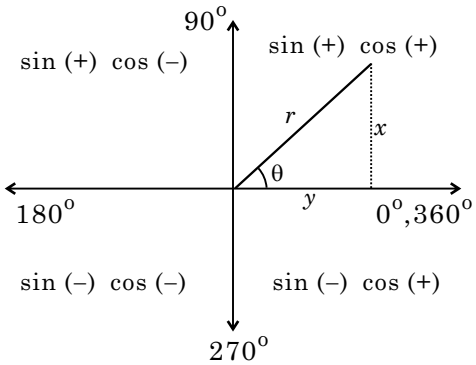

$r = \sqrt{x^2 + y^2}$

$\theta = \tan^{-1}\left(\frac{y}{x}\right)$

(b)

$\sin(90^\circ - \theta) = \cos\theta$
$\cos(90^\circ - \theta) = \sin\theta$
$\tan(90^\circ - \theta) = \cot\theta$
$\cot(90^\circ - \theta) = \tan\theta$
$\sec(90^\circ - \theta) = \text{cosec}\,\theta$
$\text{cosec}(90^\circ - \theta) = \sec\theta$

(c)

$\sin(90^\circ + \theta) = \cos\theta$
$\cos(90^\circ + \theta) = -\sin\theta$
$\tan(90^\circ + \theta) = -\cot\theta$
$\cot(90^\circ + \theta) = -\tan\theta$
$\sec(90^\circ + \theta) = -\text{cosec}\,\theta$
$\text{cosec}(90^\circ + \theta) = \sec\theta$

(d)

$\sin(180^\circ - \theta) = \sin\theta$
$\cos(180^\circ - \theta) = -\cos\theta$
$\tan(180^\circ - \theta) = -\tan\theta$
$\cot(180^\circ - \theta) = -\cot\theta$
$\sec(180^\circ - \theta) = -\sec\theta$
$\text{cosec}(180^\circ - \theta) = \text{cosec}\,\theta$

(e)

$\sin(180^\circ + \theta) = -\sin\theta$
$\cos(180^\circ + \theta) = -\cos\theta$
$\tan(180^\circ + \theta) = \tan\theta$
$\cot(180^\circ + \theta) = -\cot\theta$
$\sec(180^\circ + \theta) = -\sec\theta$
$\text{cosec}(180^\circ + \theta) = -\text{cosec}\,\theta$

4. Trigonometric Ratios of the Sum and Difference of Two Angles

In any triangle ABC

$$\frac{a}{\sin A} = \frac{b}{\sin B} = \frac{c}{\sin C}$$

where a, b, and c are the lengths of the three sides of a triangle. A, B and C are opposite angles of the sides a, b and c respectively.

(a) $\sin(A + B) = \sin A \cos B + \cos A \sin B$

(b) $\sin(A - B) = \sin A \cos B - \cos A \sin B$

(c) $\cos(A + B) = \cos A \cos B - \sin A \sin B$

(d) $\cos(A - B) = \cos A \cos B + \sin A \sin B$

(e) $\tan(A+B) = \dfrac{\tan A + \tan B}{1 - \tan A \,.\, \tan B}$ **(f)** $\tan(A-B) = \dfrac{\tan A - \tan B}{1 - \tan A \,.\, \tan B}$

(g) $2\cos A \sin B = \sin(A+B) - \sin(A-B)$

(h) $\sin 2\theta = 2\sin\theta\cos\theta$ **(i)** $\sin^2\theta + \cos^2\theta = 1$

(j) $\sin^2\theta = \dfrac{1-\cos 2\theta}{2}$ **(k)** $\cos^2\theta = \dfrac{1+\cos 2\theta}{2}$

(l) $1 + \tan^2\theta = \sec^2\theta$ **(m)** $1 + \cot^2\theta = \operatorname{cosec}^2\theta$

[C] Differential Calculus

1. $\dfrac{d}{dx}$ is the sign of differentiation

2. $\dfrac{d}{dx}(x)^n = nx^{n-1}$, e.g., $\dfrac{d}{dx}(x)^6 = 6x^5$, $\dfrac{d}{dx}(x) = 1$

(To differentiate any power of x, write the power before x and subtract one from the power)

3. $\dfrac{d}{dx}(C) = 0$, e.g., $\dfrac{d}{dx}(5)^n = 0$

(Differential coefficient of a constant is zero)

4. $\dfrac{d}{dx}(u.v) = u.\dfrac{dv}{dx} + v.\dfrac{du}{dx}$

$$\begin{bmatrix}\text{Differential}\\ \text{coefficient of}\\ \text{product of any}\\ \text{two functions}\end{bmatrix} = \begin{bmatrix}(1^{\text{st}}\text{ function} \times \text{Differential coefficient of second function})\\ + (2^{\text{nd}}\text{ function} \times \text{Differential coefficient of second function})\end{bmatrix}$$

5. $\dfrac{d}{dx}\left(\dfrac{u}{v}\right) = \dfrac{v.\dfrac{du}{dx} - u.\dfrac{dv}{dx}}{v^2}$

$$\begin{bmatrix}\text{Differential}\\ \text{coefficient of two}\\ \text{functions when}\\ \text{one is divided by}\\ \text{the other}\end{bmatrix} = \begin{bmatrix}\dfrac{(\text{Denominator} \times \text{Differential coefficient of numerator})\\ - (\text{Numerator} \times \text{Differential coefficient of denominator})}{\text{Square of denominator}}\end{bmatrix}$$

6. Differential coefficients of trigonometrical functions

(a) $\dfrac{d}{dx}2(\sin x) = \cos x$; $\dfrac{d}{dx}(\cos x) = -\sin x$

(b) $\dfrac{d}{dx}(\tan x) = \sec^2 x$; $\dfrac{d}{dx}(\cot x) = -\operatorname{cosec}^2 x$

(c) $\frac{d}{dx}(\sec x) = \sec x \,.\, \tan x$; $\frac{d}{dx}(\text{cosec } x) = -\text{cosec } x \,.\, \cot x$

(The differential coefficient whose trigonometrical function begins with co, is negative)

7. If the differential coefficient of a function is zero, the function is either maximum or minimum. Conversely, if the maximum or minimum value of a function is required, then differentiate the function and equate it to zero.

[D] Integral Calculus

1. $\int dx$ is the sign of integration

2. $\int x^n \, dx = \frac{x^{n+1}}{n+1}$, e.g., $\int x^8 = \frac{x^9}{9}$

(To integrate any power of x, add one to the power and divide by the new power)

3. $\int C \, dx = Cx$, e.g., $\int 5 \, dx = 5x$

(To integrate any constant, multiply the constant by x)

4. $\int (ax+b)^n \, dx = \frac{(ax+b)^{n+1}}{(n+1) \times a}$

(To integrate any bracket with power, add one to the power and divide by the new power and also divide by the coefficient of x within the bracket.)

[E] Scalar Quantities

The scalar quantities (or sometimes known as scalars) are those quantities which have magnitude only such as length, mass, time, distance, volume, density, temperature, speed, etc.

[F] Vector Quantities

The vector quantities (or sometimes known as vectors) are those quantities which have magnitude and direction such as force, displacement, velocity, acceleration, momentum, etc.

Important features of vector quantities :

Equal Vector : Two vectors are said to be equal if they have the same magnitude and direction.

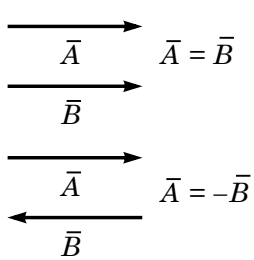

Negative Vector : A negative vector is defined as another vector having the same length but drawn in opposite direction.

Zero (or Null) Vector : A vector having zero magnitude is called a zero (or null) vector, it has arbitrary direction.

Unit Vector : A vector whose magnitude is unity, is known as unit vector.

[G] SI Units Used in Mechanics

Sr.	Quantity	Unit	SI Symbol
	(Base Units)		
1.	Length	meter (or *metre*)	m
2.	Mass	kilogram	kg
3.	Time	second	s
	(Derived Units)		
4.	Acceleration, linear	metre/second^2	m/s^2
5.	Acceleration, angular	radian/second^2	rad/s^2
6.	Area	metre^2	m^2
7.	Density	kilogram/metre^3	kg/m^3
8.	Force	newton	N (= kg·m/s^2)
9.	Frequency	hertz	Hz (= 1/s)
10.	Impulse, linear	newton-second	N·s
11.	Impulse, angular	newton-metre-second	N·m·s
12.	Moment of force	newton-metre	N·m
13.	Moment of inertia, area	metre^4	m^4
14.	Moment of inertia, mass	kilogram-metre^2	kg·m^2
15.	Momentum, linear	kilogram-metre/second	kg·m/s (= N·s)
16.	Momentum, angular	kilogram-metre^2/second	kg·m^2/s (= N·m·s)
17.	Power	watt	W (= J/s = N·m/s)
18.	Pressure, stress	pascal	Pa (= N'm/m^2)
19.	Product of inertia, area	metre^4	m^4
20.	Product of inertia, mass	kilogram-metre^2	kg·m^2
21.	Spring constant	newton/metre	N/m
22.	Velocity, linear	metre/second	m/s
23.	Velocity, angular	radian/second	rad/s
24.	Volume	metre^3	m^3
25.	Work, energy	joule	J (= N·m)
	(Supplementary and Other Acceptable Units)		
26.	Distance (navigation)	nautical mile	(= 1.852 km)
27.	Mass	ton (metric)	t (= 1000 kg)
28.	Plane angle	degrees (decimal)/radian	^{o} / -
29.	Speed	knot	(= 1.852 km/h)
30.	Time	minute/hour/day	min/h/d

[H] SI Unit Prefixes

Multiplication Factor	Standard Form	Prefix	Symbol
1,000,000,000,000	10^{12}	tera	T
1,000,000,000	10^{9}	giga	G
1,000,000	10^{6}	mega	M
1,000	10^{3}	kilo	k
100	10^{2}	hecta	h
10	10	deca	da
0.1	10^{-1}	deci	d
0.01	10^{-2}	centi	c
0.001	10^{-3}	milli	m
0.000,001	10^{-6}	micro	μ
0.000,000,001	10^{-9}	nano	n
0.000,000,000,001	10^{-12}	pico	p

[I] Conversion Factors

Length	Area	Pressure
1 inch = 2.54 cm	1 sq.m = 10.761 sq.ft	1 psi = 1 lb/sq.inch
1 cm = 0.3937 inch	1 sq.ft = 0.0929 sq.m	= 0.0703 kg/cm^3
1 mm = 1000 microns	1 sq.mile = 2.59 sq.km	1 kg/cm^3 = 14.22 psi
1 meter = 3.281 feet	= 258.90 hectare	1 lb/sq.ft = 4.882 kg/m^2
1 foot = 0.3048 meter	= 640 acres	1 kg/m^2 = 0.205 lb/ft^2
1 mile = 1.6098 km	1 hectare = 10^4 sq.m	1 kg/sq.cm = 10 m head of water
	= 2.47 acres	1 psi = 0.0681 atmosphere
		= 2.04 inches head of mercury
		1 Pascal = 1 N/m^2
		1 MPa = 1 N/mm^2

[J] Maxima and Minima

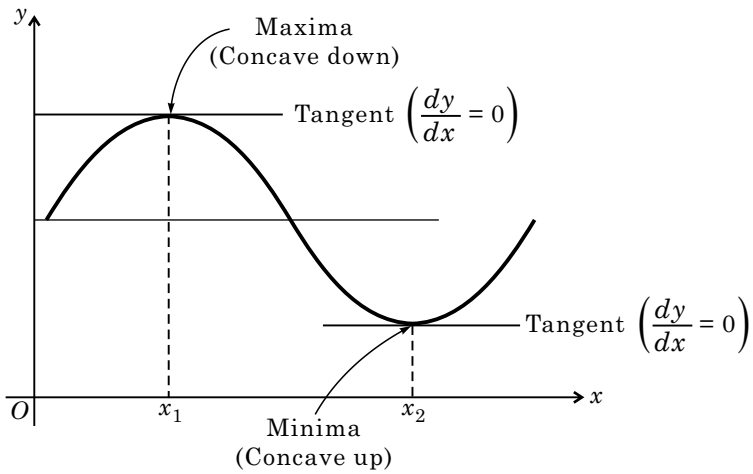

Suppose quantity y depends on another quantity x in a manner shown in figure. It becomes maximum at x_1 and minimum at x_2. At these points, the tangent to the curve is parallel to the x-axis and hence its slope is 0.

But the slope of the curve $y = f(x)$ equals the rate of change $\frac{dy}{dx}$.

Thus, at a maximum or at a minimum $\frac{dy}{dx} = 0$. Just before the maximum, the slope is positive, at maximum it is zero and just after the maximum it is negative.

Thus, $\frac{dy}{dx}$ decreases at a maximum and hence the rate of change of $\frac{dy}{dx}$ is negative at a maximum, i.e., $\frac{d}{dx}\left(\frac{dy}{dx}\right) < 0$ at a maximum. The quantity $\frac{d}{dx}\left(\frac{dy}{dx}\right)$ is the rate of change of the slope. It is written as $\frac{d^2y}{dx^2}$.

Thus, the **condition of a maximum** is $\frac{dy}{dx} = 0$ and $\frac{d^2y}{dx^2} < 0$.

Similarly, at a minimum the slope changes from negative to positive.

The slope increases at such a point and hence $\frac{d}{dx}\left(\frac{dy}{dx}\right) > 0$

Thus, the **condition of a minimum** is $\frac{dy}{dx} = 0$ and $\frac{d^2y}{dx^2} > 0$.

Quite often it is known from the physical situation whether the quantity is a maximum or a minimum. The test on $\frac{d^2y}{dx^2}$ may be omitted.

ANSWER TO OBJECTIVE TYPE QUESTIONS

Chapter 1

[III] Fill in the Blanks

(1) space **(2)** time **(3)** mass **(4)** scalar **(5)** particle

[IV] Multiple-choice Questions

(1) - (a) **(2)** - (d) **(3)** - (c) **(4)** - (c) **(5)** - (b) **(6)** - (d) **(7)** - (b) **(8)** - (c) **(9)** - (c) **(10)** - (d)

Chapter 2

[III] Fill in the Blanks

(1) resultant and equilibrant **(2)** like, unlike **(3)** positive, negative **(4)** single
(5) couple, equilibrium

[IV] Multiple-choice Questions

(1) - (b) **(2)** - (a) **(3)** - (d) **(4)** - (b) **(5)** - (c) **(6)** - (d) **(7)** - (a) **(8)** - (c) **(9)** - (c)

Chapter 3

[III] Fill in the Blanks

(1) equal, opposite **(2)** equal, opposite
(3) uniformly distributed load, uniformly varying load **(4)** built-in **(5)** away

[IV] Multiple-choice Questions

(1) - (c) **(2)** - (d) **(3)** - (b) **(4)** - (c) **(5)** - (c) **(6)** - (c) **(7)** - (d) **(8)** - (d) **(9)** - (b) **(10)** - (a)

Chapter 4

[III] Fill in the Blanks

(1) 1 **(2)** dot **(3)** 0 **(4)** Varignon's **(5)** not

[IV] Multiple-choice Questions

(1) - (d) **(2)** - (d) **(3)** - (a) **(4)** - (b) **(5)** - (c) **(6)** - (b) **(7)** - (d)

Chapter 5

[III] Fill in the Blanks

(1) centre of gravity **(2)** centroid **(3)** $\frac{s}{2\sqrt{3}}$ **(4)** 0 **(5)** $\frac{4r}{3\pi}$

[IV] Multiple-choice Questions

(1) - (d) **(2)** - (c) **(3)** - (d) **(4)** - (c) **(5)** - (a)

Chapter 6

[III] Fill in the Blanks

(1) joint **(2)** tension, compression **(3)** perfect **(4)** determinate **(5)** joint

[IV] Multiple-choice Questions

(1) - (c) **(2)** - (b) **(3)** - (c) **(4)** - (a) **(5)** - (b) **(6)** - (b) **(7)** - (a)

Chapter 7

[III] Fill in the Blanks

(1) small **(2)** cone of friction **(3)** angle of repose

[IV] Multiple-choice Questions

(1) - (c) **(2)** - (d) **(3)** - (c) **(4)** - (a) **(5)** - (b) **(6)** - (a) **(7)** - (c)

Chapter 8

[III] Fill in the Blanks

(1) positive **(2)** opposite **(3)** zero **(4)** same **(5)** negative

[IV] Multiple-choice Questions

(1) - (c) **(2)** - (a) **(3)** - (b) **(4)** - (d)

Chapter 10

[III] Fill in the Blanks

(1) position **(2)** translation **(3)** rotational **(4)** Position **(5)** speed **(6)** displacement

[IV] Multiple-choice Questions

(1) - (a) **(2)** - (d) **(3)** - (c) **(4)** - (c) **(5)** - (c)

Chapter 11

[III] Fill in the Blanks

(1) curvilinear **(2)** rectilinear **(3)** centripetal **(4)** speed **(5)** 0 **(6)** parabolic
(7) horizontal and vertical

[IV] Multiple-choice Questions

(1) - (a) **(2)** - (b) **(3)** - (c) **(4)** - (b) **(5)** - (d) **(6)** - (a)

Chapter 12

[III] Fill in the Blanks

(1) rectilinear **(2)** same **(3)** velocity **(4)** translation and rotational
(5) instantaneous centre of rotation

[IV] Multiple-choice Questions

(1) - (a) **(2)** - (b) **(3)** - (c) **(4)** - (d)

Chapter 13

[III] Fill in the Blanks

(1) matter **(2)** Mass **(3)** momentum **(4)** inertia **(5)** zero

[IV] Multiple-choice Questions

(1) - (d) **(2)** - (c) **(3)** - (a) **(4)** - (b) **(5)** - (c)

Chapter 14

[III] Fill in the Blanks

(1) negative **(2)** scalar **(3)** negative **(4)** kinetic energy **(5)** negative

[IV] Multiple-choice Questions

(1) - (c) **(2)** - (a) **(3)** - (b) **(4)** - (d)

Chapter 15

[III] Fill in the Blanks

(1) momentum **(2)** impact **(3)** common tangent **(4)** central **(5)** oblique
(6) coefficient of restitution **(7)** zero

[IV] Multiple-choice Questions

(1) - (a) **(2)** - (c) **(3)** - (b) **(4)** - (a) **(5)** - (b) **(6)** - (c)

University Paper Solutions

ENGINEERING MECHANICS

F.E. SEMESTER - I

(Revised Course)

DECEMBER - 2012

Total Marks : 80
(3 Hours)

- Question No. **1** is **compulsory**.
- Attempt any **three** questions from remaining **five** questions.
- Figure to the **right** of the question paper indicate **full** marks.
- Assume acceleration due to gravity value $g = 9.81$ m/s^2.
- Assume **suitable** data wherever **necessary**.
- Answers to sub-questions should be grouped together.

1. (a) Find the resultant of the force system shown in Fig. 1(a). **[04]**

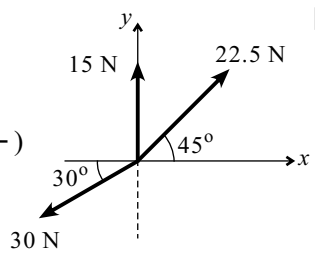

Fig. 1(a)

Solution

(i) $\Sigma F_x = 22.5 \cos 45° - 30 \cos 30° = -10.07 \text{ N} = 10.07 \text{ N} (\leftarrow)$

(ii) $\Sigma F_y = 15 + 22.5 \sin 45° - 30 \sin 30° = 15.90 \text{ N} (\downarrow)$

(iii) $R = \sqrt{(10.07)^2 + (15.90)^2} = 18.82 \text{ kN}$ ***Ans.***

(iv) $\theta = \tan^{-1}\left(\dfrac{15.90}{10.07}\right)$

$\theta = 57.65°$ ***Ans.***

(iv) Position of R

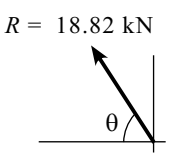

1. (b) A smooth circular cylinder of weight W and radius R rests in a V shape groove whose sides are inclined at angles α and β to the horizontal as shown in Fig. 1(b). Find the reactions R_A and R_B at the points of contact. **[04]**

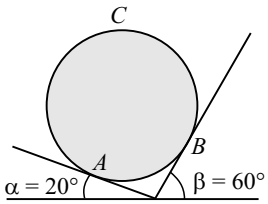

Fig. 1(b)

Solution

(i) Consider the F.B.D. of the cylinder.

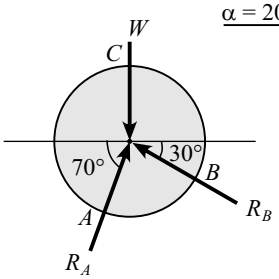

F.B.D. of the cylinder

(ii) By Lami's theorem, we have

$$\frac{W}{\sin 80°} = \frac{R_A}{\sin 120°} = \frac{R_B}{\sin 160°}$$

$\therefore\ R_A = 0.8794\ W$ ***Ans.***

$\therefore\ R_B = 0.3473\ W$ ***Ans.***

1. (c) For the block shown in Fig. 1(c), find the minimum value of *P*, which will just disturb the equilibrium of the system. **[04]**

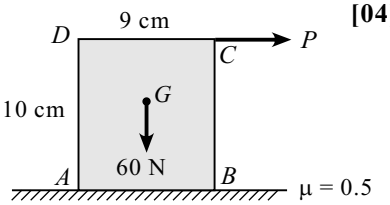

Fig. 1(c)

Solution

Case I : Sliding Motion

(i) Consider F.B.D. of case I

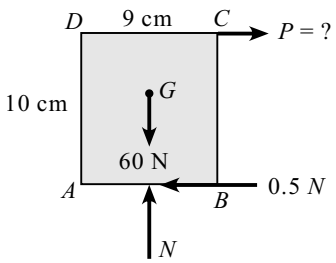

Case I

(ii) $\Sigma F_y = 0$

$N - 60 = 0$

$N = 60$ N ***Ans.***

$\Sigma F_x = 0$

$P - \mu N = 0$

$P - 0.5 \times 60 = 0$

$P = 30$ N

Case II : Tipping

(i) Consider F.B.D. of case II

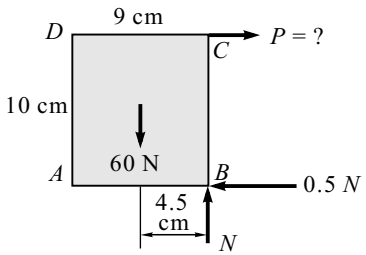

Case II

(i) $\Sigma M_B = 0$

$60 \times 4.5 - P \times 10 = 0$

$\therefore P = 27$ N

Comparing both cases we have $P_{\min} = 27$ N ***Ans.***

1. (d) A particle moving in the +ve *x*-direction has an acceleration $a = (100 - 4v^2)$ m/s^2. Determine the time interval and displacement of a particle when speed changes from 1 m/s to 3 m/s. **[04]**

Solution

(i) To find time interval when speed changes from 1 m/s to 3 m/s.

$$a = 100 - 4v^2$$

$$\frac{dv}{dt} = 4(25 - v^2)$$

$$\therefore \frac{dv}{25 - v^2} = 4\,dt \quad \text{Integrating both sides, we get}$$

$$\int_1^3 \frac{dv}{5^2 - v^2} = 4\int_{t_1}^{t_2} dt$$

$$\frac{1}{2 \times 5}\left[\log_e\left(\frac{5+v}{5-v}\right)\right]_1^3 = 4\,[\,t\,]_{t_1}^{t_2}$$

$$\frac{1}{10}\left[\log_e 4 - \log_e 1.5\right] = 4\,[t_2 - t_1]$$

$$\therefore\ t_2 - t_1 = \frac{1}{40}\log_e\left(\frac{8}{3}\right)$$

$\therefore$ Time interval $t_2 - t_1 = 0.0245$ sec. ***Ans.***

(ii) To find displacement when speed changes from 1 m/s to 3 m/s.

Given : $a = (100 - 4v^2)$

$$v\frac{dv}{ds} = 4(25 - v^2)$$

$$\therefore\ \frac{v\,dv}{5^2 - v^2} = 4\,ds$$

Integrating both sides

$$\frac{-1}{2}\int_1^3 \frac{-2v\,dv}{5^2 - v^2} = 4\int_{s_1}^{s_2} ds$$

$$\frac{-1}{2}\left[\log_e\,(25 - v^2)\right]_1^3 = 4[s]_{s_1}^{s_2}$$

$$\therefore\ s_2 - s_1 = -\frac{1}{8}\left[\log_e\,(25 - 3^2) - \log_e\,(25 - 1^2)\right]$$

$$\therefore\ s_2 - s_1 = \log_e\left(\frac{16}{24}\right)$$

$\therefore\ s_2 - s_1 = 0.0506$ m ***Ans.***

1. (e) A vertical lift of total mass 750 kg acquires an upward velocity of 3 m/s over a distance of 4 m moving with constant acceleration starting from rest. Calculate the tension in the cable. **[04]**

Solution

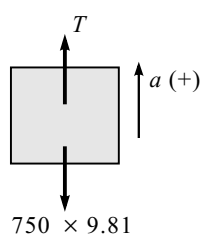

(i) Consider the F.B.D. of 750 kg block

(ii) From equation of motion,

$$v^2 = u^2 + 2as$$

Given : $u = 0$, $v = 3$ m/s , $s = 4$ m ; $a = ?$

$$3^2 = 0 + 2 \times a \times 4$$

$\therefore\ a = 1.125$ m/s^2 (↑) ***Ans.***

(ii) By Newton's second law we have

$$\Sigma F_y = ma$$

$$T - 750 \times 9.81 = 750 \times 1.125$$

$\therefore\ T = 750 \times 9.81 + 750 \times 1.125 = 8201.25$ N ***Ans.***

2. (a) Replace the system of forces and couples shown in Fig. 2(a) by a single force and locate the point on the *x*-axis through which the line of action of the resultant passes. **[06]**

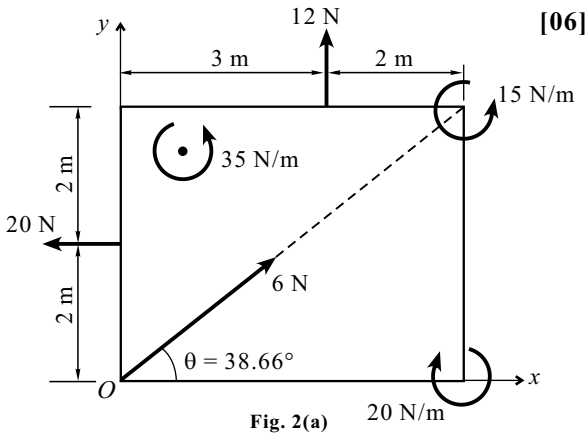

Fig. 2(a)

Solution

$$\theta = \tan^{-1}\left(\frac{4}{5}\right) \quad \therefore \quad \theta = 38.66^{\circ}$$

(i) $\Sigma F_x = -20 + 6\cos 38.66^{\circ}$

$= -15.31 \text{ N} = 15.31 \text{ N } (\leftarrow)$

(ii) $\Sigma F_y = 12 + 6\sin 38.66^{\circ}$

$= 15.74 \text{ N } (\uparrow)$

(iii) $R = \sqrt{(\Sigma F_x)^2 + (\Sigma F_y)^2}$

$= \sqrt{(15.31)^2 + (15.74)^2} = 21.95 \text{ N}$ ***Ans.***

(iv) $\phi = \tan^{-1}\left(\frac{15.74}{15.31}\right) = 45.79^{\circ}$ ***Ans.***

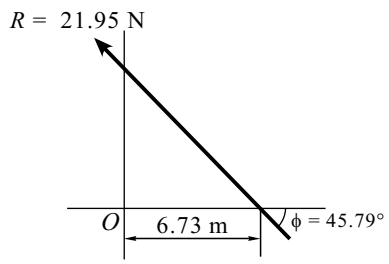

(v) $\Sigma M_O = -20 + 15 + 35 + 20 \times 2 + 12 \times 3$

$= 106 \text{ N.m } (\circlearrowleft)$

(vi) By Varignon's theorem, we have

$$x = \left(\frac{\Sigma M_O}{\Sigma F_y}\right) = \frac{106}{15.74} = 6.73 \text{ m} \quad \textbf{\textit{Ans.}}$$

(vii) Position of R w.r.t. point O

2. (b) Two identical rollers each of weight 500 N and radius *r* are kept on a right angle frame *ABC* having negligible weight. Assuming smooth surfaces, find the reactions induced at all contact surfaces. **[8]**

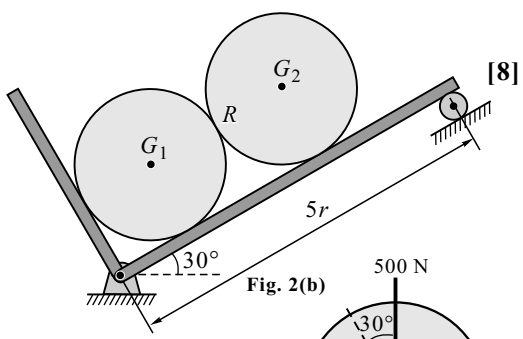

Fig. 2(b)

Solution

(i) Consider the F.B.D. of the both the rollers

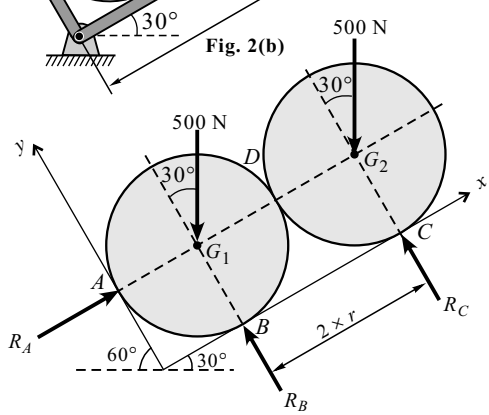

(ii) Given : $\theta = 30^{\circ}$ and $W = 500$ N

$\Sigma F_x = 0$

$R_A - 500\sin 30^{\circ} - 500\sin 30^{\circ} = 0$

$\therefore \; R_A = 2 \times 500 \times \sin 30^{\circ}$

$\therefore \; R_A = 500 \text{ N } (\nearrow 30^{\circ})$ ***Ans.***

(iii) $\Sigma M_{G_1} = 0$

$R_C \times (2r) - 500\cos 30^{\circ} \times (2r) = 0$

$\therefore R_C = 500 \cos 30°$

$\therefore R_C = 433$ N $\left(\overset{60°}{\nearrow}\right)$ ***Ans.***

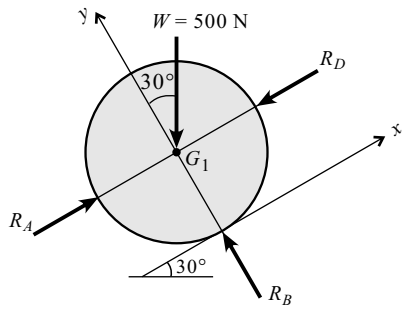

(iv) $\Sigma F_y = 0$

$R_C + R_B - 500 \cos 30° - 500 \cos 30° = 0$

$433 + R_B - 500 \cos 30° - 500 \cos 30° = 0$

$\therefore R_B = 433$ N $\left(\overset{60°}{\nearrow}\right)$ ***Ans.***

(v) Consider F.B.D. of lower roller, we have

$\Sigma F_x = 0$

$R_A - 500 \sin 30° - R_D = 0$

$\therefore 500 - 500 \sin 30° - R_D = 0$

$\therefore R_D = 250$ N $\left(\overset{30°}{\searrow}\right)$ ***Ans.***

2. (c) A body of mass 2 kg is projected upwards from the surface of the ground at $t = 0$ with velocity 20 m/s. At the same time another body of mass 2 kg is dropped along the same line from a height of 25 m. If they collide elastically, find the velocities of body *A* and *B* just after collision. **[06]**

Solution

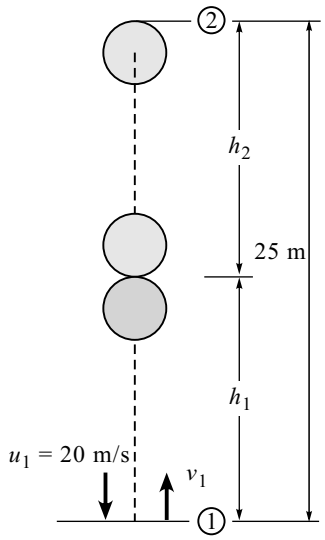

(i) Velocities of both the bodies before collision

Vertical upward motion of body 1

$$h = ut + \frac{1}{2}gt^2$$

$$h_1 = 20t - \frac{1}{2} \times 9.81 \times t^2 \quad \text{..... (I)}$$

Vertical downward motion of body 2

$$h = ut + \frac{1}{2}gt^2$$

$$h_2 = 0 + \frac{1}{2} \times 9.81 \times t^2 \quad \text{..... (II)}$$

$$h_1 + h_2 = 25 \text{ m (given)}$$

Adding equation (I) and (II), we get

$$20t - \frac{1}{2} \times 9.81 \times t^2 + \frac{1}{2} \times 9.81 \times t^2 = 25$$

$$20t = 25$$

$$\therefore t = 1.25 \text{ sec.}$$

For body 1

$$v = u + gt$$

$$u_1 = 20 + (-9.81) \times 1.25$$

$$u_1 = 7.74 \text{ m/s}$$

For body ②

$$v = u + gt$$
$$u_2 = 0 + 9.81 \times 1.25$$
$$u_2 = 12.26 \text{ m/s}$$

(ii) Impact between the two bodies

Since collision is perfectly elastic.

Therefore there will be no loss of energy and both bodies will exchange their velocities but will move in opposite direction after collision.

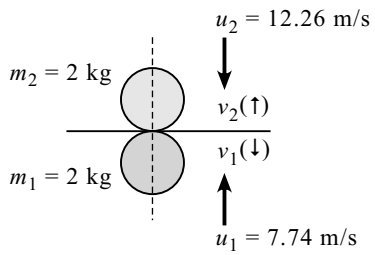

$$\therefore\ v_1 = 12.26 \text{ m/s } (\downarrow) \quad \textbf{\textit{Ans.}}$$
$$v_2 = 7.74 \text{ m/s } (\uparrow) \quad \textbf{\textit{Ans.}}$$

3. (a) Find centroid of the shaded area shown in Fig. 3(a). **[08]**

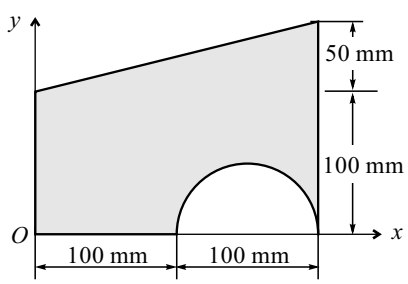

Fig. 3(a)

Solution

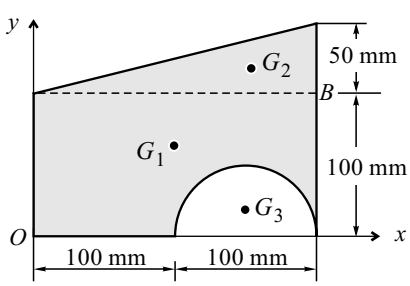

Coordinates of the centroid of shaded area

$$\bar{x} = \frac{200 \times 100 \times 100 + \frac{1}{2} \times 200 \times 50\left(\frac{2}{3} \times 200\right) - \frac{\pi \times 50^2}{2} \times 150}{200 \times 100 + \frac{1}{2} \times 200 \times 50 - \frac{\pi \times 50^2}{2}}$$

$$\bar{x} = 98.59 \text{ mm}$$

$$\bar{y} = \frac{200 \times 100 \times 50 + \frac{1}{2} \times 200 \times 50\left(100 \times \frac{50}{3}\right) - \frac{\pi \times 50^2}{2} \times \frac{4 \times 50}{3\pi}}{200 \times 100 + \frac{1}{2} \times 200 \times 50 - \frac{\pi \times 50^2}{2}}$$

$$\bar{y} = 71.18 \text{ mm}$$

Centroid $G(\bar{x}, \bar{y}) = (98.59, 71.18)$ mm ***Ans.***

3.(b) A rectangular parallelopiped carries 4 forces as shown in Fig. 3(b). Reduce the force system to a resultant force applied at the origin and a moment around origin. *OA* = 5 m, *OB* = 2 m, *OC* = 4 m. **[06]**

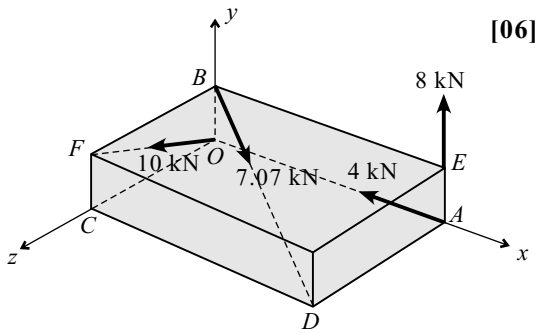

Fig. 3(b)

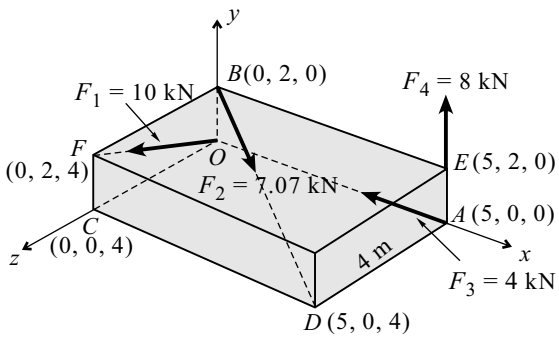

Solution

[I] Resultant force vector

(i) $\overline{F}_1 = F_1\,(\overline{e}_{OF}) = \dfrac{10(0\,\boldsymbol{i} + 2\,\boldsymbol{j} + 4\,\boldsymbol{k})}{\sqrt{0^2 + 2^2 + 4^2}}$

$= 2.23(0\,\boldsymbol{i} + 2\,\boldsymbol{j} + 4\,\boldsymbol{k})$

$\overline{F}_1 = 4.46\,\boldsymbol{j} + 8.92\,\boldsymbol{k}$

(ii) $\overline{F}_2 = F_2\,(\overline{e}_{BD}) = \dfrac{7.07(5\,\boldsymbol{i} - 2\,\boldsymbol{j} + 4\,\boldsymbol{k})}{\sqrt{5^2 + 2^2 + 4^2}}$

$= 1.05(5\,\boldsymbol{i} - 2\,\boldsymbol{j} + 4\,\boldsymbol{k})$

$\overline{F}_2 = 5.3\,\boldsymbol{i} - 2.12\,\boldsymbol{j} + 4.24\,\boldsymbol{k}$

(iii) $\overline{F}_3 = F_3\,(\overline{e}_{AO}) = \dfrac{4(-5\,\boldsymbol{i} + 0\,\boldsymbol{j} + 0\,\boldsymbol{k})}{\sqrt{5^2}}$

$\overline{F}_3 = -4\,\boldsymbol{i} + 0\,\boldsymbol{j} + 0\,\boldsymbol{k}$

(iv) $\overline{F}_4 = F_4\,(\overline{e}_{AE})$

$\overline{F}_4 = 8\,\boldsymbol{j}$

(v) Resultant force

$\overline{R} = \overline{F}_1 + \overline{F}_2 + \overline{F}_3 + \overline{F}_4$

$\overline{R} = (1.3\,\boldsymbol{i} + 10.34\,\boldsymbol{j} + 13.16\,\boldsymbol{k})$ N ***Ans.***

[II] Resultant of moment couples vector

(i) $\overline{M}_1 = 0$ (origin) and $\overline{M}_3 = 0$

(ii) $\overline{M}_2 = \overline{r}_{OB} \times \overline{F}_2 = \begin{vmatrix} \boldsymbol{i} & \boldsymbol{j} & \boldsymbol{k} \\ 0 & 2 & 0 \\ 5.3 & -2.12 & 4.24 \end{vmatrix}$

$\overline{M}_2 = 8.48\,\boldsymbol{i} - 0\,\boldsymbol{j} - 10.6\,\boldsymbol{k}$

(iii) $\overline{M}_4 = \overline{r}_{OA} \times \overline{F}_4 = \begin{vmatrix} \boldsymbol{i} & \boldsymbol{j} & \boldsymbol{k} \\ 5 & 0 & 0 \\ 0 & 8 & 0 \end{vmatrix}$

$\overline{M}_4 = 40\,\boldsymbol{k}$

(iv) $\overline{M}_R = \overline{M}_1 + \overline{M}_2 + \overline{M}_3 + \overline{M}_4 = (8.48\,\boldsymbol{i} + 29.4\,\boldsymbol{k})$ kN.m ***Ans.***

3. (c) A spring of stiffness *k* is placed horizontally and a ball of mass *m* strikes the spring with a velocity as shown in Fig. 3(c), find the maximum compression of the spring. Take *m* = 5 kg. *k* = 500 N/m, *v* = 3 m/s. **[06]**

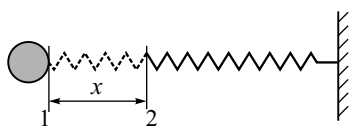

Fig. 3(c)

Solution

Given : $m = 5$ kg, $k = 500$ N/m

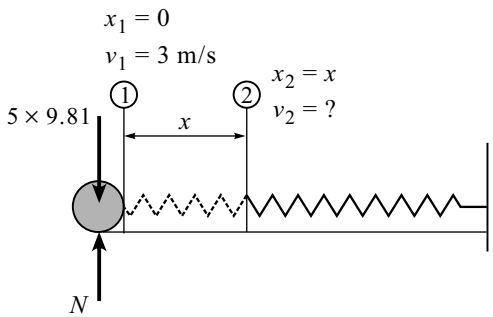

(i) At position ① | At position ②

$x_1 = 0$ | $x_2 = x$

$v_1 = 3$ m/s | $v_2 = ?$

(ii) By work energy principle, we have

Work done = Change in kinetic energy

$$\frac{1}{2} \times 500\,(0^2 - x^2) = 0 - \frac{1}{2} \times 5 \times 3^2$$

$\therefore\ x = 0.3$ m ***Ans.***

4. (a) Find the support reactions for the beam loaded as shown in the Fig. 4(a). **[08]**

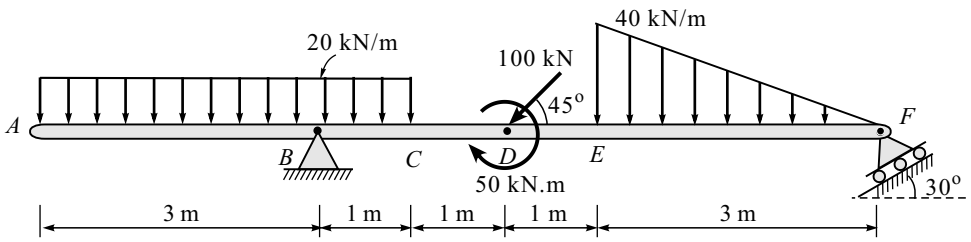

Fig. 4(a)

Solution

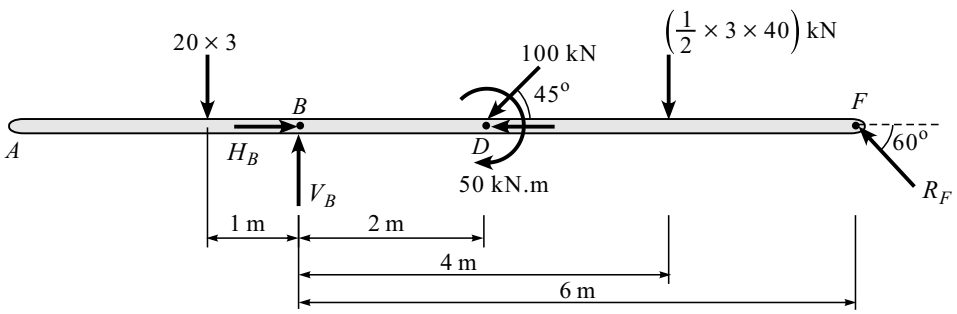

F.B.D. of beam *ADF*

(i) Consider the F.B.D. of the beam *ADF* with equivalent point load is shown in above figure.

(ii) $\Sigma M_B = 0$

$$20 \times 3 \times 1 - 100 \sin 45° \times 2 - 50 - \frac{1}{2} \times 3 \times 40 \times 4 + R_F \sin 60° \times 6 = 0$$

$R_F = 71.48$ kN ***Ans.***

(iii) $\Sigma F_x = 0$

$$H_B - 100 \cos 45° - R_F \cos 60° = 0$$

$H_B = 106.45$ kN (→) ***Ans.***

(iv) $\Sigma F_y = 0$

$$V_B - 20 \times 3 - 100 \sin 45° - \frac{1}{2} \times 3 \times 40 + R_F \sin 60° = 0$$

$$V_B = 128.80 \text{ kN } (\uparrow) \quad \textbf{\textit{Ans.}}$$

(iv) $\theta = \tan^{-1}\left(\frac{V_B}{H_B}\right) = \tan^{-1}\left(\frac{128.80}{106.45}\right) = 50.43°$

(iii) $R = \sqrt{H_B^2 + V_B^2}$

$$= \sqrt{(106.45)^2 + (128.80)^2} = 21.95 \text{ N } \left(\angle 50.43°\right) \quad \textbf{\textit{Ans.}}$$

4. (b) A ball thrown with a speed of 12 m/s at an angle of 60° with a building strikes the ground 11.3 m horizontally from the foot of the building as shown in Fig. 4(b). Determine the height of the building. **[06]**

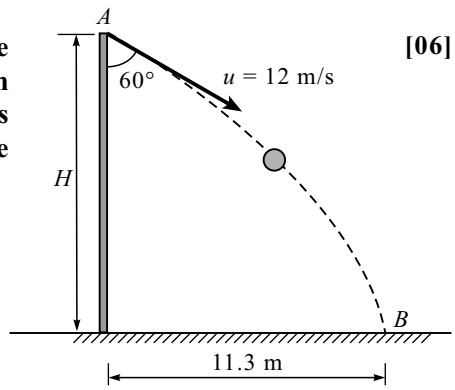

Fig. 4(b)

Solution

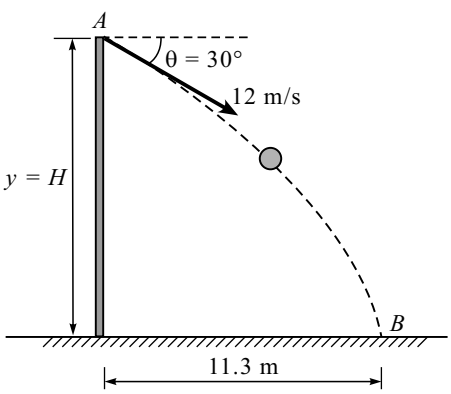

By general equation of projectile motion, we have

$$y = x \tan \theta - \frac{gx^2}{2u^2}(1 + \tan^2 \theta)$$

$$\therefore -H = 11.3 \tan(-30°) - \frac{9.81 \times (11.3)^2}{2 \times (12)^2}[1 + \tan^2(-30°)]$$

$$\therefore H = 12.32 \text{ m} \quad \textbf{\textit{Ans.}}$$

4. (c) In a crank and connecting rod mechanism shown in Fig. 4(c), the length of crank and the connecting rod are 300 mm and 1200 mm respectively. The crank is rotating at 180 r.p.m. Find the velocity of piston, when the crank is at an angle of 45° with the horizontal. **[06]**

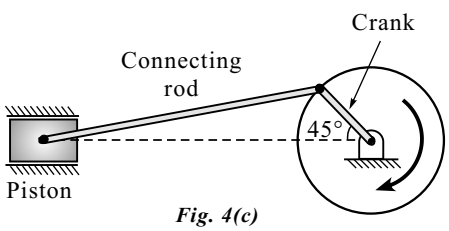

Fig. 4(c)

Consider the F.B.D. of the system

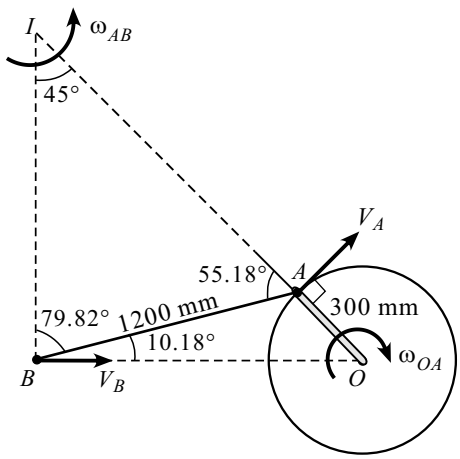

(i) $\omega_{OA} = \dfrac{2\pi N}{60} = \dfrac{2\pi \times 180}{60}$

$\omega_{OA} = 18.84$ r/s (↻)

(ii) In ΔOAB, by sine rule, we have

$\dfrac{300}{\sin \alpha} = \dfrac{1200}{\sin 45°}$

$\alpha = 10.18°$

(iii) Consider crank OA

$V_A = OA \times \omega_{OA} = 300 \times 18.84$

$\therefore\ V_A = 5.654$ m/sec $(\angle 45°)$

(iv) In ΔIAB, by sine rule, we have

$\dfrac{AB}{\sin 45°} = \dfrac{IA}{\sin (79.82°)} = \dfrac{IB}{\sin (55.18°)}$

$\therefore\ IA = 0.167$ m

$\therefore\ IB = 0.135$ m

(v) Consider rod AB

$V_A = IA \times \omega_{AB}$

$\omega_{AB} = \dfrac{5.654}{0.167}$

$\omega_{AB} = 33.85$ r/s (↺) ***Ans.***

(vi) $V_B = IB \times \omega_{AB}$

$V_B = 0.135 \times 33.85$

$V_B = 4.57$ m/sec (→) ***Ans.***

5. (a) Referring to the truss shown in Fig. 5(a), find (i) Reactions at *D* and *C*. (ii) Zero force members. (iii) Forces in members *FE* and *DC* by method of sections. (iv) Forces in other members by method of joints. **[08]**

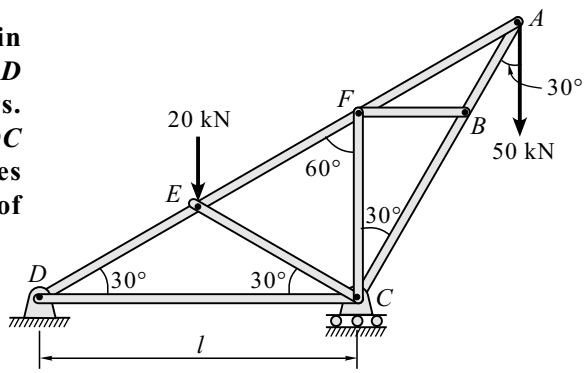

Fig. 5(a)

Solution

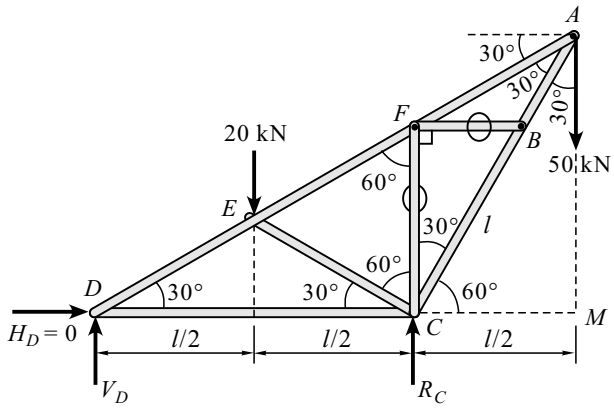

(i) In ΔDCA,

$$\frac{CD}{\sin 30°} = \frac{AC}{\sin 30°} = \frac{AD}{\sin 120°}$$

$$\frac{CD}{\sin 30°} = \frac{AC}{\sin 30°}$$

$\therefore\ CD = AC = l$

In ΔCMA,

$\cos 60° = \dfrac{CM}{AC}$	$\sin 60° = \dfrac{AM}{AC}$
$\cos 60° = \dfrac{CM}{l}$	$AM = l \sin 60°$
$CM = \dfrac{l}{2}$	$AM = 0.87\, l$

To find support reactions at D and C

$\Sigma M_D = 0$

$R_C \times L - 20 \times \dfrac{l}{2} - 50 \times \dfrac{3l}{2} = 0$ $\quad\therefore\ R_C = 85$ kN (↑) ***Ans.***

$\Sigma F_y = 0$

$V_D - 20 + R_C - 50 = 0$

$V_D - 20 + 85 - 50 = 0$

$\therefore\ V_D = -15$ kN $= 15$ kN (↓) ***Ans.***

Zero force member :

$F_{BF} = 0$; $F_{CF} = 0$

(ii) Method of Section

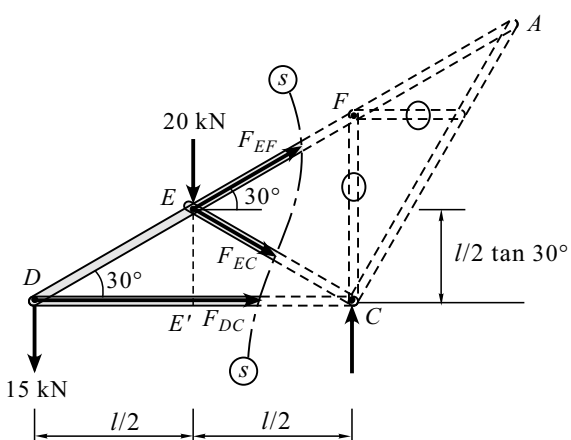

Consider section (s) - (s)

$\Sigma M_C = 0$

$-15 \times l - 20 \times \dfrac{l}{2} + F_{EF} \sin 30° \times \dfrac{l}{2}$

$\qquad + F_{EF} \cos 30° \times \dfrac{l}{2} \tan 30° = 0$

$-15 - 10 + F_{EF}\left(\dfrac{\sin 30°}{2} + \dfrac{\sin 30°}{2}\right) = 0$

$F_{EF} \sin 30° = 25$

$\therefore\ F_{EF} = 50$ kN (T) ***Ans.***

$\Sigma M_E = 0$

$F_{DC} \times \dfrac{l}{2} \tan 30° + 15 \times \dfrac{l}{2} = 0$

$F_{DC} = -25.98$ kN $= 25.98$ kN (C)

$$\tan 30° = \frac{EE'}{DE'}$$

$$EE' = \frac{l}{2} \tan 30°$$

(iii) Method of Joints

Joint *D*

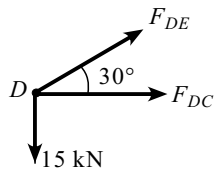

$\Sigma F_y = 0$

$F_{DE} \sin 30° - 15 = 0$

$F_{DE} = 30$ kN (T) ***Ans.***

$\Sigma F_x = 0$

$F_{DE} \cos 30° + F_{DC} = 0$

$F_{DC} = -25.98$ kN

$= 25.98$ kN (C) ***Ans.***

Joint *C*

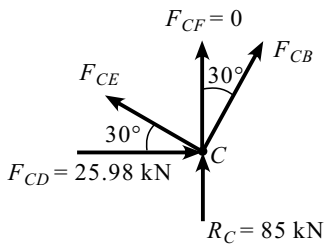

$\Sigma F_x = 0$; $25.98 - F_{CE} \cos 30° + F_{CB} \cos 60° = 0$

$0.5\, F_{CB} - 0.866\, F_{CE} = -25.98$ ... (I)

$\Sigma F_y = 0$; $F_{CE} \sin 30° + CB \cos 30° + 85 = 0$

$0.5\, F_{CE} + 0.866\, CB = -85$ ... (II)

Solving (I) and (II) we get

$F_{CE} = -20$ kN $= 20$ kN (C) ***Ans.*** and $F_{CB} = -86.6$ kN $= 86.6$ kN (C) ***Ans.***

5. (b) A point moves along a path $y = x^2/3$ with a constant speed of 8 m/s. What are the x and y components of its velocity when $x = 3$? What is the acceleration of the point at this instant ? [06]

Solution

Given : $v = 8$ m/s constant

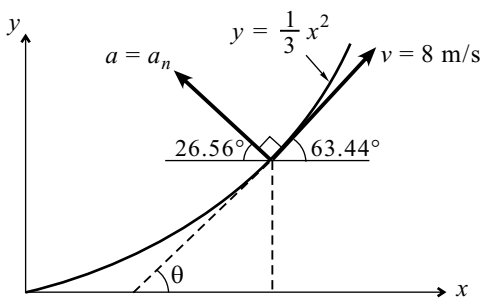

$a_t = 0 \qquad a_t = \dfrac{dv}{dt} = 0$

$a_n = a \qquad [\because a_t = 0]$

$\therefore a_n = \dfrac{v^2}{\rho}$

Equation of curve $y = \dfrac{x^2}{3}$

Differentiating w.r.t. x,

$$\frac{dy}{dx} = \frac{2x}{3}$$

At point $x = 3$, $\dfrac{dy}{dx} = \dfrac{2}{3} \times 3 = 2$

$$\therefore \frac{d^2y}{dx^2} = \frac{2}{3} \text{ (constant)}$$

$$\therefore \rho = \left| \frac{\left[1 + \left(\dfrac{dy}{dx}\right)^2\right]^{3/2}}{\dfrac{d^2y}{dx^2}} \right| = \frac{\left[1 + (2)^2\right]^{3/2}}{\dfrac{2}{3}}$$

$\therefore \rho = 16.77$ m

$$a_n = \frac{v^2}{\rho} = \frac{8^2}{16.77}$$

$$a_n = 3.82 \text{ m/s}^2$$

$$\tan\theta = \left(\frac{dy}{dx}\right)_{x=3} = 2$$

$$\theta = 63.44°$$

$$v_x = v\cos\theta = 8\cos 63.44° = 3.58 \text{ m/s}$$

$$v_y = v\sin\theta = 8\sin 63.44° = 7.15 \text{ m/s}$$

We have $a = \sqrt{a_t^2 + a_n^2} = \sqrt{0 + 3.82^2}$

$\therefore$ $a = 3.82 \text{ m/s}^2$ (26.56°) ***Ans.***

5. (c) At the position shown in the Fig. 5(c), the crank *AB* has angular velocity of 3 rad/sec clockwise. Find the velocity of the slider *C* and point *D* at the instant shown, *AB* = 100 mm. **[06]**

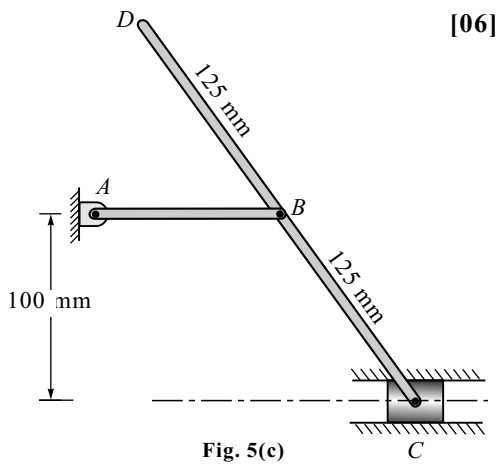

Fig. 5(c)

Solution

(i) Crank *AB* (Performs rotational motion about point *A*)

$$v_B = (AB)(\omega_{AB}) = 100 \times 3$$

$$v_B = 300 \text{ mm/sec } (\downarrow)$$

In Δ *IBC*,

$$(BC)^2 = (IB)^2 + (IC)^2$$

$$(IB)^2 = (BC)^2 - (IC)^2 = 125^2 - 100^2$$

$$IB = 75 \text{ mm}$$

$$IC = 100 \text{ mm}$$

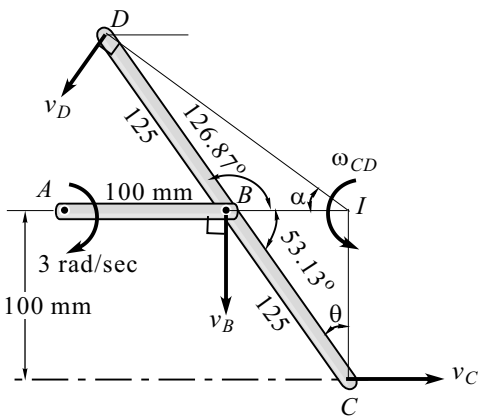

(ii) Rod *CD* (Performs general plane motion)

At the given instant point *I* is the ICR

$$v_B = (IB)\,\omega_{CD}$$

$$\omega_{CD} = \frac{300}{75}$$

$$\omega_{CD} = 4 \text{ r/s } (\circlearrowleft) \quad \textbf{\textit{Ans.}}$$

(iii) To get velocity of D, we need ID

By cosine rule,

$$(ID)^2 = (IC)^2 + (CD)^2 - 2(IC)(CD)\cos 36.87^\circ$$

$$\theta = \tan^{-2}\left(\frac{IB}{IC}\right) = \tan^{-1}\left(\frac{75}{100}\right) = 36.87^\circ$$

$$(ID)^2 = 100^2 + 250^2 - 2(100)(250)\cdot\cos 36.87^\circ$$

$$ID = 180.28 \text{ mm}$$

$$v_D = (ID)(\omega_{CD}) = 180 \times 4$$

$$v_D = 720 \text{ mm/sec} \quad \textbf{\textit{Ans.}}$$

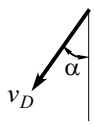

In $\Delta\, DBI$,

$$\frac{125}{\sin\alpha} = \frac{ID}{\sin 126.87^\circ}$$

$$\sin\alpha = \frac{125}{180.28 \times \sin 126.87^\circ}$$

$$\alpha = 33.690^\circ$$

6. (a) Force $\overline{F}$ = 80 i + 50 j – 60 k passes through a point A(6, 2, 6). Compute its moment about a point B(8, 1, 4). **[04]**

Solution

(i) Moment of $\overline{F}$ about the point B ($\overline{M}_B$)

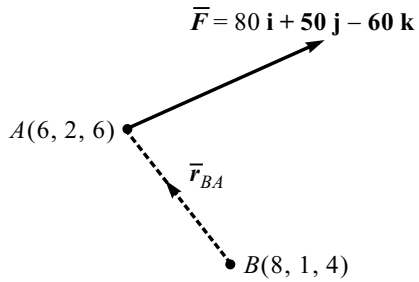

(a) Position vector ($\overline{r}_{BA}$)

$$\overline{r}_{BA} = \overline{BA}$$

$$\overline{r}_{BA} = -2\,\mathbf{i} + \mathbf{j} + 2\,\mathbf{k}$$

(b) Force vector ($\overline{F}$)

$$\overline{F} = 80\,\mathbf{i} + 50\,\mathbf{j} - 60\,\mathbf{k}$$

(c) Moment vector ($\overline{M}_B$)

$$\overline{M}_B = \overline{r}_{BA} \times \overline{F} \quad \text{(cross product)}$$

$$\overline{M}_B = \begin{vmatrix} \mathbf{i} & \mathbf{j} & \mathbf{k} \\ -2 & 1 & 2 \\ 80 & 50 & -60 \end{vmatrix} = (-60 - 100)\,\mathbf{i} - (120 - 160)\,\mathbf{j} + (-100 - 80)\,\mathrm{k}$$

$$\therefore\ \overline{M}_B = (-160\,\mathbf{i} + 40\,\boldsymbol{j} - 180\,\boldsymbol{k}) \text{ N.m} \quad \textbf{\textit{Ans.}}$$

6. (b) Assuming the values for μ = 0.25 at the floor and 0.3 at the wall and 0.2 between the blocks, find the minimum value of a horizontal force P applied to the lower block that will hold the system in equilibrium. **[08]**

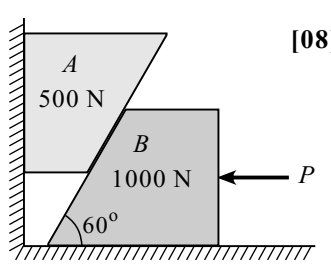

Fig. 6(b)

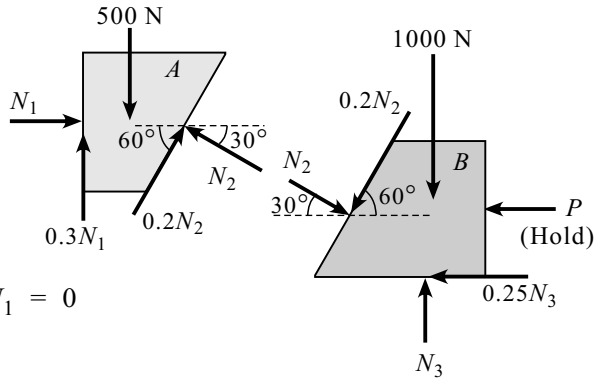

(i) From F.B.D. of 500 N Block

$\Sigma F_x = 0$

$0.2\ N_2 \cos 60° - N_2 \cos 30° - N_1 = 0$

$N_1 = 0.766\ N_2$ ..... (I)

$\Sigma F_y = 0$

$0.2\ N_2 \sin 60° + N_2 \sin 30° - 500 + 0.3\ N_1 = 0$

Put value of N_1 from equation (I)

$\therefore\ 0.673\ N_2 - 500 + 0.3 \times 0.766\ N_2 = 0$

$\therefore\ N_2 = 553.71$ N ..... (II)

(ii) From F.B.D. of 1000 N Block

$\Sigma F_y = 0$

$N_3 - 0.2\ N_2 \sin 60° - N_2 \cos 60° - 1000 = 0$

Put value of N_2 from equation (I)

$N_3 - 0.2 \times 553.706 \sin 60° - 553.706 \cos 60° - 1000 = 0$

$N_3 = 1372.76$ N

$\Sigma F_x = 0$

$N_2 \cos 30° - P - 0.2\ N_2 \cos 60° - 0.25\ N_3 = 0$

$553.71 \cos 30° - P - 0.2 \times 553.71 \cos 60° - 0.25 \times 1372.76 = 0$

$\therefore\ P = 80.96$ N (←) ***Ans.***

6. (c) The car moves in a straight line such that for a short time its velocity is defined by $v = (9t^2 + 2t)$ m/s where t is in seconds. Determine its position and acceleration when $t = 3$ sec. **[04]**

Solution

At $t = 0$, $u = 0$

$v = 9t^2 + 2t$ (given)

(i) Acceleration $a = \dfrac{dv}{dt} = 9 \times 2t + 2$

$a = 18t + 2$

At $t = 3$ sec.

$a = 18 \times 3 + 2$

$a = 56$ m/s^2 ***Ans.***

(ii) $\dfrac{dx}{dt} = 9t^2 + 2t$ Integrating both sides, we get

$$\int dx = \int (9t^2 + 2t)\, dt$$

$$x = \frac{9t^3}{3} + \frac{2t^2}{2} + c$$

At $t = 0$, $x = 0$ $\therefore$ $c = 0$

$\therefore$ $x = 3t^3 + t^2$

At $t = 3$ seconds

$x = 3 \times 3^3 + 3^2$

$x = 90$ m ***Ans.***

6. (d) Three blocks m_1, m_2 and m_3 of masses 1.5 kg, 2 kg and 1 kg respectively are placed on a rough surface with $m = 0.2$ as shown in Fig. 6(d). If a force F is applied to accelerate the blocks at 3 m/s^2, what will be the force that 1.5 kg block exerts on 2 kg block ? **[04]**

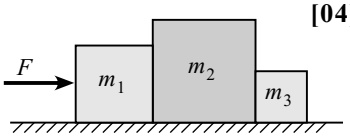

Fig. 6(d)

Solution

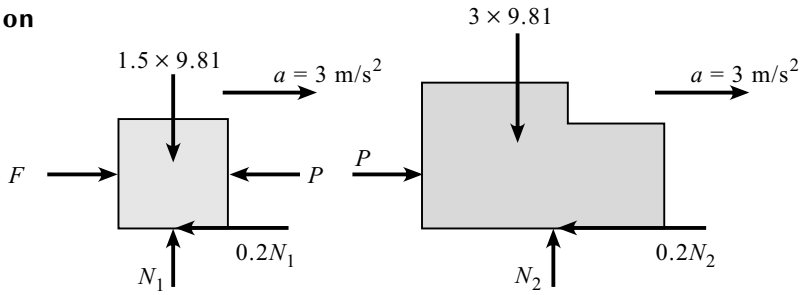

Considering F.B.D. of m_2 and m_3 together

By Newton's IInd law

$$\Sigma F_x = ma_x$$

$$P - 0.2N_2 = 3 \times 3$$

But $N_2 = 3 \times 9.81$

$$P = 9 + 0.2(3 \times 9.81)$$

$P = 14.886$ N ***Ans.***

●●●

MAY - 2013

1. (a) Find forces *P* and *Q* such that resultant of given system in Fig. 1(a) is zero. **[04]**

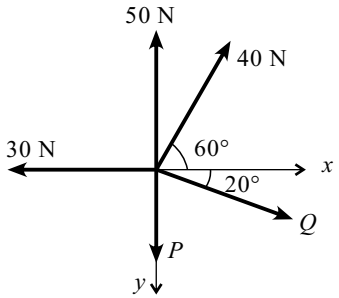

Fig. 1(a)

Solution

(i) $\Sigma F_x = 0$

$Q \cos 20° + 40 \cos 60° - 30 = 0$

$\therefore\ Q = 10.64$ N ***Ans.***

(ii) $\Sigma F_y = 0$

$50 - P + 40 \sin 60° - Q \sin 20° = 0$

$\therefore\ P = 81$ N (↓) ***Ans.***

1. (b) A cylinder *B*, W_B = 1000 N, dia. 40 cm, hangs by a cable *AB* = 40 cm rests against a smooth wall. Find out reaction at *C* and T_{AB}. **[04]**

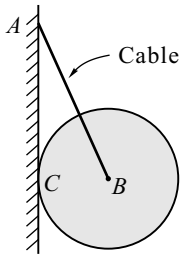

Fig. 1(b)

Solution

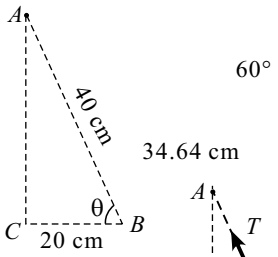

(i) $\cos\theta = \dfrac{CB}{AB} = \dfrac{20}{40}$

$\therefore\ \theta = 60°$

(ii) Applying Lami's theorem

$$\frac{1000}{\sin 120°} = \frac{T_{AB}}{\sin 90°} = \frac{R_C}{\sin 150°}$$

Tension $T_{AB} = 1154.70$ N ***Ans.***

Reaction $R_C = 577.35$ N ***Ans.***

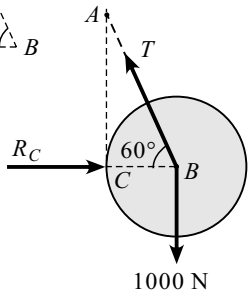

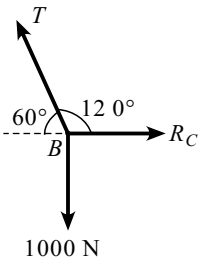

1. (c) A block of weight 1000 N is kept on a rough inclined surface. Find out range of *P* for which the block will be in equilibrium. **[04]**

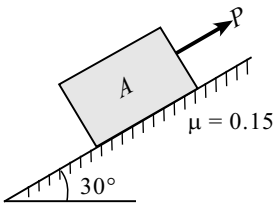

Fig. 1(c)

Solution

(i) Consider the F.B.D. of the block

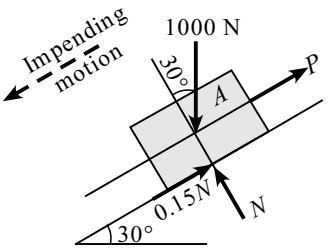

F.B.D. of Block

$\Sigma F_y = 0$

$N - 1000 \cos 30° = 0$

$\therefore\ N = 866$ N

$\Sigma F_x = 0$

$P - 100 \sin 30° + 0.15 \times N = 0$

$P - 100 \sin 30° + 0.15 \times 866 = 0$

$\therefore\ P_{min} = 370.10$ N ***Ans.***

(ii) Consider the F.B.D. of the block

$\Sigma F_y = 0$

$N - 1000 \cos 30° = 0$

$\therefore N = 866$ N

$\Sigma F_x = 0$

$P - 1000 \sin 30° \quad 0.15 \times N = 0$

$\therefore P_{max} = 629.90$ N ***Ans.***

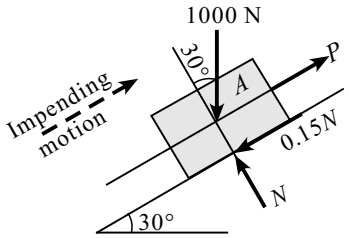

F.B.D. of Block

$\therefore$ Range of P is $P_{min} = 370.10$ N to $P_{max} = 629.90$ N ***Ans.***

1. (d) A curvilinear motion of a particle is defined by $v_x = 25 - 8t$ m/s and $y = 48 - 3t^2$ m. At $t = 0$, $x = 0$. Find out position, velocity and acceleration at $t = 4$ sec. **[04]**

Solution

Given $v_x = 25 - 8t$

$\frac{dx}{dt} = 25 - 8t \quad \therefore dx = (25 - 8t)\, dt$

Integrating

$x = 25t - 4t^2 + c$

At $t = 0$, $x = 0 \quad \therefore c = 0$

$\therefore x = 25t - 4t^2$

Differentiating twice we get

$a_x = -8$ m/s^2

$y = 48 - 3t^2$

$\frac{dy}{dt} = v_y = -6t$ m/s

$\frac{dv_y}{dt} = a_y = -6$ m/s^2

At $t = 4$ sec,

$x = 25 \times 4 - 4 \times 4^2 = 36$ m

$v_x = 25 - 8 \times 4 = -7$ m/s

$a_x = -8$ m/s^2

$y = 48 - 3 \times 4^2 = 0$

$v_y = -6 \times 4 = -24$ m/s

$a_y = -6$ m/s^2

Position $x = 36$ m ***Ans.***

Velocity $v = \sqrt{v_x^2 + v_y^2} = \sqrt{(-7)^2 + (-24)^2}$

$\therefore v = 25$ m/s ***Ans.***

Acceleration $a = \sqrt{a_x^2 + a_y^2} = \sqrt{(-8)^2 + (-6)^2}$

$\therefore a = 10$ m/s^2 ***Ans.***

1. (e) State D'Alembert's principle with two examples. **[04]**

Solution

Refer : *Text Book*

2. (a) Find out resultant of given (lever) force system in Fig. 2(a) w.r.t. "*B*". **[06]**

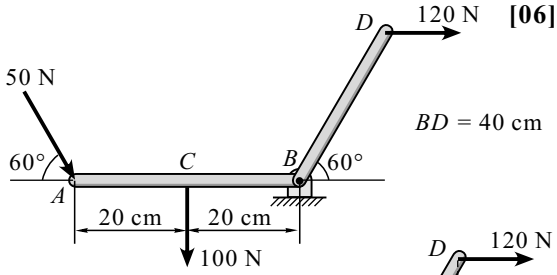

Fig. 2(a)

Solution

(i) $\Sigma F_x = 50 \cos 60° + 120 = 145 \text{ N } (\rightarrow)$

(ii) $\Sigma F_y = -50 \sin 60° - 100 = -143.30 \text{ N}$

$\Sigma F_y = 143.30 \text{ N } (\downarrow)$

(iii) $R = \sqrt{(145)^2 + (143.30)^2} = 203.86 \text{ N}$ ***Ans.***

(iv) $\theta = \tan^{-1}\left(\frac{143.30}{145}\right) = 44.66°$ ***Ans.***

(v) $\Sigma M_B = 50 \sin 60° \times 40 + 100 \times 20 - 120 \times 40 \sin 60°$

$= -424.87 \text{ N.cm} = 424.87 \text{ N.cm } (\circlearrowright)$ ***Ans.***

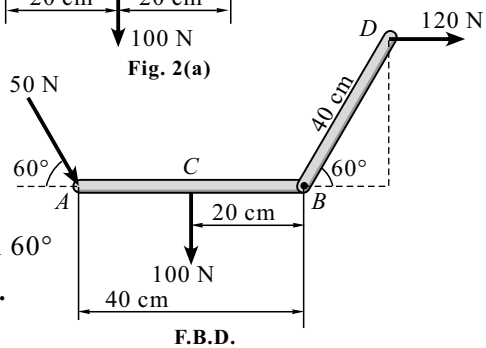

F.B.D.

(vi) By Varignon's theorem, we have

$$d = \left(\frac{\Sigma M_B}{R}\right) = \frac{424.87}{203.86} = 2.084 \text{ m} \quad \textbf{\textit{Ans.}}$$

(vii) Position of R w.r.t. point B

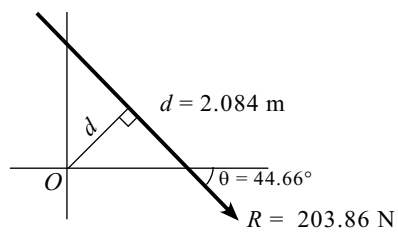

2. (b) Two identical cylinders of diameter 100 mm and each weighing 200 N are placed as shown in Fig. 2(b). All the contact surfaces are smooth. Find the reactions at *A*, *B* and *C*. **[08]**

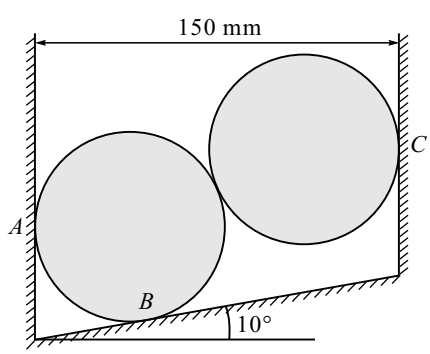

Fig. 2(b)

Solution

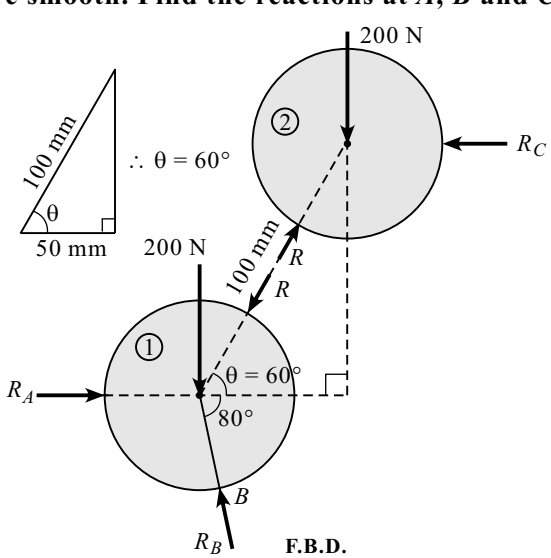

F.B.D.

(i) Consider the F.B.D. of the cylinder ②

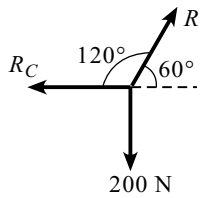

(ii) By Lami's theorem, we have

$$\frac{200}{\sin 120°} = \frac{R}{\sin 90°} = \frac{R_C}{\sin 150°}$$

$R = 230.94$ N (60°) ***Ans.***

$R_C = 115.47$ N (←) ***Ans.***

(iii) Consider the F.B.D. of the cylinder ①

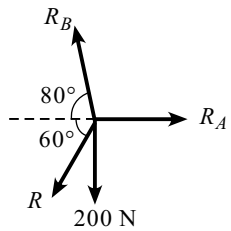

$\Sigma F_y = 0$

$R_B \sin 80° - 200 - R \sin 60° = 0$

$R_B = 406.17$ N (80°) ***Ans.***

$\Sigma F_x = 0$

$-R_B \cos 80° - R \cos 60° + R_A = 0$

$R_A - R_B \cos 80° = 115.47$

$R_A - 406.17 \cos 80° = 115.47$

$R_A = 186$ N (→) ***Ans.***

2. (c) A ball of mass *m* kg hits an inclined smooth surface with a velocity u_1 = 3 m/s. Find out velocity of rebound. **[06]**

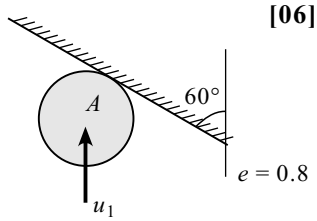

Solution

(i) $u_1 = 3$ m/s (↑)

$v_{1x} = 3 \cos 60° = 1.5$ m/s ***Ans.***

(ii) By coefficient of restitution, we have

$$e = \left[\frac{v_{2y} - v_{1y}}{u_{2y} - u_{1y}}\right]$$

$$0.8 = \left[\frac{0 - (-v_{1y})}{0 - (3 \sin 60°)}\right]$$

$v_{1y} = 2.07$ m/s ***Ans.***

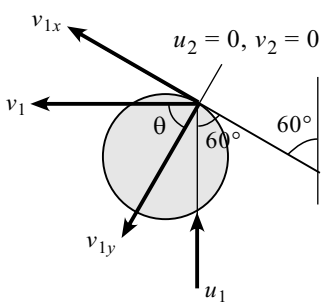

(iii) $v_1 = \sqrt{(v_{1x})^2 + (v_{1y})^2} = \sqrt{(1.5)^2 + (2.07)^2}$

$v_1 = 2.55$ m/s ***Ans.***

Angle of rebound

$$\theta = \tan^{-1}\left(\frac{1.5}{2.07}\right)$$

$\theta = 35.8°$ ***Ans.***

3. (a) Find centroid of the shaded area. **[08]**

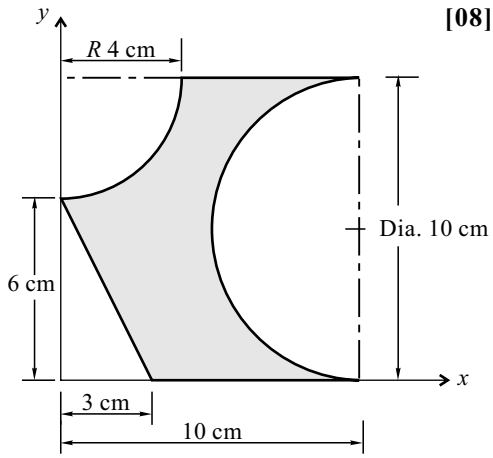

Fig. 3(a)

Solution

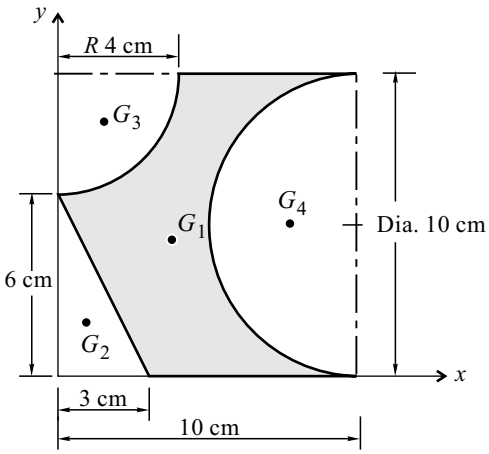

Coordinates of the centroid of shaded area

$$\bar{x} = \frac{10 \times 10 \times 5 - \frac{1}{2} \times 3 \times 6 \times 1 - \frac{\pi \times 4^2}{4} \times \frac{4 \times 4}{3\pi} - \frac{\pi \times 5^2}{2}\left(10 - \frac{4 \times 5}{3\pi}\right)}{10 \times 10 - \frac{1}{2} \times 3 \times 6 - \frac{\pi \times 4^2}{4} - \frac{\pi \times 5^2}{2}}$$

$$\bar{x} = \frac{160.26}{39.16} = 4.09 \text{ cm}$$

$$\bar{y} = \frac{10 \times 10 \times 5 - \frac{1}{2} \times 3 \times 6 \times 2 - \frac{\pi \times 4^2}{4} \times \left(10 - \frac{4 \times 4}{3\pi}\right) - \frac{\pi \times 5^2}{2} \times 5}{10 \times 10 - \frac{1}{2} \times 3 \times 6 - \frac{\pi \times 4^2}{4} - \frac{\pi \times 5^2}{2}}$$

$$\bar{y} = \frac{181.32}{39.16} = 4.63 \text{ cm}$$

Centroid $G(\bar{x}, \bar{y}) = (4.09, 4.63)$ cm ***Ans.***

3. (b) Explain conditions for equilibrium for forces in space. **[06]**

Solution

Refer : *Text Book*

3. (c) Explain work energy principle. **[06]**

Solution

Refer : *Text Book*

4. (a) Find the support reactions at hinge *A* and roller *B*. **[08]**

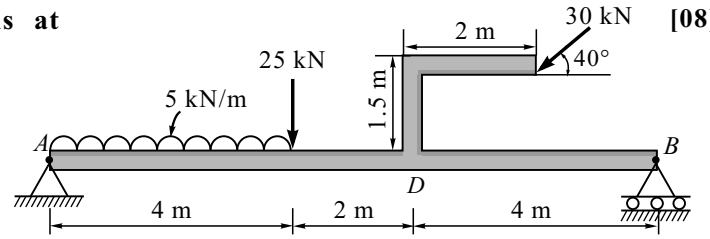

Fig. 4(a)

Solution

(i) Consider the F.B.D. of beam *AB*

(ii) $\Sigma M_A = 0$

$R_B \times 10 + 30 \cos 40° \times 1.5 - 30 \sin 40° \times 8 - 25 \times 4 - 5 \times 4 \times 2 = 0$

$R_B = 25.98$ kN (↑)

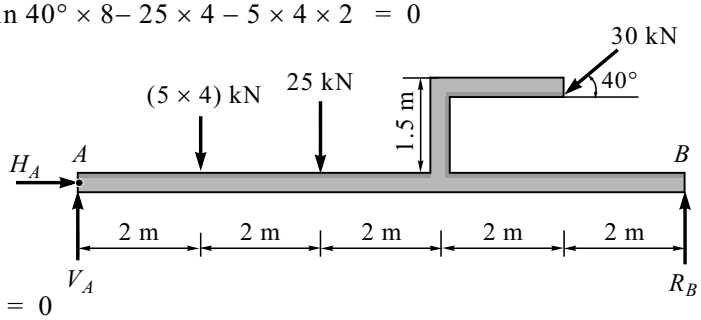

(iii) $\Sigma F_x = 0$

$H_A - 30 \cos 40° = 0$

$H_A = 22.98$ kN (→)

(iv) $\Sigma F_y = 0$

$V_A + R_B - 5 \times 4 - 25 - 30 \sin 40° = 0$

$V_A = 38.3$ kN (↑)

(v) $\theta = \tan^{-1}\left(\frac{V_A}{H_A}\right) = \tan^{-1}\left(\frac{38.31}{22.98}\right) = 59°$

$R_A = \sqrt{(V_A)^2 + (H_A)^2} = \sqrt{(38.31)^2 + (22.98)^2} = 44.67$ kN ***Ans.***

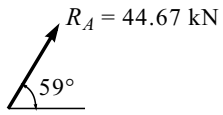

4. (b) Explain *x-t*, *v-t* and *a-t* curves in Kinematics. **[06]**

Solution

Refer : *Text Book*

4. (c) Collar *B* moves up with constant velocity v_B = 2 m/s. Rod *AB* is pinned at *B*. Find out angular velocity of *AB* and velocity of *A*. **[06]**

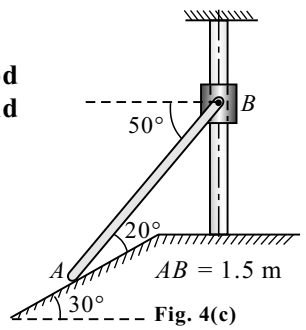

Fig. 4(c)

Solution

(i) In Δ *IAB*, by sine rule

$$\frac{1.5}{\sin 60°} = \frac{IA}{\sin 50°} = \frac{IB}{\sin 70°}$$

$I_A = 1.327$ m and $I_B = 1.628$ m

(ii) $v_B = (IB)(\omega_{AB})$

$\omega_{AB} = \frac{2}{1.628}$

$\omega_{AB} = 1.23$ rad/sec (↺) ***Ans.***

(iii) $v_A = (IA)(\omega_{AB})$

$v_A = 1.3274 \times 1.23$

$v_A = 1.63$ m/s $\left(\angle 30°\right)$ ***Ans.***

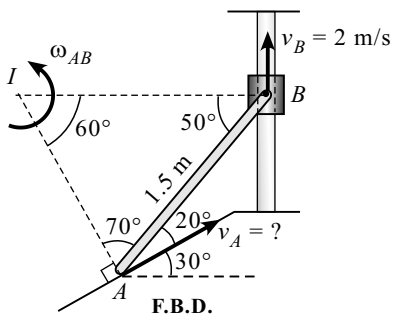

F.B.D.

5. (a) Find forces in *FB* and *BE* shown in Fig. 5(a) using method of section and other members using method of joints. **[08]**

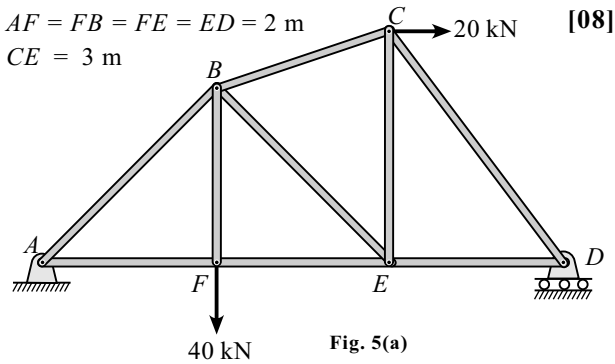

Fig. 5(a)

Solution

(i) Consider F.B.D. of Entire Truss

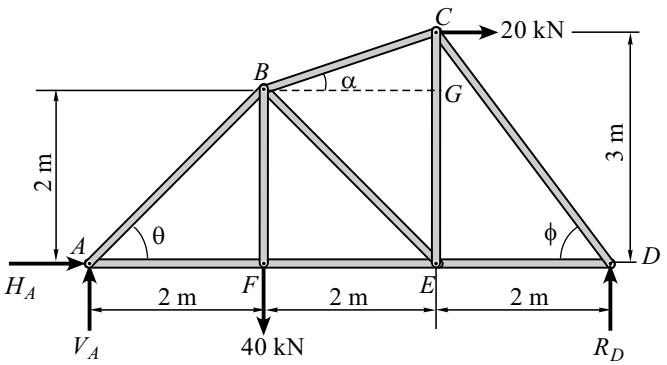

$\Sigma M_D = 0$

$-20 \times 3 - 40 \times 2 + R_D \times 6 = 0$

$R_D = 23.33$ kN (↑)

$\Sigma F_x = 0$

$H_A + 20 = 0$

$H_A = -20$ kN

$H_A = 20$ kN (←)

$\Sigma F_y = 0$

$V_A - 40 + R_D = 0$

$V_A = 16.67$ kN (↑)

(ii) From triangle ABF, $\theta = \tan^{-1}\left(\frac{FB}{AF}\right) = \tan^{-1}\left(\frac{2}{2}\right)$

$\theta = 45°$

From triangle DCE, $\phi = \tan^{-1}\left(\frac{EC}{DE}\right) = \tan^{-1}\left(\frac{3}{2}\right)$

$\phi = 56.31°$

From triangle BCG, $\alpha = \tan^{-1}\left(\frac{CG}{BG}\right) = \tan^{-1}\left(\frac{1}{2}\right)$

$\alpha = 26.57°$

(iii) Method of Joints

Applying conditions of equilibrium to each joint.

Joint *A*

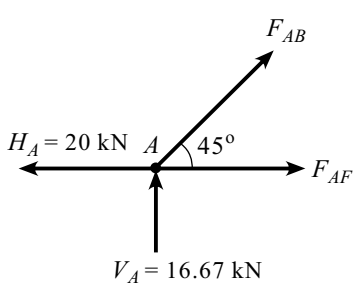

$\Sigma F_y = 0$

$16.67 + F_{AB} \sin 45^o = 0$

$\therefore F_{AB} = -23.58$ kN $= 23.58$ kN (C) ***Ans.***

$\Sigma F_x = 0$

$F_{AF} - 20 + F_{AB} \cos 45^o = 0$

$F_{AF} - 20 - 23.58 \cos 45^o = 0$

$\therefore F_{AF} = 36.67$ kN (T) ***Ans.***

Joint *F*

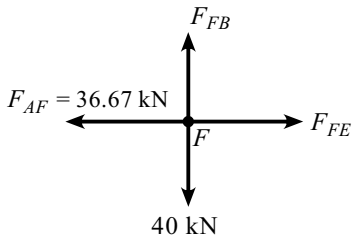

$\Sigma F_x = 0$

$F_{FE} - 36.67 = 0$

$\therefore\ F_{FE} = 36.67$ kN (T) ***Ans.***

$\Sigma F_y = 0$

$F_{FB} - 40 = 0$

$\therefore\ F_{FB} = 40$ kN (T) ***Ans.***

Joint *D*

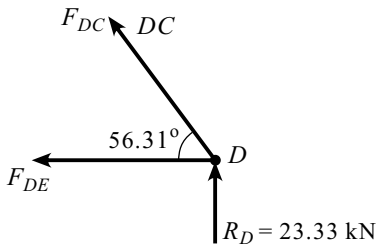

$\Sigma F_y = 0$

$23.33 + F_{DC} \sin 56.31^\circ = 0$

$\therefore\ F_{DC} = -28$ kN $= 28$ kN (C) ***Ans.***

$\Sigma F_x = 0$

$-F_{DE} - F_{DC} \cos 56.31^\circ = 0$

$-F_{DE} - (-28 \cos 56.31^\circ) = 0$

$\therefore\ F_{DE} = 15.53$ kN (T) ***Ans.***

Joint *C*

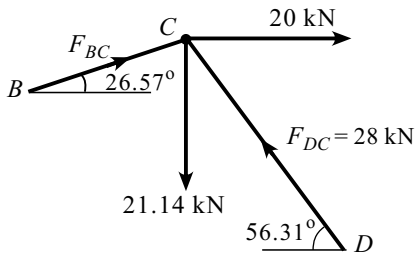

$\Sigma F_x = 0$

$F_{BC} \cos 26.57^\circ - 28 \cos 56.31^\circ + 20 = 0$

$F_{BC} = 5$ kN (T) ***Ans.***

Joint *E*

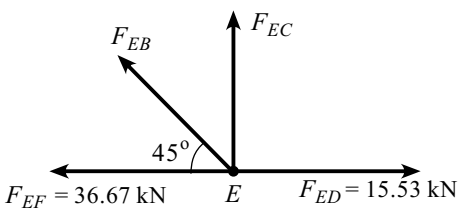

$\Sigma F_x = 0$

$15.53 - 36.67 - F_{EB} \cos 45^\circ = 0$

$\therefore\ F_{EB} = -29.9$ kN $= 29.9$ kN (C) ***Ans.***

$\Sigma F_y = 0$

$F_{EC} + F_{EB} \sin 45^\circ = 0$

$F_{EC} + (-29.9 \sin 45^\circ) = 0$

$\therefore\ F_{EC} = 21.14$ kN (T) ***Ans.***

5. (b) A stone is thrown vertically upwards and returns to the starting point at the ground in 6 sec. Find out max. height and initial velocity of stone. [06]

Solution

Motion of the stone (ground to peak)

Initial velocity $u = v_0$ m/s, $v = 0$, $s = h$, $g = -9.81$ m/s^2.

Time to reach highest point $t = \frac{1}{2} \times$ total time $= \frac{1}{2} \times 6 = 3$ sec.

$$v = u + gt$$

$$0 = v_0 - 9.81 \times 3$$

$\therefore$ Initial velocity $v_0 = 29.43$ m/s (↑) ***Ans.***

Now, $v^2 = u^2 + 2gh$

$$0 = (29.43)^2 + 2 \times (-9.81) \times h$$

$\therefore$ Maximum height $h = 44.14$ m ***Ans.***

5. (c) Explain instantaneous centre of rotation. **[06]**

Solution : Refer : *Text Book*

6. (a) Force $\overline{F}$ = (3 i – 4 j + 12 k) N acts at point A(1, –2, 3). Find : **[04]**

(i) Moment of force about origin.

(ii) Moment of force about point B(2, 1, 2) m.

Solution

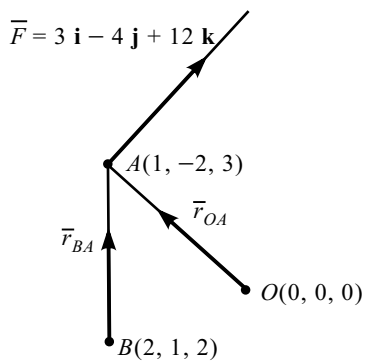

[I] Moment of force about origin

(i) Force vector

$\overline{F} = 3\,\mathbf{i} - 4\,\mathbf{j} + 12\,\mathbf{k}$

(ii) Position vector

$\overline{r}_{OA} = \mathbf{i} - 2\,\mathbf{j} + 3\,\mathbf{k}$

$$\overline{M}_O = \overline{r}_{OA} \times \overline{F} = \begin{vmatrix} \mathbf{i} & \mathbf{j} & \mathbf{k} \\ 1 & -2 & 3 \\ 3 & -4 & 12 \end{vmatrix}$$

$\therefore \overline{M}_O = (-12\,\boldsymbol{i} - 3\,\boldsymbol{j} + 2\,\boldsymbol{k})$ N.m ***Ans.***

[II] Moment of force about point B(2, 1, 2) m

(i) Force vector

$\overline{F} = 3\,\mathbf{i} - 4\,\mathbf{j} + 12\,\mathbf{k}$

(ii) Position vector

$\overline{r}_{BA} = -\,\mathbf{i} - 3\,\mathbf{j} + \mathbf{k}$

$$\overline{M}_B = \overline{r}_{BA} \times \overline{F} = \begin{vmatrix} \mathbf{i} & \mathbf{j} & \mathbf{k} \\ -1 & -3 & 1 \\ 3 & -4 & 12 \end{vmatrix}$$

$\therefore \overline{M}_B = (-32\,\boldsymbol{i} - 15\,\boldsymbol{j} - 13\,\boldsymbol{k})$ N.m ***Ans.***

6. (b) Find out minimum value of P to start the motion. **[08]**

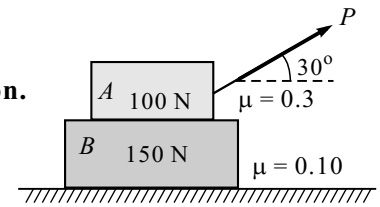

Fig. 6(b)

Solution

Case I : B is stationary w.r.t. ground and A moves.

Consider the F.B.D. of block A

(i) $\Sigma F_y = 0$

$N_1 + P \sin 30° - 100 = 0$

$N_1 = 100 - P \sin 30°$

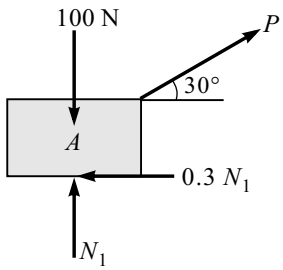

F.B.D. of Block *A*

(ii) $\Sigma F_x = 0$

$P \cos 30° - 0.3\, N_1 = 0$

$P \cos 30° - 0.3\,(100 - P \sin 30°) = 0$

$P \cos 30° - (0.3 \times 100) + 0.3\, P \sin 30° = 0$

$P\,(\cos 30° + 0.3 \sin 30°) = 0.3 \times 100$

$$P = \frac{0.3 \times 100}{\cos 30° + 0.3 \sin 30°}$$

$\therefore\ P = 29.53$ N ***Ans.***

Case II : B is stationary w.r.t. A

Consider both blocks A and B moving together.

Consider the F.B.D. of A and B together

(i) $\Sigma F_y = 0$

$N_2 - 250 + P \sin 30° = 0$

$N_2 = 250 - P \sin 30°$

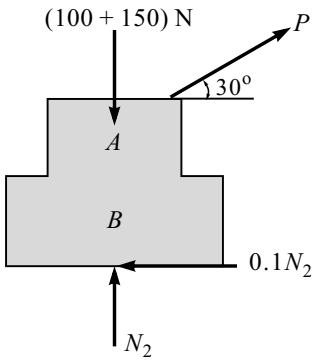

F.B.D. of Block *A* and *B* Together

(ii) $\Sigma F_x = 0$

$P \cos 30° - \mu\, N_2 = 0$

$P \cos 30° - 0.1\,(250 - P \sin 30°) = 0$

$P \cos 30° - (0.1 \times 250) + 0.1\, P \sin 30° = 0$

$P\,(\cos 30° + 0.1 \sin 30°) = 0.1 \times 250$

$$P = \frac{0.1 \times 250}{\cos 30° + 0.1 \sin 30°}$$

$\therefore\ P = 27.29$ N ***Ans.***

Minimum value of $P = 27.29$ N.

6. (c) For a particle in rectilinear motion $a = -0.05\, v^2$ m/s^2, at $v = 20$ m/s, $x = 0$. Find x at $v = 15$ m/s and acceleration at $x = 50$ m. **[04]**

Solution

$a = -0.05\, v^2$

$$\therefore\ v \frac{dv}{dx} = -0.05\, v^2$$

$$\frac{dv}{v} = -0.05\, dx$$

$$\int \frac{dv}{v} = -0.05 \int dx$$

$$\log_e v = -0.05\, x + c$$

For $x = 0$, $v = 20$ m/s $\therefore c = \log_e 20$

$$\therefore \log_e v = -0.05\, x + \log_e 20$$

At $v = 15$ m/s, $\log_e 15 = -0.05\, x + \log_e 20$

$\therefore x = 5.7536$ m ***Ans.***

For $x = 50$ m,

$$\log_e v = -0.05 \times 50 + \log_e 20$$

$$v = 1.642 \text{ m/s}$$

Given $a = -0.05\, v^2$

$\therefore a = -0.05 \times (1.642)^2 = 0.1348$ m/s^2 ***Ans.***

6. (d) Sphere *A* is supported by two wires *AB*, *AC*. Find out tension in wire *AC* : **[04]**

(i) Before *AB* is cut.

(ii) Just after *AB* is cut.

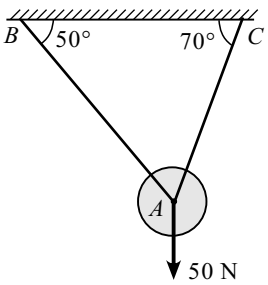

Fig. 6(d)

Solution

(i) Before *AB* is cut

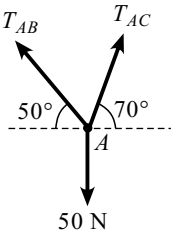

$\Sigma F_x = 0$

$-T_{AB} \cos 50° + T_{AC} \cos 70° = 0$ ..... (I)

$\Sigma F_y = 0$;

$T_{AB} \sin 50° + T_{AC} \sin 70° = 50$ ..... (II)

From (I) and (II),

$T_{AB} = 19.74$ N and $T_{AC} = 37.11$ N ***Ans.***

(ii) Just after *AB* is cut

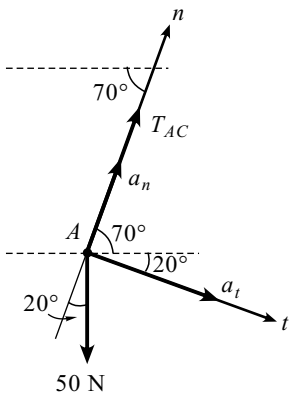

When string *AB* is cut, sphere undergoes curvilinear motion.

$$a_n = \frac{v^2}{\rho} = 0$$

$$\Sigma F_t = m\, a_t$$

$$50 \sin 20° = \frac{50}{9.81}\, a_t$$

$$a_t = 3.35 \text{ m/s}^2$$

$$a = \sqrt{a_t^2 + a_n^2} = \sqrt{3.35^2 + 0^2}$$

$a = 3.35$ m/s^2 ***Ans.***

●●●

DECEMBER - 2013

1. (a) A ring is pulled by three forces as shown in Fig. 1(a). Find the force *F* and the angle θ if resultant of these three forces is 100 N acting in vertical direction. **[04]**

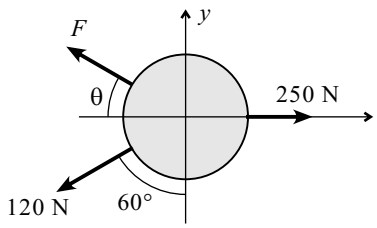

Fig. 1(a)

Solution

(i) $\Sigma F_x = 0$

$-F\cos\theta + 250 - 120\sin 60° = 0$

$-F\cos\theta = -146.07$

$F\cos\theta = 146.07$ ..... (I)

(ii) $\Sigma F_y = R$

$F\sin\theta - 120\cos 60° = 100$ ..... (II)

$F\sin\theta = 160$ ..... (II) ..... (III)

Dividing (II) by (I)

$$\frac{\sin\theta}{\cos\theta} = \frac{160}{146.07}$$

$\therefore\ \theta = 47.60°$

Putting this value in (I) we get

$F = 216.62$ N ***Ans.***

1. (b) State and prove Lami's Theorem. **[04]**

Solution : Refer : *Text Book*

1. (c) Laws of friction. **[04]**

Solution : Refer : *Text Book*

1. (d) A motorist is travelling at 90 kmph, when he observes a traffic signal 250 m ahead of him turns red. The traffic signal is timed to stay red for 12 sec. If the motorist wishes to pass the signal without stopping just as it turns green. Determine (i) The required uniform acceleration of the motor, (ii) The speed of motor as it passes the signal. **[04]**

Solution : Given : Initial velocity $u = 90$ km/hr

$$u = \frac{90 \times 5}{18} = 25 \text{ m/s}$$

Time $t = 12$ sec, Displacement $s = 250$ m

(i) $s = ut + \frac{1}{2}at^2$

$250 = 25 \times 12 + \frac{1}{2} \times a \times (12)^2$

$a = -0.6944$ m/s^2 ***Ans.***

(ii) $v = u + at$

$v = 25 + (-0.6944) \times 12 = 16.67 \text{ m/s} (\rightarrow)$

(iii) Speed of motor as it passes the signal

$v = 16.67 \times \frac{18}{5} = 60 \text{ kmph}$ ***Ans.***

1. (e) A 50 kg block kept on a 15° inclined plane is pushed down the plane with an initial velocity of 20 m/s. If $\mu_k = 0.4$, determine the distance traveled by the block and the time it will take as it comes to rest. **[04]**

Solution

(i) $\Sigma F_y = 0$

$N - 50 \times 9.81 \cos 15° = 0$

$\therefore N = 473.78 \text{ N}$

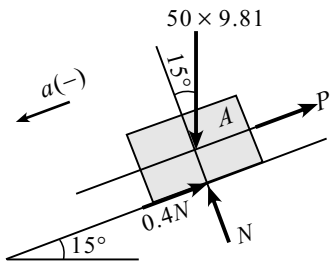

F.B.D. of Block

(ii) $\Sigma F_x = m\,a$

$0.4 \times 473.78 - 50 \times 9.81 \sin 15° = 50\,a$

$62.56 = 50\,a$

$\therefore a = 1.25 \text{ m/s}^2$

(iii) $v^2 = u^2 + 2as$

$0 = 20^2 + 2 \times (-1.25) \times s$

$s = 160 \text{ m}$ ***Ans.***

(i) $s = ut + \frac{1}{2} at^2$

$160 = 20t + \frac{1}{2} \times 1.25 \times t^2$

$\therefore t = 16 \text{ sec}$ ***Ans.***

2. (a) A member *ABC* is loaded by distributed load, and pure moment as shown in the Fig. 2(a). Find the (i) magnitude and (ii) position along *AC* of the resultant. **[06]**

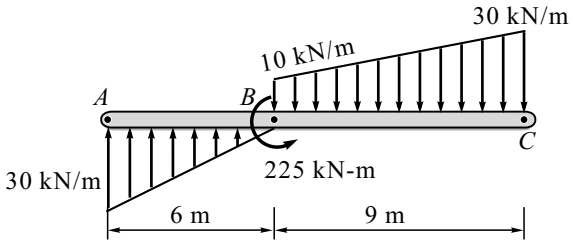

Fig. 2(a)

Solution

Consider the F.B.D. of the block

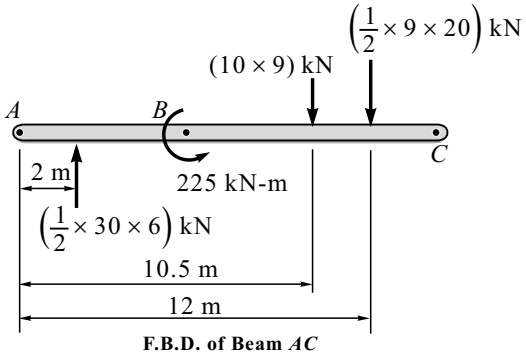

F.B.D. of Beam *AC*

(i) $\Sigma F_x = 0$

(ii) $\Sigma F_y = R$

$R = \frac{1}{2} \times 30 \times 6 - 10 \times 9 - \frac{1}{2} \times 20 \times 9$

$R = -90 \text{ kN} = 90 \text{ kN} (\downarrow)$ ***Ans.***

(iii) $\Sigma M_A = 225 - (10 \times 9)(10.5) + \frac{1}{2} \times 30 \times 6 \times 2 - \frac{1}{2} \times 20 \times 9 \times 12$

$\Sigma M_A = -1620$ N-m $= 1620$ N-m (↻) ***Ans.***

(iv) By Varignon's theorem

$d = \frac{\Sigma M_A}{\Sigma F_y} = \frac{\Sigma M_A}{R}$

$\therefore d = 18$ m ***Ans.***

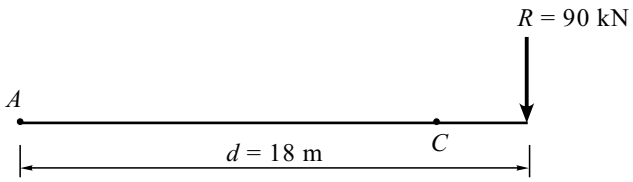

2. (b) A cylinder weighing 1000 N and 1.5 m diameter is supported by a beam *AB* of length 6 m and weight 400 N as shown in Fig. 2(b). Neglecting friction at the surfaces of contacts, determine (i) Wall reaction at *D*. (ii) Tension in the cable *BC* and (iii) Hinged reaction at support *A*. **[08]**

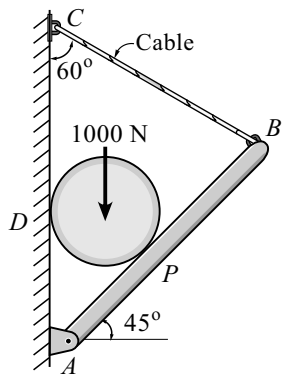

Fig. 2(b)

Solution

(i) Consider F.B.D. of cylinder

$\Sigma F_y = 0$

$R_P \cos 45^\circ - 1000 = 0$

$R_P = 1414.21$ N

$\Sigma F_x = 0$

$R_D - R_P \sin 45^\circ = 0$

$R_D = 1000$ N ***Ans.***

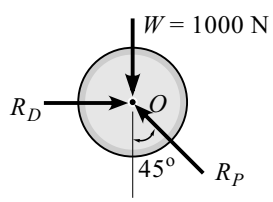

F.B.D. of Cylinder

(ii) Consider F.B.D. of beam *AB*

Reaction R_P is perpendicular to *AB*.

Draw line *AO*. *AO* forms angle bisector.

$\angle OAP = \frac{45^\circ}{2} = 22.5^\circ$

(iii) From $\Delta\, OAP$, we have $\tan 22.5^\circ = \frac{OP}{AP} = \frac{0.75}{AP}$

$AP = 1.81$ m

From $\Delta\, AGD$, we have

$AG = 3$ m

$AD = 3 \cos 45^\circ$

From $\Delta\, ABC$, we have

$AB = 6$ m

$AC = 6 \cos 45^\circ$

$BC = 6 \sin 45^\circ$

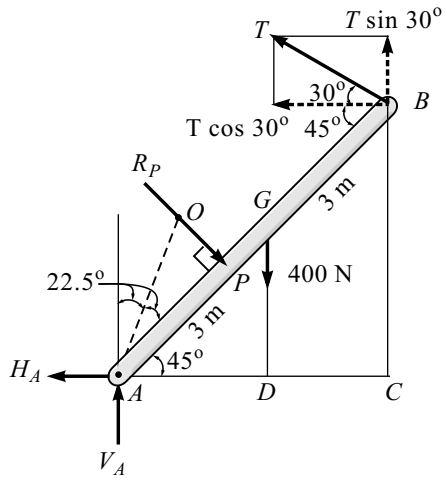

F.B.D. of Beam *AB*

(iv) $\Sigma M_A = 0$

$(T \sin 30^o)(AC) + (T \cos 30^o)(BC) - (400)(AD) - (R_P)(AP) = 0$

$(T \sin 30^o)(6 \cos 45^o) + (T \cos 30^o)(6 \sin 45) - (400)(3 \cos 45^o) - (1414.21)(1.81) = 0$

$T = 588.08$ N ***Ans.***

(v) $\Sigma F_x = 0$

$R_P \cos 45^o - H_A - T \cos 30^o = 0$

$1414.21 \cos 45^o - H_A - 588.08 \cos 30^o = 0$

$H_A = 490.7$ N (←) ***Ans.***

$\Sigma F_y = 0$

$V_A + T \sin 30^o - 400 - R_P \sin 45^o = 0$

$V_A + 588.08 \sin 30^o - 400 - 1414.21 \sin 45^o = 0$

$V_A = 1105.96$ N (↑) ***Ans.***

Reaction at A is as shown

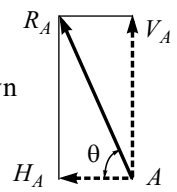

Reaction at A

(vi) $R_A = \sqrt{H_A^2 + V_A^2}$; $\theta = \tan^{-1}\left|\dfrac{V_A}{H_A}\right|$

$R_A = 1209.93$ N ; $\theta = 66.07^o$ ***Ans.***

2. (c) **A particle of mass 1 kg is acted upon by a force F which varies as shown in Fig. 2(c). If initial velocity of the particle is 10 m/s, determine (i) what is the maximum velocity attained by the particle, (ii) time when particle will be at the point of reversal.** **[06]**

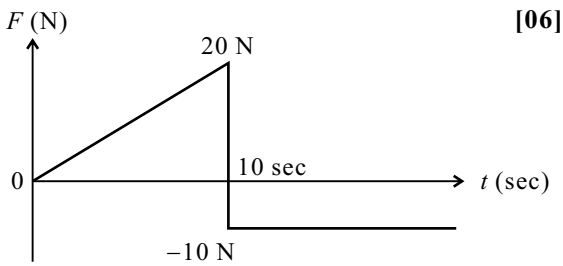

Fig. 2(c)

Solution

(i) For v_{max}

At force $F = 20$ N the velocity of particle will be maximum

Change in velocity $= \dfrac{\text{Area under } F\text{-}t \text{ curve}}{\text{Mass}}$

$v_{max} - 10 = \dfrac{\frac{1}{2} \times 10 \times 20}{1}$

$\therefore\ v_{max} = 110$ m/s ***Ans.***

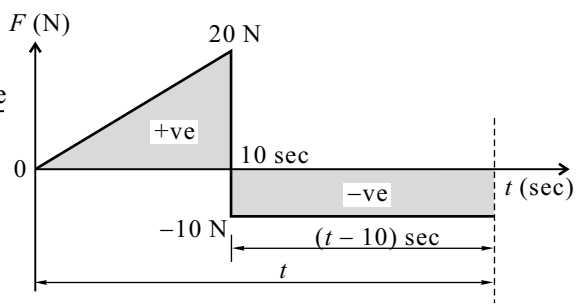

(ii) Let t be the time when body will be at the point of reversal, where velocity $v = 0$

Change in velocity $= \dfrac{\text{Area under } F\text{-}t \text{ curve}}{\text{Mass}}$

$$0 - 10 = \frac{\frac{1}{2} \times 10 \times 20 - 10\,(t - 10)}{1}$$

$$-10 = 100 - 10\,t + 100$$

$$t = 21 \text{ sec} \quad \textbf{\textit{Ans.}}$$

3. (a) Locate the centroid of the shaded area. **[08]**

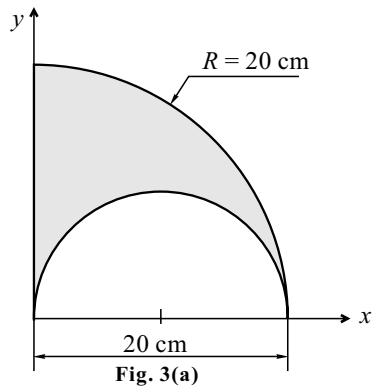

Fig. 3(a)

Solution : Refer : *Text Book - Pg. 5.12, Problem 6.*

3. (b) A pole is held in place by three cables. If the force of each cable acting on the pole is as shown in Fig. 3(b), determine the resultant. **[06]**

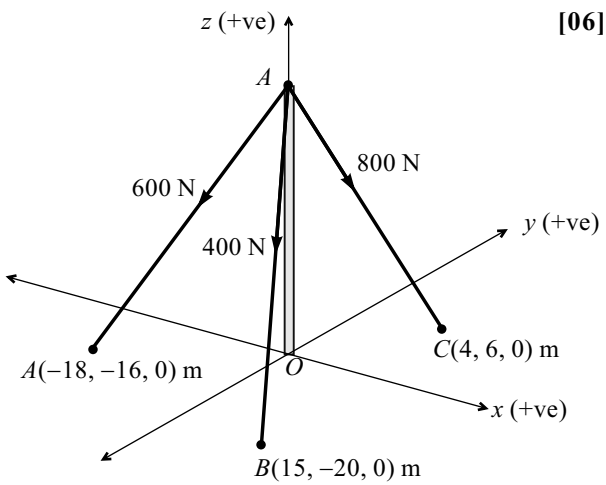

Fig. 3(b)

Solution

(i) Force vector

$$\overline{\boldsymbol{F}}_1 = (F_1)(\overline{\boldsymbol{e}}_{DA})$$

$$\overline{\boldsymbol{F}}_1 = 600 \left[\frac{-18\,\mathbf{i} - 16\,\mathbf{j} - 24\,\mathbf{k}}{\sqrt{18^2 + 16^2 + 24^2}}\right]$$

$$\overline{\boldsymbol{F}}_1 = 17.64(-18\,\mathbf{i} - 16\,\mathbf{j} - 24\,\mathbf{k})$$

$$\overline{\boldsymbol{F}}_1 = -317.52\,\mathbf{i} - 282.24\,\mathbf{j} - 423.36\,\mathbf{k}$$

$$\overline{\boldsymbol{F}}_2 = 400(\overline{\boldsymbol{e}}_{DB})$$

$$\overline{\boldsymbol{F}}_2 = 400 \left[\frac{15\,\mathbf{i} - 20\,\mathbf{j} - 24\,\mathbf{k}}{\sqrt{15^2 + 20^2 + 24^2}}\right]$$

$$\overline{\boldsymbol{F}}_2 = 11.54(15\,\mathbf{i} - 20\,\mathbf{j} - 24\,\mathbf{k})$$

$$\overline{\boldsymbol{F}}_2 = 173.1\,\mathbf{i} - 230.8\,\mathbf{j} - 276.96\,\mathbf{k}$$

$$\overline{\boldsymbol{F}}_3 = (F_3)(\overline{\boldsymbol{e}}_{DC})$$

$$\overline{\boldsymbol{F}}_3 = 800 \left[\frac{4\,\mathbf{i} + 6\,\mathbf{j} - 24\,\mathbf{k}}{\sqrt{4^2 + 6^2 + 24^2}}\right]$$

$\overline{F}_3 = 31.92(4\,\mathbf{i} + 6\,\mathbf{j} - 24\,\mathbf{k})$

$\overline{F}_3 = 127.68\,\mathbf{i} + 191.52\,\mathbf{j} - 766.08\,\mathbf{k}$

(iii) Resultant

We know for concurrent force system resultant is given by

$\overline{R} = \overline{F}_1 + \overline{F}_2 + \overline{F}_3$

$\overline{R} = -16.74\,\mathbf{i} - 321.52\,\mathbf{j} - 1466.4\,\mathbf{k}$ ***Ans.***

3. (c) Two blocks m_A = 10 kg and m_B = 5 kg are connected with cord and pulley system as shown in Fig. 3(c). Determine the velocity of each block when system is started from rest and block *B* gets displacement by 2 m. Take μ_k = 0.2 between block *A* and horizontal surface. **[06]**

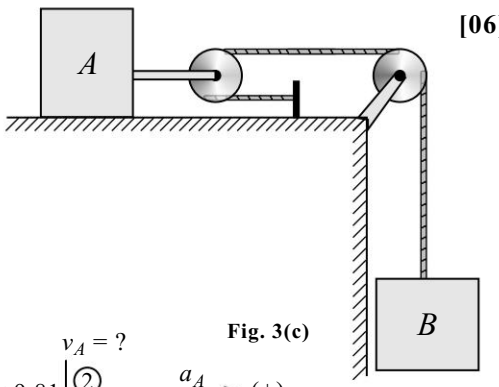

Fig. 3(c)

Solution

(i) $2T\,x_A - T\,x_B = 0$

$2\,x_A - x_B = 0$

$2\,x_A = x_B$

Differentiating w.r.t. t

$2\,v_A = v_B$

Differentiating w.r.t. t

$2\,a_A = a_B$

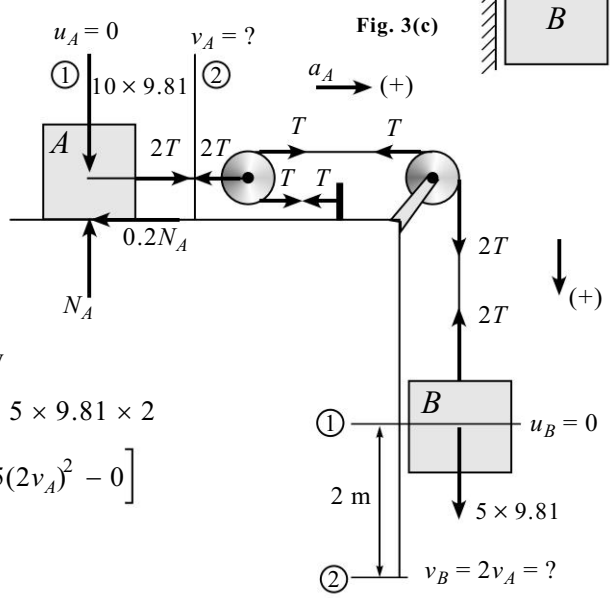

(ii) By work energy principle

Work done = Change in kinetic energy

$$-0.2 \times 10 \times 9.81 \times 1 + 2T \times 1 - T \times 2 + 5 \times 9.81 \times 2$$

$$= \left[\frac{1}{2} \times 10(v_A)^2 - 0\right] - \left[\frac{1}{2} \times 5(2v_A)^2 - 0\right]$$

$\therefore\ v_A = 2.287$ m/s ***Ans.***

$\therefore\ v_B = 2\,v_A = 4.574$ m/s ***Ans.***

4. (a) Find the support reactions at *A* and *B* for the beam shown in Fig. 4(a). **[08]**

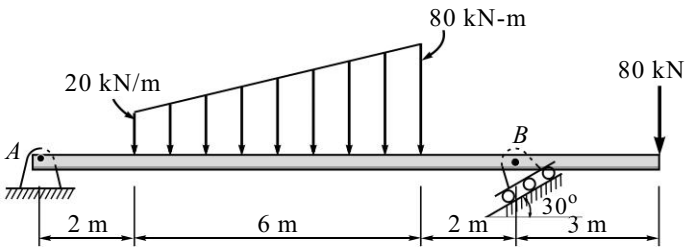

Fig. 4(a)

Solution

(i) Consider the F.B.D. of beam AB

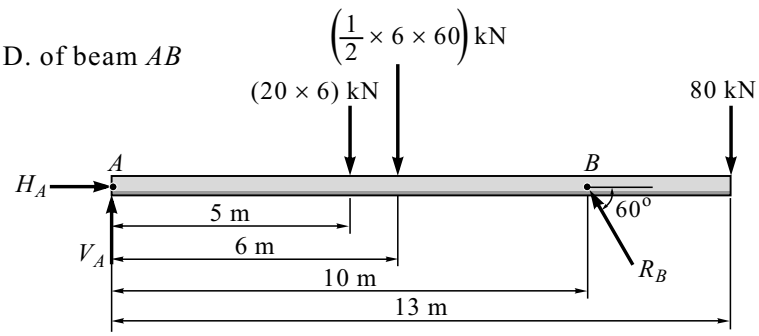

F.B.D. of Beam *AB*

(ii) $\Sigma M_A = 0$

$$-20 \times 6 \times 5 - \frac{1}{2} \times 60 \times 6 \times 6 + R_B \sin 60^\circ \times 10 - 80 \times 13 = 0$$

$R_B = 314$ kN $(60^\circ \nwarrow)$

(iii) $\Sigma F_x = 0$

$H_A - 314 \cos 60^\circ = 0$

$H_A = 157$ kN $(\rightarrow)$

(iv) $\Sigma F_y = 0$

$$V_A - 20 \times 6 - \frac{1}{2} \times 60 \times 6 + R_B \sin 60^\circ - 80 = 0$$

$V_A = 108$ kN $(\uparrow)$

(v) $R_A = \sqrt{H_A^2 + V_A^2} = \sqrt{157^2 + 108^2}$

$R_A = 190$ kN

(vi) $\theta = \tan^{-1}\left|\frac{V_A}{H_A}\right|$

$\theta = 34.52^\circ$ ***Ans.***

4. (b) A ball is thrown from horizontal level, such that it clears a wall 6 m high, situated at a horizontal distance of 35 m. If the angle of projection is 60° with respect to the horizontal, what should be the minimum velocity of projection? **[06]**

Solution : Refer : *Text Book - Pg. 11.24, Problem 16*

4. (c) '*C*' is a uniform cylinder to which a rod '*AB*' is pinned at '*A*' and the other end of the rod '*B*' is moving along a vertical wall as shown in Fig. 4(c). If the end '*B*' of the rod is moving upward along the wall at a speed of 3.3 m/s find the angular velocity of the cylinder assuming that it is rolling without slipping. **[06]**

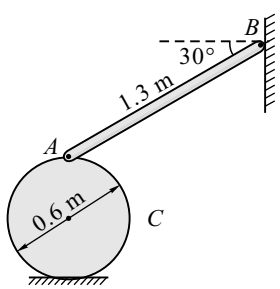

Fig. 4(c)

Solution : Refer : *Text Book - Pg. 12.33, Problem 29*

5. (a) Find the forces in members *BD*, *BE* and *CE* by method of section only for the truss shown in Fig. 5(a). Also find the forces in other members by method of joints. **[08]**

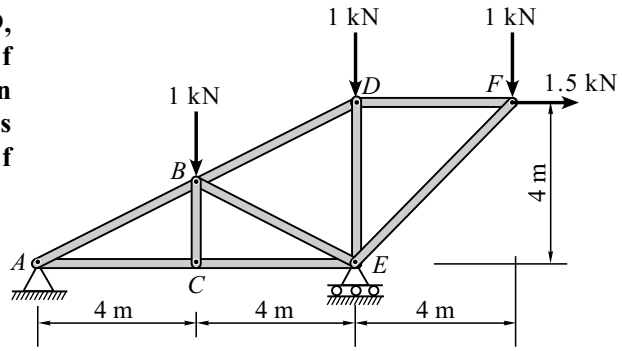

Fig. 5(a)

Solution

(i) $\Sigma M_A = 0$

$-1 \times 4 - 1 \times 8 + R_E \times 8 - 1 \times 12 - 1.5 \times 4 = 0$

$R_E = 3.75$ kN (↑)

(ii) $\Sigma F_y = 0$

$V_A + R_E - 1 - 1 - 1 = 0$

$V_A = -0.75$ kN

$V_A = 0.75$ kN (↓)

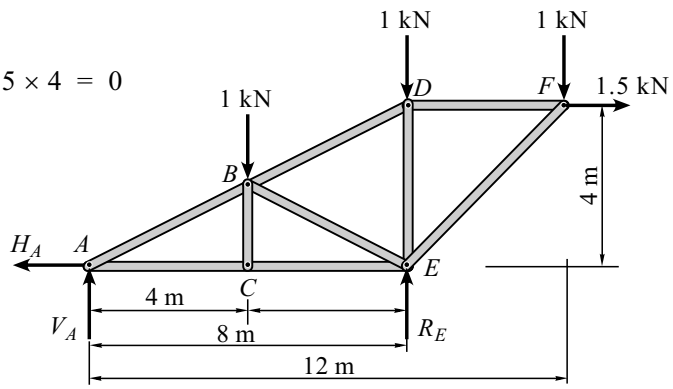

F.B.D. of Truss

(iii) $\Sigma F_x = 0$

$-H_A + 1.5 = 0$

$H_A = 1.5$ kN (←)

[I] Method of Section

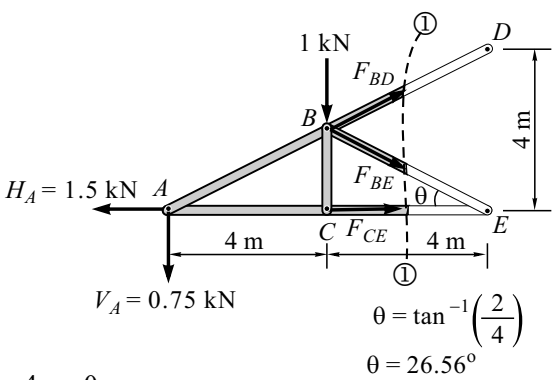

(i) $\Sigma M_B = 0$

$F_{CE} \times 2 - V_C \times 4 - H_A \times 2 = 0$

$F_{CE} = -3$ kN

$F_{CE} = 3$ kN (C) ***Ans.***

(ii) $\Sigma M_A = 0$

$-1 \times 4 - F_{BE} \cos 26.57° \times 2 - F_{BE} \sin 26.57° \times 4 = 0$

$F_{BE} = -1.11$ kN

$F_{BE} = 1.11$ kN (C) ***Ans.***

(iii) $\Sigma M_E = 0$

$-V_A \times 8 + 1 \times 4 - F_{BD} \cos 26.57° \times 2 - F_{BD} \sin 26.57° \times 4 = 0$

$F_{BD} = 2.79$ kN (T) ***Ans.***

[II] Method of Joint

(i) Join *F*

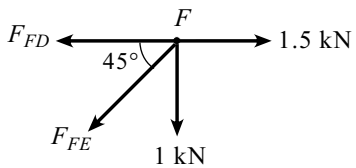

$\Sigma F_y = 0$

$-F_{FE} \sin 45° - 1 = 0$

$F_{FE} = -1.41$ kN $= 1.41$ kN (C) ***Ans.***

$\Sigma F_x = 0$

$-F_{FE} \cos 45° - F_{FD} + 1.5 = 0$

$F_{FD} = 2.5$ kN (T) ***Ans.***

(ii) Join *D*

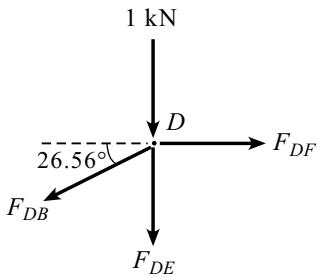

$\Sigma F_x = 0$

$F_{DF} - F_{DB}\, 26.56° = 0$

$F_{DB} = 2.79$ kN (T) ***Ans.***

$\Sigma F_y = 0$

$-1 - F_{DE} - F_{DB} \sin 26.56° = 0$

$F_{DE} = -2.11$ kN $= 2.11$ kN (C) ***Ans.***

(iii) Join *A*

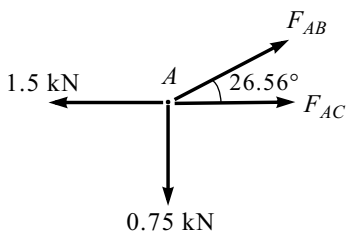

$\Sigma F_y = 0$

$F_{AB} \sin 26.56° - 0.75 = 0$

$F_{AB} = 1.67$ kN (T) ***Ans.***

$\Sigma F_x = 0$

$F_{AB} \cos 26.56° + F_{AC} - 1.5 = 0$

$F_{AC} = 6.24 \times 10^{-3}$ kN (T) ***Ans.***

(iv) Join *B*

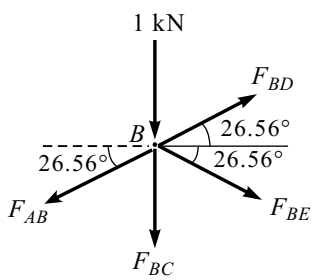

$\Sigma F_x = 0$

$F_{BD} \cos 26.56° + F_{BE} \cos 26.56° - F_{AB} \cos 26.56° = 0$

$F_{BE} = -1.12$ kN $= 1.12$ kN (C) ***Ans.***

5. (b) In Asian games, for 100 m event an athlete accelerates uniformly from the start to his maximum velocity in a distance of 4 m and runs the remaining distance with that velocity. If the athlete finishes the race in 10.4 sec, determine (i) his initial acceleration, (ii) his maximum velocity. [06]

Solution : Refer : *Text Book - Pg. 10.15, Problem 5*

5. (c) In Fig. 5(c), collar *C* slides on a horizontal rod. In the position shown rod *AB* is horizontal and has angular velocity of 0.6 rad/sec clockwise. Determine angular velocity of *BC* and velocity of collar *C*. **[06]**

Solution : Refer : *Text Book - Pg. 12.23, Problem 17*

6. (a) A force of 10 kN acts at a point *P*(2, 3, 5) m and has its line of action passing through *Q*(10, –3, 4) m. Calculate moment of this force about a point *S*(l, –10, 3) m. **[04]**

Solution

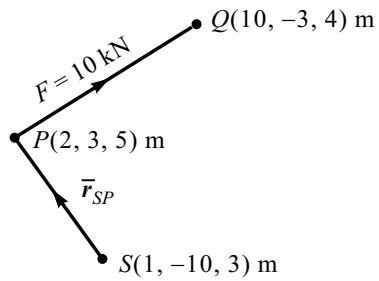

(i) Position vector

$\bar{r}_{SP} = \mathbf{i} + 13\,\mathbf{j} + 2\,\mathbf{k}$

(ii) Force vector

$\bar{F} = (F)(\bar{e}_{PQ})$

$$\bar{F} = (10)\left(\frac{8\,\mathbf{i} - 6\,\mathbf{j} - \mathbf{k}}{\sqrt{8^2 + 6^2 + 1^2}}\right)$$

$\bar{F} = 7.96\,\mathbf{i} - 5.97\,\mathbf{j} - 0.995\,\mathbf{k}$

(iii) $\bar{M}_S = \bar{r}_{SP} \times \bar{F}$

$$\bar{M}_S = \begin{vmatrix} \mathbf{i} & \mathbf{j} & \mathbf{k} \\ 1 & 13 & 2 \\ 7.96 & -5.97 & -0.995 \end{vmatrix}$$

$\bar{M}_S = -0.995\,\mathbf{i} + 16.92\,\mathbf{j} - 109.45\,\mathbf{k}$ ***Ans.***

6. (b) Find the necessary force to raise a heavy stone block of 2000 N. Take coefficient of friction as 0.25 for all surfaces. Neglect the weight of wedge. Take angle of wedge as 15°. **[08]**

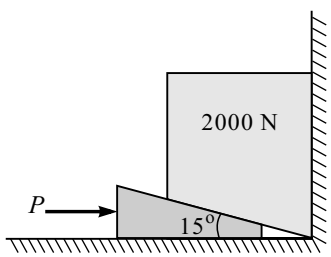

Fig. 8.24

Solution

(i) Consider F.B.D. of Upper Block

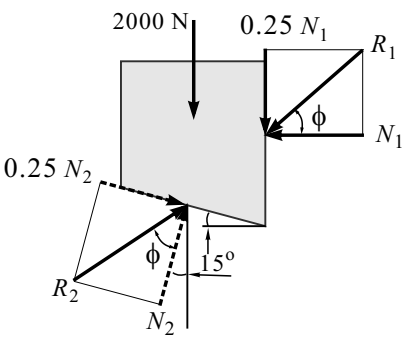

F.B.D. of Upper Block

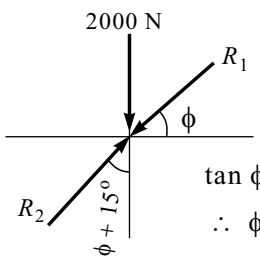

$\tan\phi = \mu = 0.25$

$\therefore\ \phi = 14.04^\circ$

By Lami's theorem, we have

$$\frac{2000}{\sin 133.08} = \frac{R_2}{\sin 75.96}$$

$\therefore\ R_2 = 2656.42$ N

(ii) Consider F.B.D. of Lower Block (Wedge)

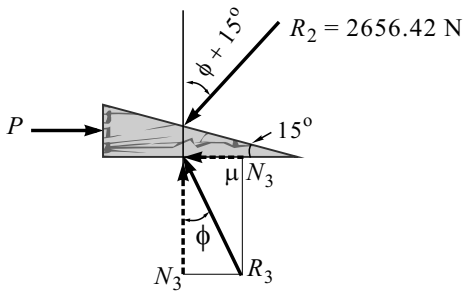

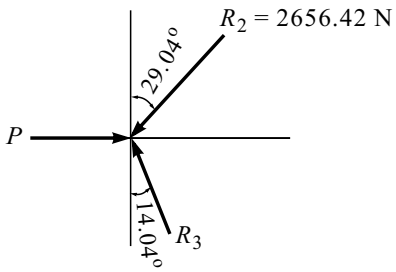

F.B.D. of Lower Block (Wedge)

By Lami's theorem, we have

$$\frac{P}{\sin 136.92} = \frac{2656.42}{\sin 104.04}$$

$\therefore\ P = 1870.26$ N ***Ans.***

6. (c) A ship *A* travels in the north making an angle of 45° to West with velocity of 18 km/hr and ship *B* travels in the East with a velocity 9 km/hr. Find the relative velocity of *B* w.r.t. ship *A*. **[04]**

Solution : Refer : *Text Book - Pg. 11.44, Problem 36*

6. (d) A body of mass 25 kg resting on a horizontal table is connected by string passing over a smooth pulley at the edge of the table to another body of mass 3.75 kg and hanging vertically as shown. Initially, the friction between the mass *A* and the table is just sufficient to prevent the motion. If an additional 1.25 kg is added to the 3.75 kg mass, find the acceleration of the masses. **[04]**

Solution : Refer : *Text Book - Pg. 13.12, Problem 9*

●●●

MAY - 2014

1.(a) Two concurrent forces *P* and *Q* acts at *O* such that their resultant acts along *x*-axis. Determine the magnitude of *Q* and hence the resultant. **[04]**

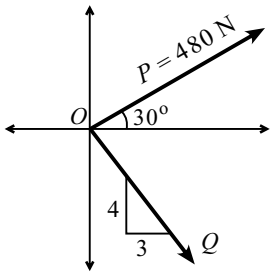

Fig. 1(a)

Solution

(i) $\Sigma F_y = 0$

$480 \sin 30^o - Q \cos 36.87^o = 0$

$Q = 300$ kN ***Ans.***

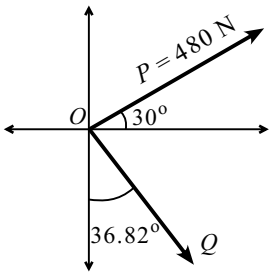

(ii) $\Sigma F_x = R$

$R = 480 \cos 30^o + 300 \sin 36.87^o$

$R = 595.69$ kN ***Ans.***

1. (b) A cylinder with 1500 N weight is resting in an unsymmetrical smooth groove as shown in Fig. 1(b). Determine the reactions at the points of contacts. **[04]**

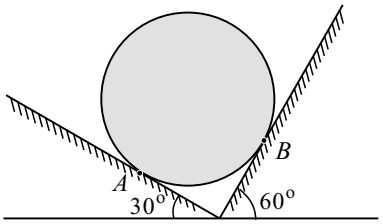

Fig. 1(b)

Solution

(i) Consider the F.B.D. of the cylinder.

(ii) By Lami's theorem, we have

$$\frac{1500}{\sin 90^o} = \frac{R_A}{\sin 120^o} = \frac{R_B}{\sin 150^o}$$

$R_A = 1299.04$ N $(\angle 60°)$ ***Ans.***

$R_B = 1060.66$ N $(30°\angle)$ ***Ans.***

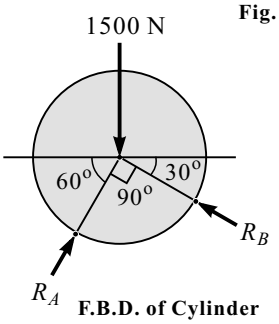

F.B.D. of Cylinder

1. (c) Explain angle of friction, angle of repose and the relation between the two. **[04]**

Solution : Refer : *Text Book - Article 8.4*

1. (d) A sprinter in a 100 m race accelerates uniformly for the first 35 m and then runs with constant velocity. If the splinter's time for the first 35 m is 5.4 seconds, determine his time for the race. **[04]**

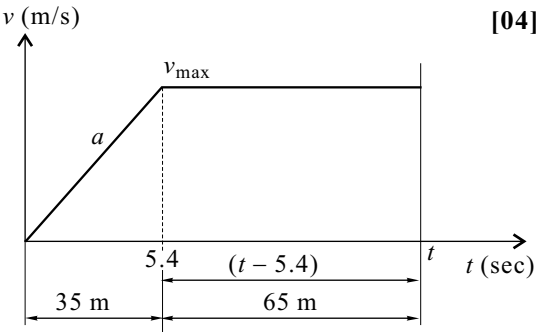

Solution

Consider the *v-t* diagram

(i) Let t be the time taken by athlete to attain maximum velocity (v_{max}) in a distance of 35 m.

$\therefore$ Time taken for remaining distance 65 m will be $(t - 5.4)$.

Area under v-t diagram is displacement, so we have

$$35 = \frac{1}{2} \times 5.4 \times v_{max}$$

$\therefore$ $v_{max} = 12.96$ m/s ***Ans.***

(ii) $65 = v_{max}(t - 5.4)$

$\therefore$ $t = 10.41$ sec ***Ans.***

1. (e) A motorist travelling at a speed of 90 kmph suddenly applies the brakes and comes to rest after skidding 100 m. Determine the time required for the car to stop and coefficient of kinetic friction between the tires and the road. **[04]**

Solution

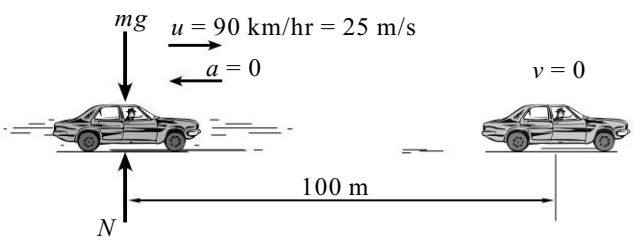

(i) By Newton's second law

$\Sigma F_x = ma_x$

$\mu mg = ma$

$a = \mu g$

(ii) $v^2 = u^2 + 2as$

$0^2 = 25^2 + 2(\mu g) \times 100$

$$\mu = \frac{625}{200 \times 9.81}$$

$\mu = 0.3185$

(iii) $v = u + at$

$0 = 25 + (-\mu g) \times t$

$$t = \frac{25}{\mu g} = \frac{25}{0.3185 \times 9.81}$$

$\therefore$ $t = 8$ sec ***Ans.***

2. (a) A system of forces acting on a bell crank is as shown in Fig. 2(a). Determine the magnitude, direction and the point of application of the resultant w.r.t. *O*. **[06]**

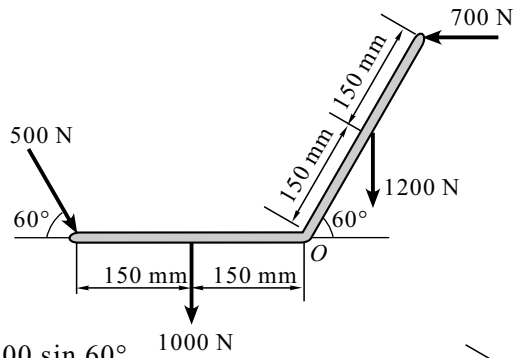

Fig. 2(a)

Solution

(i) $\Sigma M_O = 500 \sin 60° \times 30 + 100 \times 150 - 1200 \times 150 \cos 60° + 700 \times 300 \sin 60°$

$\Sigma M_O = 371769$ N.mm (↻) ***Ans.***

(ii) $\Sigma F_x = 500 \cos 60° - 700$

$\Sigma F_x = -450$ N $= 450$ N (←)

(iii) $\Sigma F_y = -500 \sin 60° - 700 = -2633$ N

$\Sigma F_y = 2633$ N (↓)

(iii) $R = \sqrt{(450)^2 + (2633)^2} = 2671.17$ N ***Ans.***

(iv) $\theta = \tan^{-1}\left(\frac{2633}{450}\right) = 80.30°$ ***Ans.***

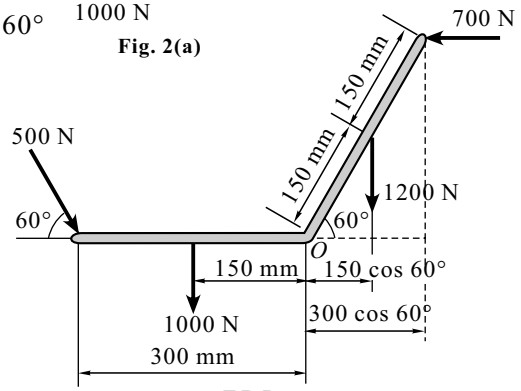

F.B.D.

2. (b) Two cylinders are kept in a channel as shown in Fig. 2(b). Determine the reactions at all the contact points *A*, *B*, *C* and *D*. Assume all surfaces smooth. **[08]**

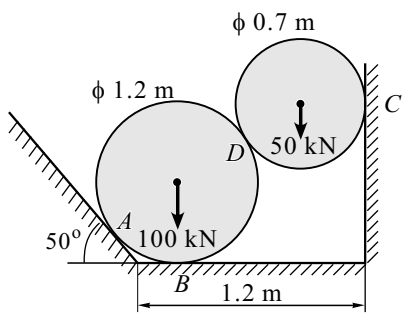

Fig. 2(b)

Solution

(i) From F.B.D.

$\tan 65° = \frac{0.6}{x}$ $\therefore x = 0.28$ m

$x + d + 0.35 = 1.2$

$\therefore d = 0.57$ m

$\cos \phi = \frac{d}{0.95} = \frac{0.57}{0.95}$ $\therefore \phi = 53.13°$

(ii) Consider the F.B.D. of 50 kN cylinder

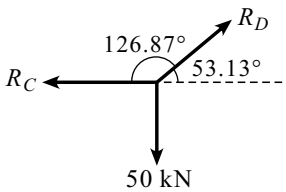

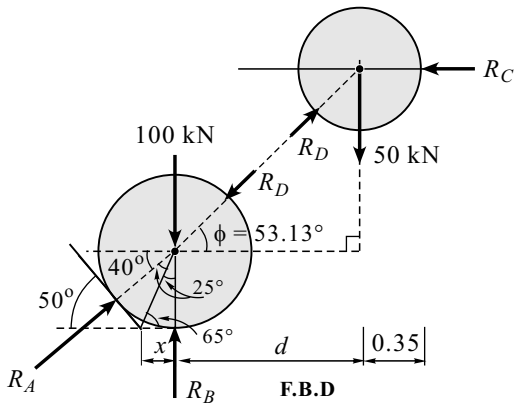

F.B.D

By Lami's theorem,

$$\frac{50}{\sin 126.87^\circ} = \frac{R_D}{\sin 90^\circ} = \frac{R_C}{\sin 143.13^\circ}$$

$\therefore R_D = 62.50$ N $(\measuredangle 53.13^\circ)$ and $R_C = 37.50$ N $(\leftarrow)$ ***Ans.***

(iii) Consider the F.B.D. of 100 kN cylinder

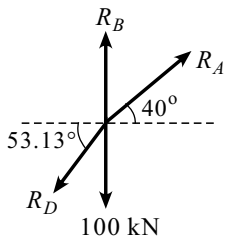

$\Sigma F_x = 0$

$R_A \cos 40^\circ - R_D \cos 53.13^\circ = 0$

$R_A = 48.95$ N $(\measuredangle 40^\circ)$ ***Ans.***

$\Sigma F_y = 0$

$R_A \sin 40^\circ + R_B - R_D \sin 53.13^\circ - 100 = 0$

$R_B = 118.53$ N $(\uparrow)$ ***Ans.***

2. (c) A ball of mass '*m*' hits directly to a similar ball of mass '*m*' which is at rest. The velocity of first ball after impact is zero. Half of the initial kinetic energy is lost in impact. Find coefficient of restitution. **[06]**

Solution

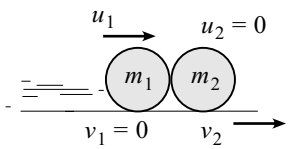

(i) $m_1u_1 + m_2u_2 = m_1v_1 + m_2v_2$

$u_1 + u_2 = v_1 + v_2$

$\therefore u_1 = v_2$

(ii) $e = -\left[\dfrac{v_2 - v_1}{u_2 - u_1}\right]$

$e = -\left[\dfrac{u_1 - 0}{0 - u_1}\right]$

$\therefore e = 1$

3. (a) Determine the Centre of gravity of the shaded area. **[08]**

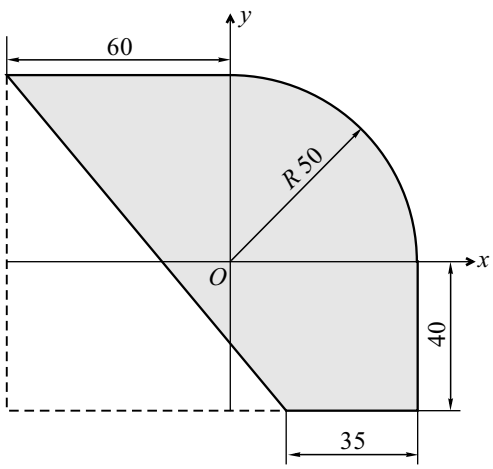

Fig. 3(a)

Solution

(i) Divide the figure into four parts as shown.

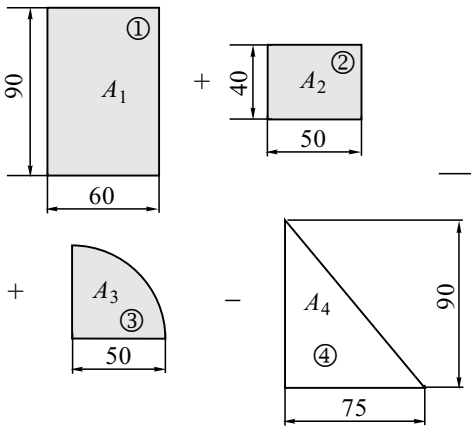

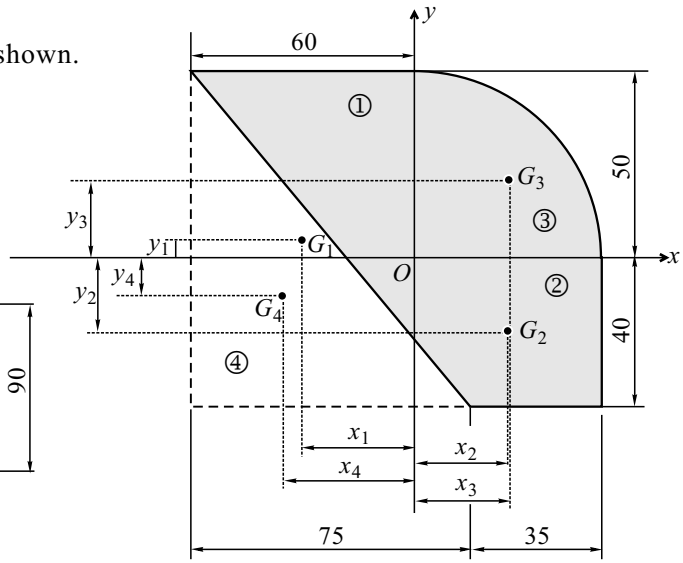

(ii) Consider rectangle - part ①

$A_1 = 90 \times 60 = 5400 \text{ unit}^2$; $x_1 = -30$; $y_1 = 5$

(iii) Consider rectangle - part ②

$A_2 = 50 \times 40 = 2000 \text{ unit}^2$; $x_2 = 25$; $y_2 = -20$

(iv) Consider quarter circle - part ③

$$A_3 = \frac{\pi \times 50^2}{4} = 1962.5 \text{ unit}^2 ; x_3 = y_3 = \frac{4 \times 50}{3\pi} = 21.23$$

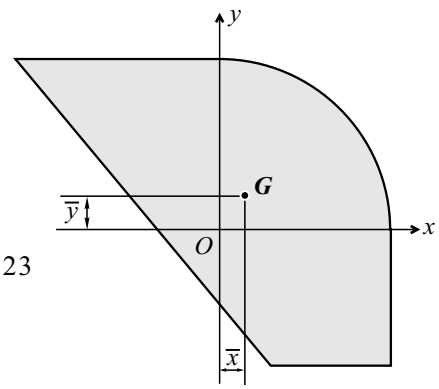

(v) Consider triangle - part ④ .

$$-A_4 = -\frac{1}{2} \times 75 \times 90 = -1687.5 \text{ unit}^2 ; x_4 = -35 \text{ cm} ; y_4 = -10 \text{ cm}$$

(vi) Coordinates of the centroid of given shaded area can be calculated as

$$\bar{x} = \frac{(5400 \times -30) + 2000 \times 25 + 1962.5 \times 21.23 + (-1687.5 \times -35)}{5400 + 2000 + 1962.5 + (-1687.5)} = 7.98$$

$$\bar{y} = \frac{(5400 \times 5) + 2000 \times (-20) + 1962.5 \times 21.23 + (-1687.5 \times -10)}{5400 + 2000 + 1962.5 + (-1687.5)} = 10.4$$

$\therefore$ Coordinates of centroid w.r.t. origin O are $\boldsymbol{G}$ (7.98, 10.4) cm. ***Ans.***

3. (b) The lines of action of three forces concurrent at origin 'O' pass respectively through points A(1, 2, 4), B(3, 0, –3) and C(2, –2, 4) m. The magnitude of force are 40 N, 10 N and 30 N respective. Determine the magnitude and direction of their resultant. **[06]**

Solution : Refer : *Text Book - Pg. 4.14, Problem 10*

3. (c) A 30 N block is released from rest. It slides down a rough incline having coefficient of friction 0.25. Determine the maximum compression of the spring. **[06]**

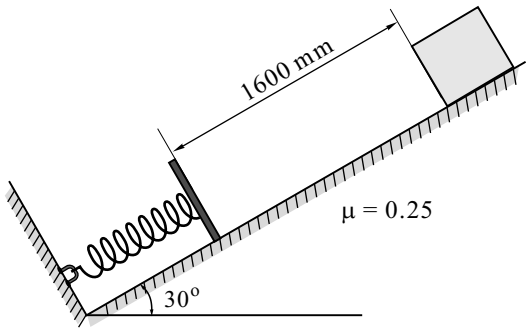

Fig. 3(c)

Solution

(i) Maximum compression of the spring

Let x be the maximum deformation of spring at position ② where the block comes to rest ($v_2 = 0$).

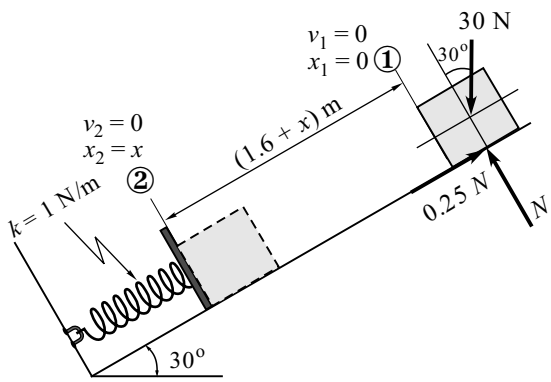

By work N energy principle, we have

Work done = Change in kinetic energy

$$\frac{1}{2} \times 1(0^2 - x^2) + 30 \sin 30^\circ (1.6 + x) - 0.25 \times 30 \cos 30^\circ (1.6 + x) = 0 - 0$$

$\therefore\ x = 1.78$ m ***Ans.***

4. (a) Find the support reaction at *B* and the load *P*, for the beam shown in Fig. 4(a) if the reaction at support *A* is zero. **[08]**

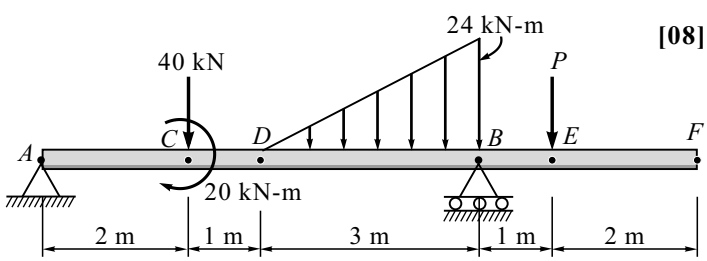

Fig. 4(a)

Solution

(i) Consider the F.B.D. of beam *AF*.

(ii) $\Sigma F_y = 0$

$V_A + R_B - 40 - 36 - P = 0$ ($V_A = 0$ given)

$R_B - P = 76$ ...(I)

(iii) $\Sigma M_A = 0$

$R_B \times 6 - 40 \times 2 - 20 - 36 \times 5 - P \times 7 = 0$

$6 R_B - 7 P = 280$ ...(II)

(iv) Solving Eqs. (I) and (II)

$R_B = 252$ kN (↑) ***Ans.***

(v) From Eq. (I)

$P = 252 - 76$

$P = 176$ kN (↓) ***Ans.***

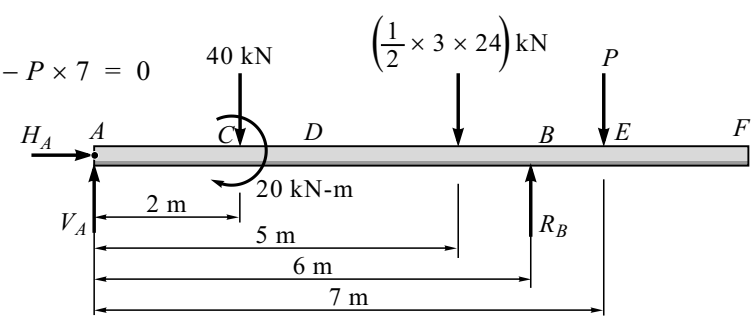

F.B.D of Beam *AF*

4. (b) A gunman fires a bullet with a velocity of 100 m/s, 50° upwards from the top of a hill 300 m high to hit a bird. The bullet misses its target and finally lands on the ground. Calculate (a) the maximum height reached by the bullet above the ground (b) total time of flight (c) velocity with which the bullet hits the ground. **[06]**

Solution

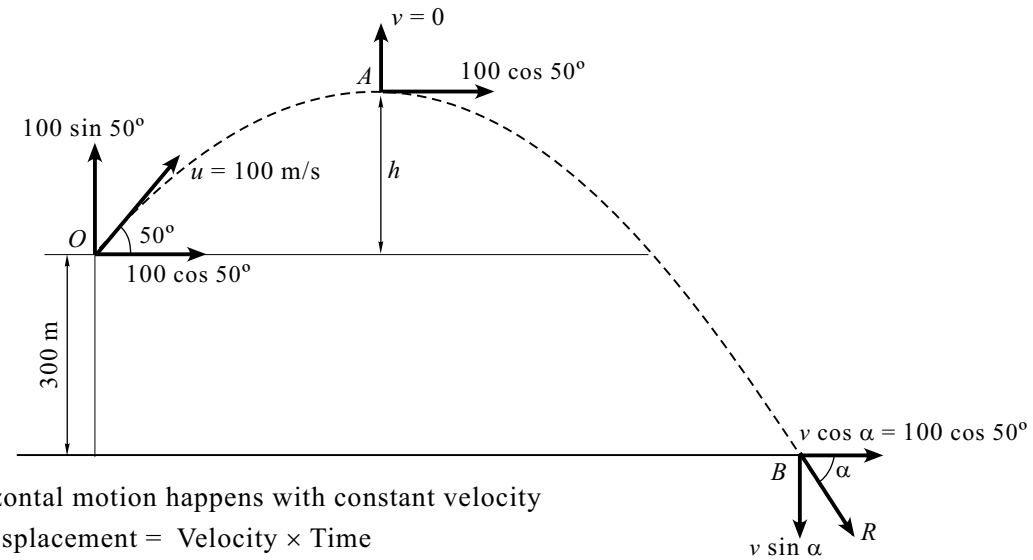

(i) Horizontal motion happens with constant velocity

$\therefore$ Displacement = Velocity × Time

(ii) Consider vertical motion from O to A

$v^2 = u^2 + 2gh$

$0 = (100 \sin 50^\circ)^2 + 2 \times (-9.81) \times h$

$h = 299.09$ m

$H_{max} = 300 + 299.09 = 599.09$ m

(iii) Consider motion from O to B

$h = ut + \frac{1}{2}gt^2$

$-300 = 100 \sin 50^\circ \times t - \frac{1}{2} \times 9.81 \times t^2$

$t = 18.86$ sec

(iv) Consider vertical motion

$v = u + gt$

$-v \sin \alpha = 100 \sin 50^\circ + (-9.81) \times t$

$-v \sin \alpha = -108.41$ ... (I)

(v) Consider horizontal motion

$v \cos \alpha = 100 \cos 50^\circ$ ... (II)

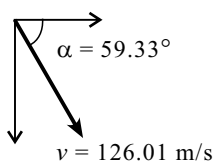

Dividing (I) by (II), we get

$\alpha = 59.33^\circ$

$v = 126.01$ m/s $\left(\searrow \alpha\right)$ ***Ans.***

4. (c) In the mechanism shown in Fig. 4(c), the angular velocity of link *AB* is 5 rad/sec anticlockwise. At the instant shown, determine the angular velocity of link *BC* and velocity of piston *C*. **[06]**

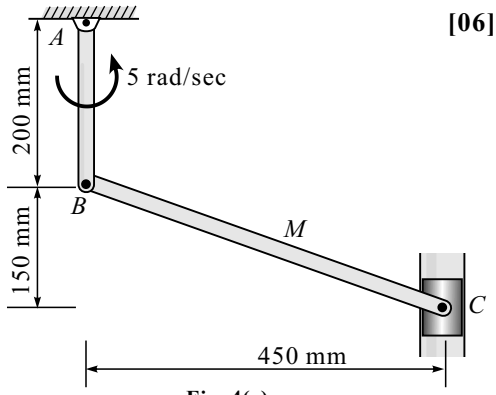

Fig. 4(c)

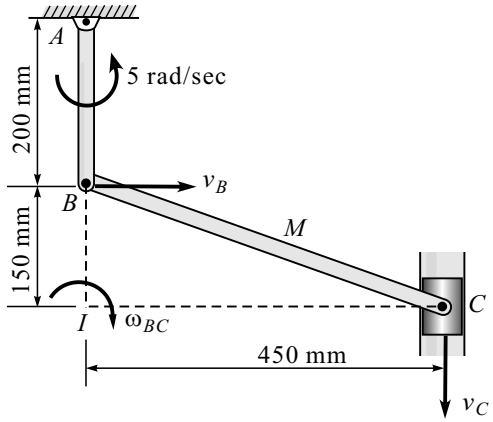

Solution

(i) Rod *AB*

$v_B = (AB)\,\omega_{AB} = 200 \times 5$

$v_B = 1000$ mm/sec (→)

(ii) Rod *BC*

At the given instant point *I* is the ICR

$v_B = (IB)\,\omega_{BC}$

$\omega_{BC} = \dfrac{1000}{150}$

$\omega_{BC} = 6.67$ r/s (↻) ***Ans.***

$v_C = (IC)\,\omega_{BC}$

$v_C = 450 \times 6.67 = 3001$ mm/s (↓) ***Ans.***

5. (a) Determine the support reactions and forces in members *AE*, *BC* and *EC* for the truss shown in Fig. 5(a). **[08]**

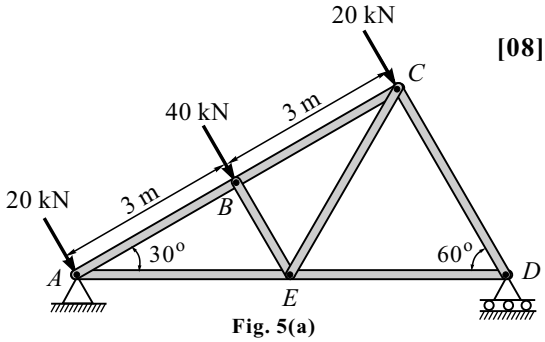

Fig. 5(a)

Solution

(i) In Δ *ADC*

$\sin 60^\circ = \dfrac{AC}{AD}$

$AD = \dfrac{6}{\sin 60^\circ}$ $\quad \therefore\ AD = 6.92$ m

$\Sigma M_A = 0$

$-40 \times 2 - 20 \times 4 + R_D \times 6.92 = 0$

$R_D = 34.68$ kN (↑) ***Ans.***

$\Sigma F_y = 0$

$-20 \cos 30^\circ - 40 \cos 30^\circ$
$\quad - 20 \cos 30^\circ + V_A + R_D = 0$

$V_A = 34.64$ kN (↑) ***Ans.***

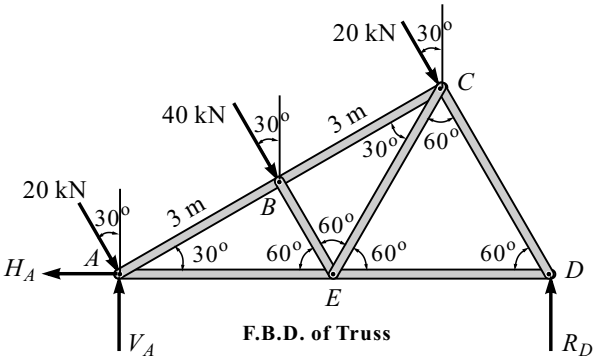

$\Sigma F_x = 0$

$-H_A + 20 \sin 30^o + 40 \sin 30^o + 20 \sin 30^o = 0$

$\therefore H_A = 40$ kN (←) ***Ans.***

(ii) Consider the F.B.D. of Joint *A*

$\Sigma F_y = 0$

$-40 \cos 30^o + 34.64 + F_{AB} \sin 30^o = 0$

$F_{AB} = -34.64$ kN (Wrong assumed direction)

$\therefore F_{AB} = 34.64$ kN (C) ***Ans.***

$\Sigma F_x = 0$

$-40 + 20 \sin 30^o + F_{AB} \cos 30^o + F_{AE} = 0$

$F_{AE} = 60$ kN (T) ***Ans.***

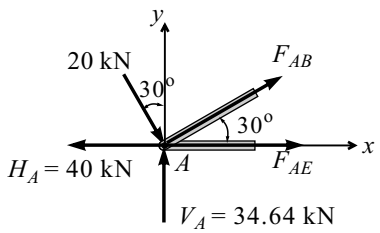

F.B.D. of *A*

(iii) Consider the F.B.D. of Joint *B*

For convenience, consider the x and y axis as shown in

$\Sigma F_x = 0$

$F_{BC} - F_{AB} = 0$

$F_{BC} = 34.64$ kN (C) ***Ans.***

$\Sigma F_y = 0$

$-40 + F_{BE} = 0$

$F_{BE} = 40$ kN (T) ***Ans.***

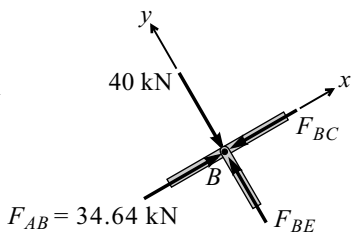

F.B.D. of *B*

(iv) Consider the F.B.D. of Joint *E*

$\Sigma F_y = 0$

$-40 \sin 60^o + F_{EC} \sin 60^o = 0$

$F_{EC} = 40$ kN (T) ***Ans.***

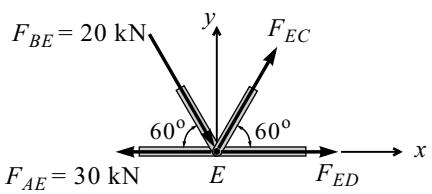

F.B.D. of *E*

5. (b) Due to slipping, points *A* and *B* on the rim of the disk have the velocities as shown in Fig. 5(b). Determine the velocities of the centre point *C* and point *D* on the rim at this instant. Take radius of disk 0.24 m. **[06]**

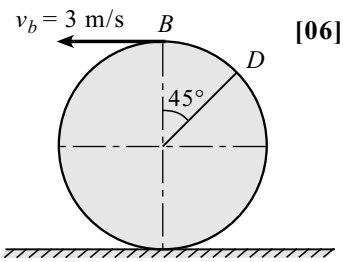

Fig. 5(b)

Solution

(i) $v_C = ?$, $v_D = ?$

$r = 0.24$ m; $d = 0.48$ m

$$\frac{3}{0.48 - l} = \frac{1.5}{l}$$

$l = 0.16$ m

$IC = y = l - 0.24$

$y = 0.08$ m

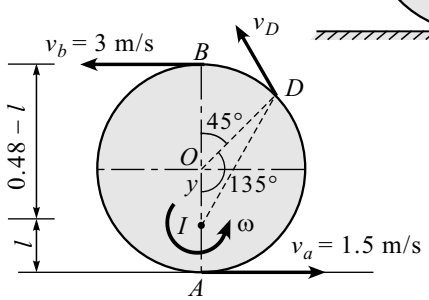

(ii) $v_A = IA\,\omega$

$\omega = \dfrac{1.5}{0.16}$

$\omega = 9.375$ rad/sec

$v_C = IC\,\omega_{disk}$

$v_C = 0.08 \times 9.375 = 0.75$ m/s (←)

$ID = \sqrt{IC^2 + 0.24 - 2\,IC \times 0.24 \times \cos 135^\circ}$

$ID = 0.302$ m

$v_D = ID\,\omega = 0.302 \times 9.375 = 2.83$ m/s (←) ***Ans.***

5. (c) A particle moves in a straight line with a velocity-time diagram shown in Fig. 5(c). If $s = -25$ m at $t = 0$, draw displacement-time and acceleration-time diagrams for 0 to 24 seconds. **[06]**

Solution : Refer : *Text Book - Pg. 10.70, Problem 60*

6. (a) The mass of A is 23 kg and mass of B is 36 kg. The coefficient of friction is 0.4 between A and B, and 0.2 between ground and block B. Assume smooth drum. Determine the maximum mass of M at impending motion. **[08]**

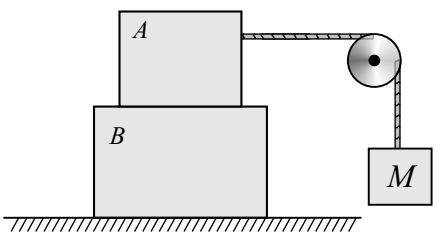

Fig. 6(a)

Solution

(i) Consider the F.B.D. of block A

$\Sigma F_y = 0$

$N_1 = 23g$

$\Sigma F_x = 0$

$mg = 0.4\,N_1$

$mg = 0.4 \times 23g$

$\therefore\ m = 9.2$ kg

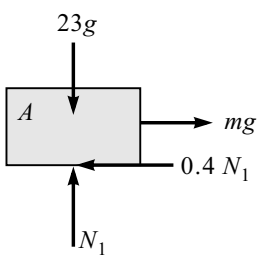

F.B.D. of Block *A*

(ii) Consider the F.B.D. of A and B together

$\Sigma F_y = 0$

$N_2 = 59g$

$\Sigma F_x = 0$

$mg = 0.2\,N_2$

$mg = 0.4 \times 59g$

$\therefore\ m = 11.8$ kg

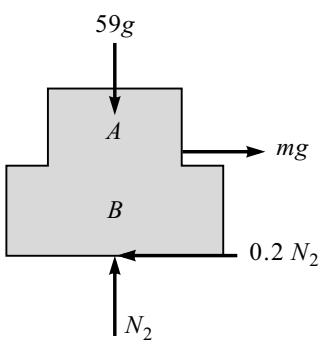

F.B.D. of Block *A* and *B* Together

$\therefore$ Maximum mass $M = 9.2$ kg of impending motion. ***Ans.***

6. (b) A force of 1200 N acts along *PQ*, *P*(4, 5, –2) and *Q* (–3, l, 6) m. Calculate its moment about a point *A*(3, 2, 0) m. **[04]**

Solution

(i) Position vector

$\bar{r}_{AP} = \mathbf{i} + 3\,\mathbf{j} - 2\,\mathbf{k}$

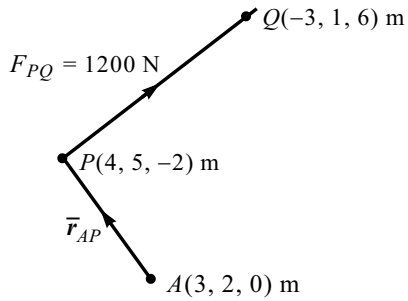

(ii) Force vector ($\bar{F}$)

$$\bar{F}_{PQ} = F_{PQ}(\bar{e}_{PQ})$$

$$= 1200 \times \left(\frac{-7\,\mathbf{i} - 4\,\mathbf{j} + 8\,\mathbf{k}}{\sqrt{7^2 + 4^2 + 8^2}}\right)$$

$$\bar{F}_{PQ} = 105.65(-7\,\mathbf{i} - 4\,\mathbf{j} + 8\,\mathbf{k})$$

$$\bar{F}_{PQ} = -739.55\,\mathbf{i} - 422.6\,\mathbf{j} + 845.2\,\mathbf{k}$$

(iii) $\bar{M}_A = \bar{r}_{AP} \times \bar{F}_{PQ}$ (cross product)

$$= \begin{vmatrix} \mathbf{i} & \mathbf{j} & \mathbf{k} \\ 1 & 3 & -2 \\ -739.55 & -422.6 & 845.2 \end{vmatrix}$$

$\bar{M}_A = 1690.4\,\mathbf{i} - 633.9\,\mathbf{j} + 1796.05\,\mathbf{k}$ ***Ans.***

6. (c) A point moves along the path $y = x^2/3$ with a constant speed of 8 m/s. What are the *x* and *y* components of the velocities when *x* = 3. What is the acceleration of the point when *x* = 3. **[04]**

Solution : Refer : *University Paper Solution - December 2012, 5.(b)*

6. (d) A two step pulley supports two weights *A* = 40 N and *B* = 60 N as shown in Fig. 6(d). Find the downward acceleration of *A* if radius of bigger pulley is double that of the smaller one. Neglect friction and inertia of pulley. **[04]**

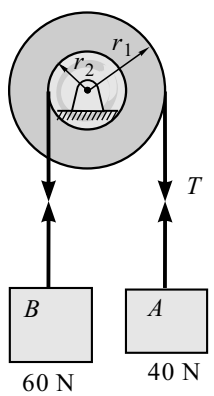

Fig. 6(d)

Solution

(i) Consider the F.B.D. of block *B*

By Newton's second law

$\Sigma F_y = m\,a_y$

$$2T - 60 = \frac{60}{9.81}(2a)$$

$$T = \frac{60a}{9.81} + 30$$

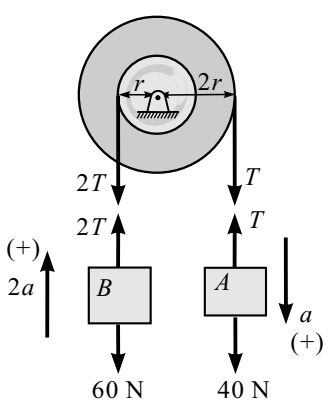

(ii) Consider the F.B.D. of block A

By Newton's second law

$$\Sigma F_y = m\, a_y$$

$$40 - T = \frac{40}{9.81}(a)$$

$$40 - \frac{60a}{9.81} - 30 = \frac{40}{9.81}(a)$$

$$10 = \frac{100}{9.81}(a)$$

$$a = \frac{10 \times 9.81}{100}$$

$$\therefore\ a = 0.981 \text{ m/s}^2 \quad \textbf{\textit{Ans.}}$$

●●●

DECEMBER - 2014

1. (a) Four concurrent forces act at a point as shown in Fig. 1(a). Find their resultant. **[04]**

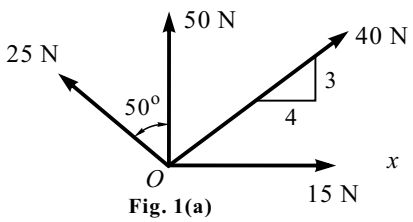

Fig. 1(a)

Solution

(i) $\Sigma F_x = 15 + 40 \cos 36.87^o - 25 \sin 50^o$

$\therefore \Sigma F_x = 27.84 \text{ N } (\rightarrow)$ ***Ans.***

(ii) $\Sigma F_y = 50 + 40 \sin 36.87^o + 25 \cos 50^o$

$\therefore \Sigma F_y = 90.06 \text{ N } (\uparrow)$ ***Ans.***

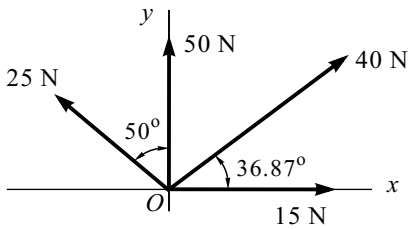

(iii) Magnitude of resultant R

$$R = \sqrt{(27.84)^2 + (90.06)^2}$$

$R = 94.26$ N ***Ans.***

(vi) Inclination of resultant θ

$$\theta = \tan^{-1}\left(\frac{27.84}{90.06}\right)$$

$\therefore \theta = 72.82^o$ ***Ans.***

(v) Position of R

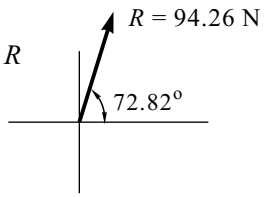

1.(b) Define Angle of friction and Angle of Repose. Show that Angle of friction is equal to Angle of Repose. **[04]**

Solution : Refer : *Text Book Chp. 7*

1.(c) A cylinder of weight 500 N is kept on two inclined planes as shown in Fig. 1(c). Determine the reactions at the contact points *A* and *B*. **[04]**

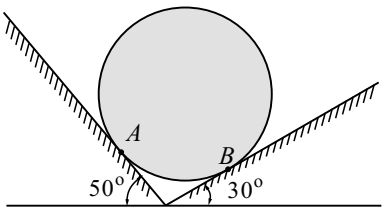

Fig. 1(c)

Solution

(i) Consider the F.B.D. of the cylinder.

(ii) By Lami's theorem, we have

$$\frac{500}{\sin 80^o} = \frac{R_A}{\sin 150^o} = \frac{R_B}{\sin 130^o}$$

$R_A = 253.85$ N $(\angle 40°)$ ***Ans.***

$R_B = 388.93$ N $(60° \angle)$ ***Ans.***

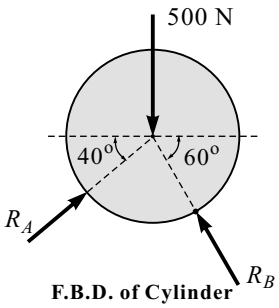

F.B.D. of Cylinder

1.(d) Acceleration of a particle moving along a straight line is represented by the relation $a = 30 - 4.5\,x^2$ m/s^2. The starts with zero initial velocity at $x = 0$. Determine (a) the velocity when $x = 3$ m (b) the position when the velocity is again zero (c) the position when the velocity is maximum. **[04]**

Solution

$a = 30 - 4.5x^2$ .....(I)

$v\dfrac{dv}{dx} = 30 - 4.5x^2$

$v\,dv = (30 - 4.5x^2)\,dx$

Integrating both sides, we get

$\dfrac{v^2}{2} = 30x - \dfrac{4.5x^3}{3} + c$

At $x = 0$, $v = 0$ $\therefore$ $c = 0$

$v^2 = 60x - 3x^3$ .....(II)

(i) $v = ?$ when $x = 3$ m

From Eq. (II)

$v^2 = 60 \times 3 - 3 \times 3^3$

$v = 9.949$ m/s ***Ans.***

(ii) $x = ?$ when $v = 0$ (again)

From Eq. (II)

$0 = 60x - 3x^3$

$x = \pm 4.47$ m ***Ans.***

(iii) $x = ?$ when v_{max} and $v_{max} = ?$

For velocity to be maximum, $\dfrac{dv}{dt} = 0 = a$

From Eq. (I)

$0 = 30 - 4.5x^2$

$x = 2.581$ m

From Eq. (II)

$v_{max}^2 = 60 \times 2.581 - 3 \times 2.581^3$

$v_{max} = 10.16$ m/s ***Ans.***

1.(e) A block of mass 5 kg is released from rest along a 40 degree inclined plane. Determine the acceleration of the block when it travels a distance of 3 m using D'Alemberts principle. Take coefficient of friction as 0.2. **[04]**

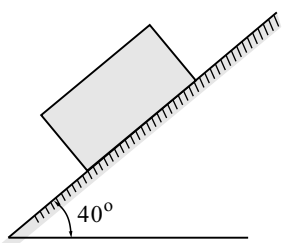

Fig. 1(e)

Solution

(i) Consider the F.B.D. of the 5 kg block

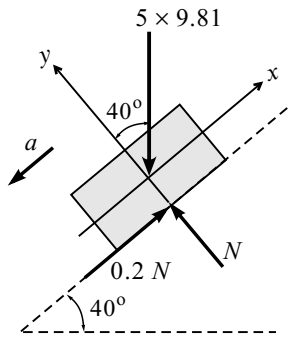

F.B.D. of Block

(ii) By D'Alemberts principle, we have

By Newton's second law, we have

$\Sigma F_y - ma_y = 0 \quad (\because a_y = 0)$

$N - 5 \times 9.81 \cos 40^o = 0$

$N = 5 \times 9.81 \cos 40^o$

$\Sigma F_x - ma_x = 0$

$5 \times 9.81 \sin 40^o - 0.2 \times 5 \times 9.81 \cos 40^o - 5a = 0$

$5 \times 9.81 \sin 40^o - 7.514 - 5a = 0$

$24.01 = 5a$

$\therefore a = 4.8 \text{ m/s}^2 \left(\overline{40^o}\right)$

2.(a) For given system find resultant and its point of application with respect to point *O* on the *x*-axis (*x* intercept). Force, along *CA* = 100 N, along *OD* = 250 N, along *ED* = 150 N, along *OE* = 100 N. A clockwise moment of 5000 N.cm is also acting at the point *O*. **[06]**

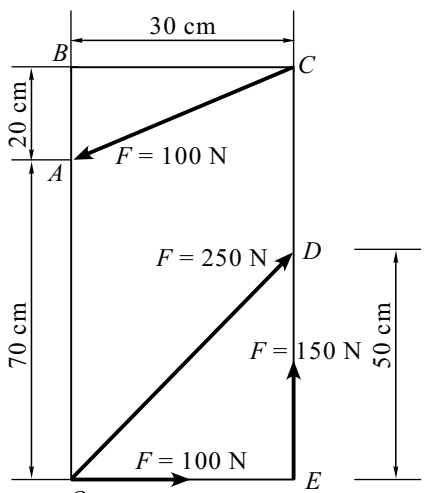

Fig. 2(a)

Solution

(i) $\tan \theta_1 = \dfrac{20}{30} \qquad \therefore \theta_1 = 33.69^o$

$\tan \theta_2 = \dfrac{50}{30} \qquad \therefore \theta_2 = 59.03^o$

(ii) $\Sigma F_x = 100 + 250 \cos 59.03^o - 100 \cos 33.69^o$

$\Sigma F_x = 145.44 \text{ N } (\rightarrow)$

(iii) $\Sigma F_y = 150 + 250 \sin 59.03^o - 100 \sin 33.69^o$

$\therefore \Sigma F_y = 308.88 \text{ N } (\uparrow)$

(iv) $R = \sqrt{(145.44)^2 + (308.88)^2}$

$\therefore R = 341.40 \text{ N}$ ***Ans.***

(v) $\theta = \tan^{-1}\left(\dfrac{308.88}{145.44}\right)$

$\therefore \theta = 64.78^o$ ***Ans.***

(vi) $\Sigma M_O = -5000 + 150 \times 30 + 100 \cos 33.69^o \times 90 - 100 \sin 33.69^o \times 30$

$\Sigma M_O = 5324.36 \text{ N-cm } (\circlearrowleft)$ ***Ans.***

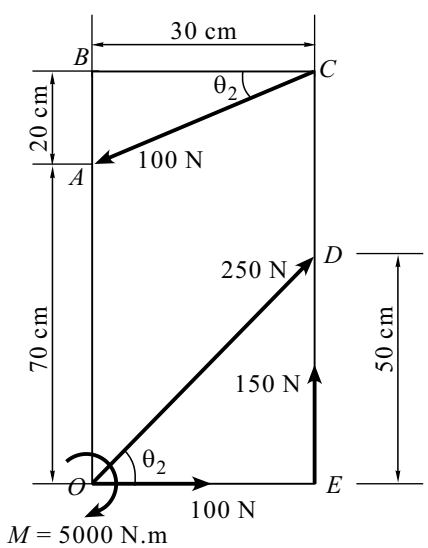

(vii) By Varignon's theorem

$$x = \frac{\Sigma M_O}{\Sigma F_y} = 17.23 \text{ cm} \quad \textbf{\textit{Ans.}}$$

(viii) Position of resultant R

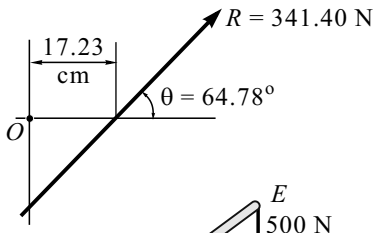

2.(b) **A cylinder of weight 300 N is held in equilibrium as shown in Fig. 2(b). Determine the tension in the string *AD* and reaction at *C* and *B*. The length of *AE* = 750 mm.** **[08]**

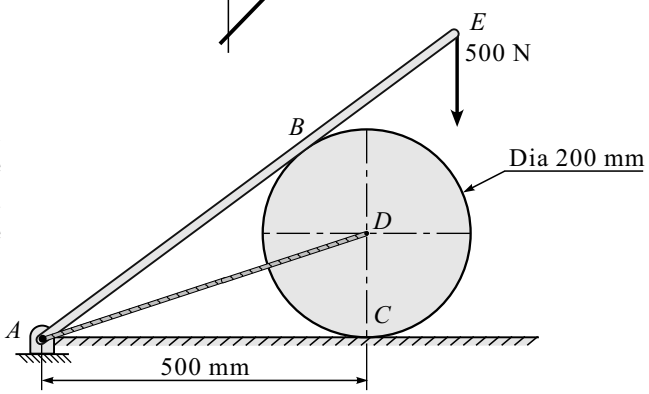

Fig. 2(b)

Solution

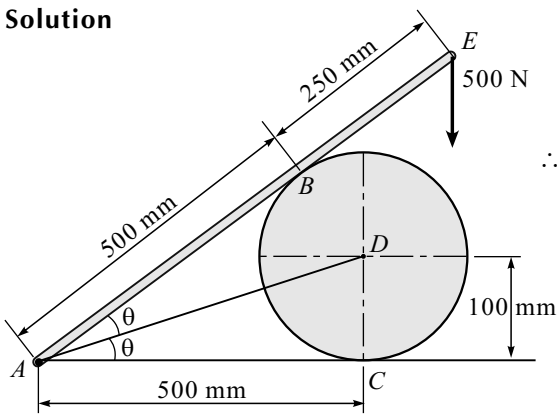

$$\theta = \tan^{-1}\left(\frac{100}{500}\right)$$

$$\therefore \theta = 11.31°$$

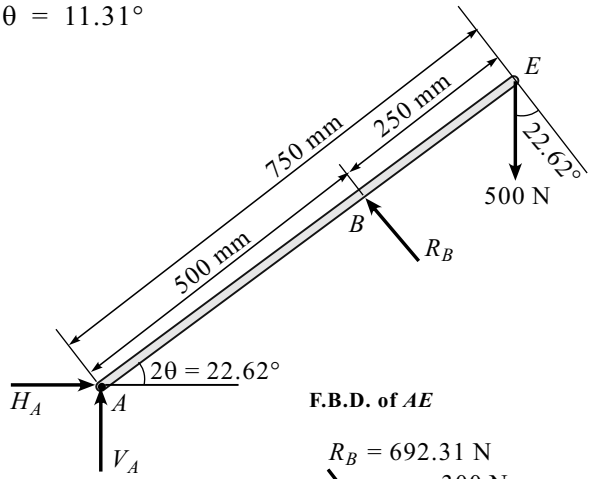

F.B.D. of *AE*

(i) Consider F.B.D. of AE

$\Sigma M_A = 0$

$R_B \times 500 - 500 \cos 22.62° \times 750 = 0$

$\therefore R_B = 692.31 \text{ N} \left(67.38°\right)$ ***Ans.***

(ii) Consider F.B.D. of ccylinder

$\Sigma F_x = 0$

$692.31 \cos 67.38° - T_{AD} \cos 11.31°$

$\therefore T_{AD} = 271.55 \text{ N} \left(11.31°\right)$ ***Ans.***

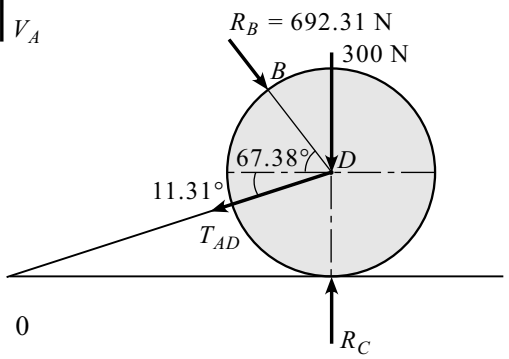

F.B.D. of Cylinder

(iii) $\Sigma F_y = 0$

$R_C - 300 - 692.31 \sin 67.38° - T_{AD} \sin 11.31° = 0$

$\therefore R_C = 992.31 \text{ N } (\uparrow)$ ***Ans.***

2.(c) If a ball is thrown vertically down with a velocity of 10 m/s from a height of 3 m. Find the maximum height it can reach after hitting the floor, if the coefficient of restitution is 0.7. **[06]**

Solution

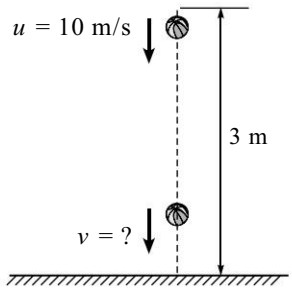

(i)

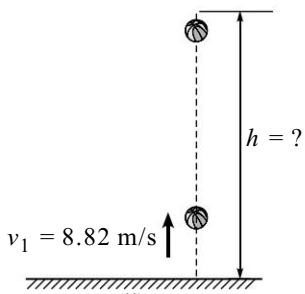

(ii)

(i) $v^2 = u^2 + 2gh \quad (\downarrow)$

$= 10^2 + 2 \times 9.81 \times 3$

$v = 12.6 \text{ m/s} \quad (\downarrow)$

(ii) Coefficient of restitution

$$e = -\left[\frac{v_2 - v_1}{u_2 - u_1}\right]$$

$$0.7 = -\left[\frac{0 - v_1}{0 - (-12.6)}\right]$$

$v_1 = 8.82 \text{ m/s} \quad (\uparrow)$

(iii) $v^2 = u^2 + 2gh$

$0 = v_1^2 + 2 \times (-9.81)\, h$

$h = 3.96 \text{ m}$

3.(a) Find centroid of shaded area. **[08]**

Solution

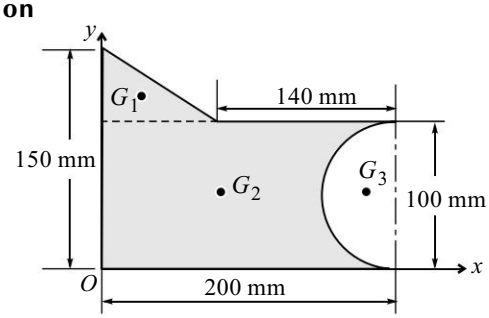

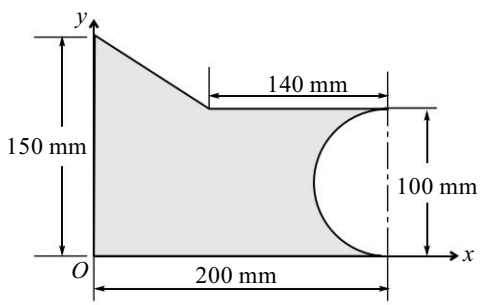

Fig. 3(a)

Coordinates of the centroid of shaded area

$$\bar{x} = \frac{\frac{1}{2} \times 60 \times 50 \times 20 + 200 \times 100 \times 100 - \frac{\pi \times 50^2}{4}\left(200 - \frac{4 \times 50}{3\pi}\right)}{\frac{1}{2} \times 60 \times 50 + 200 \times 100 \times 100 - \frac{\pi \times 50^2}{4}} = 75.56 \text{ mm}$$

$$\bar{y} = \frac{\frac{1}{2} \times 60 \times 50 \times \frac{50}{3} + 200 \times 100 \times 50 - \frac{\pi \times 50^2}{4} \times 50}{\frac{1}{2} \times 60 \times 50 + 200 \times 100 \times 100 - \frac{\pi \times 50^2}{4}} = 55.69 \text{ mm}$$

Centroid $G(\bar{x}, \bar{y}) = (75.56, 55.69)$ mm ***Ans.***

3.(b) A rectangular parallelepiped carries three forces shown in Fig. 3(b). Reduce the force system to a resultant force applied at the origin and a moment around origin. **[06]**

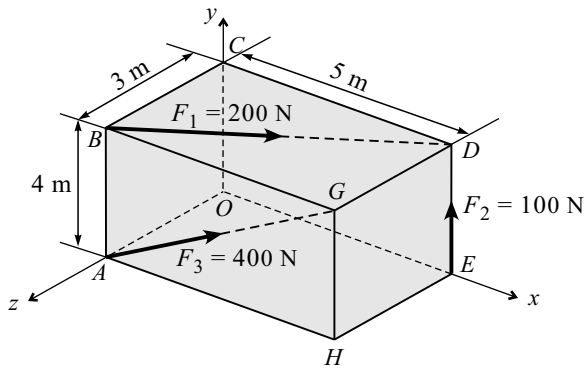

Fig. 3(b)

Solution

(i) Coordinates: $O(0, 0, 0)$; $A(0, 0, 3)$; $B(0, 4, 3)$; $C(0, 4, 0)$; $D(5, 4, 0)$; $E(5, 0, 0)$; $G(5, 4, 3)$; $H(5, 0, 3)$.

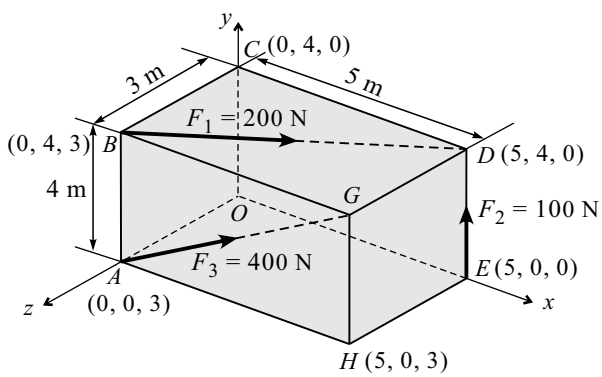

[I] Force vector

(i) $\overline{F}_1 = F_1\,(\overline{e}_{BD}) = \dfrac{200(5\,\boldsymbol{i} - 3\,\boldsymbol{k})}{\sqrt{5^2 + 3^2}}$

$\overline{F}_1 = 171.45\,\boldsymbol{i} - 102.87\,\boldsymbol{k}$

(ii) $\overline{F}_2 = F_2\,(\overline{e}_{ED}) = \dfrac{100(4\,\boldsymbol{j})}{\sqrt{4^2}}$

$\overline{F}_2 = 100\,\boldsymbol{j}$

(iii) $\overline{F}_3 = F_3\,(\overline{e}_{AG}) = \dfrac{400(5\,\boldsymbol{i} + 4\,\boldsymbol{j})}{\sqrt{5^2 + 4^2}}$

$\overline{F}_3 = 312.3\,\boldsymbol{i} + 249.84\,\boldsymbol{j}$

(iv) Resultant force

$\overline{R} = \overline{F}_1 + \overline{F}_2 + \overline{F}_3$

$\overline{R} = (483.75\,\boldsymbol{i} + 349.84\,\boldsymbol{j} - 102.87\,\boldsymbol{k})$ N ***Ans.***

[II] Position vector

$\overline{r}_{OB} = 4\,\boldsymbol{j} + 3\,\boldsymbol{k}$

$\overline{r}_{OE} = 5\,\boldsymbol{i}$

$\overline{r}_{OA} = 3\,\boldsymbol{k}$

[III] Moment vector

(i) $\overline{M}_1 = \overline{r}_{OB} \times \overline{F}_1 = \begin{vmatrix} \boldsymbol{i} & \boldsymbol{j} & \boldsymbol{k} \\ 0 & 4 & 3 \\ 171.45 & 0 & -102.87 \end{vmatrix}$

$\overline{M}_1 = -411.48\,\boldsymbol{i} + 514.35\,\boldsymbol{j} - 685.8\,\boldsymbol{k}$

(ii) $\overline{M}_2 = \overline{r}_{OB} \times \overline{F}_2 = \begin{vmatrix} \boldsymbol{i} & \boldsymbol{j} & \boldsymbol{k} \\ 5 & 0 & 0 \\ 0 & 100 & 0 \end{vmatrix}$

$\overline{M}_2 = 500\,\boldsymbol{k}$

(iii) $\overline{M_3} = \overline{r_{OA}} \times \overline{F_3} = \begin{vmatrix} \boldsymbol{i} & \boldsymbol{j} & \boldsymbol{k} \\ 0 & 0 & 3 \\ 312.3 & 249.84 & 0 \end{vmatrix}$

$\overline{M_3} = -749.52\,\boldsymbol{i} + 936.9\,\boldsymbol{j}$

(iv) Resultant moment

$\overline{M_R} = \overline{M_1} + \overline{M_2} + \overline{M_3} = (-1161\,\boldsymbol{i} + 1451.25\,\boldsymbol{j} - 185.8\,\boldsymbol{k})$ kN.m ***Ans.***

3.(c) A collar of mass 1 kg is attached to a spring and slides without friction along a circular rod which lies in a horizontal plane. The spring is undeformed when the collar is at *B* knowing that the collar is passing through the point *D* with a speed of 1.8 m/s, determine the speed of the collar when it passes through point *C* and *B*. Take stiffness of the spring, *k* = 250 N/m, radius of the circular path = 300 mm and distance *OA* = 125 mm. **[06]**

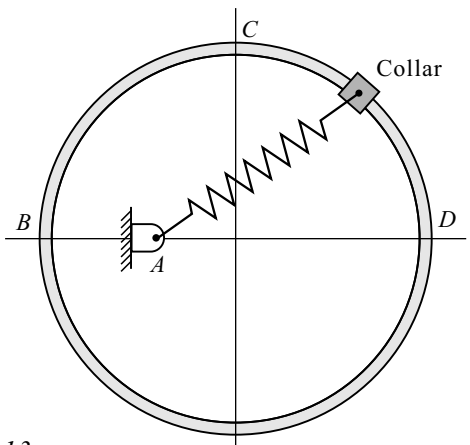

Fig. 3(c)

Solution : Refer : *Text Book - Pg. 14.16, Problem 13*

4.(a) Find the reactions at supports *B* and *F* for the beam loaded as shown in Fig. 4(a). **[08]**

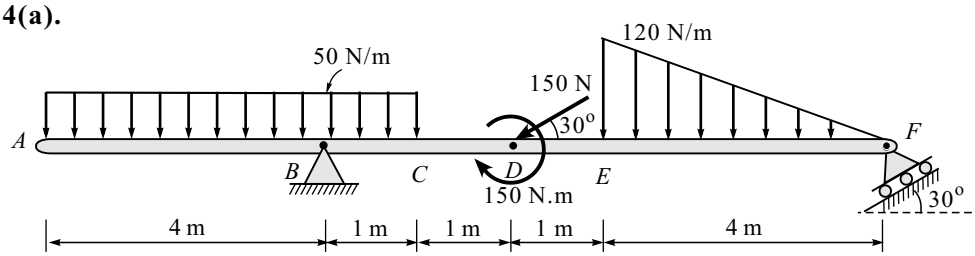

Fig. 4(a)

Solution

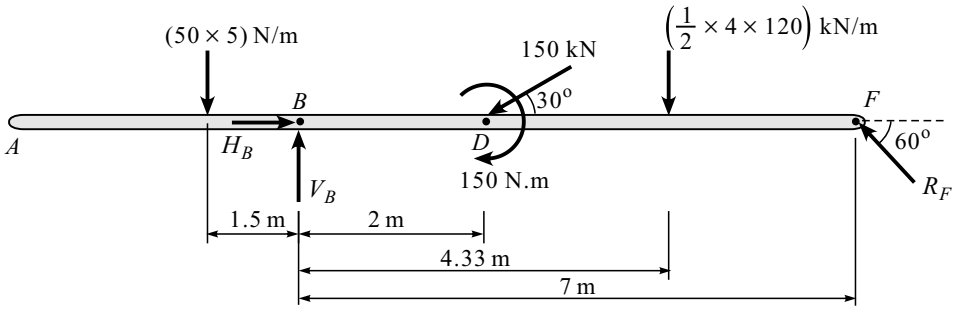

F.B.D. of beam *ADF*

(i) Consider the F.B.D. of the beam *ADF* with equivalent point load is shown in above figure.

(ii) $\Sigma M_B = 0$

$$50 \times 5 \times 1.5 - 150 - 150 \sin 30° \times 2 - \frac{1}{2} \times 4 \times 120 \times 4.33 + R_F \sin 60° \times 7 = 0$$

$R_F = 159.05$ kN $\left(60°\right)$ ***Ans.***

(iii) $\Sigma F_x = 0$

$$H_B - 150 \cos 30° - R_F \cos 60° = 0$$

$H_B = 209.42$ N $(\rightarrow)$ ***Ans.***

(iv) $\Sigma F_y = 0$

$$V_B - 50 \times 5 - 150 \sin 30° - \frac{1}{2} \times 4 \times 120 + R_F \sin 60° = 0$$

$V_B = 427.25$ N $(\uparrow)$ ***Ans.***

(v) $\theta = \tan^{-1}\left(\frac{427.25}{209.42}\right)$

$\theta = 63.88°$ ***Ans.***

(vi) $R_B = \sqrt{(209.42)^2 + (427.25)^2}$

$R_B = 475.81$ N $\left(63.88°\right)$ ***Ans.***

4.(b) A particle is projected from the top of a tower of height 50 m with a velocity of 20 m/sec at an angle 30 degrees to the horizontal. Determine : [06]

(1) Horizontal distance *AB* it travel from the foot of the tower.

(2) The velocity with which it strikes the ground at *B*.

(3) Total time taken to reach point *B*.

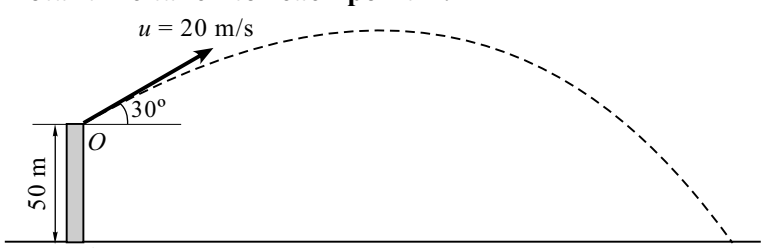

Fig. 4(b)

Solution

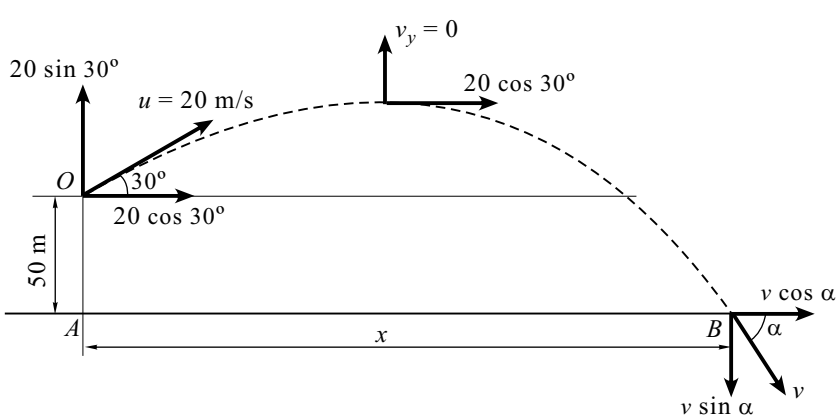

(i) Consider vertical motion under gravity from O to B

$$h = ut + \frac{1}{2}gt^2$$

$$-50 = 20 \sin 30^\circ \times t + \frac{1}{2} \times (-9.81) \times t^2$$

$$t = 4.37 \text{ sec}$$

(ii) Consider vertical motion

$$v = u + gt$$

$$-v \sin \alpha = 20 \sin 30^\circ + (-9.81) \times t$$

$$-v \sin \alpha = -32.86 \quad \text{... (I)}$$

(iii) Consider horizontal motion

$$v \cos \alpha = 20 \cos 30^\circ \quad \text{... (II)}$$

Dividing (I) by (II), we get

$$\alpha = 62.20^\circ$$

$$v = 37.13 \text{ m/s} \left(\searrow \alpha \right) \quad \textbf{\textit{Ans.}}$$

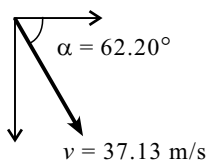

(iv) Consider horizontal motion with constant velocity

Displacement = Velocity × Time

$$x = 37.13 \times 4.37 = 162.25 \text{ m} \quad \textbf{\textit{Ans.}}$$

4.(c) **Fig. 4(c) shows the crank and connecting rod mechanism. The crank *AB* rotates with an angular velocity of 2 rad/sec in clockwise direction. Determine the angular velocity of connecting rod *BC* and the velocity of piston *C* using ICR method. *AB* = 0.3 m and *BC* = 0.8 m.** **[06]**

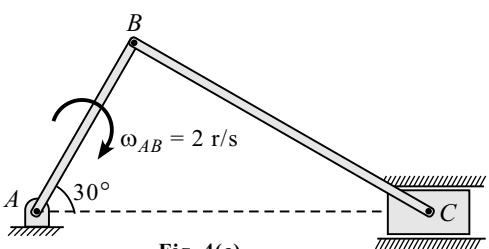

Fig. 4(c)

Solution

(i) Crank AB

$$v_B = AB \times \omega_{AB}$$

$$\therefore \; v_B = 0.6 \text{ m/sec} \quad \textbf{\textit{Ans.}}$$

(ii) In ΔIBC, by sine rule, we have

$$\frac{BC}{\sin 60^\circ} = \frac{IB}{\sin 30^\circ} = \frac{IC}{\sin 90^\circ}$$

$$\therefore \; IB = 0.461 \text{ m and } IC = 0.923 \text{ m}$$

For rod BC

$$v_B = IB \times \omega_{BC}$$

$$\omega_{BC} = \frac{0.6}{0.461} = 1.30 \text{ rad/s} (\circlearrowleft) \quad \textbf{\textit{Ans.}}$$

(iv) $v_C = IC \times \omega_{BC}$

$$v_C = 0.923 \times 1.30 = 1.2 \text{ m/sec} (\rightarrow) \quad \textbf{\textit{Ans.}}$$

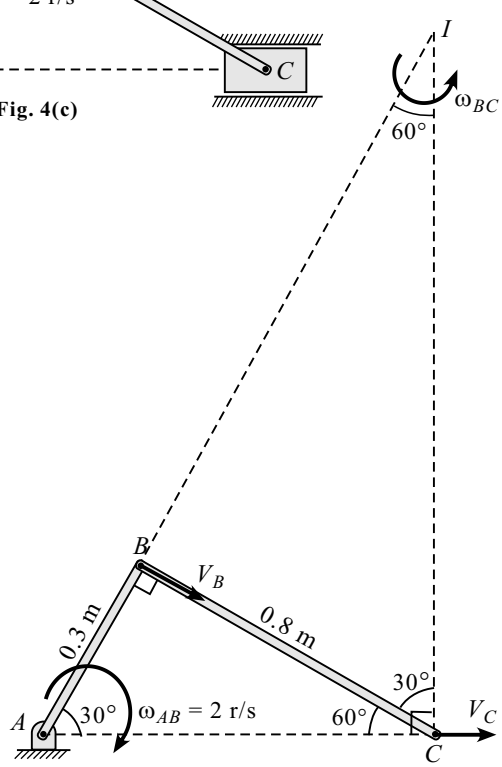

5. (a) A truss is loaded as shown in the diagram given below. Determine : **[08]**

(1) Support reactions

(2) Forces on *BC*, *BD* by method of section.

(3) Forces on *AB*, *AE* and *BE* by method of joints.

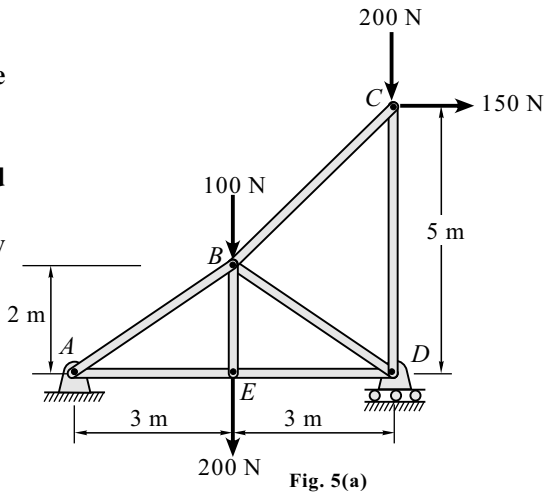

Fig. 5(a)

Solution

(i) To find support reactions at A and D

$\Sigma M_A = 0$

$-200 \times 3 - 100 \times 3 - 200 \times 6 - 150 \times 5 + R_D \times 6 = 0$

$\therefore R_D = 475$ kN (↑) ***Ans.***

(ii) $\Sigma F_x = 0$

$H_A - 150 = 0$

$\therefore H_A = 150$ kN (→) ***Ans.***

(iii) $\Sigma F_y = 0$

$V_A - 200 - 100 - 200 + 475 = 0$

$\therefore V_A = 25$ kN (↑) ***Ans.***

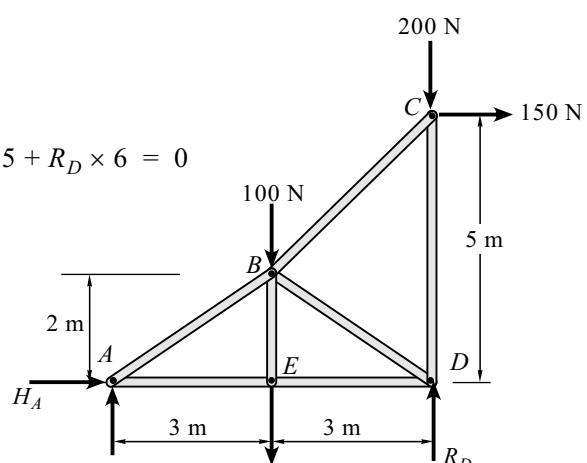

[I] Method of Section

Consider section (s) - (s)

(i) $\Sigma M_B = 0$

$-F_{DE} \times 2 + 475 \times 3 - 150 \times 3 - 200 \times 3 = 0$

$F_{DE} = 187.5$ N (T) ***Ans.***

(ii) $\Sigma M_C = 0$

$-F_{DE} \times 5 - F_{DB} \cos 33.7° \times 5 = 0$

$F_{DB} = -225.3$ N $= 225.3$ N (C) ***Ans.***

(iii) $\Sigma M_D = 0$

$-150 \times 5 + F_{CB} \cos 45° \times 5 = 0$

$F_{CB} = 212.1$ N (T) ***Ans.***

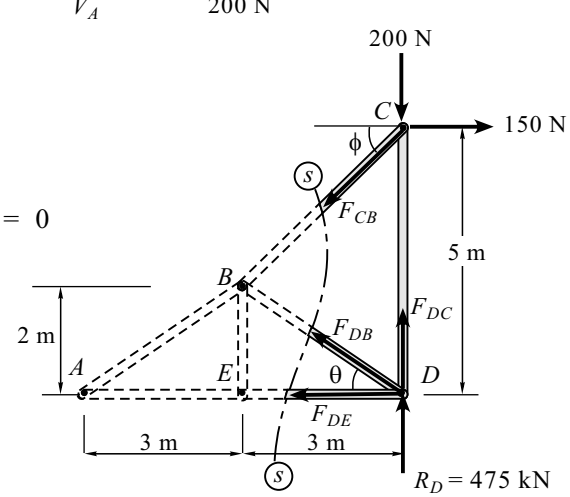

$\left[\theta = \tan^{-1}\left(\frac{2}{3}\right) = 33.7° \text{ and } \phi = \tan^{-1}\left(\frac{3}{3}\right) = 45°\right]$

[II] Method of Joints

Joint *A*

$\Sigma F_y = 0$

$2 + F_{AB} \sin 33.7° = 0$

$F_{AB} = -45.05$ N

$F_{AB} = 45.05$ N (C) ***Ans.***

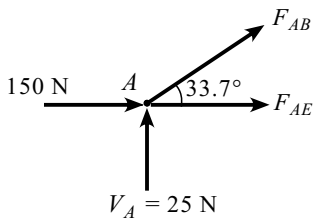

$\Sigma F_x = 0$

$F_{AE} + F_{AB} \cos 33.7° + 150 = 0$

$F_{AE} = -112.52$ N

$F_{AE} = 112.52$ N (C) ***Ans.***

Joint *B*

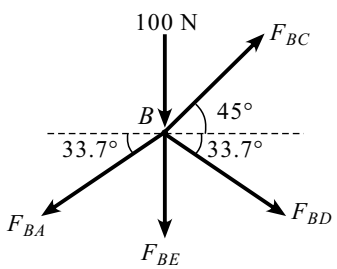

$\Sigma F_x = 0$

$F_{BC} \cos 45° + F_{BD} \cos 33.7° = -37.47$ ... (I)

$\Sigma F_y = 0$

$F_{BC} \sin 45° - F_{BD} \sin 33.7° - 100$

$- F_{BF} - F_{BA} \sin 33.7° = 0$

$F_{BC} \sin 45° - F_{BD} \sin 33.7° = 275$ ... (II)

Solving (I) and (II) we get

$F_{BC} = 212.1$ N (T) ***Ans.*** and $F_{BD} = -225.3$ N $= 225.3$ N (C) ***Ans.***

Joint *E*

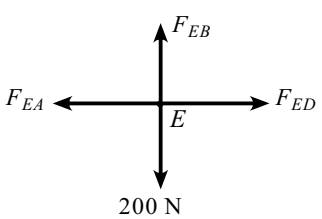

$\Sigma F_y = 0$

$F_{ED} + 112.52 = 0$

$F_{ED} = -112.52$ N $= 112.52$ N (C) ***Ans.***

$\Sigma F_x = 0$

$F_{EB} - 200 = 0$

$F_{EB} = 200$ N (T) ***Ans.***

Joint *D*

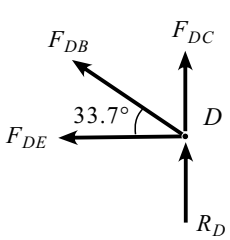

$\Sigma F_y = 0$

$F_{DC} - 475 + F_{DB} \sin 33.7° = 0$

$F_{DC} = 700$ N (T) ***Ans.***

5. (b) A particle is projected with an initial velocity of 2 m/s long a straight line. The relation between acceleration and time is given in Fig. 5(b). Draw *v-t* and *s-t* diagram. **[06]**

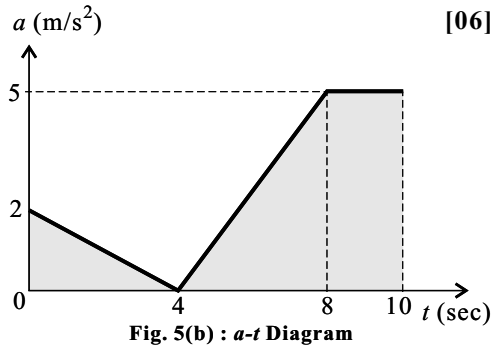

Fig. 5(b) : *a-t* Diagram

Solution

(i) Velocity-Time diagram

Change in velocity = Area under *a-t* diagram

(a) At $t = 4$ sec

$v_4 - v_0 = \frac{1}{2} \times 4 \times 2 \qquad (\because v_0 = 2 \text{ m/s})$

$v_4 = 6$ m/s

(b) At $t = 8$ sec

$v_8 - v_4 = \frac{1}{2} \times 4 \times 5$

$v_8 = 10 + 6 = 16$ m/s

(c) At $t = 10$ sec

$v_{10} - v_8 = 2 \times 5$

$v_{10} = 10 + 16 = 26$ m/s

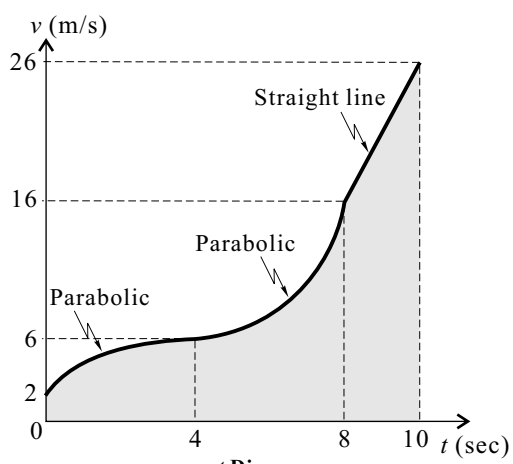

***v-t* Diagram**

(ii) Displacement-Time diagram

Change in displacement = Area under *v-t* diagram

(a) At $t = 4$ sec

$s_4 - s_0 = 4 \times 2 + \frac{2}{3} \times 4 \times 4$

$s_4 = 8 + 10.67 = 18.67$ m

(b) At $t = 8$ sec

$s_8 - s_4 = 4 \times 3 + \frac{1}{3} \times 4 \times 10$

$s_8 = 10 + 13.3 + 18.67 = 42$ m

(c) At $t = 10$ sec

$s_{10} - s_8 = 2 \times 16 + \frac{1}{3} \times 2 \times 10$

$s_{10} = 32 + 10 + 42 = 84$ m

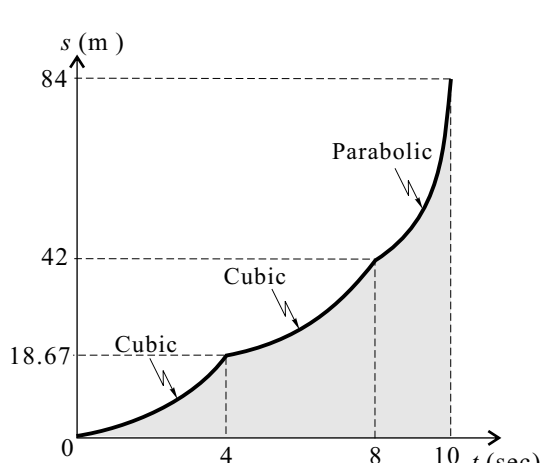

***s-t* Diagram**

5. (c) A wheel of 2 m diameter rolls without slipping on a flat surface. The center of the wheel is moving with a velocity 4 m/s towards the right. Determine the angular velocity of the wheel and velocity of points *P*, *Q* and *R* on the wheel. **[06]**

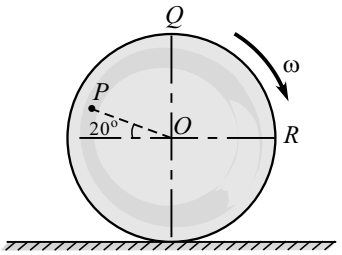

Fig. 5(c)

Solution

(i) Point of contact with stationary surface is ICR.

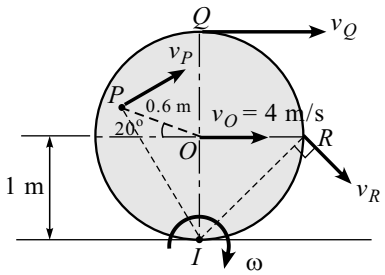

(ii) $v_O = (IO)\,\omega$

$\omega = \dfrac{v_O}{IO} = \dfrac{4}{1}$

$\omega_{\text{wheel}} = 4$ rad/sec (↺) ***Ans.***

(iii) $v_Q = (IQ)\,\omega = (2)(4)$

$v_Q = 8$ m/s (→) ***Ans.***

(iv) $IR = \sqrt{1^2 + 1^2} = \sqrt{2}$

$v_R = (IR)\,\omega = \sqrt{2} \times 4 = 5.657$ m/s

$v_R = 5.657$ m/s (↘ 45°) ***Ans.***

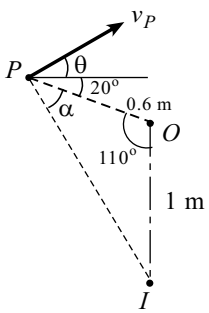

(v) By cosine rule

$IP = \sqrt{1^2 + (0.6)^2 - 2(1)(0.6)}$

$IP = 1.331$ m

By sine rule

$\dfrac{IO}{\sin\alpha} = \dfrac{IP}{\sin 110°}$

$\therefore\ \alpha = 44.91°$

$\theta + 20 + \alpha = 90°$

$\therefore\ \theta = 25.09°$

(vi) $v_P = (IP)\,\omega$

$v_P = 1.331 \times 4 = 5.324$ m/s (↗ 25.09°) ***Ans.***

6. (a) A force of 100 N acts at a point *P*(–2, 3, 5) m has its line of action passing through *Q*(10,3,4) m. Calculate moment of this force about origin (0, 0, 0). **[04]**

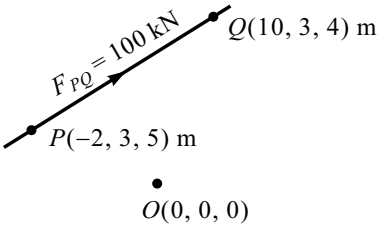

Solution

(i) Position vector ($\bar{r}_{OP}$)

$\bar{r}_{OP} = -2\,\mathbf{i} + 3\,\mathbf{j} + 5\,\mathbf{k}$

(ii) Force vector ($\overline{F}$)

$$\overline{F}_{PQ} = (F_{PQ})(\bar{e}_{PQ})$$

$$\overline{F}_{PQ} = (100)\left(\frac{12\,\mathbf{i} - \mathbf{k}}{\sqrt{12^2 + 1^2}}\right) = 8.3\,(12\,\mathbf{i} - \mathbf{k})$$

$$\overline{F}_{PQ} = 99.6\,\mathbf{i} - 8.3\,\mathbf{k}$$

(iii) $\overline{M}_O = \bar{r}_{OP} \times \overline{F}_{PQ}$

$$= \begin{vmatrix} \mathbf{i} & \mathbf{j} & \mathbf{k} \\ -2 & 3 & 5 \\ 99.6 & 0 & -8.3 \end{vmatrix}$$

$$\overline{M}_O = -24.9\,\mathbf{i} + 481.4\,\mathbf{j} - 298.8\,\mathbf{k} \quad \textit{Ans.}$$

6. (b) A ladder *AB* of length 3 m and weight 25 kg is resting against a vertical wall and a horizontal floor. The ladder makes ah angle 50 degrees with the floor. A man of weight 60 kg tries to climb the ladder. How much distance along the ladder he will be able to climb if the coefficient of friction between ladder and floor as 0.2 and that between ladder and wall as 0.3. Also find the angle the ladder should make with the horizontal such that the man can climb till the top of the ladder. [08]

Solution

Consider the F.B.D. of the ladder

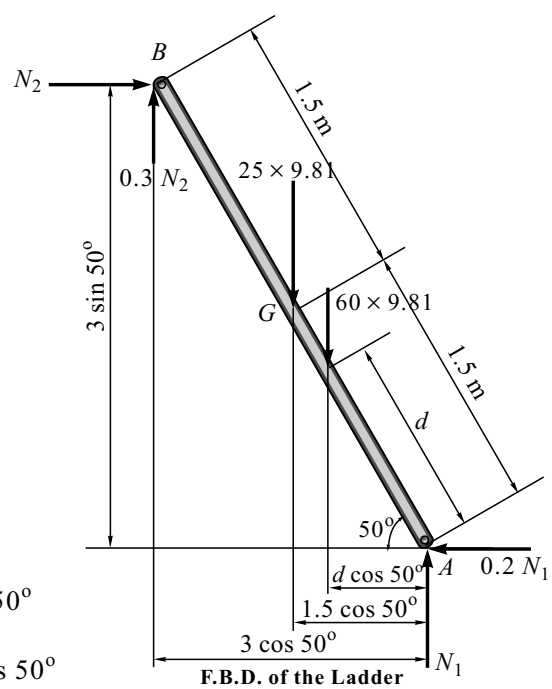

F.B.D. of the Ladder

(i) $\Sigma F_x = 0$

$N_2 = 0.2\,N_1 \qquad \ldots$ (I)

(ii) $\Sigma F_y = 0$

$N_1 + 0.3\,N_2 = (25 + 60) \times 9.81$

$N_1 + 0.3(0.2\,N_1) = (25 + 60) \times 9.81$

$N_1 = 786.65$ N

Substituting this value in (I) we get

$N_2 = 0.2\,(786.65)$

$N_2 = 157.33$ N

(iii) $\Sigma M_A = 0$

$$60 \times 9.81 \times d \cos 50^\circ = 0.3 \times 157.33 \times 3 \cos 50^\circ + 157.33 \times 3 \sin 50^\circ - 25 \times 9.81 \times 1.5 \cos 50^\circ$$

$$\therefore d = \frac{216.12}{60 \times 9.81 \cos 50^\circ} = 0.5712 \text{ m} \quad \textit{Ans.}$$

(iii) For angle with horizontal (θ), $d = 3$ m

$\Sigma M_A = 0$

$60 \times 9.81 \times 3 \cos\theta + 25 \times 9.81 \times 1.5 \cos\theta$
$= 0.3 \times 157.33 \times 3 \cos\theta + 157.33 \times 3 \sin\theta$

$\cos\theta\,(60 \times 9.81 \times 3 + 25 \times 9.81 \times 1.5 - 0.3 \times 157.33 \times 3) = \sin\theta\,(157.33 \times 3)$

$$\tan\theta = \frac{471.99}{1991.08} = 0.2369$$

$\therefore\ \theta = 13.32^\circ$ ***Ans.***

6. (c) A particle moves along a track which has a parabolic shape with a constant speed of 10 m/sec. The curve is given by $y = 5 + 0.3x^2$. Find the components of velocity and normal acceleration when $x = 2$ m. **[04]**

Solution

$y = 5 + 0.3x^2$

(i) $\dfrac{dy}{dx} = 0.6x \qquad \therefore \left(\dfrac{dy}{dx}\right)_{x=2} = 0.6 \times 2 = 1.2$

$\dfrac{d^2y}{dx^2} = 0.6 \qquad \therefore \left(\dfrac{d^2y}{dx^2}\right)_{x=2} = 0.6$

$\tan\theta = \dfrac{dy}{dx}$

$\therefore\ \theta = 50.19^\circ$

(ii) $v_x = v\cos\theta = 10\cos 50.19^\circ$

$v_x = 6.4$ m/sec ***Ans.***

$v_y = v\sin\theta = 10\sin 50.19^\circ$

$v_y = 7.68$ m/sec ***Ans.***

(iii) Radius of curvature

$$\rho = \left|\frac{\left[1 + \left(\dfrac{dy}{dx}\right)^2\right]^{3/2}}{\dfrac{d^2y}{dx^2}}\right|$$

$$= \left|\frac{\left[1 + (1.2)^2\right]^{3/2}}{0.6}\right| = 6.352 \text{ m}$$

Now, $a_n = \dfrac{v^2}{\rho} = 15.74$ m/s^2

Since speed is constant $\therefore\ a_t = 0$

$\therefore\ a_n = a = 15.74$ m/s^2 ***Ans.***

6. (d) Two blocks *A* and *B* connected as shown in Fig. 6(d). The string is inextensible. Mass of *A* and *B* are 3 kg and 5 kg respectively. If the coefficient of friction between *A* and inclined, plane is 0.25 determine the tension on the strings and accelerations of *A* and *B*. **[04]**

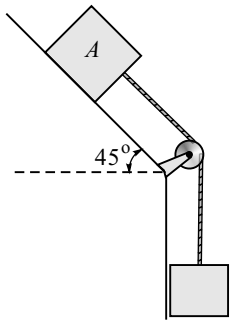

Fig. 6(d)

Solution

(i) Consider the F.B.D. of block *A*

By Newton's second law

$\Sigma F_y = ma_y = 0$

$N_A - (3 \times 9.81 \cos 45^o) = 0$

$N_A = (3 \times 9.81 \cos 45^o)$ N

By Newton's second law

$\Sigma F_x = ma_x$

$T + 3 \times 9.81 \sin 45^o - 0.2\, N_A = ma$

$T - 3a = -15.60$

$T = -15.60 + 3a$ ... (i)

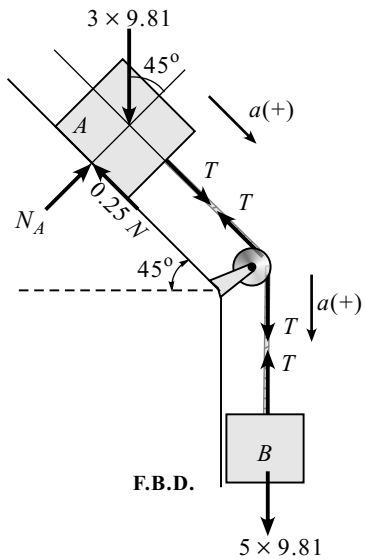

(ii) Consider the F.B.D. of block *B*

By Newton's second law

$\Sigma F_y = ma_y$

$5 \times 9.81 - T = 5a$

$-T - 5a = -49.05$

$T = 49.05 - 5a$ ... (ii)

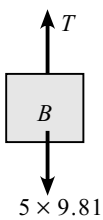

Equating equations (i) and (ii)

$-15.60 + 3a = 49.05 - 5a$

$a = 8.08$ m/s^2 $(a = a_A = a_B)$

$T = 8.64$ N ***Ans.***

●●●

MAY - 2015

1.(a) The guy cables *AB* and *AC* are attached in the top of the transmission tower as shown in Fig. 1(a). The tension in cable *AC* is 8 kN. Determine the required tension *T* in cable *AB* such that the net effect of the two cable tensions is a downward force at point *A*. Determine the magnitude *R* of this downward force. **[04]**

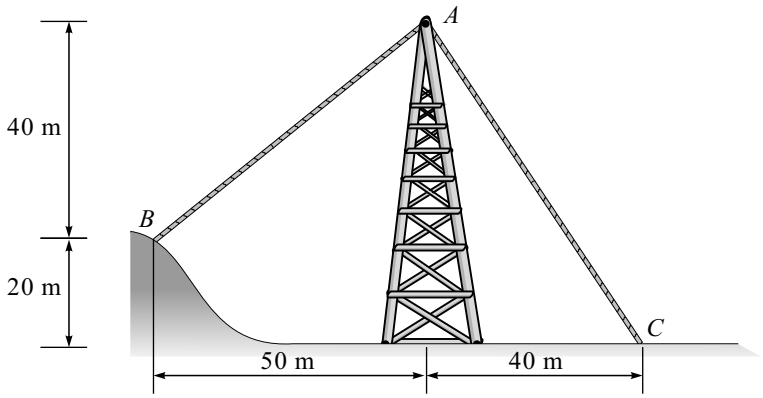

Solution

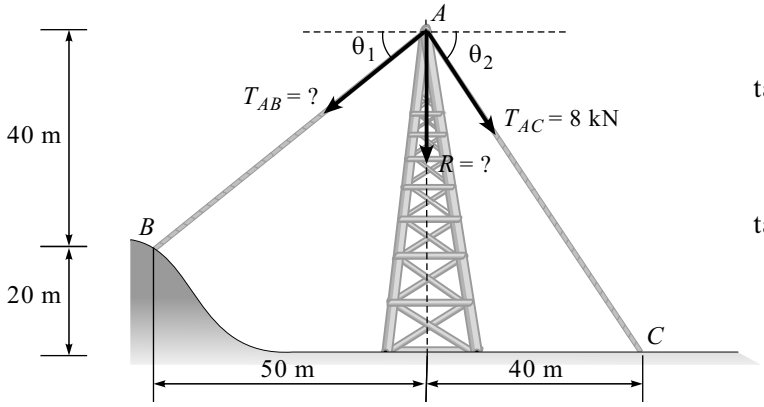

$$\tan\theta_1 = \frac{40}{50}$$

$$\therefore\ \theta_1 = 38.65°$$

$$\tan\theta_2 = \frac{60}{40}$$

$$\therefore\ \theta_2 = 56.31°$$

(i) Resultant is vertical

$\Sigma F_x = 0$

$8\cos 56.31° - T_{AB}\cos 38.65° = 0$

$T_{AB} = 5.68$ kN ***Ans.***

(ii) $R = \Sigma F_y$

$R = -8\sin 56.31° - T_{AB}\sin 38.65°$

$R = -10.20$ kN

$R = 10.20$ kN (↓) ***Ans.***

1.(b) Determine the tensions in cord *AB* and *BC* for equilibrium of 30 kg block shown in Fig. 1(b). **[04]**

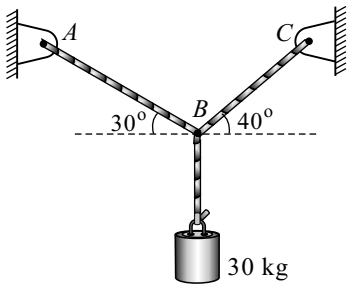

Fig. 1(b)

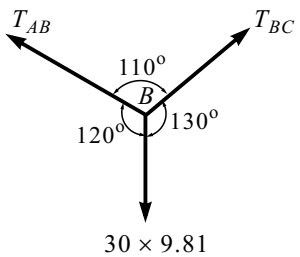

F.B.D. of point *B*

Solution

(i) Consider the F.B.D. of Point *B*.

(ii) By Lami's theorem, we have

$$\frac{30 \times 9.81}{\sin 110^\circ} = \frac{T_{AB}}{\sin 130^\circ} = \frac{T_{BC}}{\sin 120^\circ}$$

$\therefore T_{AB} = 239.91$ N (30°) ***Ans.***

$\therefore T_{BC} = 271.22$ N (40°) ***Ans.***

1.(c) A paint box weighing 9 kg is kept on a wooden block weighing 1.2 kg. Determine the magnitude and direction of the friction force exerted by the roof surface on wooden block and normal force exerted by the roof on the wooden block. **[04]**

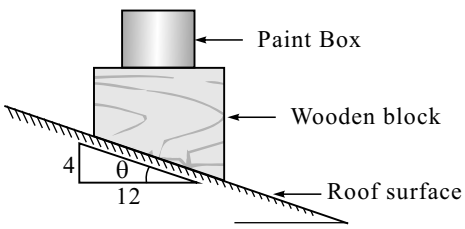

Fig. 1(c)

Solution

Consider the F.B.D. of the paint box and wooden block together

(i) $\Sigma F_x = 0$

$N \cos 71.56° - F \cos 18.44° = 0$

$N = 3F$

(ii) $\Sigma F_y = 0$

$N \sin 71.56° + F \sin 18.44° - 10.2 \times 9.81 = 0$

$3F \sin 71.56° + F \sin 18.44° = 10.2 \times 9.81$

$\therefore F = 31.64$ N (18.44°) ***Ans.***

Now, $N = 3F$

$\therefore N = 94.9$ N (71.56°) ***Ans.***

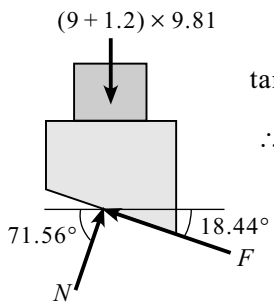

$\tan\theta = \frac{4}{12}$

$\therefore \theta = 18.44°$

F.B.D. of Paint Box and Wooden Block Both Together

1.(d) Two cars start towards each other from stop *X* and stop *Y* at 1.36 pm, the first reaches stop *Y*, travelling 8 km path at 1.44 pm. Second car reaches stop *X* at 1.46 pm. If they move at uniform velocity, determine their time of meeting and their distance from stop *X*. **[04]**

Solution

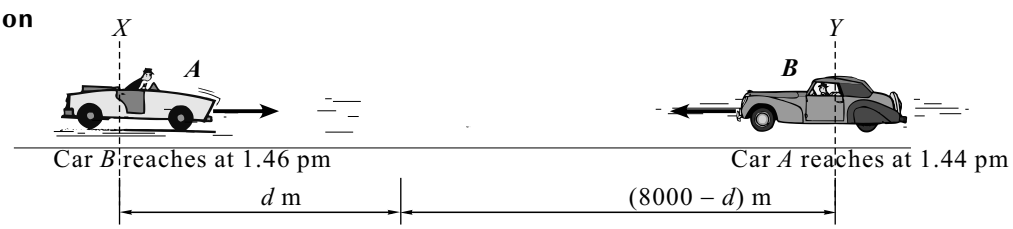

(i) Car A

Displacement = Velocity × Time

$8000 = v_A \times 8 \times 60$

$v_A = 16.67$ m/s

$\therefore\ d = 16.67 \times t$ ... (I)

(ii) Car B

Displacement = Velocity × Time

$8000 = v_B \times 10 \times 60$

$v_B = 13.33$ m/s

$\therefore\ 8000 - d = 13.33 \times t$ ... (II)

Solving (I) and (II), we get

$8000 - 16.67 \times t = 13.33 \times t$

$\therefore\ t = 266.67$ sec ***Ans.***

From (I), $d = 16.67 \times 266.67$

$\therefore\ d = 4445.38$ m ***Ans.***

1.(e) The 550 N block rests on horizontal lane for which the coefficient of kinetic friction $\mu_k = 0.32$. If the box is subjected to a 400 N towing force as shown in Fig. 1(e). Find the velocity of the box in 4 second starting from rest. **[04]**

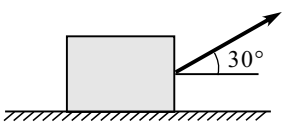

Fig. 1(e)

Solution

Consider the F.B.D. of block

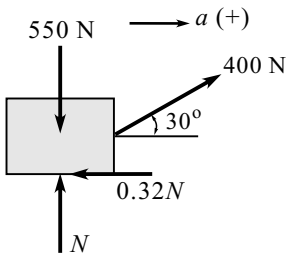

F.B.D. of block

(i) $\sum F_y = 0$

$N + 400 \sin 30^\circ - 550 = 0$

$N = 350$ N

(ii) By Newton's second law, we have

$\sum F_y = ma_y$

$400 \cos 30^\circ - 0.32\,N = \dfrac{550}{9.81}\,a$

$\therefore\ a = 4.18$ m/s^2 (→)

$v = u + at$

$v = 0 + 4.18 \times 4$

$\therefore\ v = 16.72$ m/s ***Ans.***

2. (a) Replace the force system [Fig. 2(a)] by a single force w. r. to point *C*. **[06]**

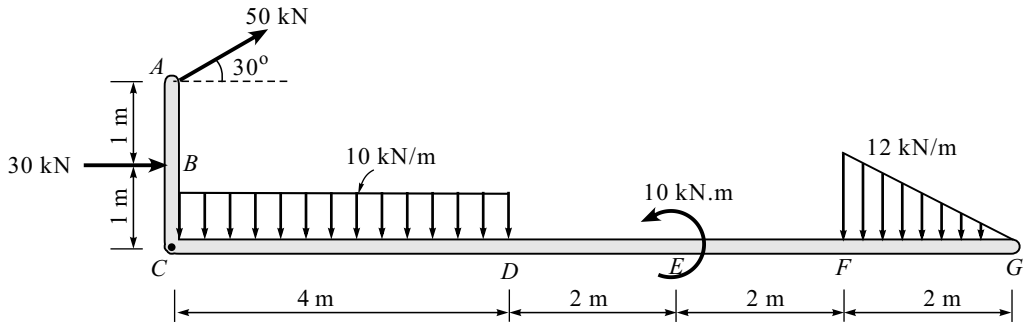

Fig. 2(a)

Solution

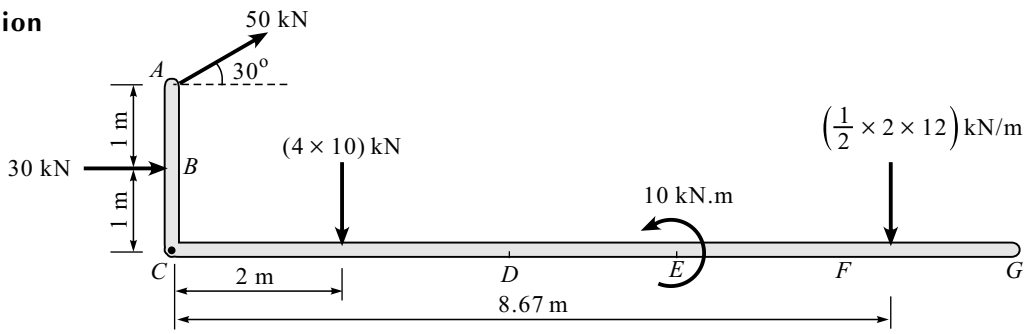

F.B.D. of beam *ACG*

(i) Consider the F.B.D. of the beam *ADF* with equivalent point load is shown in above figure.

(ii) $\Sigma F_x = 50 \cos 30° + 30$

$\Sigma F_x = 73.30 \text{ kN } (\rightarrow)$

(iii) $\Sigma F_y = -(4 \times 10) + 50 \sin 30° - \frac{1}{2} \times 2 \times 12$

$\Sigma F_y = -27 \text{ kN} = 27 \text{ kN } (\downarrow)$

(iv) $\theta = \tan^{-1}\left(\frac{27}{73.30}\right)$

$\theta = 20.22°$

(v) $R = \sqrt{(73.30)^2 + (27)^2}$

$R = 78.11 \text{ kN}$

(vi) $\Sigma M_C = -50 \cos 30° \times 2 - 30 \times 1 - 40 \times 2 - 12 \times 8.67 + 10$

$\Sigma M_C = -290.64 \text{ kN-m}$

$\Sigma M_C = 290.64 \text{ kN-m } (\circlearrowleft)$

(vii) By Varignon's theorem

$$d = \frac{\Sigma M_C}{R}$$

$$d = 3.72 \text{ m}$$

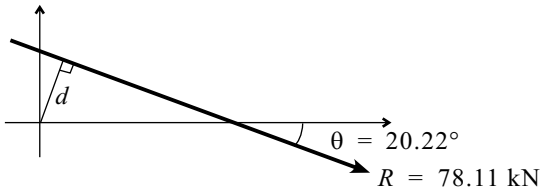

(viii) Position of R

2. (b) A bar of 3 m length and negligible weight rests in horizontal position on two smooth inclined planes [Fig. 2(b)]. Determine the distance x at which the load Q = 150 N should be placed from point B to keep the bar horizontal. **[08]**

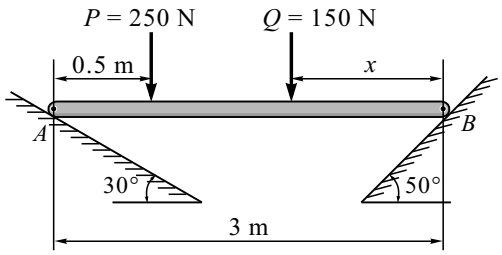

Fig. 2(b)

Solution

(i) Consider the F.B.D. of the bar AB.

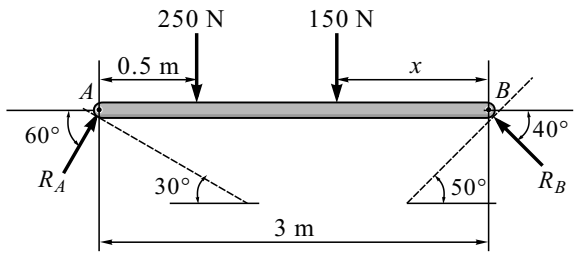

F.B.D. of Bar *AB*

(ii) $\Sigma F_x = 0$

$R_A \cos 60° - R_B \cos 40° = 0$ ... (i)

(iii) $\Sigma F_y = 0$

$R_A \sin 60° + R_B \sin 40° - 250 - 150 = 0$

$R_A \sin 60° + R_B \sin 40° = 400$ ... (ii)

Solving equations (i) and (ii), we get

$R_A = 311.14$ N $(60°)$

$R_B = 203$ N $(40°)$

(iv) $\Sigma M_B = 0$

$-R_A \sin 60° \times 3 + 250 \times 2.5 + 150\,x = 0$

$$x = \frac{311.14 \sin 60° - 625}{150}$$

$\therefore x = 1.22$ m ***Ans.***

2. (c) Define the terms with neat sketches : Direct impact, oblique impact and line of impact. **[08]**

Solution : Refer : *Text Book*

3. (a) Locate the centroid of the shaded portion w. r. to *OX* and *OY* axes [Fig. 3(a)]. **[08]**

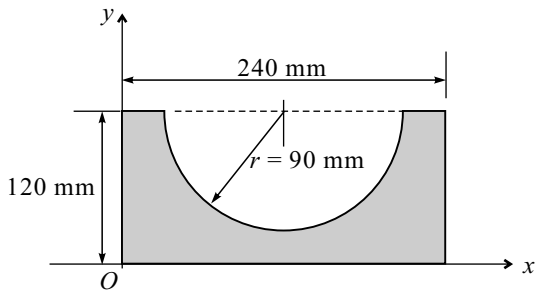

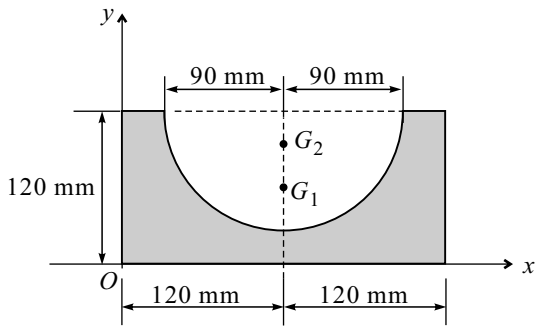

Solution

(i) Given shaded area is having y-axis of symmetry at vertical distance 120 mm from O.

$\therefore \quad \bar{x} = 120$ mm

(ii)
$$\bar{y} = \frac{240 \times 120 \times 60 - \dfrac{\pi \times 90^2}{2}\left(120 - \dfrac{4 \times 90}{3\pi}\right)}{240 \times 120 - \dfrac{\pi \times 90^2}{2}}$$

$\therefore \quad \bar{y} = 42.75$ mm

Centroid $G(\bar{x}, \bar{y}) = (120, 42.75)$ mm ***Ans.***

3. (b) A force $\bar{F}$ = 80 i + 50 j – 60 k passes through a point A(6, 2, 6). Compute its moment about point B(8, 1, 4). **[06]**

Solution

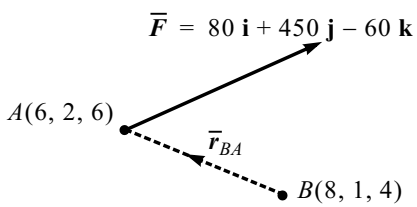

(i) Force vector ($\bar{F}$)

$\bar{F} = 80\,\mathbf{i} + 450\,\mathbf{j} - 60\,\mathbf{k}$

(ii) Position vector ($\bar{r}_{BA}$)

$\bar{r}_{BA} = \overline{BA}$

$\bar{r}_{BA} = -2\,\mathbf{i} + \mathbf{j} + 2\,\mathbf{k}$

(c) Moment vector ($\bar{M}_B$) about point B(8, 1, 4)

$\bar{M}_B = \bar{r}_{BA} \times \bar{F}$ (cross product)

$$\bar{M}_B = \begin{vmatrix} \mathbf{i} & \mathbf{j} & \mathbf{k} \\ -2 & 1 & 2 \\ 80 & 50 & -60 \end{vmatrix}$$

$\bar{M}_B = -160\,\mathbf{i} + 40\,\mathbf{j} - 180\,\mathbf{k}$ (N-m) ***Ans.***

3. (c) The platform *P* [Fig. 3(c)] has negligible mass and is tied down so that the 0.4 m long cords keep a 1 m long spring compressed to 0.6 m. when nothing is on the platform. If 4 kg block is placed on the platform and released from rest after the platform is pushed down 0.1 m, find the maximum height '*h*' the block rises in the air, measured from the ground. Use work - energy principle. **[06]**

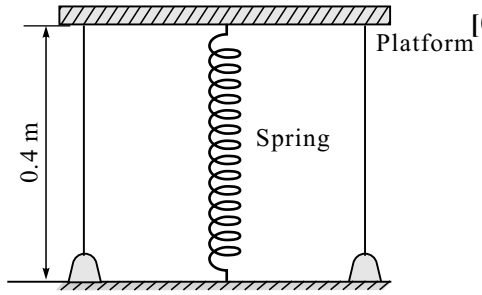

Fig. 3(c)

Solution

Assume $k = 1$ kN

By work - energy principle

Work done = Change in kinetic energy

$$\frac{1}{2} \times 1000(0.7^2 - 0.6^2) - 4 \times 9.81 \times h = 0 - 0$$

$h = 1.656$ m

Height from ground $H = h + 0.3$

$\therefore H = 1.956$ m ***Ans.***

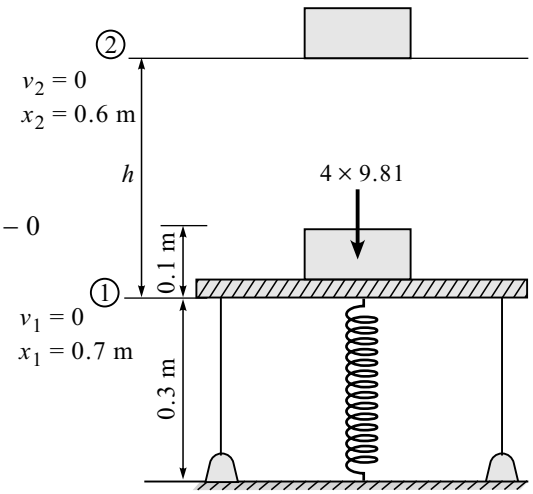

4. (a) Find the support reactions for the beam [Fig. 4(a)]. **[08]**

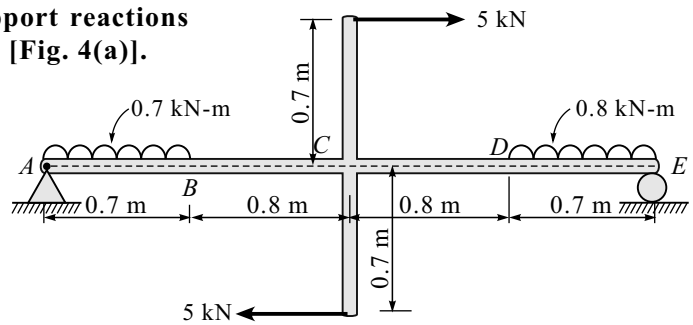

Fig. 4(a)

Solution

Consider the F.B.D. of the beam *AE*

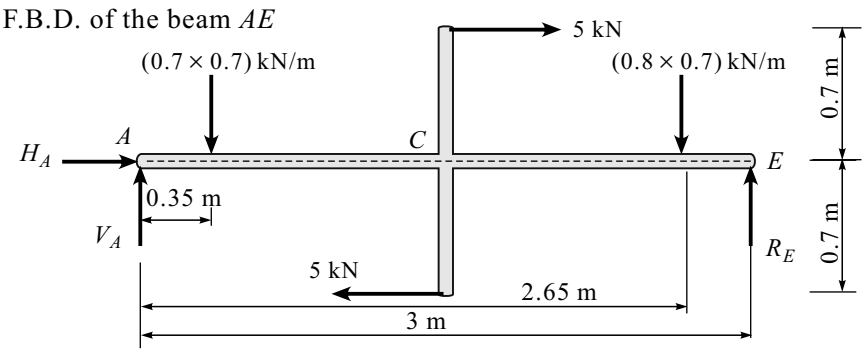

(i) $\Sigma M_A = 0$

$-0.7 \times 0.7 \times 0.35 - 5 \times 0.7 - 5 \times 0.7 - 0.8 \times 0.7 \times 2.65 + R_E \times 3 = 0$

$\therefore\ R_E = 2.88$ kN (↑) ***Ans.***

(ii) $\Sigma F_x = 0$

$H_A + 5 - 5 = 0$

$\therefore\ H_A = 0$ ***Ans.***

(iii) $\Sigma F_y = 0$

$V_A - (0.7 \times 0.7) - 0.8 \times 0.7 + R_E = 0$

$\therefore\ V_A = -1.83$ kN $= 1.83$ kN (↓) ***Ans.***

4. (b) Fig. 4(b) shows the *v-t* diagram for the motion of a train as it moves from station *A* to station *B*. Draw *a-t* graph and find the average speed of the train and the distance between the stations. **[06]**

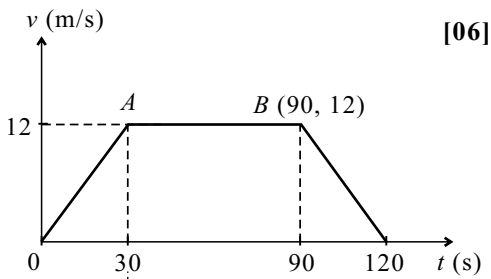

Fig. 4(b)

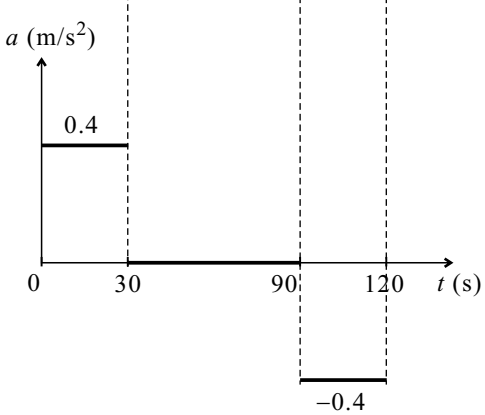

***a-t* diagram**

Solution

(i) Acceleration = Slope of *v-t* diagram

From 0 to 30 sec

$a = \dfrac{12}{30}$

$a = 0.4$ m/s^2

From 30 to 90 sec

$a = 0$

From 90 to 120 sec

$a = \dfrac{-12}{30} = -0.4$ m/s^2

(ii) Displacement = Area under *v-t* diagram

$s = \dfrac{1}{2} \times (120 \times 60) \times 12$

$s = 1080$ m

(iii) Average velocity $= \dfrac{\text{Displacement}}{\text{Time}}$

$v_{ave} = \dfrac{1080}{120}$

$\therefore\ v_{ave} = 9$ m/s

4. (c) A wheel is attached to the shaft of an electric motor of rated speed of 1740 rpm. When the power is turned on, the unit attains the rated speed in 5 seconds and when the power is turned off, the unit comes to rest in 90 seconds. Assuming uniformly accelerated motion, determine the number of revolutions the unit turns: (i) to attain the rated speed and (ii) to come to rest. **[06]**

Solution

Given : $N = 1740$ rpm, $t = 5$ sec

(i) $\omega = \dfrac{2\pi N}{60} = \dfrac{2 \times \pi \times 1740}{60}$

$\omega = 182.21$ rad/s

$\omega = \omega_0 + \alpha t$

$182.21 = 0 + \alpha \times 5$

$\alpha = 36.44$ rad/s^2

$\theta = \omega_0 + \dfrac{1}{2}\alpha t^2$

$\theta = 0 + \dfrac{1}{2} \times 36.44 \times 5^2$

$\therefore\ \theta = 455.53$ rad

$\therefore$ Number of revolutions the unit turns $= \dfrac{\theta}{2\pi} = \dfrac{455.53}{2\pi} = 72.5$ ***Ans.***

(ii) $\omega_0 = 182.21$ r/s, $\omega = 0$ and time $t = 90$ sec

$\omega = \omega_0 + \alpha t$

$0 = 182.21 + \alpha \times 90$

$\alpha = -2.025$ rad/s^2

$\theta = \omega_0 t + \dfrac{1}{2}\alpha t^2$

$\theta = 182.21 \times 90 + \dfrac{1}{2} \times (-2.025) \times 90^2$

$\therefore\ \theta = 8197.65$ rad

$\therefore$ Number of revolutions the unit turns $= \dfrac{\theta}{2\pi} = \dfrac{8197.65}{2\pi} = 1304.7$ ***Ans.***

5. (a) Using method of joints, find the forces in truss members [Fig. 5(a)]. **[08]**

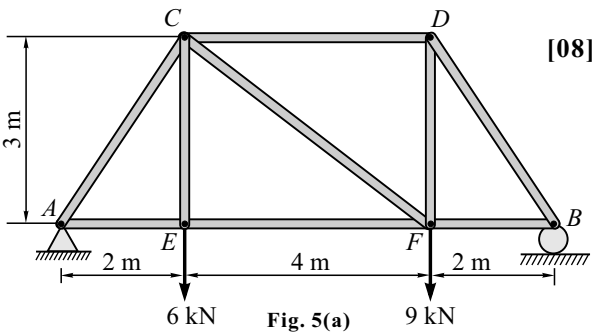

Fig. 5(a)

Consider the F.B.D. of the whole truss for finding the support reactions.

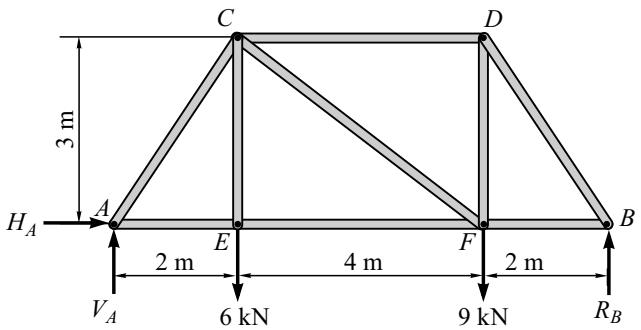

(i) $\Sigma M_A = 0$

$-6 \times 2 - 9 \times 6 + R_B \times 8 = 0$

$R_B = 8.25$ kN (↑)

(ii) $\Sigma F_x = 0$

$H_A = 0$

(iii) $\Sigma F_y = 0$

$V_A - 6 - 9 + R_B = 0$

$V_A = 6.75$ kN (↑)

Method of Joints

(i) Joint *A*

$\Sigma F_y = 0$

$F_{AC} \sin 56.3° + 6.75 = 0$

$\therefore F_{AC} = -8.11$ kN $= 8.11$ kN (C)

$\Sigma F_x = 0$

$F_{AC} \cos 56.3° + F_{AE} = 0$

$\therefore F_{AE} = 4.5$ kN (T)

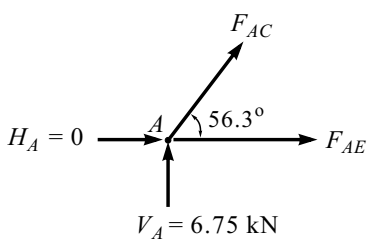

F.B.D. of *A*

(ii) Joint *E*

$\Sigma F_x = 0$

$F_{EF} - 4.5 = 0$

$\therefore F_{EF} = 4.5$ kN (T)

$\Sigma F_y = 0$

$F_{EC} - 6 = 0$

$\therefore F_{EC} = 6$ kN (T)

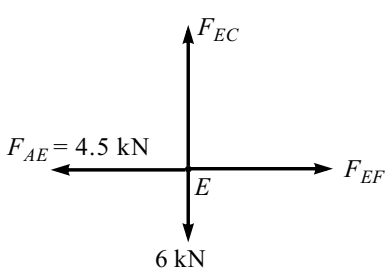

F.B.D. of *E*

(iii) Joint *B*

$\Sigma F_y = 0$

$-F_{AC} \sin 56.3° - 6 - F_{CF} \times \sin 56.3° = 0$

$\therefore F_{CF} = 1.24$ kN (T)

$\Sigma F_x = 0$

$F_{CD} + F_{CF} \times \cos 36.87° - F_{AC} \cos 56.3° = 0$

$F_{CD} = -5.5$ kN

$\therefore F_{CD} = 5.5$ kN (C)

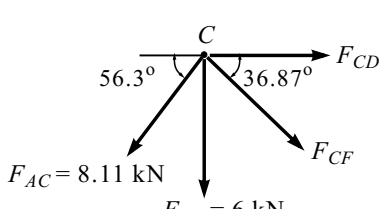

F.B.D. of *C*

(iv) Joint *F*

$\Sigma F_x = 0$

$F_{FB} - F_{FC} \cos 36.87° - F_{FE} = 0$

$\therefore F_{FB} = 5.5$ kN (T)

$\Sigma F_y = 0$

$F_{FD} - 9 + F_{EC} \sin 36.87° = 0$

$\therefore F_{FD} = 8.25$ kN (T)

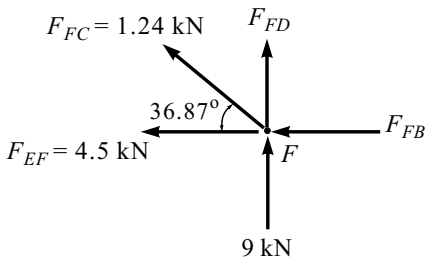

F.B.D. of *F*

5. (b) The *y* coordinate of a particle is given by $y = 6t^3 - 5t$. If $a_x = 14t$ m/sec^2 and $v_x = 4$ m/sec at $t = 0$, determine the velocity and acceleration of particle when $t = 1$ second. **[06]**

Solution

$y = 6t^3 - 5t$ ... (i)

At $t = 0$

$a_x = 14t$ m/sec^2

and $v_x = 4$ m/sec

Find $v = ?$ and $a = ?$ at $t = 1$ sec

Differentiating equation (i) w.r.t. time, we get

$v_y = 18t^2 - 5$ ... (ii)

At $t = 1$

$v_y = 18(1)^2 - 5 = 13$ m/s

Differentiating equation (ii) w.r.t. time, we get

$a_y = 36t$ ... (ii)

At $t = 1$

$a_y = 36(1) = 36$ m/s^2

Velocity at $t = 1$ second

$v = \sqrt{(v_x)^2 + (v_y)^2} = \sqrt{(4)^2 + (13)^2}$

$\therefore v = 13.6$ m/s ***Ans.***

Acceleration at $t = 1$ second

$a = \sqrt{(a_x)^2 + (a_y)^2} = \sqrt{(14)^2 + (36)^2}$

$\therefore a = 38.63$ m/s^2 ***Ans.***

5. (c) For crank of connecting mechanism shown in Fig. 5(c), determine the instantaneous centre of rotation of connecting rod at position shown. The crank *OQ* rotates clockwise at 310 rpm. Crank length = 10 cm, connecting rod length = 50 cm. Also find the velocity of *P* and angular velocity of rod at that instant. **[06]**

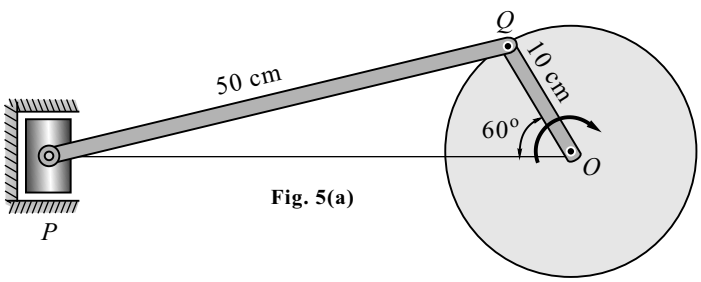

Fig. 5(a)

Solution

(i) $\omega_{OQ} = 310 \text{ rpm} = 310 \times \frac{2\pi}{60}$ rad/sec

$\omega_{OQ} = 32.46$ rad/sec

(ii) ΔOPQ by sine rule we get

$$\frac{10}{\sin \alpha} = \frac{50}{\sin 60°}$$

$\alpha = 9.97°$

(iii) Crank OQ

$v_Q = (OQ)(\omega_{OQ})$

$v_Q = 10 \times 32.46$

$v_Q = 324.6$ cm/s

(iv) ΔIPQ by sine rule we get

$$\frac{PQ}{\sin 30} = \frac{IA}{\sin 69.97°} = \frac{IQ}{\sin 80.09°}$$

$\therefore\ IP = 93.95$ cm

$IQ = 98.48$ cm

Rod PQ

$v_Q = (IQ)(\omega_{PQ})$

$\omega_{PQ} = 3.29$ r/s (↺) ***Ans.***

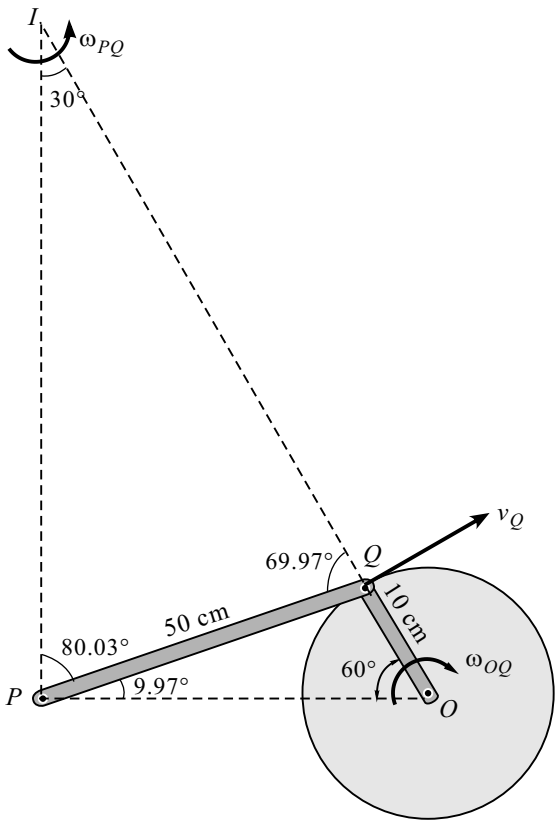

(v) $v_P = (IP)(\omega_{PQ})$

$= 93.95 \times 3.29$

$\therefore\ v_P = 309$ cm/s (→) ***Ans.***

6. (a) Discuss the resultant of concurrent forces in space. **[04]**

Solution : Refer : *Text Book*

6. (b) A ladder of 4 m length weighing 200 N is placed as shown in Fig. 6(b). μ_B = 0.25 and μ_A = 0.35. Calculate the minimum horizontal force to be applied at *A* to prevent slipping. **[08]**

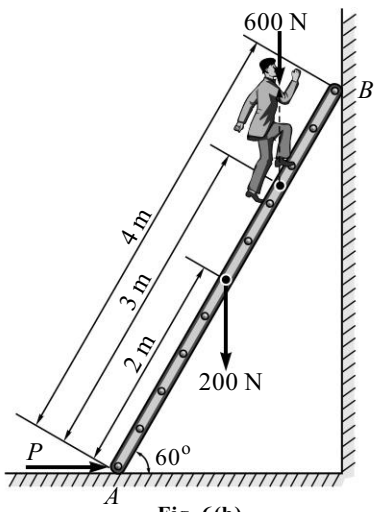

Fig. 6(b)

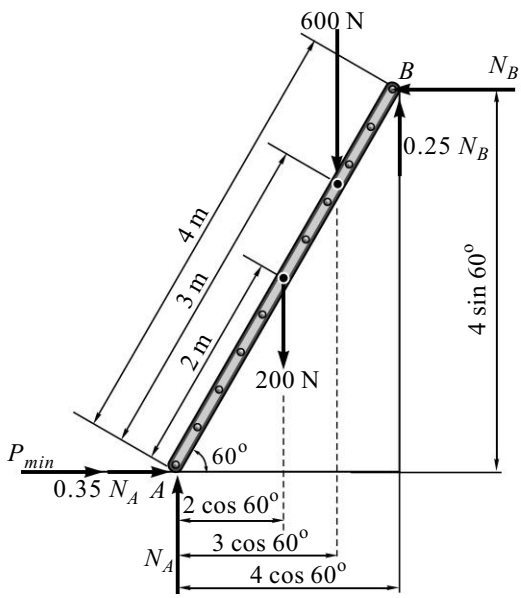

F.B.D. of the Ladder

Solution

Consider the F.B.D. of the ladder

(i) $\Sigma M_A = 0$

$-200 \times 2 \cos 60^\circ - 600 \times 3 \cos 60^\circ$

$+ 0.25 N_B \times 4 \cos 60^\circ + N_B \times 4 \sin 60^\circ = 0$

$\therefore N_B = 277.49$ N

(ii) $\Sigma F_y = 0$

$N_A + 0.25 N_B - 200 - 600 = 0$

$\therefore N_A = 730.62$ N

(iii) $\Sigma F_x = 0$

$P_{min} + 0.35 N_A - N_B = 0$

$\therefore P_{min} = 21.773$ N $(\rightarrow)$ ***Ans.***

6. (c) With what minimum horizontal velocity (u) can a boy threw a rock at A and have it just clear the obstruction at B? Refer Fig. 6(c). **[04]**

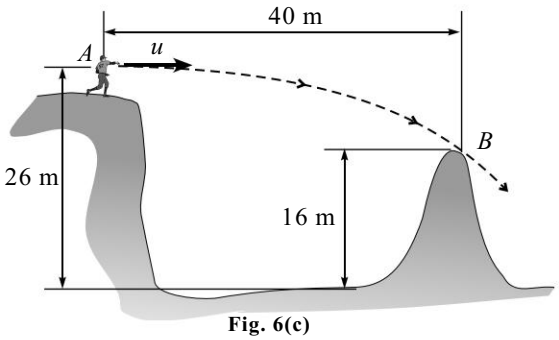

Fig. 6(c)

Solution

$x = 40$ m, $y = -10$ m and $\theta = 0$

$$y = x \tan\theta - \frac{gx^2}{2u^2}(1 + \tan^2\theta)$$

$$-10 = 40 \tan\theta - \frac{9.81 \times 40^2}{2u^2}(1 + \tan^2\theta)$$

$$u^2 = \frac{9.81 \times 40^2}{2 \times 10}$$

$\therefore\ u = 28.01$ m/s (→) ***Ans.***

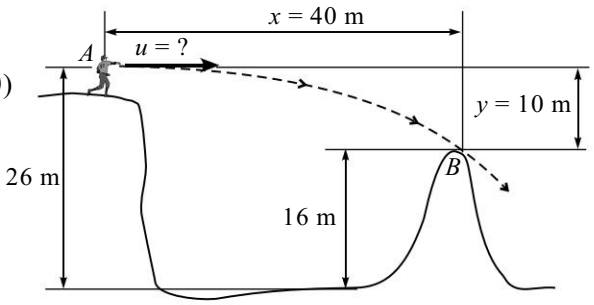

6. (d) Two masses of 60 N and 30 N are positioned over frictionless and massless pulley [Fig. 6(d)]. If the 60 N mass is released from rest, find the speed at which the 60 N. mass will hit the ground. **[04]**

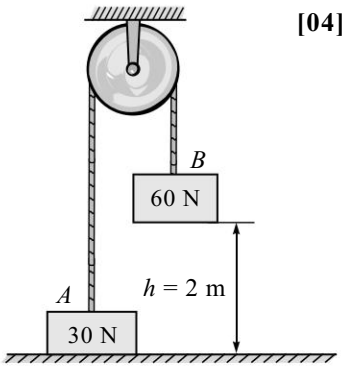

Fig. 6(d)

Solution

(i) Consider the F.B.D. of block A

By Newton's second law, we have

$\Sigma F_y = ma_y$

$$T - 80 = \frac{30}{9.81}a$$

$T - 3.05\,a = 30$ ... (i)

(ii) Consider the F.B.D. of block B

By Newton's second law, we have

$\Sigma F_y = ma_y$

$$60 - T = \frac{60}{9.81}a$$

$-T - 6.11\,a = -60$ ... (ii)

Solving equations (i) and (ii)

$\therefore\ a = 3.27$ m/s^2

$T = 40$ N

(iii) $v^2 = u^2 + 2as = 0 + 2 \times 3.27 \times 2$

$\therefore\ v = 3.61$ m/s ***Ans.***

[04]

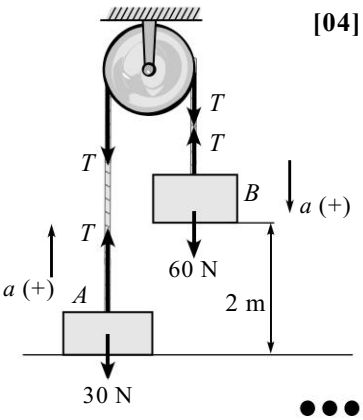

●●●

DECEMBER - 2015

1. (a) Three concurrent forces P = 150 N, Q = 250 N and S = 300 N are acting at 120° with each other. Determine their resultant force magnitude and direction with respect to P. What their equilibrant ? **[04]**

Solution

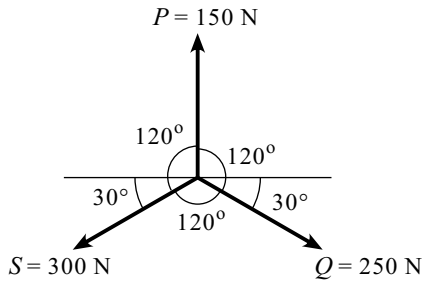

(i) $\Sigma F_x = 250 \cos 30^o - 300 \cos 30^o = -43.30$ N

$\therefore \Sigma F_x = 43.30$ N (←) ***Ans.***

(ii) $\Sigma F_y = 150 - 250 \sin 30^o - 300 \sin 30^o = -125$ N

$\therefore \Sigma F_y = 125$ N (↓) ***Ans.***

(iv) $\theta = \tan^{-1}\left(\frac{125}{43.30}\right)$

$\therefore \theta = 70.89^o$ ***Ans.***

(iii) $R = \sqrt{(43.30)^2 + (125)^2}$

$R = 152.28$ N ***Ans.***

(v) Resultant force

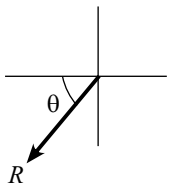

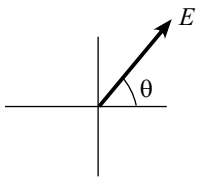

(vi) Equilibrant is equal in magnitude and opposite in direction to that of the resultant.

1. (b) A prismatic bar AB of length 6 m and weight 3 kN is hinged to a wall and supported by a cable BC. Find hinge reaction and tension in cable BC. **[04]**

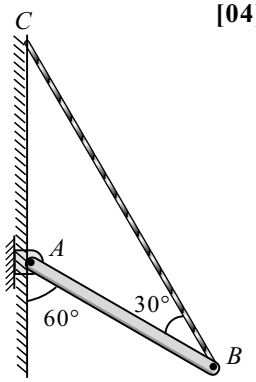

Fig. 1(b)

Solution

(i) $\Sigma M_A = 0$

$-3 \times 3 \cos 30^o - T \cos 60^o \times 6 \sin 30^o + T \sin 60^o \times 6 \cos 30^o = 0$

$\therefore T = 2.598$ kN ***Ans.***

(ii) $\Sigma F_x = 0$

$H_A - T \cos 60^o = 0$

$\therefore H_A = 1.299$ kN (→) ***Ans.***

(iii) $\Sigma F_y = 0$

$V_A - 3 + T \sin 60^o = 0$

$\therefore V_A = 0.75 \text{ kN } (\uparrow)$ ***Ans.***

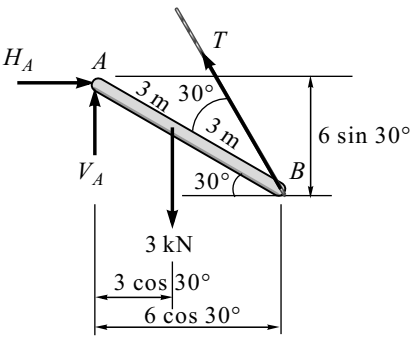

(iv) $\theta = \tan^{-1}\left(\frac{0.75}{1.29}\right)$

$\therefore \theta = 30.17^o$ ***Ans.***

(iv) $R_A = \sqrt{(1.299)^2 + (0.75)^2}$

$R_A = 1.5 \text{ kN } \left(\measuredangle 30.17°\right)$ ***Ans.***

1. (c) A block of weight 800 N is acted upon by a horizontal force *P* as shown in Fig. 1(c). If the coefficient of friction between the block and incline are μ_S = 0.35 and μ_K = 0.25, determine the value of *P* for impending motion up the plate. **[04]**

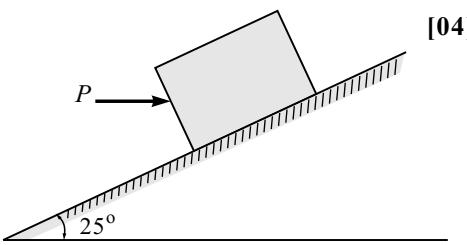

Fig. 1(c)

Solution

Force *P* required to start the block moving up the plane

Consider the F.B.D. of the block

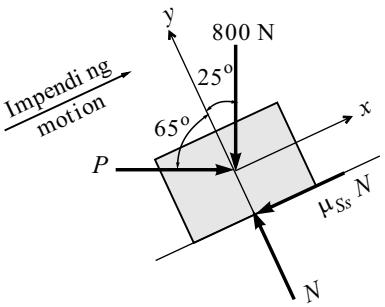

F.B.D. of Block

(i) $\Sigma F_y = 0$

$N - 800 \cos 25^o - P \cos 65^o = 0$

$N = 800 \cos 25^o + P \cos 65^o$

(ii) $\Sigma F_x = 0$

$P \sin 65^o - \mu_S N - 800 \sin 25^o = 0$

$P \sin 65^o - 0.35(800 \cos 25^o + P \cos 65^o) - 800 \sin 25^o = 0$

$P \sin 65^o - 0.35 \times P \cos 65^o - 0.35 \times 800 \cos 25^o - 800 \sin 25^o = 0$

$P (\sin 65^o - 0.35 \cos 65^o) = 0.35 \times 800 \cos 25^o + 800 \sin 25^o$

$P = 780.42 \text{ N}$ ***Ans.***

1. (d) A hot air balloon starts rising vertically up from the ground with an acceleration of 0.2 m/s^2. 12 seconds later the man sitting inside the balloon releases a stone. Find the time taken by the stone to hit the ground. **[04]**

Solution

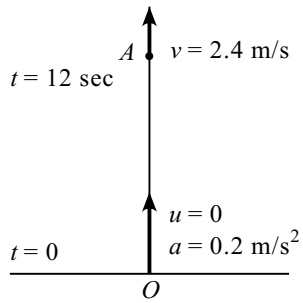

(i) Motion from O to A

$v = u + at$

$v = 0 + 0.2 \times 12$

$v = 2.4$ m/s (↑) ***Ans.***

$h = ut + \frac{1}{2}at^2$

$h = 0 + \frac{1}{2} \times 0.2 \times 12^2$

$h = 14.4$ m ***Ans.***

(ii) Motion from A to O (Gravity on stone)

$h = ut + \frac{1}{2}at^2$

$-h = 2.4\,(t) + \frac{1}{2} \times (-9.81) \times t^2$

$t = 1.97$ sec ***Ans.***

1. (e) A small block rests on a turn table, 0.5 m away from its centre. The turn table, starting from rest, is rotated in such a way that the block undergoes a constant tangential acceleration. Determine the angular velocity of the turn table at the instant when the block starts slipping. $\mu = 0.4$, $a_t = 1.8$ m/s^2. **[04]**

Solution

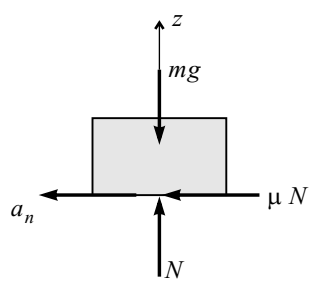

F.B.D. of Block

(i) Consider the F.B.D. of block

$\Sigma F_z = ma_z = 0 \quad (\because a_z = 0)$

$N - mg = 0$

$N = mg$

(ii) By Newton's second law

$F = ma \quad (\because a_z = 0)$

$\mu_s N = ma$

$0.4(m \times 9.81) = ma$

$a = 3.924$ m/s^2

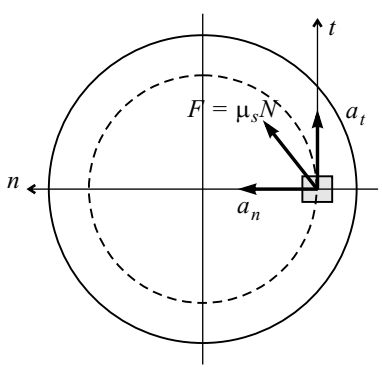

(iii) $a = \sqrt{a_t^2 + a_n^2}$

$3.924 = \sqrt{1.8^2 + a_n^2}$

$a_n = 3.486$ m/s^2

(iv) $a_n = \frac{v^2}{\rho}$

$3.486 = \frac{v^2}{0.5} \quad \therefore v = 1.32$ m/s ***Ans.***

(v) $v = u + at$

$1.32 = 0 + 1.8 \times t$

$t = 0.73$ sec ***Ans.***

2. (a) Three right circular cylinders *A*, *B*, *C* are piled up in a rectangular channel as shown in Fig. 2(a). Determine the reactions at point 6 between the cylinder *A* and vertical wall of the channel.
(Cylinder A : radius = 4 cm, mass = 15 kg.
Cylinder B : radius = 6 cm, mass = 40 kg.
Cylinder C : radius = 5 cm, mass = 20kg.) **[08]**

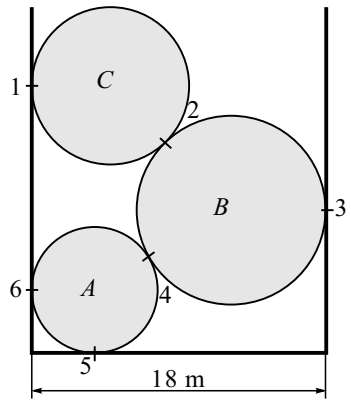

Fig. 2(a)

Solution

(i) Consider F.B.D. of entire system

$\cos\theta = \frac{8}{10}$

$\therefore \theta = 36.87°$

$\Sigma F_y = 0$

$R_5 - 20 \times 9.81 - 40 \times 9.81 - 15 \times 9.81 = 0$

$R_5 = 735.75$ N ***Ans.***

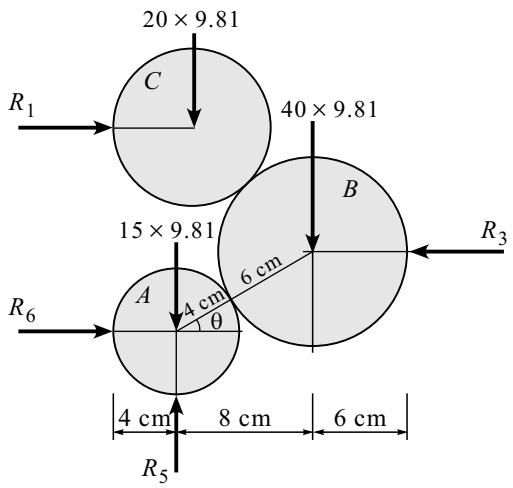

(ii) Consider F.B.D. of cylinder *A*.

$\Sigma F_y = 0$

$735.75 - 15 \times 9.81 - R_4 \sin 36.87 = 0$

$R_4 = 981$ N ***Ans.***

$\Sigma F_x = 0$

$R_6 - R_4 \cos 36.87 = 0$

$R_6 = 784.8$ N $(\rightarrow)$ ***Ans.***

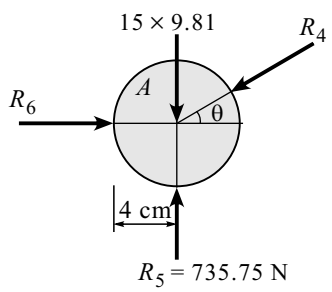

2. (b) Four forces and a couple are acting on a plate as shown in Fig. 2(b). Determine the resultant force and locate it with respect to point *A*. **[06]**

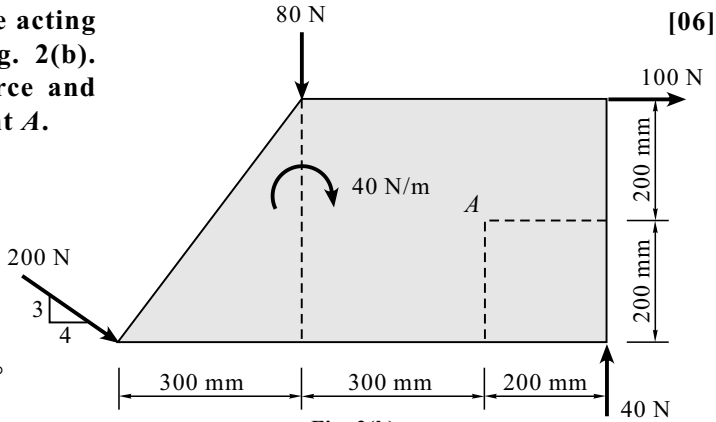

Fig. 2(b)

Solution

$$\theta = \tan^{-1}\left(\frac{3}{4}\right) \quad \therefore \quad \theta = 36.87^{\circ}$$

(i) $\Sigma F_x = 100 + 200 \cos 36.87°$

$\Sigma F_x = 260 \text{ N } (\rightarrow)$

(ii) $\Sigma F_y = 40 - 80 - 200 \sin 36.87°$

$\Sigma F_y = -160 \text{ N} = 160 \text{ N } (\downarrow)$

(iii) $R = \sqrt{(260)^2 + (160)^2}$

$R = 305.28 \text{ N}$ ***Ans.***

(iv) $\phi = \tan^{-1}\left(\frac{160}{260}\right) = 31.6°$ ***Ans.***

(v) $\Sigma M_A = -40 - 100 \times 200 + 40 \times 200$
$+ 200 \cos 36.87° \times 200$
$+ 200 \sin 36.87° \times 600 + 80 \times 300$

$\Sigma M_A = 115960.12 \text{ N-mm } (\circlearrowleft)$

(vi) By Varignon's theorem, we have

$$d = \left(\frac{\Sigma M_A}{R}\right) = 380 \text{ mm} \quad \textbf{\textit{Ans.}}$$

(vii) Position of *R* w.r.t. point *A*

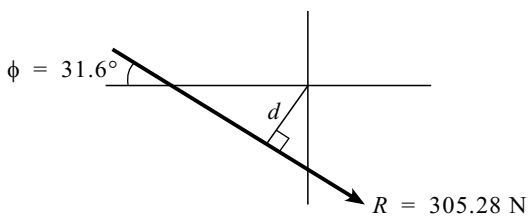

2. (c) Two balls with masses 20 kg and 30 kg are moving towards each other with velocities 10 m/s and 5 m/s respectively. If after impact the ball having mass 30 kg reverses its direction of motion and moves with velocity 6 m/s, then determine the coefficient of restitution between the two balls. **[06]**

Solution : Refer : *Text Book - Pg. 15.10, Problem 4*

3. (a) Determine the centroid of me shaded area. All dimensions are in mm. **[08]**

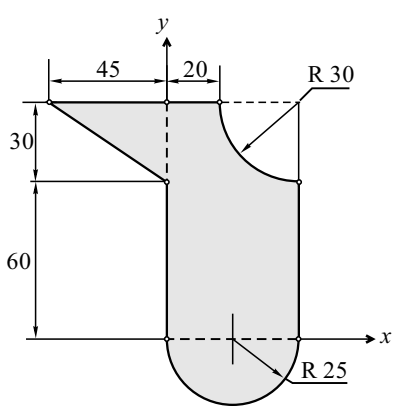

Solution

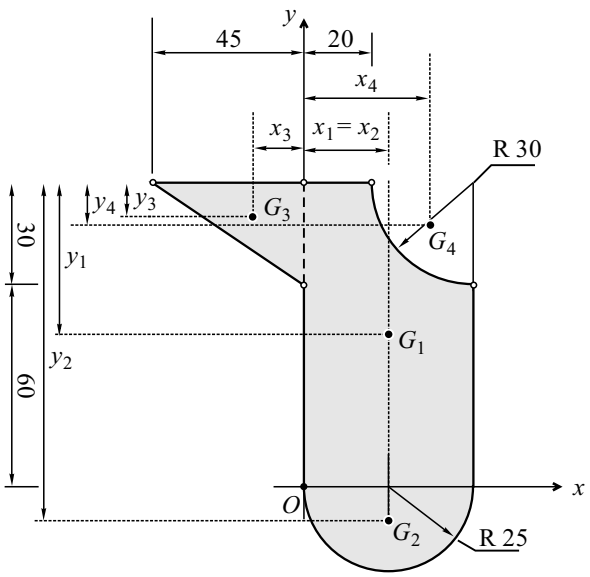

(i) $$\bar{x} = \frac{\frac{\pi \times 25^2}{2} \times 25 + 50 \times 90 \times 25 + \frac{1}{2} \times 30 \times 45 \times (-15) - \frac{\pi \times 30^2}{4}\left(50 - \frac{4 \times 30}{3\pi}\right)}{\frac{\pi \times 25^2}{2} + 50 \times 90 + \frac{1}{2} \times 30 \times 45 - \frac{\pi \times 30^2}{4}}$$

$$\bar{x} = \frac{24543.64 + 112500 - 10125 - 26342.92}{981.74 + 4500 + 675 - 706.86} = 18.46 \text{ mm}$$

(ii) $$\bar{y} = \frac{\frac{\pi \times 25^2}{2}\left(-\frac{4 \times 25}{3\pi}\right) + 50 \times 90 \times 45 + \frac{1}{2} \times 30 \times 45 \times 80 - \frac{\pi \times 30^2}{4}\left(90 - \frac{4 \times 30}{3\pi}\right)}{\frac{\pi \times 25^2}{2} + 50 \times 90 + \frac{1}{2} \times 30 \times 45 - \frac{\pi \times 30^2}{4}}$$

$$\bar{y} = \frac{-10416.67 + 202500 + 54000 - 54617.25}{981.74 + 4500 + 675 - 706.86} = 35.13 \text{ mm}$$

$\therefore$ Coordinates of centroid w.r.t. origin O are $\boldsymbol{G}$ (18.46, 35.13) mm. ***Ans.***

3. (b) Force 5 kN is acting along *AB* where *A*(0, 0, –l) m and *B*(5, –2, –4) m. Another force 8 kN is acting along *BC* where *C*(3, 3, 4) m. Find resultant of two forces and find moment of resultant force about a point *D*(0, 3, –2) m. **[06]**

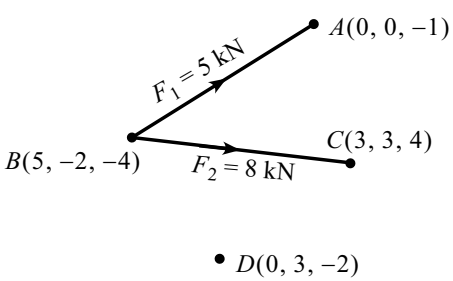

Solution

(i) Force vector

$$\bar{F}_1 = (F_1)(\bar{e}_{AB})$$

$$\bar{F}_1 = (5)\left(\frac{-5\,\mathbf{i} + 2\,\mathbf{j} + 3\,\mathbf{k}}{\sqrt{5^2 + 2^2 + 3^2}}\right)$$

$$\bar{F}_1 = -4.05\,\mathbf{i} + 1.62\,\mathbf{j} + 2.43\,\mathbf{k}$$

$$\bar{F}_2 = (F_2)(\bar{e}_{BC})$$

$$\bar{F}_2 = (8)\left(\frac{-2\,\mathbf{i} + 5\,\mathbf{j} + 8\,\mathbf{k}}{\sqrt{2^2 + 5^2 + 8^2}}\right)$$

$$\bar{F}_2 = -1.65\,\mathbf{i} + 4.14\,\mathbf{j} + 6.63\,\mathbf{k}$$

(ii) Resultant

$$\bar{R} = \bar{F}_1 + \bar{F}_2$$

$$\bar{R} = -6.45\,\mathbf{i} + 5.76\,\mathbf{j} + 9.06\,\mathbf{k} \quad \textit{Ans.}$$

(iii) Position vector ($\bar{r}_{DA}$)

$$\bar{r}_{DA} = \overline{DA}$$

$$\bar{r}_{DA} = -3\,\mathbf{i} + \mathbf{k}$$

(iv) Moment about a point $D(0, 3, -2)$ m

$$\bar{M}_D = \bar{r}_{DA} \times \bar{F} \quad \text{(cross product)}$$

$$\bar{M}_D = \begin{vmatrix} \mathbf{i} & \mathbf{j} & \mathbf{k} \\ -3 & 0 & 1 \\ -6.45 & 5.76 & 9.06 \end{vmatrix}$$

$$\bar{M}_D = -5.76\,\mathbf{i} + 20.73\,\mathbf{j} - 17.28\,\mathbf{k} \text{ (kN-m)} \quad \textit{Ans.}$$

3. (c) **A 2 kg collar *M* is attached to a spring and slides without friction in a vertical plane along the curved rod *ABC* as shown in Fig. 3(c). The spring has an undeformed length of 100 mm and its stiffness *k* = 800 N/m. If the collar is released from rest at *A*, determine its velocity (i) as it passes through *B*, (ii) as it reaches *C*.** **[06]**

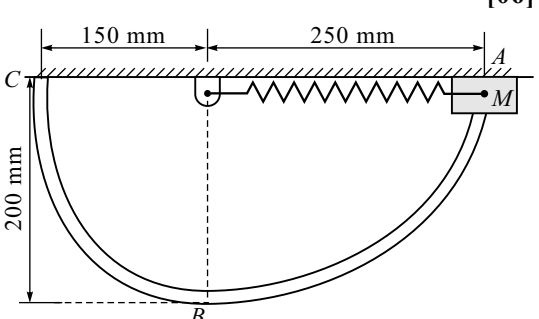

Fig. 3(c)

Solution : Refer : *Text Book - Pg. 14.13, Problem 11*

4. (a) Find support reactions at *A* and *B* for the beam loaded as shown in Fig. 4(a). *A* is hinged and *B* is roller. **[08]**

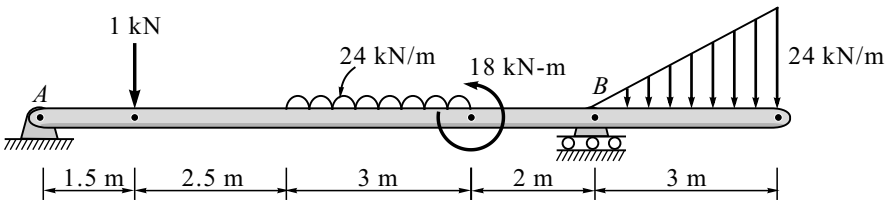

Fig. 4(a)

Solution

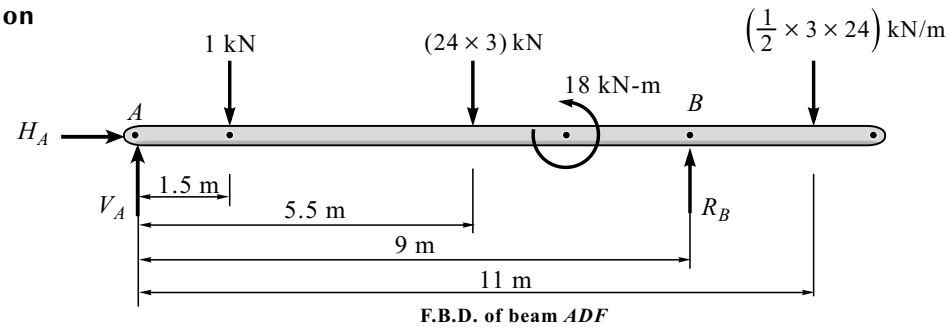

F.B.D. of beam *ADF*

(i) Consider the F.B.D. of the beam *AB* with equivalent point load is shown in above figure.

(ii) $\Sigma M_A = 0$

$-1 \times 1.5 - 24 \times 3 \times 5.5 + 18 + R_B \times 9 - \frac{1}{2} \times 3 \times 24 \times 11 = 0$

$R_B = 86.16$ kN ***Ans.***

(iii) $\Sigma F_x = 0$

$H_A = 0$ ***Ans.***

(iv) $\Sigma F_y = 0$

$V_B - 1 - 24 \times 3 - \frac{1}{2} \times 3 \times 24 = 0$

$V_A = 109$ kN (↑) ***Ans.***

4. (b) An object is projected so that it just clears two obstacles each of 7.5 m height, which are situated 50 m from each other. If the time of passing between the obstacles is 2.5 s, calculate the complete range of projection and the initial velocity of the projectile. **[06]**

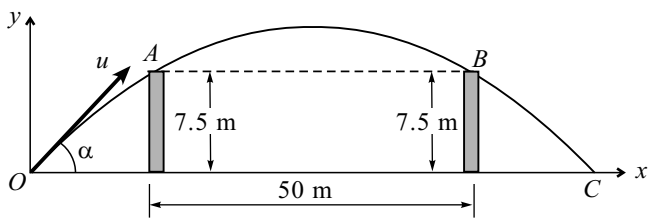

Fig. 4(b)

Solution : Refer : *Text Book - Pg. 11.29, Problem 22*

4. (c) The crank *BC* of a slider crank mechanism is rotating at constant speed of 30 rpm clockwise. Determine the velocity of the piston *A* at the given instant. *AB* = 400 mm and *BE* = 100 mm. **[06]**

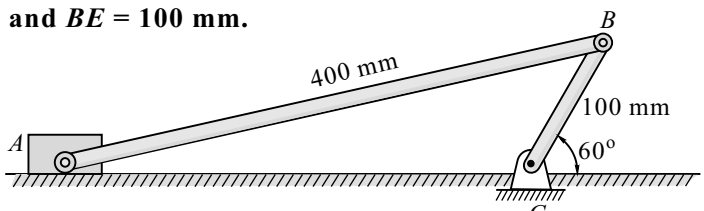

Fig. 4(c)

Solution : Refer : *Text Book - Pg. 12.22, Problem 16*

5. (a) For the truss shown in Fig. 5(a), determine,

(a) Support reactions **[02]**

(b) Forces in members *CE* and *CF* by method of sections only. **[02]**

(c) Forces in any other four members by method of joints. **[04]**

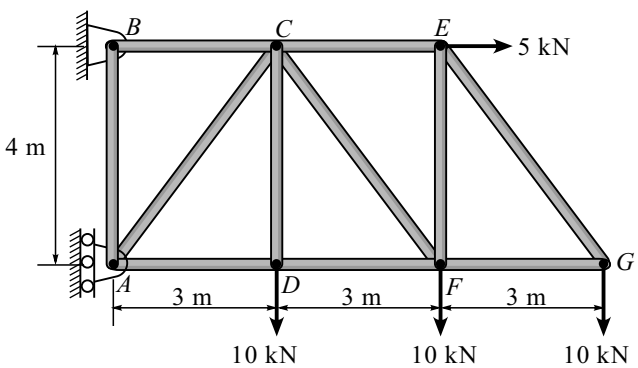

Solution

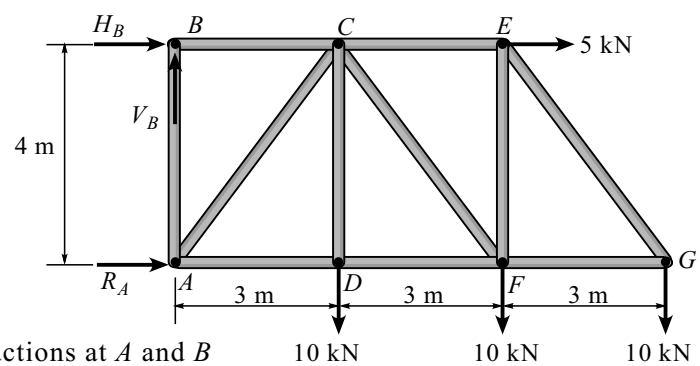

(a) Support reactions at *A* and *B*

(i) $\Sigma M_B = 0$

$R_A \times 4 - 10 \times 3 - 10 \times 6 - 10 \times 9 = 0$

$\therefore R_A = 45 \text{ kN } (\rightarrow)$ ***Ans.***

(ii) $\Sigma F_x = 0$

$H_B + 5 + R_A = 0$

$\therefore H_B = -50 \text{ kN} = 50 \text{ kN } (\leftarrow)$ ***Ans.***

(iii) $\Sigma F_y = 0$

$V_B - 10 - 10 - 10 = 0$

$\therefore\ V_B = 30 \text{ kN } (\uparrow)$ ***Ans.***

(iv) $\theta = \tan^{-1}\left(\dfrac{30}{50}\right) = 30.96°$ ***Ans.***

(v) $R_B = \sqrt{(V_B)^2 + (H_B)^2} = \sqrt{(30)^2 + (50)^2}$

$\therefore\ R_B = 44.67 \text{ kN } (\theta)$ ***Ans.***

(b) Forces in members *CE* and *CF* by method of sections

Consider the F.B.D. of the right part of truss, section along (s)-(s)

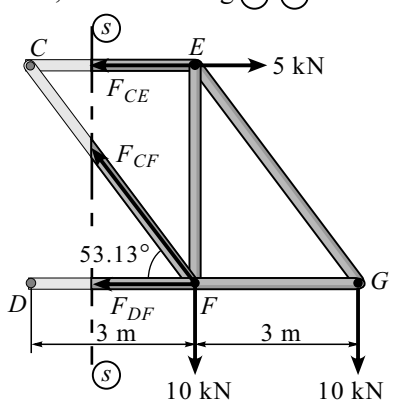

(i) $\Sigma F_y = 0$

$F_{CF} \sin 53.13^o - 10 - 10 = 0$

$\therefore\ F_{CF} = 25 \text{ kN (Tension)}$

(ii) $\Sigma M_F = 0$

$F_{CE}\ 4 - 5 \times 4 - 10 \times 3 = 0$

$\therefore\ F_{CE} = 12.5 \text{ kN (Tension)}$

(iii) Method of Joints

Applying conditions of equilibrium to each joint.

Joint *G*

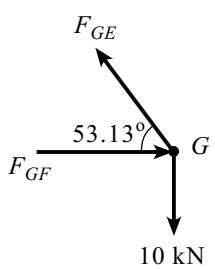

$\Sigma F_y = 0$

$F_{GE} \sin 53.13^o - 10 = 0$

$\therefore\ F_{GE} = 12.5 \text{ kN (T)}$ ***Ans.***

$\Sigma F_x = 0$

$-F_{GE} \cos 53.13^o + F_{GF} = 0$

$\therefore\ F_{GF} = 7.5 \text{ kN (C)}$ ***Ans.***

Joint *E*

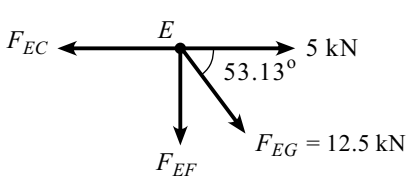

$\Sigma F_y = 0$

$-F_{EG} \sin 53.13^o - F_{EF} = 0$

$\therefore\ F_{EF} = -10 \text{ kN} = 10 \text{ kN (C)}$ ***Ans.***

$\Sigma F_x = 0$

$-F_{EC} + 5 + F_{EG} \cos 53.13^o = 0$

$\therefore\ F_{EC} = 12.5 \text{ kN (T)}$ ***Ans.***

Joint *F*

$\Sigma F_y = 0$

$F_{FE} + F_{FC} \sin 53.13^o - 10 = 0$

$\therefore F_{FC} = 25$ kN (T) ***Ans.***

$\Sigma F_x = 0$

$F_{FG} - F_{FD} - F_{FC} \cos 53.13^o = 0$

$\therefore F_{FD} = -7.5$ kN $= 7.5$ kN (C) ***Ans.***

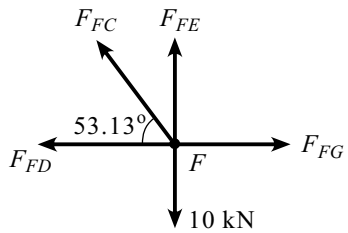

Joint *B*

$\Sigma F_x = 0$

$F_{BC} = 50$ kN (T)

$F_{AB} = 30$ kN (T) ***Ans.***

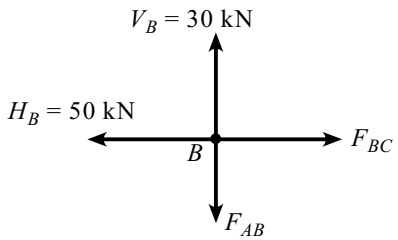

5.(b) A particle moves in a straight line with acceleration-time diagram shown in Fig. 5(b). Construct velocity-time diagram for the motion assuming that the motion starts with initial velocity of 5 m/s from the starting point. Also determine its displacement at t = 12 seconds. **[06]**

Solution : Refer : *Text Book - Pg. 10.61, Problem 52*

5. (c) Due to slipping, points *A* and *B* on the rim of the disk have the velocities v_a = 1.5 m/s to the right and v_b = 3 m/s to the left as shown in Fig. 5(c). Determine the velocities of the centre point *C* and point *D* on the rim at this instant. Take radius of disk 0.24 m. **[06]**

Solution : Refer : *University Paper Solution, May 14, 5. (b)*

6. (a) Find force requires to pull block *B* as shown in Fig. 6(a). Coefficient of friction between *A* and *B* is 0.3 and between *B* and floor is 0.25. Mass of *A* = 40 kg and *B* = 60 kg. **[08]**

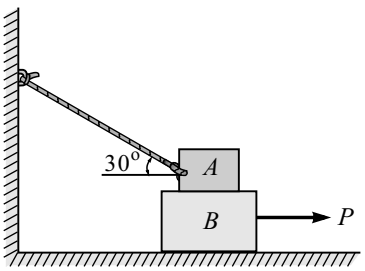

Fig. 6(a)

Solution

(i) Consider the F.B.D. of block *A*.

$\Sigma F_y = 0$

$N_A + T \sin 30^o - 40 \times 9.81 = 0$

$N_A = 40 \times 9.81 - T \sin 30^o$

$\Sigma F_x = 0$

$T \cos 30^o - 0.3\, N_A = 0$

$T \cos 30^o - 0.3(40 \times 9.81 - T \sin 30^o) = 0$

$T = 115.86$ N and $N_A = 334.42$ N ***Ans.***

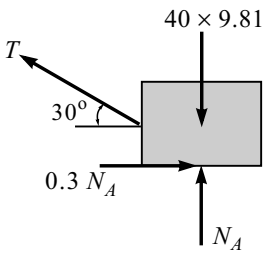

F.B.D. of Block *A*

(ii) Consider the F.B.D. of block B.

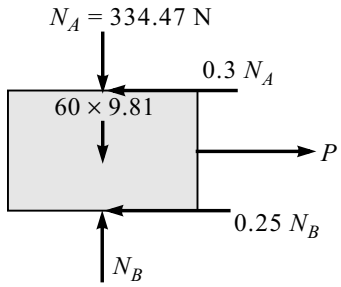

F.B.D. of Block *B*

$\Sigma F_y = 0$

$N_B - 60 \times 9.81 - 334.47 = 0$

$N_B = 923.07$ N ***Ans.***

$\Sigma F_x = 0$

$P - 0.3\, N_A - 0.25\, N_B = 0$

$P = (0.3 \times 334.47) + (0.25 \times 923.07)$

$P = 331.10$ N (→) ***Ans.***

6. (b) A force acts at the origin in a direction defined by the angles θ_y = 65° and θ_z = 40°. Knowing that the *x*-component of the force is –750 N, determine (i) the other components (ii) magnitude of the force (iii) the value of θ_x. **[04]**

Solution

(i) By direction cosine rule, we have

$\cos^2 \theta_x + \cos^2 \theta_y + \cos^2 \theta_z = 1$

$\cos^2 \theta_x + \cos^2 65° + \cos^2 40° = 1$

$\cos^2 \theta_x = 0.234$

Consider the negative value $F_x = -750$ kN

$\cos \theta_x = -0.484$

$\therefore\ \theta_x = 118.95°$ ***Ans.***

(ii) x-component of force F_x

$F_x = F \cos \theta_x$

$-750 = F \cos 118.95°$

$F = 1549.44$ kN ***Ans.***

$F_y = F \cos \theta_y = 1549.44 \cos 65°$

$F_y = 654.82$ kN ***Ans.***

$F_x = F \cos \theta_y = 1549.44 \cos 40°$

$F_x = 1186.94$ kN ***Ans.***

6. (c) A particle travels on a circular path, whose distance travelled is defined by $s = (0.5\, t^3 + 3t)$ m. If the total acceleration is 10 m/s^2, at t = 2 sec, find its radius of curvature. **[04]**

Solution

Given : $s = (0.5\, t^3 + 3t)$

$$\frac{ds}{dx} = v = 1.5\, t^2 + 3$$

Put $t = 2$ sec

$$\therefore \quad v = 6 + 3 = 9 \text{ m/s}$$

$$\frac{dv}{dt} = a_t = 3t$$

At $t = 2$ sec

$$a_t = 6 \text{ m/s}^2$$

$$a = \sqrt{a_t^2 + a_n^2}$$

$$a_n = \sqrt{a^2 - a_n^2}$$

$$a_n = 8 \text{ m/s}^2$$

$$a_n = \frac{v^2}{\rho}$$

$$\rho = \frac{v^2}{a_n}$$

$$\rho = 10.125 \text{ m} \quad \textbf{\textit{Ans.}}$$

6. (d) Block *A* and *B* of mass 6 kg and 12 kg respectively are connected by a string passing over a smooth pulley. Neglect mass of pulley. If coefficient of kinetic friction between the block *A* and the inclined surface is 0.2, determine the acceleration of block *A* and block *B*. **[04]**

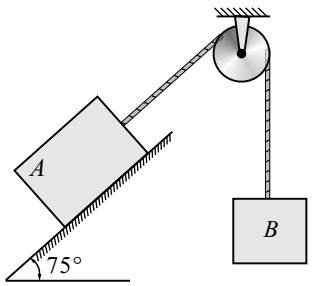

Fig. 6(d)

Solution

(i) Consider the F.B.D. of block *A*

$$\Sigma F_y = ma_y = 0$$

$$N - 6 \times 9.81 \cos 75^\circ = 0$$

$$N = 15.234 \text{ N}$$

By Newton's second law

$$\Sigma F_x = ma_x$$

$$T - 0.2\,N - 6 \times 9.81 \sin 75^\circ = 6a$$

$$T - 6a = 59.90 \qquad \text{... (i)}$$

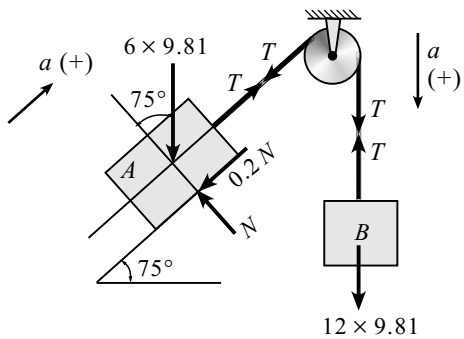

(ii) Consider the F.B.D. of block *B*

$$\Sigma F_y = ma_y$$

$$12 \times 9.81 - T = 12a$$

$$-T - 12a = -117.72 \qquad \text{... (ii)}$$

Solving equations (i) and (ii)

$$T = 8.64 \text{ N} \quad \textbf{\textit{Ans.}}$$

$$a = 6.54 \text{ m/s}^2 \quad (a = a_A = a_B) \quad \textbf{\textit{Ans.}}$$

●●●

Reference Books

1. *Engineering Mechanics* by Beer and Johnson
2. *Engineering Mechanics* by R. C. Hibbeler
3. *Engineering Mechanics* by Timoshenko
4. *Engineering Mechanics* by Singer
5. *Engineering Mechanics* by I. H. Shames
6. *Engineering Mechanics* by V. S. Mokashi
7. *Engineering Mechanics* by J. L. Meriam
8. *Engineering Mechanics* by A. K. Tayal
9. *Engineering Mechanics* by B. N. Thadani