LM340, LM340A and LM7805 Family Wide V_{IN} 1.5-A Fixed Voltage Regulators

1 Features

- Output Current up to 1.5 A
- Available in Fixed 5-V, 12-V, and 15-V Options
- Output Voltage Tolerances of ±2% at T_J = 25°C (LM340A)
- Line Regulation of 0.01% / V of at 1-A Load (LM340A)
- Load Regulation of 0.3% / A (LM340A)
- Internal Thermal Overload, Short-Circuit and SOA Protection
- Available in Space-Saving SOT-223 Package
- Output Capacitance Not Required for Stability

2 Applications

- Industrial Power Supplies
- SMPS Post Regulation
- HVAC Systems
- AC Inventors
- Test and Measurement Equipment
- Brushed and Brushless DC Motor Drivers
- Solar Energy String Invertors

Available Packages

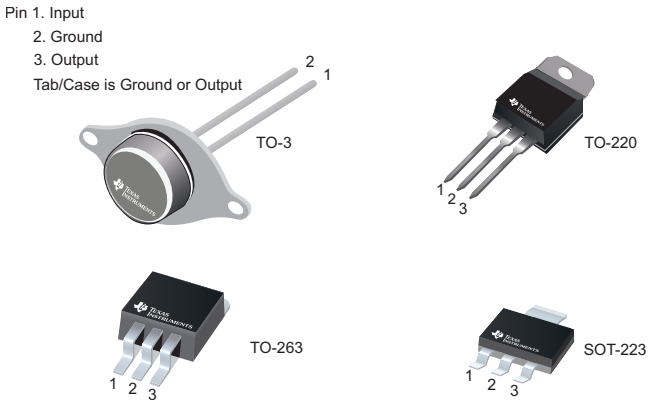

3 Description

The LM340 and LM7805 Family monolithic 3-terminal positive voltage regulators employ internal current-limiting, thermal shutdown and safe-area compensation, making them essentially indestructible. If adequate heat sinking is provided, they can deliver over 1.5-A output current. They are intended as fixed voltage regulators in a wide range of applications including local (on-card) regulation for elimination of noise and distribution problems associated with single-point regulation. In addition to use as fixed voltage regulators, these devices can be used with external components to obtain adjustable output voltages and currents.

Considerable effort was expended to make the entire series of regulators easy to use and minimize the number of external components. It is not necessary to bypass the output, although this does improve transient response. Input bypassing is needed only if the regulator is located far from the filter capacitor of the power supply.

LM7805 is also available in a higher accuracy and better performance version (LM340A). Refer to LM340A specifications in the *LM340A Electrical Characterisitcs* table.

Device Information(1)

PART NUMBER	PACKAGE	BODY SIZE (NOM)
LM340x LM7805 Family	DDPAK/TO-263 (3)	10.18 mm × 8.41 mm
	SOT-223 (4)	6.50 mm × 3.50 mm
	TO-220 (3)	14.986 mm × 10.16 mm
	TO-3 (2)	38.94 mm x 25.40 mm

(1) For all available packages, see the orderable addendum at the end of the data sheet.

Fixed Output Voltage Regulator

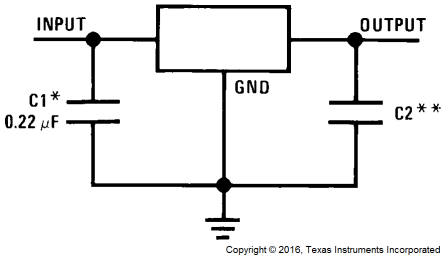

*Required if the regulator is located far from the power supply filter.
**Although no output capacitor is needed for stability, it does help transient response. (If needed, use 0.1-μF, ceramic disc).

An IMPORTANT NOTICE at the end of this data sheet addresses availability, warranty, changes, use in safety-critical applications, intellectual property matters and other important disclaimers. PRODUCTION DATA.

Table of Contents

1 **Features** ... 1
2 **Applications** ... 1
3 **Description** ... 1
4 **Revision History** ... 2
5 **Pin Configuration and Functions** ... 3
6 **Specifications** ... 4
6.1 Absolute Maximum Ratings ... 4
6.2 ESD Ratings ... 4
6.3 Recommended Operating Conditions ... 4
6.4 Thermal Information ... 4
6.5 LM340A Electrical Characteristics, V_O = 5 V, V_I = 10 V ... 5
6.6 LM340 / LM7805 Electrical Characteristics, V_O = 5 V, V_I = 10 V ... 6
6.7 LM340 / LM7812 Electrical Characteristics, V_O = 12 V, V_I = 19 V ... 7
6.8 LM340 / LM7815 Electrical Characteristics, V_O = 15 V, V_I = 23 V ... 8
6.9 Typical Characteristics ... 9
7 **Detailed Description** ... 12
7.1 Overview ... 12
7.2 Functional Block Diagram ... 12
7.3 Feature Description ... 12
7.4 Device Functional Modes ... 12
8 **Application and Implementation** ... 13
8.1 Application Information ... 13
8.2 Typical Applications ... 14
8.3 System Examples ... 15
9 **Power Supply Recommendations** ... 17
10 **Layout** ... 17
10.1 Layout Guidelines ... 17
10.2 Layout Example ... 17
10.3 Heat Sinking DDPAK/TO-263 and SOT-223 Package Parts ... 18
11 **Device and Documentation Support** ... 20
11.1 Documentation Support ... 20
11.2 Related Links ... 20
11.3 Receiving Notification of Documentation Updates 20
11.4 Community Resources ... 20
11.5 Trademarks ... 20
11.6 Electrostatic Discharge Caution ... 20
11.7 Glossary ... 20
12 **Mechanical, Packaging, and Orderable Information** ... 21

4 Revision History

NOTE: Page numbers for previous revisions may differ from page numbers in the current version.

Changes from Revision K (November 2015) to Revision L	Page
• Changed pinout number order for the TO-220 and SOT-223 packages from: 2, 3, 1 to: 1, 2, 3	1

Changes from Revision J (December 2013) to Revision K	Page
• Added *ESD Ratings* table, *Thermal Information* table, *Feature Description* section, *Device Functional Modes*, *Application and Implementation* section, *Power Supply Recommendations* section, *Layout* section, *Device and Documentation Support* section, and *Mechanical, Packaging, and Orderable Information* section	1
• Deleted obsolete LM140 and LM7808C devices from the data sheet	1
• Changed Figure 13 caption from *Line Regulation 140AK-5.0* to *Line Regulation LM340,*	11
• Changed Figure 14 caption from *Line Regulation 140AK-5.0* to *Line Regulation LM340,*	11

Changes from Revision I (March 2013) to Revision J	Page
• Changed 0.5 from typ to max	5

Copyright © 2000–2016, Texas Instruments Incorporated

5 Pin Configuration and Functions

LM7805 and LM7812 KTT Package
3-Pin DDPAK/TO-263
Top View

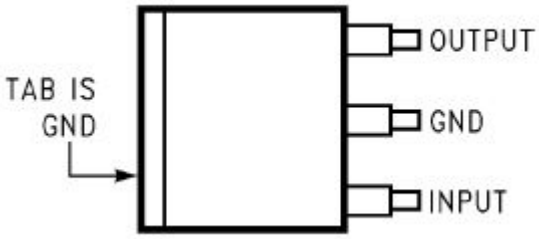

LM7805 DCY Package
4-Pin SOT-223
Side View

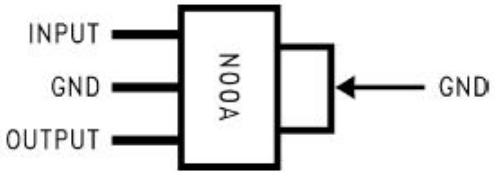

LM7805, LM7812, and LM7815 NDE Package
3-Pin TO-220
Top View

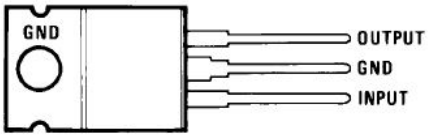

LM340K-5.0 NDS Package
2-Pin TO-3
Top View

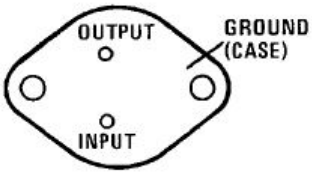

Pin Functions

PIN		I/O	DESCRIPTION
NAME	NO.		
INPUT	1	I	Input voltage pin
GND	2	I/O	Ground pin
OUTPUT	3	O	Output voltage pin

6 Specifications

6.1 Absolute Maximum Ratings

over operating free-air temperature range (unless otherwise noted)[1][2]

		MIN	MAX	UNIT
DC input voltage			35	V
Internal power dissipation[3]		Internally Limited		
Maximum junction temperature			150	°C
Lead temperature (soldering, 10 sec.)	TO-3 package (NDS)		300	°C
	Lead temperature 1,6 mm (1/16 in) from case for 10 s		230	°C
Storage temperature		−65	150	°C

(1) Stresses beyond those listed under *Absolute Maximum Ratings* may cause permanent damage to the device. These are stress ratings only, which do not imply functional operation of the device at these or any other conditions beyond those indicated under *Recommended Operating Conditions*. Exposure to absolute-maximum-rated conditions for extended periods may affect device reliability.
(2) If Military/Aerospace specified devices are required, please contact the Texas Instruments Sales Office/Distributors for availability and specifications.
(3) The maximum allowable power dissipation at any ambient temperature is a function of the maximum junction temperature for operation (T_{JMAX} = 125°C or 150°C), the junction-to-ambient thermal resistance (θ_{JA}), and the ambient temperature (T_A). $P_{DMAX} = (T_{JMAX} - T_A)/\theta_{JA}$. If this dissipation is exceeded, the die temperature rises above T_{JMAX} and the electrical specifications do not apply. If the die temperature rises above 150°C, the device goes into thermal shutdown. For the TO-3 package (NDS), the junction-to-ambient thermal resistance (θ_{JA}) is 39°C/W. When using a heat sink, θ_{JA} is the sum of the 4°C/W junction-to-case thermal resistance (θ_{JC}) of the TO-3 package and the case-to-ambient thermal resistance of the heat sink. For the TO-220 package (NDE), θ_{JA} is 54°C/W and θ_{JC} is 4°C/W. If SOT-223 is used, the junction-to-ambient thermal resistance is 174°C/W and can be reduced by a heat sink (see Applications Hints on heat sinking).If the DDPAK\TO-263 package is used, the thermal resistance can be reduced by increasing the PCB copper area thermally connected to the package: Using 0.5 square inches of copper area, θ_{JA} is 50°C/W; with 1 square inch of copper area, θ_{JA} is 37°C/W; and with 1.6 or more inches of copper area, θ_{JA} is 32°C/W.

6.2 ESD Ratings

			VALUE	UNIT
$V_{(ESD)}$	Electrostatic discharge	Human-body model (HBM)[1]	±2000	V

(1) ESD rating is based on the human-body model, 100 pF discharged through 1.5 kΩ.

6.3 Recommended Operating Conditions

over operating free-air temperature range (unless otherwise noted)

		MIN	MAX	UNIT
Temperature (T_A)	LM340A, LM340	0	125	°C

6.4 Thermal Information

THERMAL METRIC[1]		LM340, LM7805 Family				UNIT
		NDE (TO-220)	KTT (DDPAK/TO-263)	DCY (SOT-223)	NDS (TO-3)	
		3 PINS	3 PINS	4 PINS	2 PINS	
$R_{\theta JA}$	Junction-to-ambient thermal resistance	23.9	44.8	62.1	39	°C/W
$R_{\theta JC(top)}$	Junction-to-case (top) thermal resistance	16.7	45.6	44	2	°C/W
$R_{\theta JB}$	Junction-to-board thermal resistance	5.3	24.4	10.7	—	°C/W
ψ_{JT}	Junction-to-top characterization parameter	3.2	11.2	2.7	—	°C/W
ψ_{JB}	Junction-to-board characterization parameter	5.3	23.4	10.6	—	°C/W
$R_{\theta JC(bot)}$	Junction-to-case (bottom) thermal resistance	1.7	1.5	—	—	°C/W

(1) For more information about traditional and new thermal metrics, see the *Semiconductor and IC Package Thermal Metrics* application report.

Copyright © 2000–2016, Texas Instruments Incorporated

6.5 LM340A Electrical Characteristics, V_O = 5 V, V_I = 10 V

I_{OUT} = 1 A, 0°C ≤ T_J ≤ 125°C (LM340A) unless otherwise specified(1)

PARAMETER		TEST CONDITIONS		MIN	TYP	MAX	UNIT
V_O	Output voltage	T_J = 25°C		4.9	5	5.1	V
		P_D ≤ 15 W, 5 mA ≤ I_O ≤ 1 A 7.5 V ≤ V_{IN} ≤ 20 V		4.8		5.2	V
ΔV_O	Line regulation	7.5 V ≤ V_{IN} ≤ 20 V	T_J = 25°C		3	10	mV
			Over temperature, I_O = 500 mA			10	mV
		8 V ≤ V_{IN} ≤ 12 V	T_J = 25°C			4	mV
			Over temperature			12	mV
ΔV_O	Load regulation	T_J = 25°C	5 mA ≤ I_O ≤ 1.5 A		10	25	mV
			250 mA ≤ I_O ≤ 750 mA			15	mV
		Over temperature, 5 mA ≤ I_O ≤ 1 A				25	mV
I_Q	Quiescent current	T_J = 25°C				6	mA
		Over temperature				6.5	mA
ΔI_Q	Quiescent current change	T_J = 25°C, I_O = 1 A 7.5 V ≤ V_{IN} ≤ 20 V				0.8	mA
		Over temperature, 5 mA ≤ I_O ≤ 1 A				0.5	mA
		Over temperature, I_O = 500 mA 8 V ≤ V_{IN} ≤ 25 V				0.8	mA
V_N	Output noise voltage	T_A = 25°C, 10 Hz ≤ f ≤ 100 kHz			40		μV
$\frac{\Delta V_{IN}}{\Delta V_{OUT}}$	Ripple rejection	f = 120 Hz 8 V ≤ V_{IN} ≤ 18 V	T_J = 25°C, , I_O = 1 A	68	80		dB
			Over temperature, I_O = 500 mA	68			dB
R_O	Dropout voltage	T_J = 25°C, I_O = 1 A			2		V
	Output resistance	f = 1 kHz			8		mΩ
	Short-circuit current	T_J = 25°C			2.1		A
	Peak output current	T_J = 25°C			2.4		A
	Average TC of V_O	Min, T_J = 0°C, I_O = 5 mA			−0.6		mV/°C
V_{IN}	Input voltage required to maintain line regulation	T_J = 25°C		7.5			V

(1) All characteristics are measured with a 0.22-μF capacitor from input to ground and a 0.1-μF capacitor from output to ground. All characteristics except noise voltage and ripple rejection ratio are measured using pulse techniques (t_w ≤ 10 ms, duty cycle ≤ 5%). Output voltage changes due to changes in internal temperature must be taken into account separately.

6.6 LM340 / LM7805 Electrical Characteristics, V_O = 5 V, V_I = 10 V

0°C ≤ T_J ≤ 125°C unless otherwise specified(1)

PARAMETER		TEST CONDITIONS		MIN	TYP	MAX	UNIT
V_O	Output voltage	T_J = 25°C, 5 mA ≤ I_O ≤ 1 A		4.8	5	5.2	V
		P_D ≤ 15 W, 5 mA ≤ I_O ≤ 1 A 7.5 V ≤ V_{IN} ≤ 20 V		4.75		5.25	V
ΔV_O	Line regulation	I_O = 500 mA	T_J = 25°C 7V ≤ V_{IN} ≤ 25V		3	50	mV
			Over temperature 8V ≤ V_{IN} ≤ 20V			50	mV
		I_O ≤ 1 A	T_J = 25°C 7.5V ≤ V_{IN} ≤ 20V			50	mV
			Over temperature 8V ≤ V_{IN} ≤ 12V			25	mV
ΔV_O	Load regulation	T_J = 25°C	5 mA ≤ I_O ≤ 1.5 A		10	50	mV
			250 mA ≤ I_O ≤ 750 mA			25	mV
		Over temperature, 5 mA ≤ I_O ≤ 1 A				50	mV
I_Q	Quiescent current	I_O ≤ 1 A	T_J = 25°C			8	mA
			Over temperature			8.5	mA
ΔI_Q	Quiescent current change	0°C ≤ T_J ≤ 125°C, 5 mA ≤ I_O ≤ 1 A			0.5		mA
		7 V ≤ V_{IN} ≤ 20 V	T_J = 25°C, I_O ≤ 1 A			1	mA
			Over temperature, I_O ≤ 500 mA			1	mA
V_N	Output noise voltage	T_A = 25°C, 10 Hz ≤ f ≤ 100 kHz			40		µV
$\frac{\Delta V_{IN}}{\Delta V_{OUT}}$	Ripple rejection	f = 120 Hz 8 V ≤ V_{IN} ≤ 18 V	T_J = 25°C, I_O ≤ 1 A	62	80		dB
			Over temperature, I_O ≤ 500 mA	62			dB
R_O	Dropout voltage	T_J = 25°C, I_O = 1 A			2		V
	Output resistance	f = 1 kHz			8		mΩ
	Short-circuit current	T_J = 25°C			2.1		A
	Peak output current	T_J = 25°C			2.4		A
	Average TC of V_{OUT}	Over temperature, I_O = 5 mA			−0.6		mV/°C
V_{IN}	Input voltage required to maintain line regulation	T_J = 25°C, I_O ≤ 1 A		7.5			V

(1) All characteristics are measured with a 0.22-µF capacitor from input to ground and a 0.1-µF capacitor from output to ground. All characteristics except noise voltage and ripple rejection ratio are measured using pulse techniques (t_w ≤ 10 ms, duty cycle ≤ 5%). Output voltage changes due to changes in internal temperature must be taken into account separately.

Copyright © 2000–2016, Texas Instruments Incorporated

6.7 LM340 / LM7812 Electrical Characteristics, V_O = 12 V, V_I = 19 V

0°C ≤ T_J ≤ 125°C unless otherwise specified(1)

PARAMETER		TEST CONDITIONS		MIN	TYP	MAX	UNIT
V_O	Output voltage	T_J = 25°C, 5 mA ≤ I_O ≤ 1 A		11.5	12	12.5	V
		P_D ≤ 15 W, 5 mA ≤ I_O ≤ 1 A 14.5 V ≤ V_{IN} ≤ 27 V		11.4		12.6	V
ΔV_O	Line regulation	I_O = 500 mA	T_J = 25°C 14.5V ≤ V_{IN} ≤ 30V		4	120	mV
			Over temperature 15V ≤ V_{IN} ≤ 27V			120	mV
		I_O ≤ 1 A	T_J = 25°C 14.6V ≤ V_{IN} ≤ 27V			120	mV
			Over temperature 16V ≤ V_{IN} ≤ 22V			60	mV
ΔV_O	Load regulation	T_J = 25°C	5 mA ≤ I_O ≤ 1.5 A		12	120	mV
			250 mA ≤ I_O ≤ 750 mA			60	mV
		Over temperature, 5 mA ≤ I_O ≤ 1 A				120	mV
I_Q	Quiescent current	I_O ≤ 1 A	T_J = 25°C			8	mA
			Over temperature			8.5	mA
ΔI_Q	Quiescent current change	5 mA ≤ I_O ≤ 1 A			0.5		mA
		T_J = 25°C, I_O ≤ 1 A 14.8 V ≤ V_{IN} ≤ 27 V				1	mA
		Over temperature, I_O ≤ 500 mA 14.5 V ≤ V_{IN} ≤ 30 V				1	mA
V_N	Output noise voltage	T_A = 25°C, 10 Hz ≤ f ≤ 100 kHz			75		µV
$\frac{\Delta V_{IN}}{\Delta V_{OUT}}$	Ripple rejection	f = 120 Hz	T_J = 25°C, I_O ≤ 1 A	55	72		dB
		15 V ≤ V_{IN} ≤ 25 V	Over temperature, I_O ≤ 500 mA,	55			dB
R_O	Dropout voltage	T_J = 25°C, I_O = 1 A			2		V
	Output resistance	f = 1 kHz			18		mΩ
	Short-circuit current	T_J = 25°C			1.5		A
	Peak output current	T_J = 25°C			2.4		A
	Average TC of V_{OUT}	Over temperature, I_O = 5 mA			−1.5		mV/°C
V_{IN}	Input voltage required to maintain line regulation	T_J = 25°C, I_O ≤ 1 A		14.6			V

(1) All characteristics are measured with a 0.22-µF capacitor from input to ground and a 0.1-µF capacitor from output to ground. All characteristics except noise voltage and ripple rejection ratio are measured using pulse techniques (t_w ≤ 10 ms, duty cycle ≤ 5%). Output voltage changes due to changes in internal temperature must be taken into account separately.

6.8 LM340 / LM7815 Electrical Characteristics, V_O = 15 V, V_I = 23 V

0°C ≤ T_J ≤ 125°C unless otherwise specified(1)

PARAMETER		TEST CONDITIONS		MIN	TYP	MAX	UNIT
V_O	Output voltage	T_J = 25°C, 5 mA ≤ I_O ≤ 1 A		14.4	15	15.6	V
		P_D ≤ 15 W, 5 mA ≤ I_O ≤ 1 A 17.5 V ≤ V_{IN} ≤ 30 V		14.25		15.75	V
ΔV_O	Line regulation	I_O = 500 mA	T_J = 25°C 17.5 V ≤ V_{IN} ≤ 30 V		4	150	mV
			Over temperature 18.5 V ≤ V_{IN} ≤ 30 V			150	mV
		I_O ≤ 1 A	T_J = 25°C 17.7 V ≤ V_{IN} ≤ 30 V			150	mV
			Over temperature 20 V ≤ V_{IN} ≤ 26 V			75	mV
ΔV_O	Load regulation	T_J = 25°C	5 mA ≤ I_O ≤ 1.5 A		12	150	mV
			250 mA ≤ I_O ≤ 750 mA			75	mV
		Over temperature, 5 mA ≤ I_O ≤ 1 A,				150	mV
I_Q	Quiescent current	I_O ≤ 1 A	T_J = 25°C			8	mA
			Over temperature			8.5	mA
ΔI_Q	Quiescent current change	5 mA ≤ I_O ≤ 1 A			0.5		mA
		T_J = 25°C, I_O ≤ 1 A 17.9 V ≤ V_{IN} ≤ 30 V				1	mA
		Over temperature, I_O ≤ 500 mA 17.5 V ≤ V_{IN} ≤ 30 V				1	mA
V_N	Output noise voltage	T_A = 25°C, 10 Hz ≤ f ≤ 100 kHz			90		µV
$\frac{\Delta V_{IN}}{\Delta V_{OUT}}$	Ripple rejection	f = 120 Hz	T_J = 25°C, I_O ≤ 1 A	54	70		dB
		18.5 V ≤ V_{IN} ≤ 28.5 V	Over temperature, I_O ≤ 500 mA,	54			dB
R_O	Dropout voltage	T_J = 25°C, I_O = 1 A			2		V
	Output resistance	f = 1 kHz			19		mΩ
	Short-circuit current	T_J = 25°C			1.2		A
	Peak output current	T_J = 25°C			2.4		A
	Average TC of V_{OUT}	Over temperature, I_O = 5 mA			−1.8		mV/°C
V_{IN}	Input voltage required to maintain line regulation	T_J = 25°C, I_O ≤ 1 A		17.7			V

(1) All characteristics are measured with a 0.22-µF capacitor from input to ground and a 0.1-µF capacitor from output to ground. All characteristics except noise voltage and ripple rejection ratio are measured using pulse techniques (t_w ≤ 10 ms, duty cycle ≤ 5%). Output voltage changes due to changes in internal temperature must be taken into account separately.

Copyright © 2000–2016, Texas Instruments Incorporated

6.9 Typical Characteristics

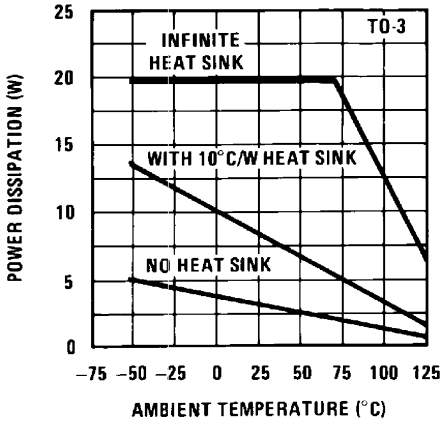

Figure 1. Maximum Average Power Dissipation

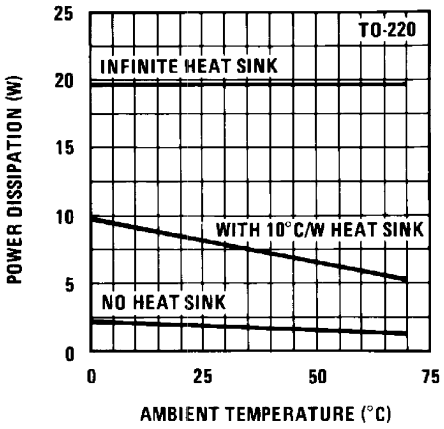

Figure 2. Maximum Average Power Dissipation

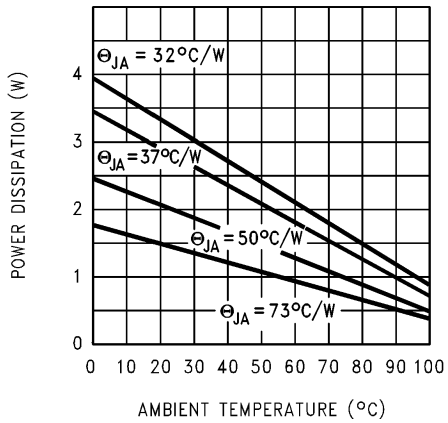

Figure 3. Maximum Power Dissipation (DDPAK/TO-263)

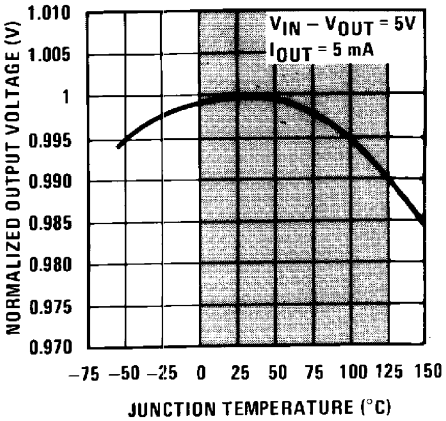

Shaded area refers to LM340A/LM340, LM7805, LM7812 and LM7815.

Figure 4. Output Voltage (Normalized to 1 V at T_J = 25°C)

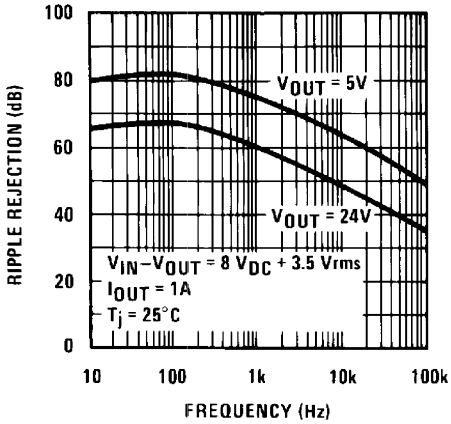

Figure 5. Ripple Rejection

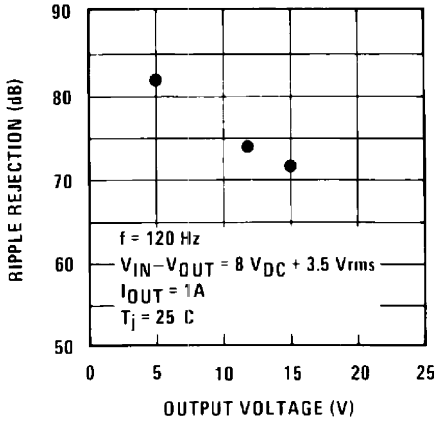

Figure 6. Ripple Rejection

Typical Characteristics (continued)

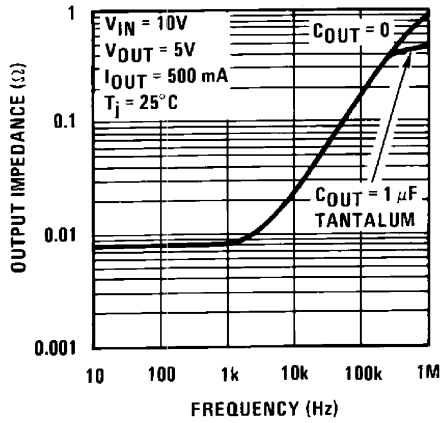

Figure 7. Output Impedance

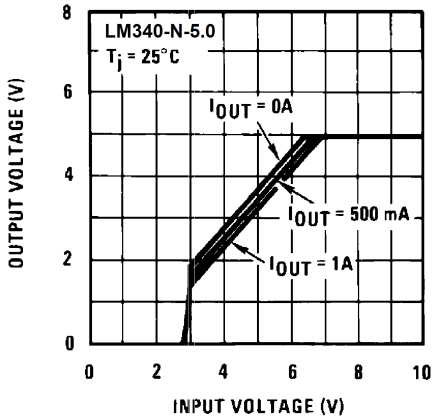

Figure 8. Dropout Characteristics

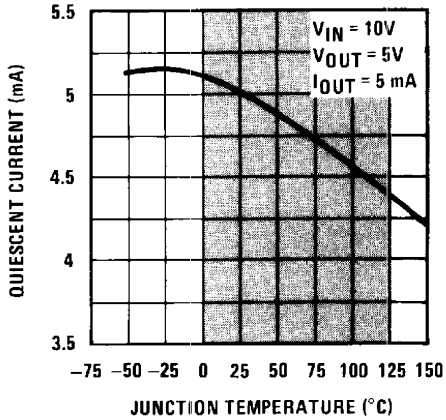

Shaded area refers to LM340A/LM340, LM7805, LM7812, and LM7815.

Figure 9. Quiescent Current

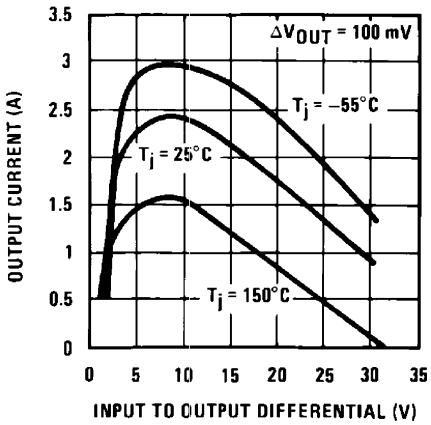

Figure 10. Peak Output Current

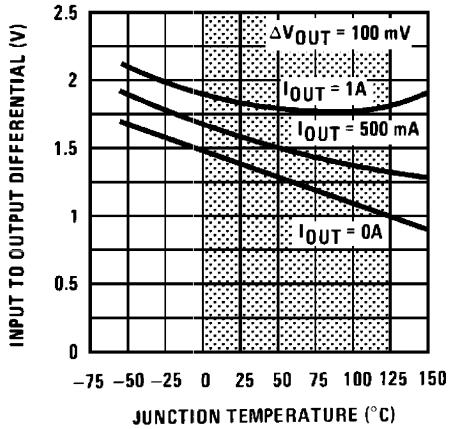

Shaded area refers to LM340A/LM340, LM7805, LM7812, and LM7815.

Figure 11. Dropout Voltage

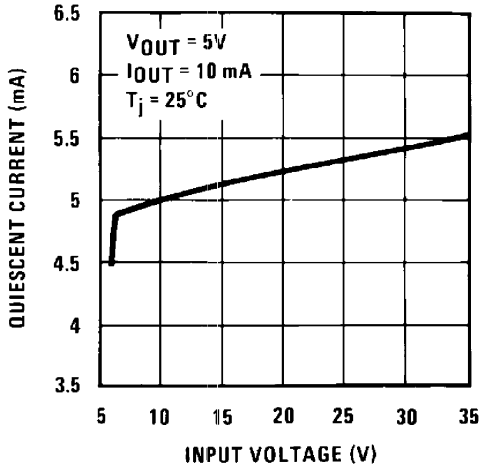

Figure 12. Quiescent Current

Copyright © 2000–2016, Texas Instruments Incorporated

Typical Characteristics (continued)

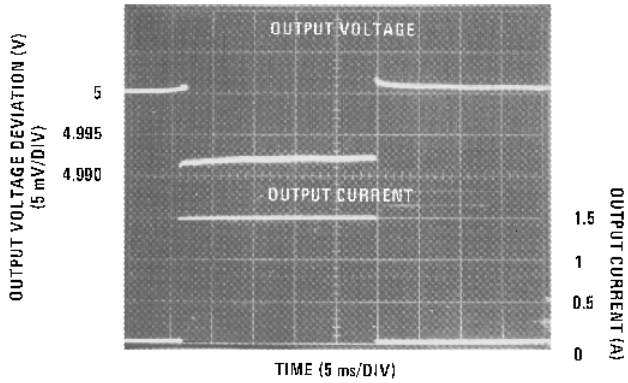

I_{OUT} = 1 A, T_A = 25°C

Figure 13. Line Regulation LM340

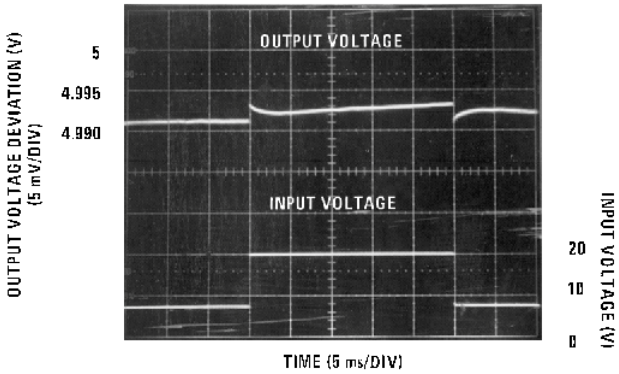

V_{IN} = 10 V, T_A = 25°C

Figure 14. Line Regulation LM340

7 Detailed Description

7.1 Overview

The LM340 and LM7805 devices are a family of fixed output positive voltage regulators with outputs ranging from 3 V to 15 V. They accept up to 35 V of input voltage and with proper heat dissipation can provide over 1.5 A of current. With a combination of current limiting, thermal shutdown, and safe area protection, these regulators eliminate any concern of damage. These features paired with excellent line and load regulation make the LM340 and LM7805 Family versatile solutions to a wide range of power management designs. Although the LM340 and LM7805 Family were designed primarily as fixed-voltage regulators, these devices can be used with external component for adjustable voltage and current.

7.2 Functional Block Diagram

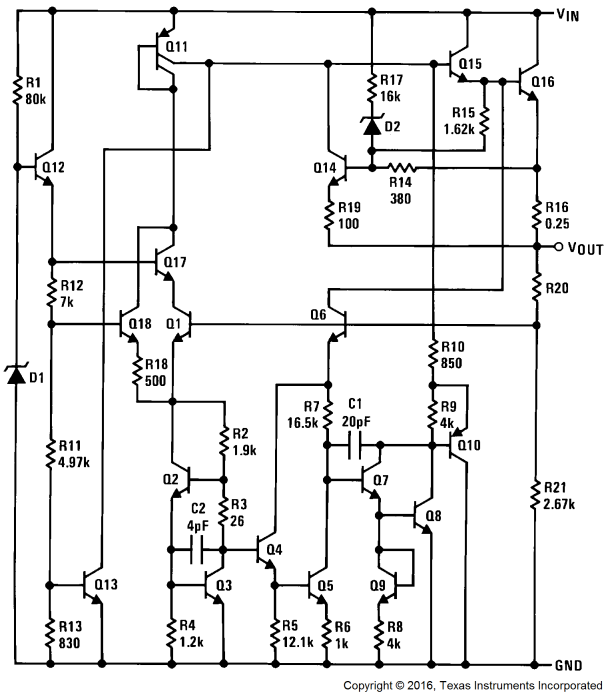

Copyright © 2016, Texas Instruments Incorporated

7.3 Feature Description

7.3.1 Output Current

With proper considerations, the LM340 and LM7805 Family can exceed 1.5-A output current. Depending on the desired package option, the effective junction-to-ambient thermal resistance can be reduced through heat sinking, allowing more power to be dissipated in the device.

7.3.2 Current Limiting Feature

In the event of a short circuit at the output of the regulator, each device has an internal current limit to protect it from damage. The typical current limits for the LM340 and LM7805 Family is 2.4 A.

7.3.3 Thermal Shutdown

Each package type employs internal current limiting and thermal shutdown to provide safe operation area protection. If the junction temperature is allowed to rise to 150°C, the device will go into thermal shutdown.

7.4 Device Functional Modes

There are no functional modes for this device.

Copyright © 2000–2016, Texas Instruments Incorporated

8 Application and Implementation

NOTE

Information in the following applications sections is not part of the TI component specification, and TI does not warrant its accuracy or completeness. TI's customers are responsible for determining suitability of components for their purposes. Customers should validate and test their design implementation to confirm system functionality.

8.1 Application Information

The LM340x and LM7805 series is designed with thermal protection, output short-circuit protection, and output transistor safe area protection. However, as with any IC regulator, it becomes necessary to take precautions to assure that the regulator is not inadvertently damaged. The following describes possible misapplications and methods to prevent damage to the regulator.

8.1.1 Shorting the Regulator Input

When using large capacitors at the output of these regulators, a protection diode connected input to output (Figure 15) may be required if the input is shorted to ground. Without the protection diode, an input short causes the input to rapidly approach ground potential, while the output remains near the initial V_{OUT} because of the stored charge in the large output capacitor. The capacitor will then discharge through a large internal input to output diode and parasitic transistors. If the energy released by the capacitor is large enough, this diode, low current metal, and the regulator are destroyed. The fast diode in Figure 15 shunts most of the capacitors discharge current around the regulator. Generally no protection diode is required for values of output capacitance ≤ 10 μF.

8.1.2 Raising the Output Voltage Above the Input Voltage

Because the output of the device does not sink current, forcing the output high can cause damage to internal low current paths in a manner similar to that just described in *Shorting the Regulator Input*.

8.1.3 Regulator Floating Ground

When the ground pin alone becomes disconnected, the output approaches the unregulated input, causing possible damage to other circuits connected to V_{OUT}. If ground is reconnected with power ON, damage may also occur to the regulator. This fault is most likely to occur when plugging in regulators or modules with on card regulators into powered up sockets. The power must be turned off first, the thermal limit ceases operating, or the ground must be connected first if power must be left on. See Figure 16.

8.1.4 Transient Voltages

If transients exceed the maximum rated input voltage of the device, or reach more than 0.8 V below ground and have sufficient energy, they will damage the regulator. The solution is to use a large input capacitor, a series input breakdown diode, a choke, a transient suppressor or a combination of these.

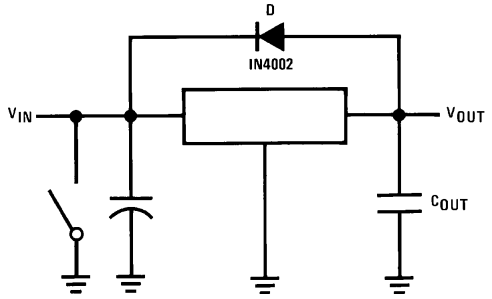

Figure 15. Input Short

Application Information (continued)

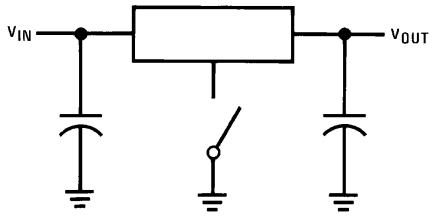

Figure 16. Regulator Floating Ground

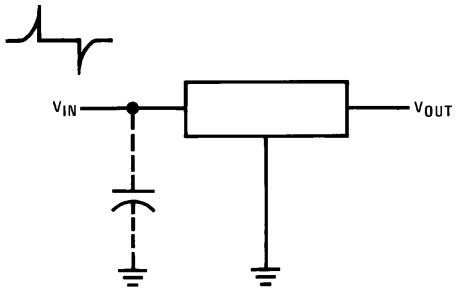

Figure 17. Transients

When a value for $\theta_{(H-A)}$ is found, a heat sink must be selected that has *a value that is less than or equal to this number.*

$\theta_{(H-A)}$ is specified numerically by the heat sink manufacturer in this catalog or shown in a curve that plots temperature rise vs power dissipation for the heat sink.

8.2 Typical Applications

8.2.1 Fixed Output Voltage Regulator

The LM340x and LM7805 Family devices are primarily designed to provide fixed output voltage regulation. The simplest implementation of LM340x and LM7805 Family is shown in Figure 18.

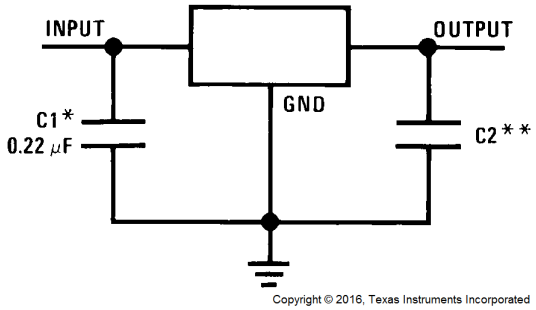

*Required if the regulator is located far from the power supply filter.
**Although no output capacitor is needed for stability, it does help transient response. (If needed, use 0.1-μF, ceramic disc).

Figure 18. Fixed Output Voltage Regulator

8.2.1.1 Design Requirements

The device component count is very minimal. Although not required, TI recommends employing bypass capacitors at the output for optimum stability and transient response. These capacitors must be placed as close as possible to the regulator. If the device is located more than 6 inches from the power supply filter, it is required to employ input capacitor.

Copyright © 2000–2016, Texas Instruments Incorporated

Typical Applications (continued)

8.2.1.2 Detailed Design Procedure

The output voltage is set based on the device variant. LM340x and LM7805 Family are available in 5-V, 12-V and 15-V regulator options.

8.2.1.3 Application Curve

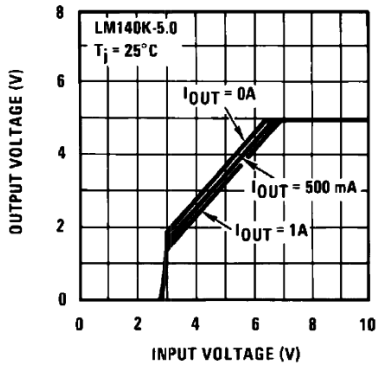

Figure 19. V_{OUT} vs V_{IN}, V_{OUT} = 5 V

8.3 System Examples

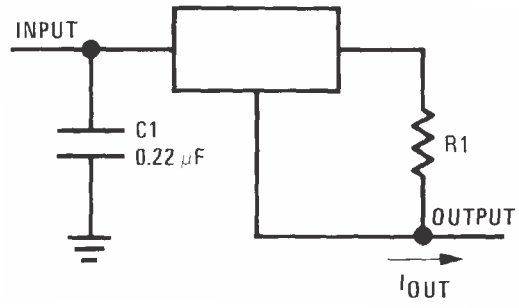

I_{OUT} = V2–3 / R1 + I_Q
ΔI_Q = 1.3 mA over line and load changes.

Figure 20. Current Regulator

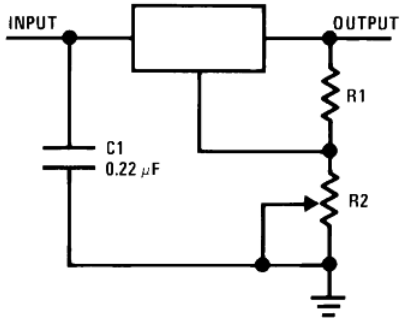

V_{OUT} = 5 V + (5 V/R1 + I_Q) R2 5 V/R1 > 3 I_Q,
load regulation (L_r) ≈ [(R1 + R2)/R1] (L_r of LM340-5).

Figure 21. Adjustable Output Regulator

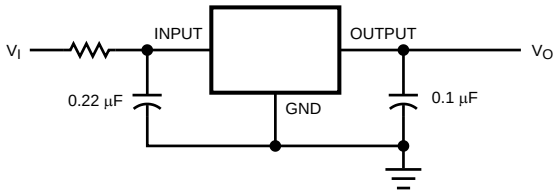

Figure 22. High Input Voltage Circuit With Series Resistor

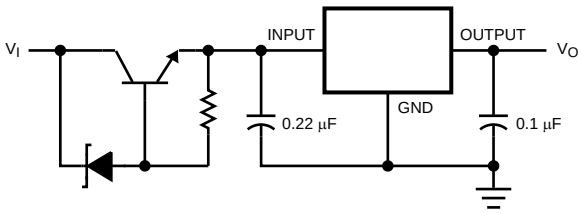

Figure 23. High Input Voltage Circuit implementation With Transistor

System Examples (continued)

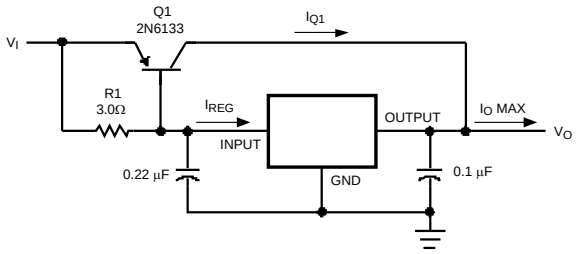

$\beta(Q1) \geq I_{O\ Max} / I_{REG\ Max}$
$R1 = 0.9 / I_{REG} = \beta_{(Q1)} V_{BE(Q1)} / I_{REG\ Max\ (\beta\ +1)} - I_{O\ Max}$

Figure 24. High Current Voltage Regulator

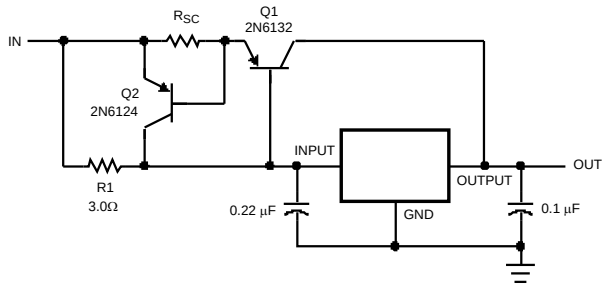

$R_{SC} = 0.8 / I_{SC}$
$R1 = \beta V_{BE(Q1)} / I_{REG\ Max}\ (\beta\ +1) - I_{O\ Max}$

Figure 25. High Output Current With Short-Circuit Protection

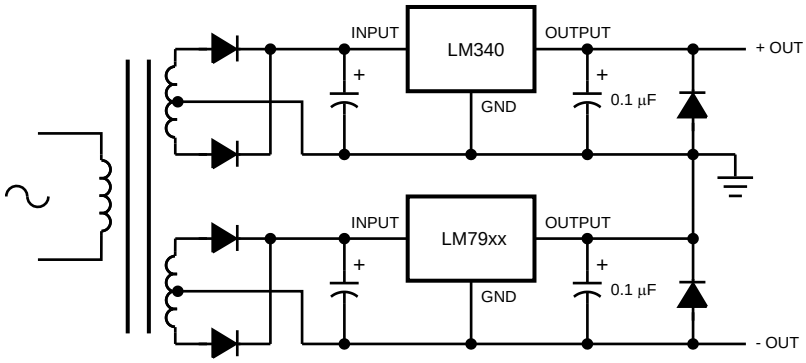

Figure 26. LM340 Used With Negative Regulator LM79xx

Copyright © 2000–2016, Texas Instruments Incorporated

9 Power Supply Recommendations

The LM340 is designed to operate from a wide input voltage up to 35 V. Please refer to electrical characteristics tables for the minimum input voltage required for line/load regulation. If the device is more than six inches from the input filter capacitors, an input bypass capacitor, 0.1 μF or greater, of any type is needed for stability.

10 Layout

10.1 Layout Guidelines

Some layout guidelines must be followed to ensure proper regulation of the output voltage with minimum noise. Traces carrying the load current must be wide to reduce the amount of parasitic trace inductance. To improve PSRR, a bypass capacitor can be placed at the OUTPUT pin and must be placed as close as possible to the IC. All that is required for the typical fixed output regulator application circuit is the LM340x/LM7805 Family IC and a 0.22-μF input capacitor if the regulator is placed far from the power supply filter. A 0.1-μF output capacitor is recommended to help with transient response. In cases when VIN shorts to ground, an external diode must be placed from VOUT to VIN to divert the surge current from the output capacitor and protect the IC.

10.2 Layout Example

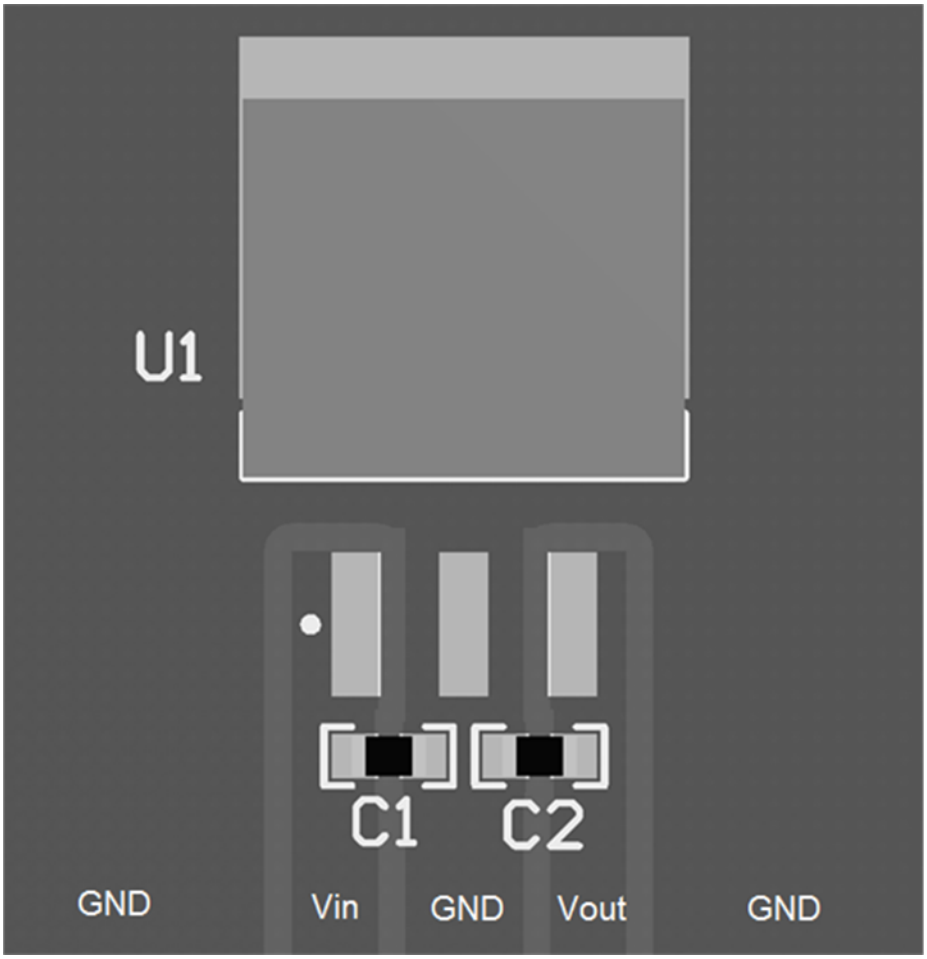

Figure 27. Layout Example DDPAK

Layout Example (continued)

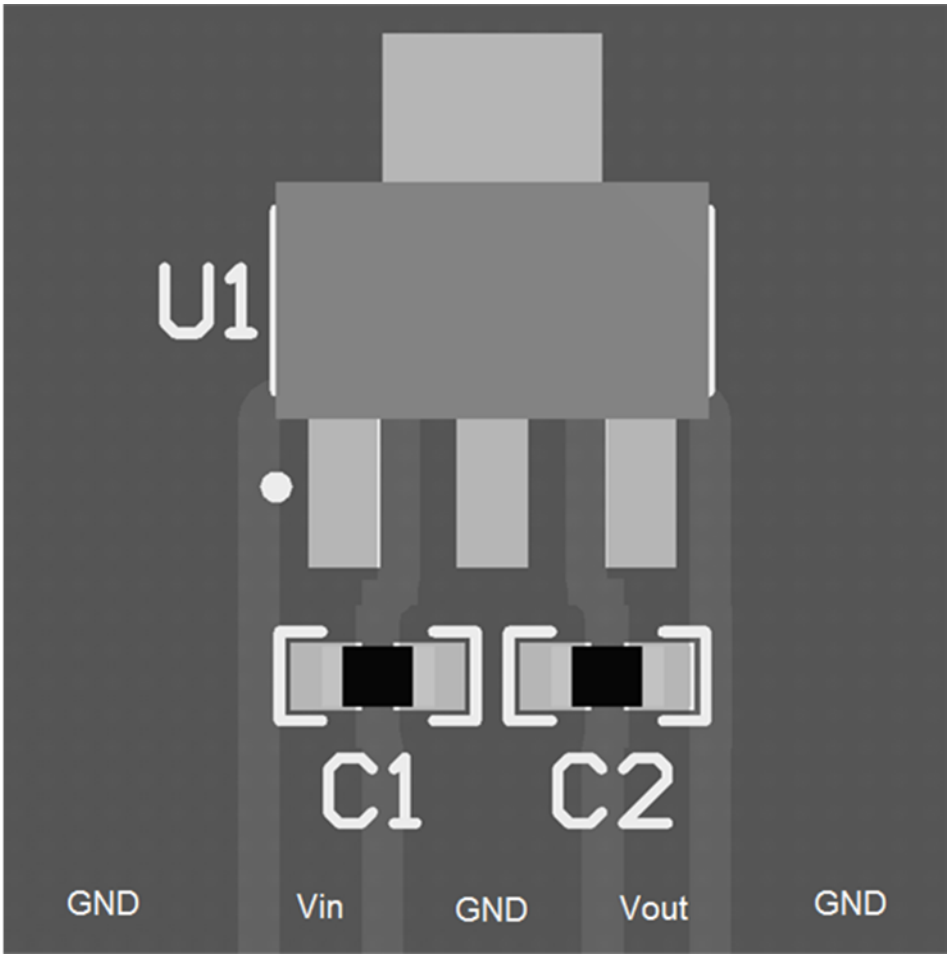

Figure 28. Layout Example SOT-223

10.3 Heat Sinking DDPAK/TO-263 and SOT-223 Package Parts

Both the DDPAK/TO-263 (KTT) and SOT-223 (DCY) packages use a copper plane on the PCB and the PCB itself as a heat sink. To optimize the heat sinking ability of the plane and PCB, solder the tab of the plane.

Figure 29 shows for the DDPAK/TO-263 the measured values of $\theta_{(J-A)}$ for different copper area sizes using a typical PCB with 1-oz copper *and no solder mask over the copper area used for heat sinking*.

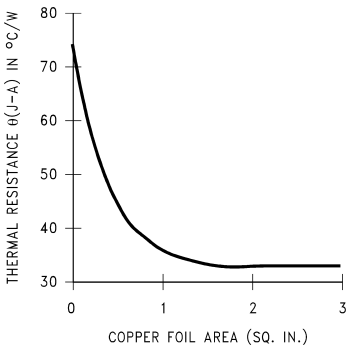

Figure 29. $\theta_{(J-A)}$ vs Copper (1 Ounce) Area for the DDPAK/TO-263 Package

Copyright © 2000–2016, Texas Instruments Incorporated

Heat Sinking DDPAK/TO-263 and SOT-223 Package Parts (continued)

As shown in Figure 29, increasing the copper area beyond 1 square inch produces very little improvement. It should also be observed that the minimum value of $\theta_{(J-A)}$ for the DDPAK/TO-263 package mounted to a PCB is 32°C/W.

As a design aid, Figure 30 shows the maximum allowable power dissipation compared to ambient temperature for the DDPAK/TO-263 device (assuming $\theta_{(J-A)}$ is 35°C/W and the maximum junction temperature is 125°C).

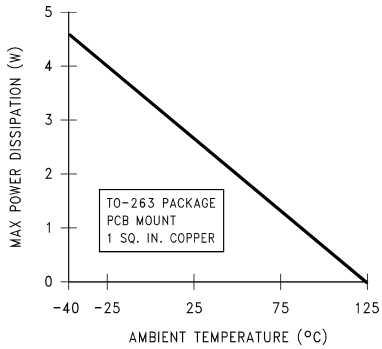

Figure 30. Maximum Power Dissipation vs T_{AMB} for the DDPAK/TO-263 Package

Figure 31 and Figure 32 show the information for the SOT-223 package. Figure 31 assumes a $\theta_{(J-A)}$ of 74°C/W for 1-oz. copper and 51°C/W for 2-oz. copper and a maximum junction temperature of 125°C.

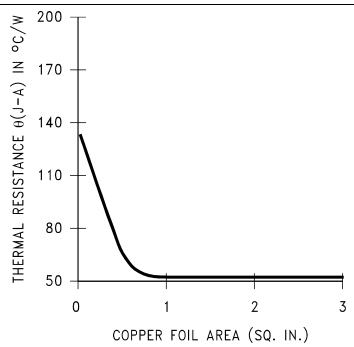

Figure 31. $\theta_{(J-A)}$ vs Copper (2 Ounce) Area for the SOT-223 Package

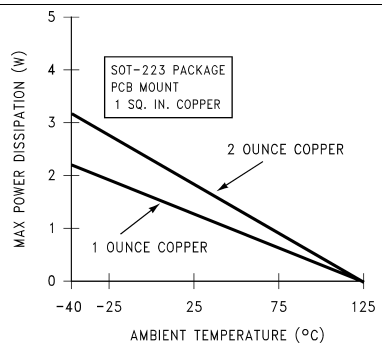

Figure 32. Maximum Power Dissipation vs T_{AMB} for the SOT-223 Package

See *AN-1028 LMX2370 PLLatinum Dual Freq Synth for RF Pers Comm LMX2370 2.5GHz/1.2GHz* (SNVA036) for power enhancement techniques to be used with the SOT-223 package.

11 Device and Documentation Support

11.1 Documentation Support

11.1.1 Related Documentation

For related documentation, see the following:

- *AN-1028 LMX2370 PLLatinum Dual Freq Synth for RF Pers Comm LMX2370 2.5GHz/1.2GHz* (SNVA036)
- *LM140K Series 3-Terminal Positive Regulators* (SNVS994)

11.2 Related Links

The table below lists quick access links. Categories include technical documents, support and community resources, tools and software, and quick access to sample or buy.

Table 1. Related Links

PARTS	PRODUCT FOLDER	SAMPLE & BUY	TECHNICAL DOCUMENTS	TOOLS & SOFTWARE	SUPPORT & COMMUNITY
LM340	Click here	Click here	Click here	Click here	Click here
LM340A	Click here	Click here	Click here	Click here	Click here
LM7805	Click here	Click here	Click here	Click here	Click here
LM7812	Click here	Click here	Click here	Click here	Click here
LM7815	Click here	Click here	Click here	Click here	Click here

11.3 Receiving Notification of Documentation Updates

To receive notification of documentation updates, navigate to the device product folder on ti.com. In the upper right corner, click on *Alert me* to register and receive a weekly digest of any product information that has changed. For change details, review the revision history included in any revised document.

11.4 Community Resources

The following links connect to TI community resources. Linked contents are provided "AS IS" by the respective contributors. They do not constitute TI specifications and do not necessarily reflect TI's views; see TI's Terms of Use.

TI E2E™ Online Community ***TI's Engineer-to-Engineer (E2E) Community.*** Created to foster collaboration among engineers. At e2e.ti.com, you can ask questions, share knowledge, explore ideas and help solve problems with fellow engineers.

Design Support ***TI's Design Support*** Quickly find helpful E2E forums along with design support tools and contact information for technical support.

11.5 Trademarks

E2E is a trademark of Texas Instruments.
All other trademarks are the property of their respective owners.

11.6 Electrostatic Discharge Caution

These devices have limited built-in ESD protection. The leads should be shorted together or the device placed in conductive foam during storage or handling to prevent electrostatic damage to the MOS gates.

11.7 Glossary

SLYZ022 — *TI Glossary*.

This glossary lists and explains terms, acronyms, and definitions.

Copyright © 2000–2016, Texas Instruments Incorporated

12 Mechanical, Packaging, and Orderable Information

The following pages include mechanical, packaging, and orderable information. This information is the most current data available for the designated devices. This data is subject to change without notice and revision of this document. For browser-based versions of this data sheet, refer to the left-hand navigation.

PACKAGING INFORMATION

Orderable part number	Status (1)	Material type (2)	Package | Pins	Package qty | Carrier	RoHS (3)	Lead finish/ Ball material (4)	MSL rating/ Peak reflow (5)	Op temp (°C)	Part marking (6)
LM340AT-5.0/NOPB	Active	Production	TO-220 (NDE) | 3	45 | TUBE	ROHS Exempt	SN	Level-1-NA-UNLIM	0 to 125	LM340AT 5.0 P+
LM340AT-5.0/NOPB.B	Active	Production	TO-220 (NDE) | 3	45 | TUBE	ROHS Exempt	SN	Level-1-NA-UNLIM	0 to 125	LM340AT 5.0 P+
LM340MP-5.0/NOPB	Active	Production	SOT-223 (DCY) | 4	1000 | SMALL T&R	Yes	SN	Level-1-260C-UNLIM	0 to 125	N00A
LM340MP-5.0/NOPB.B	Active	Production	SOT-223 (DCY) | 4	1000 | SMALL T&R	Yes	SN	Level-1-260C-UNLIM	0 to 125	N00A
LM340MPX-5.0/NOPB	Active	Production	SOT-223 (DCY) | 4	2000 | LARGE T&R	Yes	SN	Level-1-260C-UNLIM	0 to 125	N00A
LM340MPX-5.0/NOPB.B	Active	Production	SOT-223 (DCY) | 4	2000 | LARGE T&R	Yes	SN	Level-1-260C-UNLIM	0 to 125	N00A
LM340S-12/NOPB	Active	Production	DDPAK/ TO-263 (KTT) | 3	45 | TUBE	ROHS Exempt	SN	Level-3-245C-168 HR	0 to 125	LM340S -12 P+
LM340S-12/NOPB.B	Active	Production	DDPAK/ TO-263 (KTT) | 3	45 | TUBE	ROHS Exempt	SN	Level-3-245C-168 HR	0 to 125	LM340S -12 P+
LM340S-5.0/NOPB	Active	Production	DDPAK/ TO-263 (KTT) | 3	45 | TUBE	ROHS Exempt	SN	Level-3-245C-168 HR	0 to 125	LM340S -5.0 P+
LM340S-5.0/NOPB.B	Active	Production	DDPAK/ TO-263 (KTT) | 3	45 | TUBE	ROHS Exempt	SN	Level-3-245C-168 HR	0 to 125	LM340S -5.0 P+
LM340SX-12/NOPB	Active	Production	DDPAK/ TO-263 (KTT) | 3	500 | LARGE T&R	ROHS Exempt	SN	Level-3-245C-168 HR	0 to 125	LM340S -12 P+
LM340SX-12/NOPB.B	Active	Production	DDPAK/ TO-263 (KTT) | 3	500 | LARGE T&R	ROHS Exempt	SN	Level-3-245C-168 HR	0 to 125	LM340S -12 P+
LM340SX-5.0/NOPB	Active	Production	DDPAK/ TO-263 (KTT) | 3	500 | LARGE T&R	ROHS Exempt	SN	Level-3-245C-168 HR	0 to 125	LM340S -5.0 P+
LM340SX-5.0/NOPB.B	Active	Production	DDPAK/ TO-263 (KTT) | 3	500 | LARGE T&R	ROHS Exempt	SN	Level-3-245C-168 HR	0 to 125	LM340S -5.0 P+
LM340T-12/NOPB	Active	Production	TO-220 (NDE) | 3	45 | TUBE	Yes	SN	Level-1-NA-UNLIM	-	LM340T12 7812 P+
LM340T-12/NOPB.B	Active	Production	TO-220 (NDE) | 3	45 | TUBE	Yes	SN	Level-1-NA-UNLIM	0 to 125	LM340T12 7812 P+
LM340T-15/NOPB	Active	Production	TO-220 (NDE) | 3	45 | TUBE	Yes	SN	Level-1-NA-UNLIM	0 to 125	LM340T15 7815 P+
LM340T-15/NOPB.B	Active	Production	TO-220 (NDE) | 3	45 | TUBE	Yes	SN	Level-1-NA-UNLIM	0 to 125	LM340T15 7815 P+

Orderable part number	Status (1)	Material type (2)	Package | Pins	Package qty | Carrier	RoHS (3)	Lead finish/ Ball material (4)	MSL rating/ Peak reflow (5)	Op temp (°C)	Part marking (6)
LM340T-5.0/LF01	Active	Production	TO-220 (NDG) | 3	45 | TUBE	ROHS Exempt	SN	Level-4-260C-72 HR	0 to 125	LM340T5 7805 P+
LM340T-5.0/LF01.B	Active	Production	TO-220 (NDG) | 3	45 | TUBE	ROHS Exempt	SN	Level-4-260C-72 HR	0 to 125	LM340T5 7805 P+
LM340T-5.0/NOPB	Active	Production	TO-220 (NDE) | 3	45 | TUBE	ROHS Exempt	SN	Level-1-NA-UNLIM	0 to 125	LM340T5 7805 P+
LM340T-5.0/NOPB.B	Active	Production	TO-220 (NDE) | 3	45 | TUBE	ROHS Exempt	SN	Level-1-NA-UNLIM	0 to 125	LM340T5 7805 P+
LM7805CT/NOPB	Active	Production	TO-220 (NDE) | 3	45 | TUBE	ROHS Exempt	SN	Level-1-NA-UNLIM	0 to 125	LM340T5 7805 P+
LM7805CT/NOPB.B	Active	Production	TO-220 (NDE) | 3	45 | TUBE	ROHS Exempt	SN	Level-1-NA-UNLIM	0 to 125	LM340T5 7805 P+
LM7805MP/NOPB	Active	Production	SOT-223 (DCY) | 4	1000 | SMALL T&R	Yes	SN	Level-1-260C-UNLIM	0 to 125	N00A
LM7805MP/NOPB.B	Active	Production	SOT-223 (DCY) | 4	1000 | SMALL T&R	Yes	SN	Level-1-260C-UNLIM	0 to 125	N00A
LM7805MPX/NOPB	Active	Production	SOT-223 (DCY) | 4	2000 | JUMBO T&R	Yes	SN	Level-1-260C-UNLIM	0 to 125	N00A
LM7805MPX/NOPB.B	Active	Production	SOT-223 (DCY) | 4	2000 | JUMBO T&R	Yes	SN	Level-1-260C-UNLIM	0 to 125	N00A
LM7805S/NOPB	Active	Production	DDPAK/ TO-263 (KTT) | 3	45 | TUBE	ROHS Exempt	SN	Level-3-245C-168 HR	0 to 125	LM340S -5.0 P+
LM7805S/NOPB.B	Active	Production	DDPAK/ TO-263 (KTT) | 3	45 | TUBE	ROHS Exempt	SN	Level-3-245C-168 HR	0 to 125	LM340S -5.0 P+
LM7805SX/NOPB	Active	Production	DDPAK/ TO-263 (KTT) | 3	500 | LARGE T&R	ROHS Exempt	SN	Level-3-245C-168 HR	0 to 125	LM340S -5.0 P+
LM7805SX/NOPB.B	Active	Production	DDPAK/ TO-263 (KTT) | 3	500 | LARGE T&R	ROHS Exempt	SN	Level-3-245C-168 HR	0 to 125	LM340S -5.0 P+
LM7812CT/NOPB	Active	Production	TO-220 (NDE) | 3	45 | TUBE	Yes	SN	Level-1-NA-UNLIM	0 to 125	LM340T12 7812 P+
LM7812CT/NOPB.B	Active	Production	TO-220 (NDE) | 3	45 | TUBE	Yes	SN	Level-1-NA-UNLIM	0 to 125	LM340T12 7812 P+
LM7812S/NOPB	Active	Production	DDPAK/ TO-263 (KTT) | 3	45 | TUBE	ROHS Exempt	SN	Level-3-245C-168 HR	0 to 125	LM340S -12 P+
LM7812S/NOPB.B	Active	Production	DDPAK/ TO-263 (KTT) | 3	45 | TUBE	ROHS Exempt	SN	Level-3-245C-168 HR	0 to 125	LM340S -12 P+
LM7812SX/NOPB	Active	Production	DDPAK/ TO-263 (KTT) | 3	500 | LARGE T&R	ROHS Exempt	SN	Level-3-245C-168 HR	0 to 125	LM340S -12 P+

Orderable part number	Status (1)	Material type (2)	Package | Pins	Package qty | Carrier	RoHS (3)	Lead finish/ Ball material (4)	MSL rating/ Peak reflow (5)	Op temp (°C)	Part marking (6)
LM7812SX/NOPB.B	Active	Production	DDPAK/ TO-263 (KTT) | 3	500 | LARGE T&R	ROHS Exempt	SN	Level-3-245C-168 HR	0 to 125	LM340S -12 P+
LM7815CT/NOPB	Active	Production	TO-220 (NDE) | 3	45 | TUBE	Yes	SN	Level-1-NA-UNLIM	0 to 125	LM340T15 7815 P+
LM7815CT/NOPB.B	Active	Production	TO-220 (NDE) | 3	45 | TUBE	Yes	SN	Level-1-NA-UNLIM	0 to 125	LM340T15 7815 P+

(1) **Status:** For more details on status, see our product life cycle.

(2) **Material type:** When designated, preproduction parts are prototypes/experimental devices, and are not yet approved or released for full production. Testing and final process, including without limitation quality assurance, reliability performance testing, and/or process qualification, may not yet be complete, and this item is subject to further changes or possible discontinuation. If available for ordering, purchases will be subject to an additional waiver at checkout, and are intended for early internal evaluation purposes only. These items are sold without warranties of any kind.

(3) **RoHS values:** Yes, No, RoHS Exempt. See the TI RoHS Statement for additional information and value definition.

(4) **Lead finish/Ball material:** Parts may have multiple material finish options. Finish options are separated by a vertical ruled line. Lead finish/Ball material values may wrap to two lines if the finish value exceeds the maximum column width.

(5) **MSL rating/Peak reflow:** The moisture sensitivity level ratings and peak solder (reflow) temperatures. In the event that a part has multiple moisture sensitivity ratings, only the lowest level per JEDEC standards is shown. Refer to the shipping label for the actual reflow temperature that will be used to mount the part to the printed circuit board.

(6) **Part marking:** There may be an additional marking, which relates to the logo, the lot trace code information, or the environmental category of the part.

Multiple part markings will be inside parentheses. Only one part marking contained in parentheses and separated by a "~" will appear on a part. If a line is indented then it is a continuation of the previous line and the two combined represent the entire part marking for that device.

Important Information and Disclaimer: The information provided on this page represents TI's knowledge and belief as of the date that it is provided. TI bases its knowledge and belief on information provided by third parties, and makes no representation or warranty as to the accuracy of such information. Efforts are underway to better integrate information from third parties. TI has taken and continues to take reasonable steps to provide representative and accurate information but may not have conducted destructive testing or chemical analysis on incoming materials and chemicals. TI and TI suppliers consider certain information to be proprietary, and thus CAS numbers and other limited information may not be available for release.

In no event shall TI's liability arising out of such information exceed the total purchase price of the TI part(s) at issue in this document sold by TI to Customer on an annual basis.

TAPE AND REEL INFORMATION

REEL DIMENSIONS

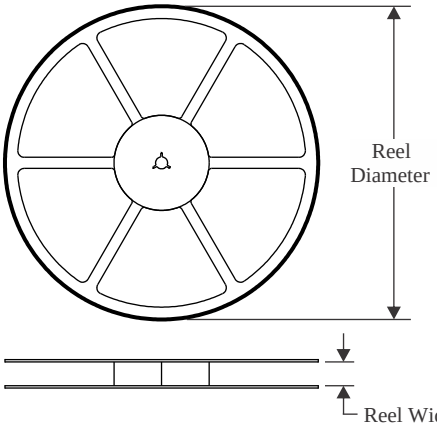

TAPE DIMENSIONS

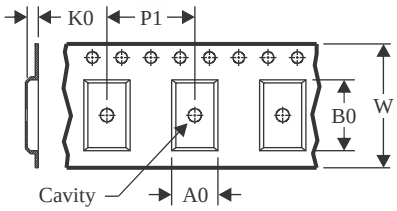

A0	Dimension designed to accommodate the component width
B0	Dimension designed to accommodate the component length
K0	Dimension designed to accommodate the component thickness
W	Overall width of the carrier tape
P1	Pitch between successive cavity centers

QUADRANT ASSIGNMENTS FOR PIN 1 ORIENTATION IN TAPE

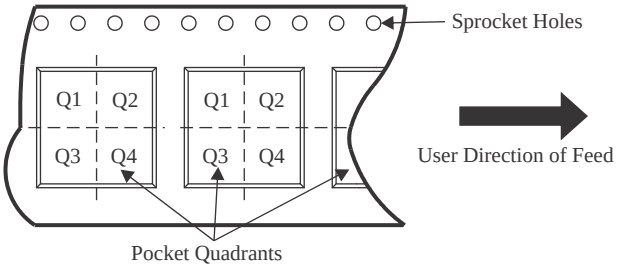

*All dimensions are nominal

Device	Package Type	Package Drawing	Pins	SPQ	Reel Diameter (mm)	Reel Width W1 (mm)	A0 (mm)	B0 (mm)	K0 (mm)	P1 (mm)	W (mm)	Pin1 Quadrant
LM340MP-5.0/NOPB	SOT-223	DCY	4	1000	330.0	16.4	7.0	7.5	2.2	12.0	16.0	Q3
LM340MPX-5.0/NOPB	SOT-223	DCY	4	2000	330.0	16.4	7.0	7.5	2.2	12.0	16.0	Q3
LM340SX-12/NOPB	DDPAK/ TO-263	KTT	3	500	330.0	24.4	10.75	14.85	5.0	16.0	24.0	Q2
LM340SX-5.0/NOPB	DDPAK/ TO-263	KTT	3	500	330.0	24.4	10.75	14.85	5.0	16.0	24.0	Q2
LM7805MP/NOPB	SOT-223	DCY	4	1000	330.0	16.4	7.0	7.5	2.2	12.0	16.0	Q3
LM7805MPX/NOPB	SOT-223	DCY	4	2000	330.0	16.4	7.0	7.5	2.2	12.0	16.0	Q3
LM7805SX/NOPB	DDPAK/ TO-263	KTT	3	500	330.0	24.4	10.75	14.85	5.0	16.0	24.0	Q2
LM7812SX/NOPB	DDPAK/ TO-263	KTT	3	500	330.0	24.4	10.75	14.85	5.0	16.0	24.0	Q2

TAPE AND REEL BOX DIMENSIONS

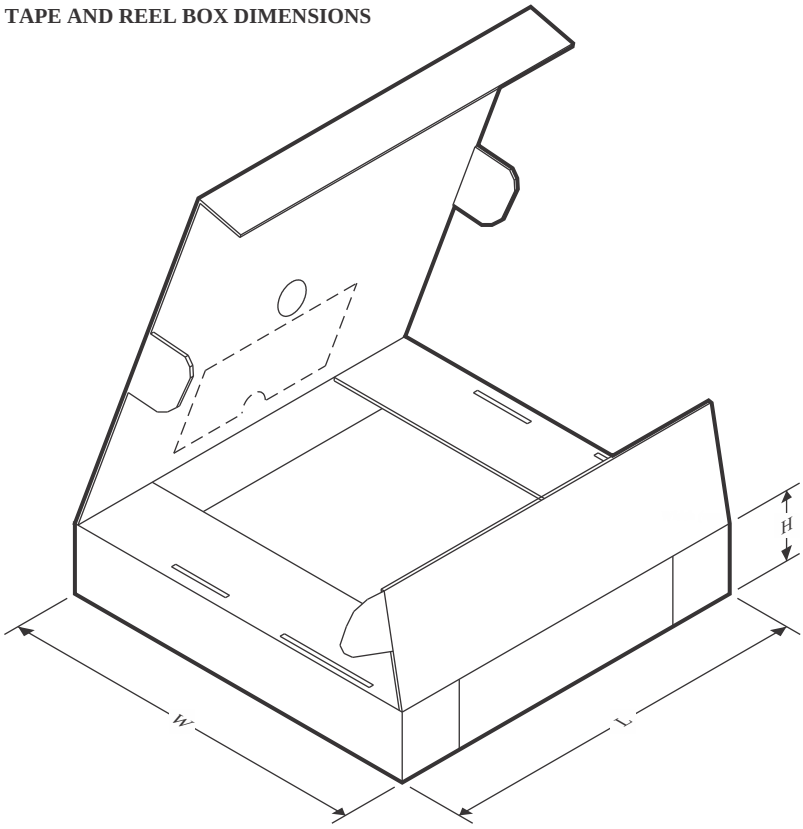

*All dimensions are nominal

Device	Package Type	Package Drawing	Pins	SPQ	Length (mm)	Width (mm)	Height (mm)
LM340MP-5.0/NOPB	SOT-223	DCY	4	1000	367.0	367.0	35.0
LM340MPX-5.0/NOPB	SOT-223	DCY	4	2000	367.0	367.0	35.0
LM340SX-12/NOPB	DDPAK/TO-263	KTT	3	500	356.0	356.0	45.0
LM340SX-5.0/NOPB	DDPAK/TO-263	KTT	3	500	356.0	356.0	45.0
LM7805MP/NOPB	SOT-223	DCY	4	1000	367.0	367.0	35.0
LM7805MPX/NOPB	SOT-223	DCY	4	2000	367.0	367.0	35.0
LM7805SX/NOPB	DDPAK/TO-263	KTT	3	500	356.0	356.0	45.0
LM7812SX/NOPB	DDPAK/TO-263	KTT	3	500	356.0	356.0	45.0

TUBE

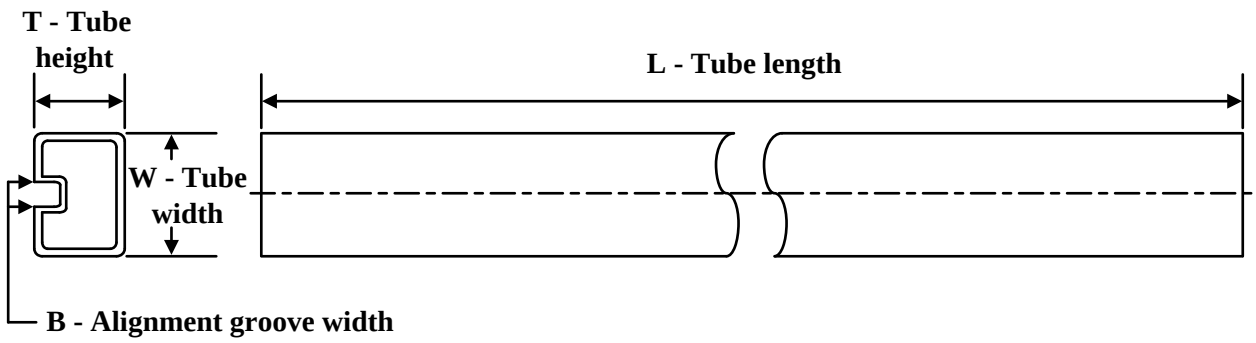

*All dimensions are nominal

Device	Package Name	Package Type	Pins	SPQ	L (mm)	W (mm)	T (µm)	B (mm)
LM340AT-5.0/NOPB	NDE	TO-220	3	45	502	33	6985	4.06
LM340AT-5.0/NOPB.B	NDE	TO-220	3	45	502	33	6985	4.06
LM340S-12/NOPB	KTT	TO-263	3	45	502	25	8204.2	9.19
LM340S-12/NOPB.B	KTT	TO-263	3	45	502	25	8204.2	9.19
LM340S-5.0/NOPB	KTT	TO-263	3	45	502	25	8204.2	9.19
LM340S-5.0/NOPB.B	KTT	TO-263	3	45	502	25	8204.2	9.19
LM340T-12/NOPB	NDE	TO-220	3	45	502	33	6985	4.06
LM340T-12/NOPB.B	NDE	TO-220	3	45	502	33	6985	4.06
LM340T-15/NOPB	NDE	TO-220	3	45	502	33	6985	4.06
LM340T-15/NOPB.B	NDE	TO-220	3	45	502	33	6985	4.06
LM340T-5.0/LF01	NDG	TO-220	3	45	502	25	8204.2	9.19
LM340T-5.0/LF01.B	NDG	TO-220	3	45	502	25	8204.2	9.19
LM340T-5.0/NOPB	NDE	TO-220	3	45	502	33	6985	4.06
LM340T-5.0/NOPB.B	NDE	TO-220	3	45	502	33	6985	4.06
LM7805CT/NOPB	NDE	TO-220	3	45	502	33	6985	4.06
LM7805CT/NOPB.B	NDE	TO-220	3	45	502	33	6985	4.06
LM7805S/NOPB	KTT	TO-263	3	45	502	25	8204.2	9.19
LM7805S/NOPB.B	KTT	TO-263	3	45	502	25	8204.2	9.19
LM7812CT/NOPB	NDE	TO-220	3	45	502	33	6985	4.06
LM7812CT/NOPB.B	NDE	TO-220	3	45	502	33	6985	4.06
LM7812S/NOPB	KTT	TO-263	3	45	502	25	8204.2	9.19
LM7812S/NOPB.B	KTT	TO-263	3	45	502	25	8204.2	9.19
LM7815CT/NOPB	NDE	TO-220	3	45	502	33	6985	4.06
LM7815CT/NOPB.B	NDE	TO-220	3	45	502	33	6985	4.06

NDE0003B

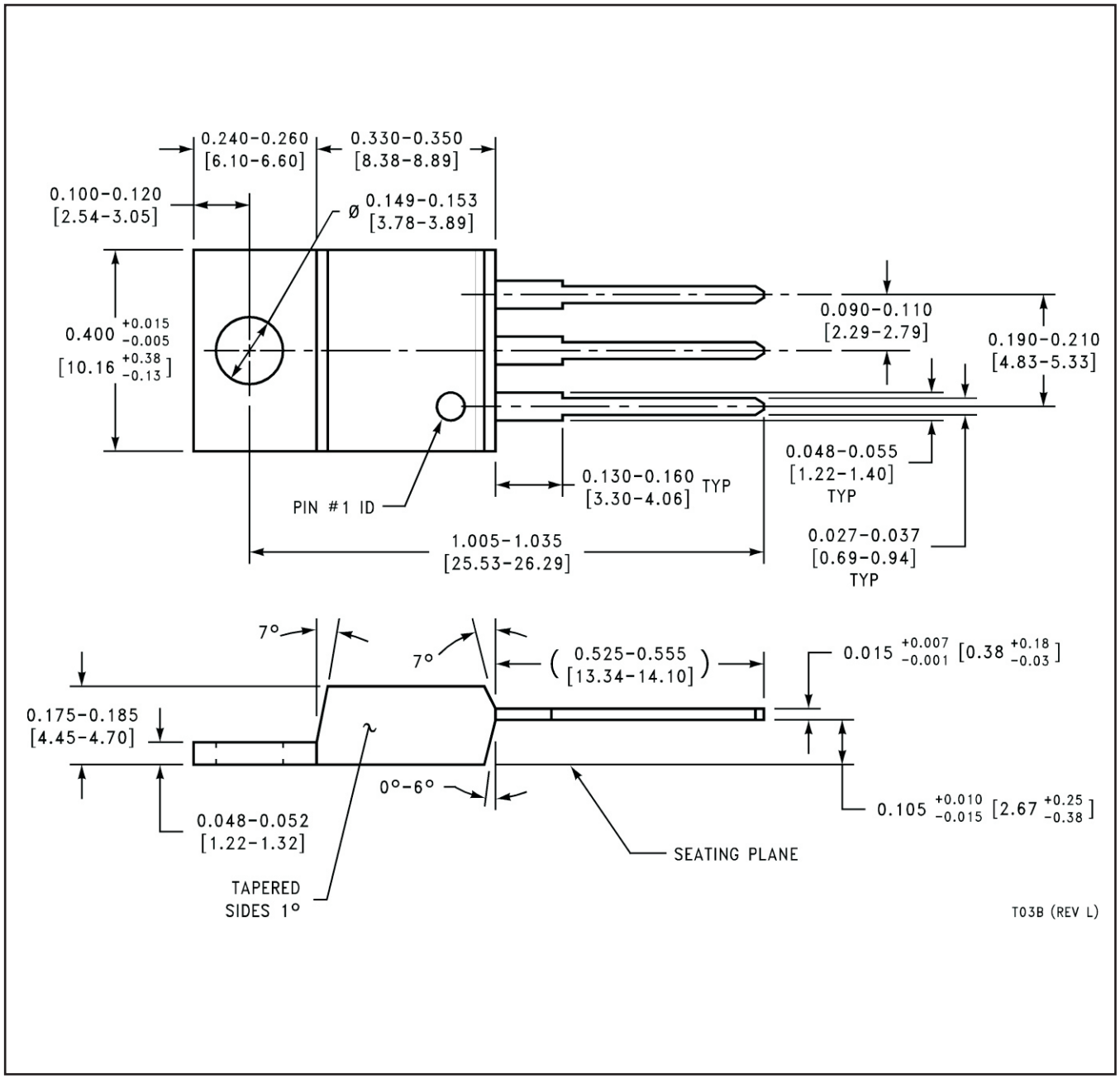
0.240-0.260
[6.10-6.60]
0.330-0.350
[8.38-8.89]
0.100-0.120
[2.54-3.05]
Ø 0.149-0.153
[3.78-3.89]
0.400 +0.015 -0.005
[10.16 +0.38 -0.13]
0.090-0.110
[2.29-2.79]
0.190-0.210
[4.83-5.33]
0.048-0.055
[1.22-1.40]
TYP
0.130-0.160 TYP
[3.30-4.06]
PIN #1 ID
1.005-1.035
[25.53-26.29]
0.027-0.037
[0.69-0.94]
TYP
7°
7°
(0.525-0.555)
[13.34-14.10]
0.015 +0.007 -0.001 [0.38 +0.18 -0.03]
0.175-0.185
[4.45-4.70]
0°-6°
0.105 +0.010 -0.015 [2.67 +0.25 -0.38]
0.048-0.052
[1.22-1.32]
SEATING PLANE
TAPERED
SIDES 1°
T03B (REV L)

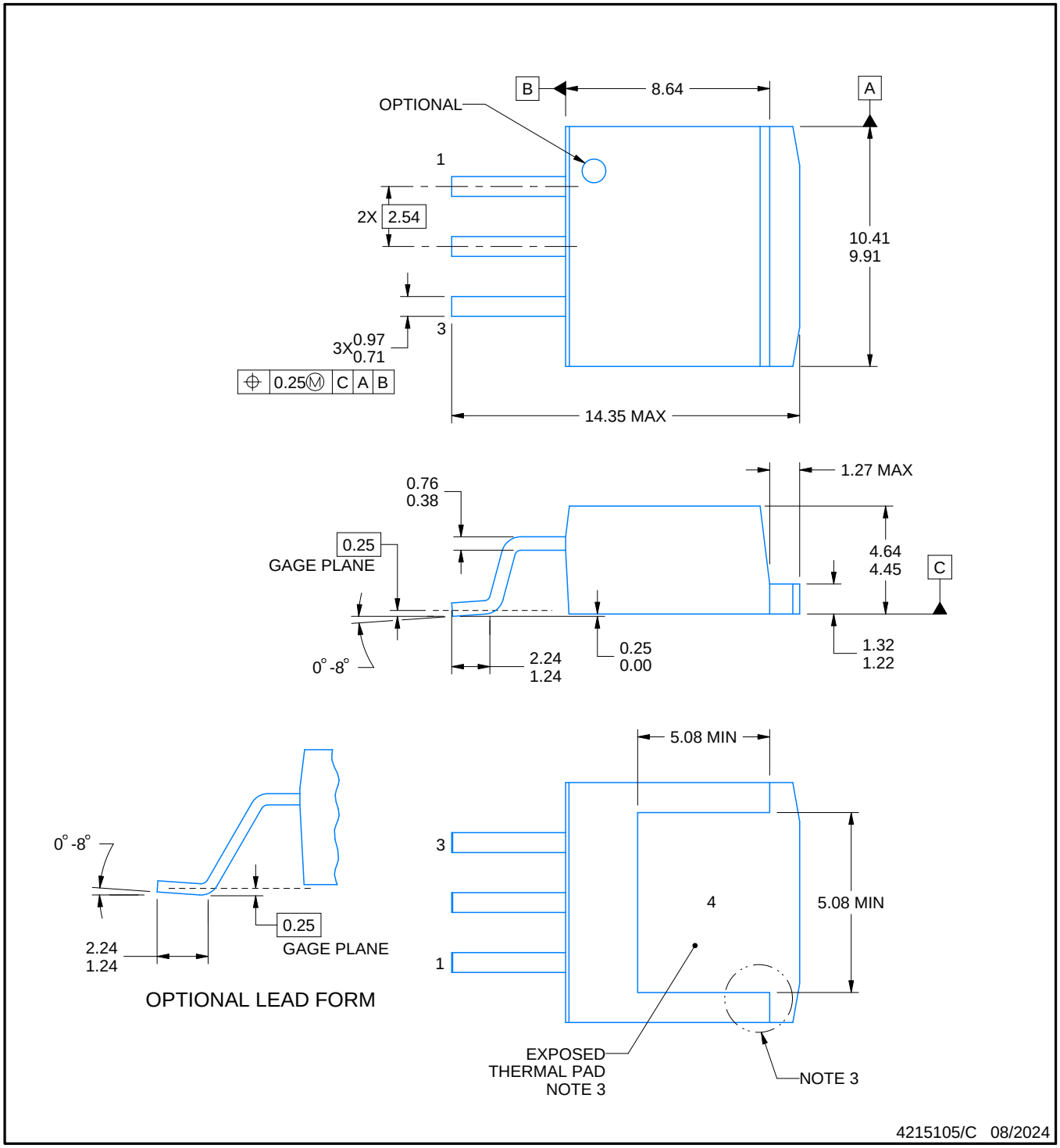

NOTES:

1. All linear dimensions are in millimeters. Any dimensions in parenthesis are for reference only. Dimensioning and tolerancing per ASME Y14.5M.
2. This drawing is subject to change without notice.
3. Features may not exist and shape may vary per different assembly sites.
4. Reference JEDEC registration TO-263, except minimum lead thickness and minimum exposed pad length.

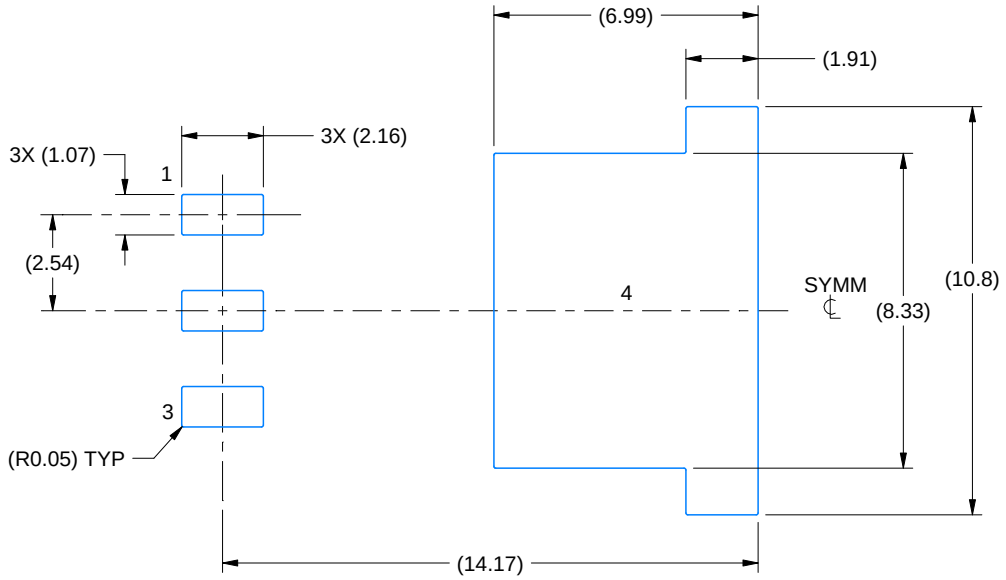

LAND PATTERN EXAMPLE
EXPOSED METAL SHOWN
SCALE:5X

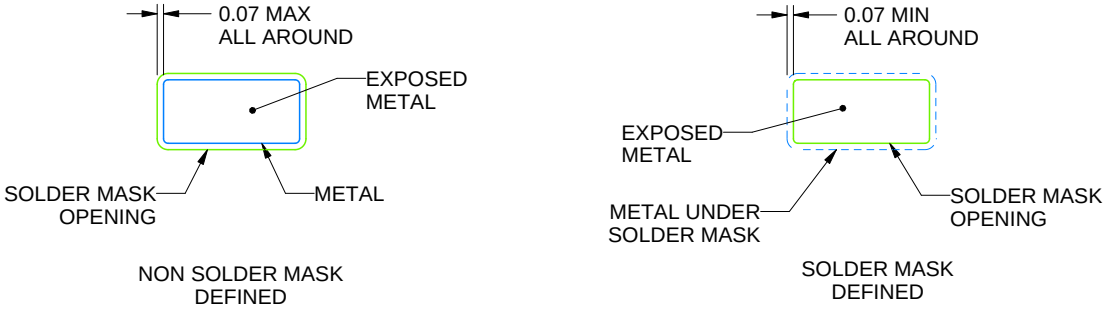

SOLDER MASK DETAILS

4215105/C 08/2024

NOTES: (continued)

5. This package is designed to be soldered to a thermal pad on the board. For more information, see Texas Instruments literature numbers SLMA002(www.ti.com/lit/slm002) and SLMA004 (www.ti.com/lit/slma004).
6. Vias are optional depending on application, refer to device data sheet. It is recommended that vias under paste be filled, plugged or tented.

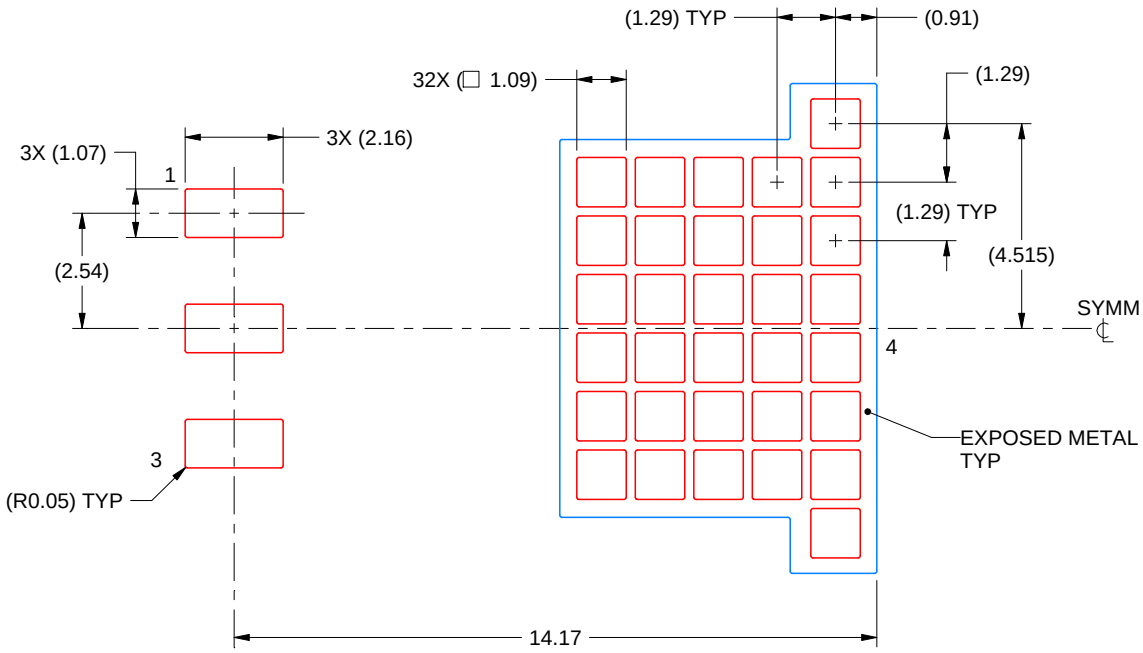

SOLDER PASTE EXAMPLE
BASED ON 0.125 mm THICK STENCIL

EXPOSED PAD
60% PRINTED SOLDER COVERAGE BY AREA
SCALE:6X

4215105/C 08/2024

NOTES: (continued)

7. Laser cutting apertures with trapezoidal walls and rounded corners may offer better paste release. IPC-7525 may have alternate design recommendations.
8. Board assembly site may have different recommendations for stencil design.

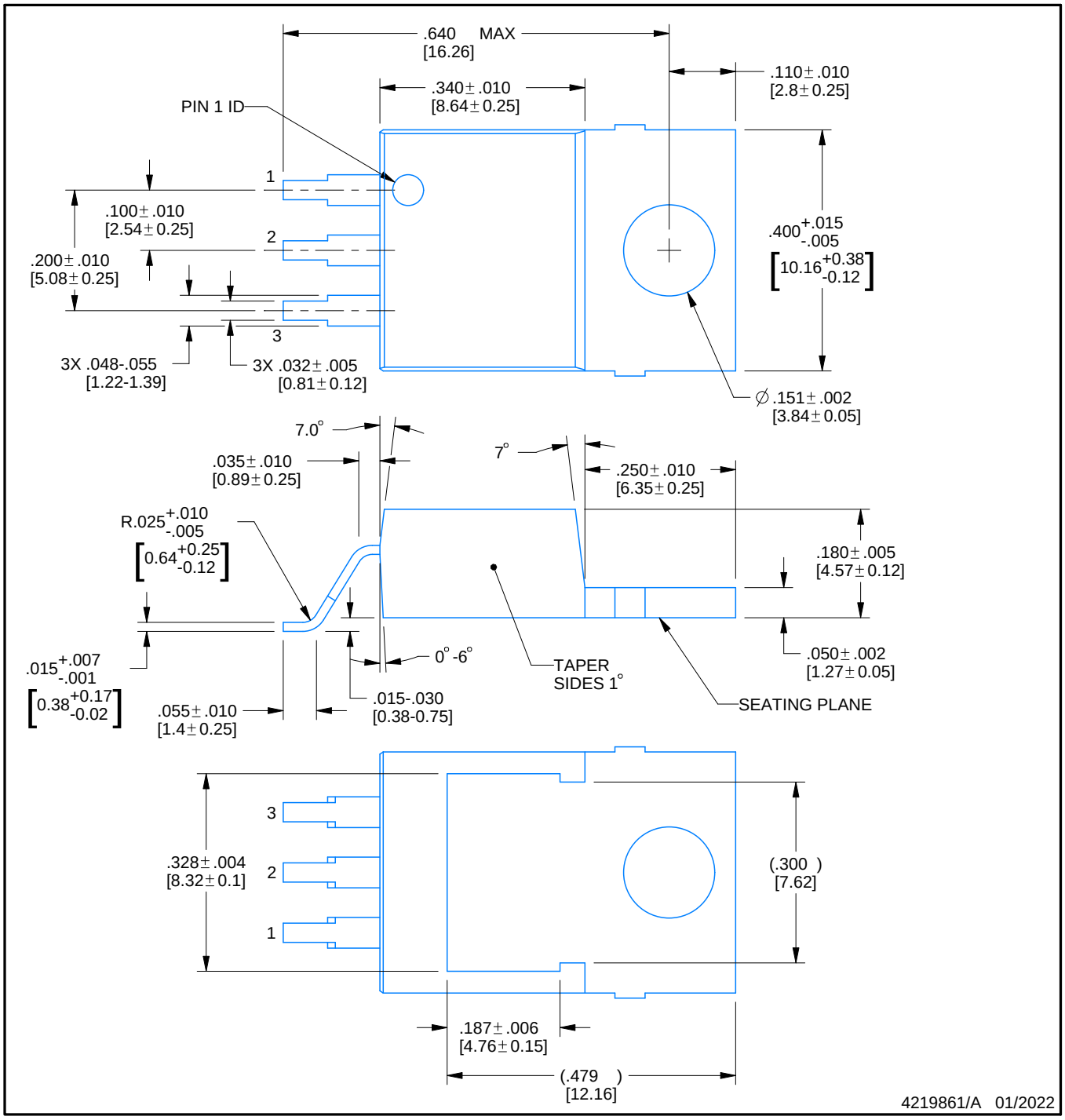

NOTES:

1. All controlling linear dimensions are in inches. Dimensions in brackets are in millimeters. Any dimension in brackets or parenthesis are for reference only. Dimensioning and tolerancing per ASME Y14.5M.
2. This drawing is subject to change without notice.

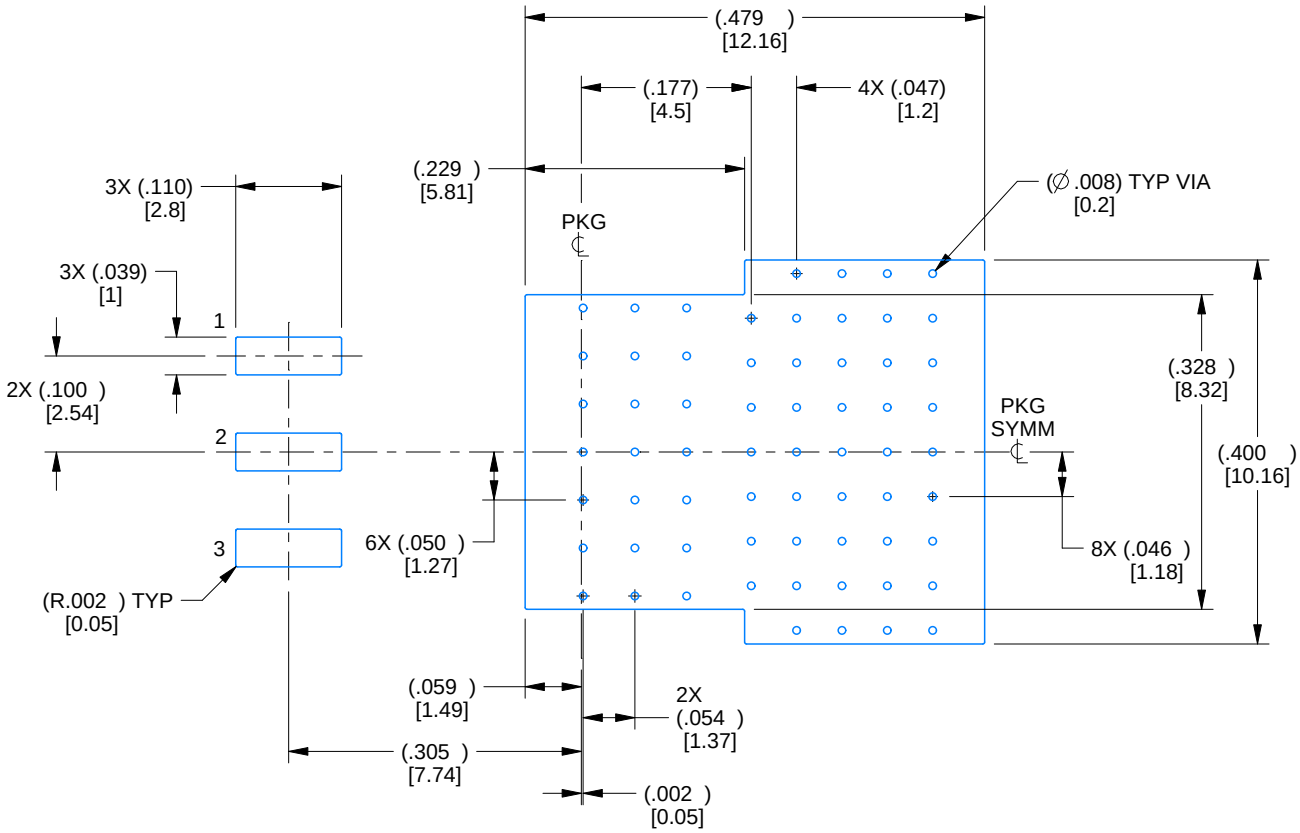

LAND PATTERN EXAMPLE
EXPOSED METAL SHOWN
SCALE: 5X

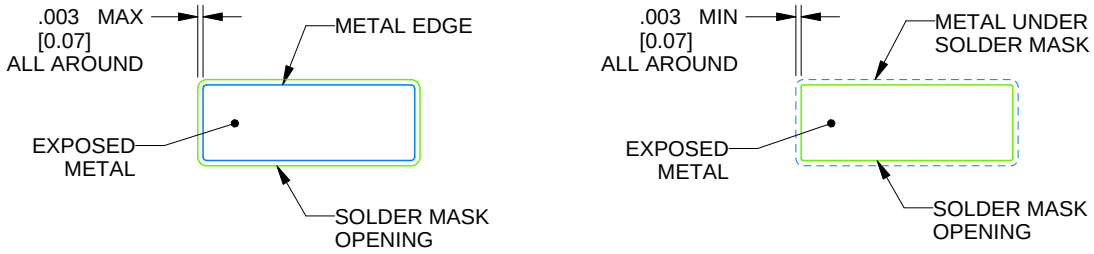

SOLDER MASK DETAILS

4219861/A 01/2022

NOTES: (continued)

3. This package is designed to be soldered to a thermal pad on the board. For more information, see Texas Instruments literature numbers SLMA002(www.ti.com/lit/slm002) and SLMA004 (www.ti.com/lit/slma004).
4. Vias are optional depending on application, refer to device data sheet. It is recommended that vias under paste be filled, plugged or tented.

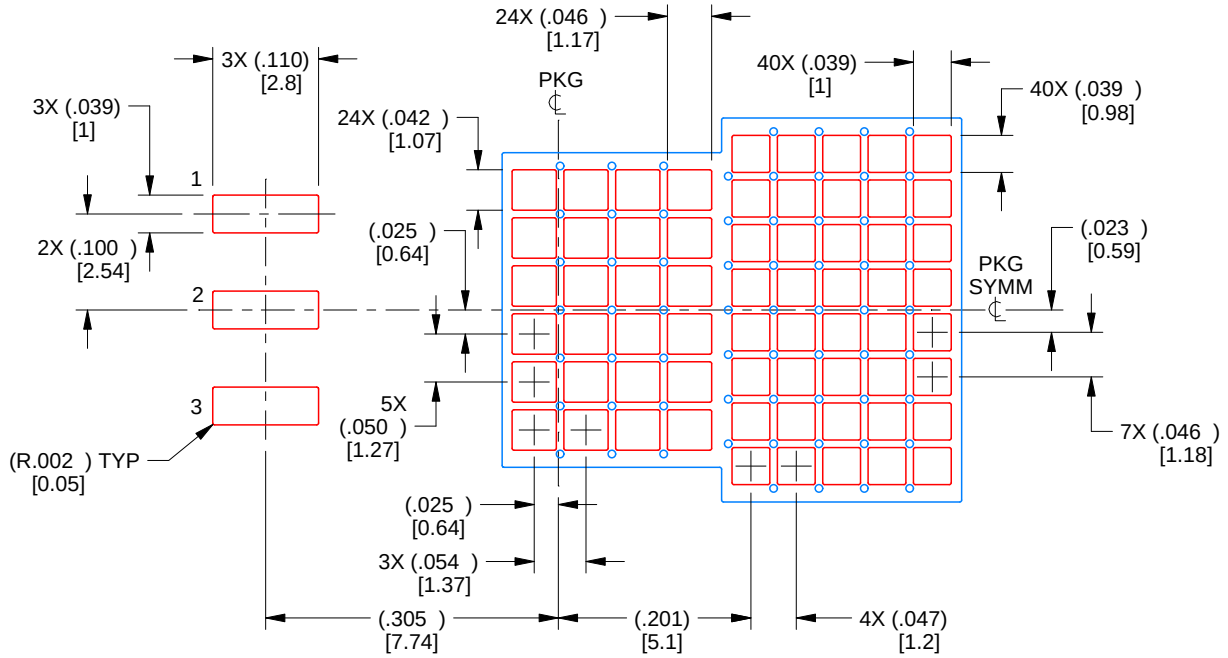

SOLDER PASTE EXAMPLE
BASED ON 0.125 mm THICK STENCIL

EXPOSED PAD
61% PRINTED SOLDER COVERAGE BY AREA UNDER PACKAGE
SCALE: 5X

4219861/A 01/2022

NOTES: (continued)

5. Laser cutting apertures with trapezoidal walls and rounded corners may offer better paste release. IPC-7525 may have alternate design recommendations.
6. Board assembly site may have different recommendations for stencil design.

DCY (R-PDSO-G4) **PLASTIC SMALL-OUTLINE**

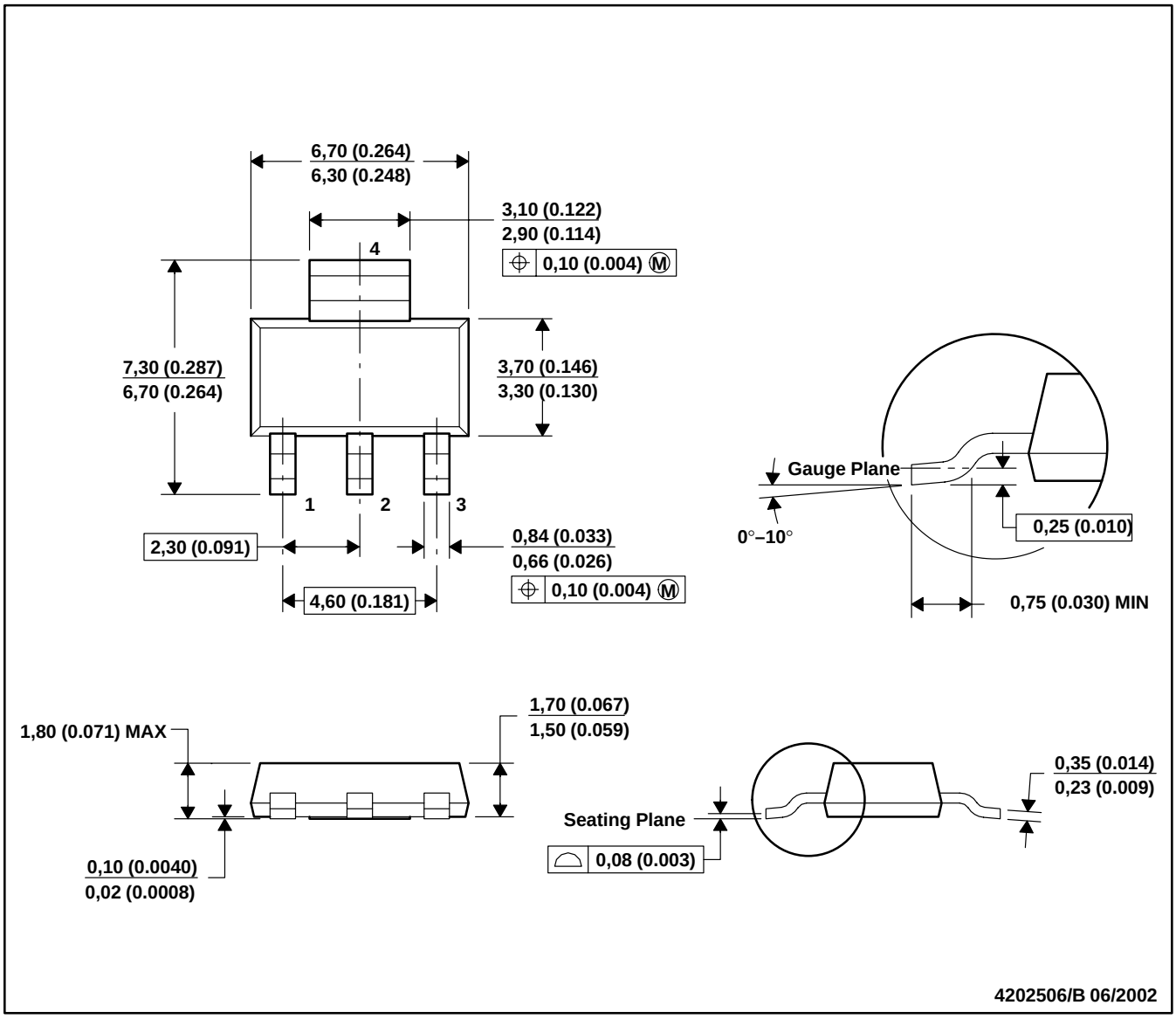

NOTES: A. All linear dimensions are in millimeters (inches).
B. This drawing is subject to change without notice.
C. Body dimensions do not include mold flash or protrusion.
D. Falls within JEDEC TO-261 Variation AA.

DCY (R–PDSO–G4) PLASTIC SMALL OUTLINE

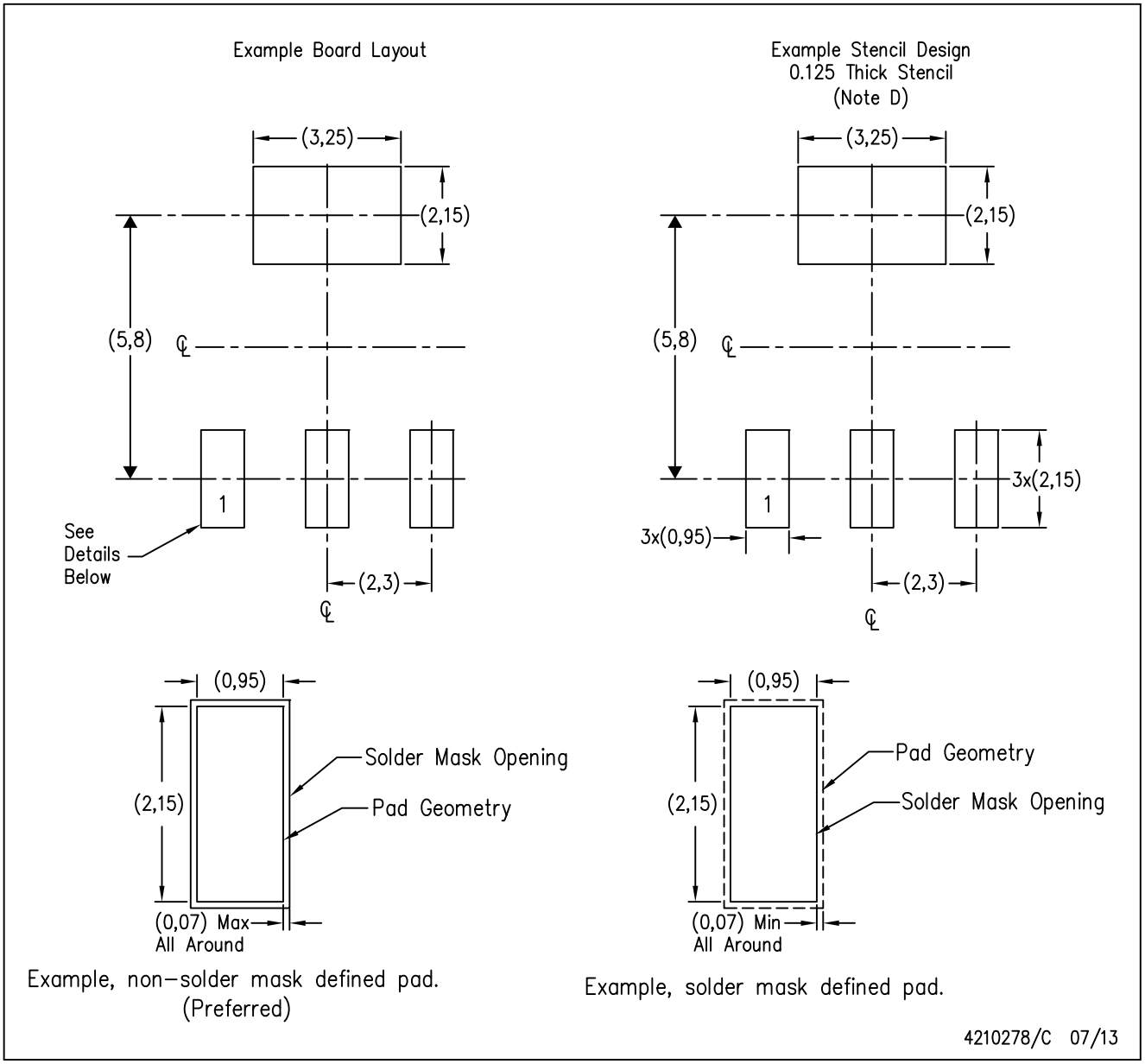

NOTES:

A. All linear dimensions are in millimeters.

B. This drawing is subject to change without notice.

C. Publication IPC–7351 is recommended for alternate designs.

D. Laser cutting apertures with trapezoidal walls and also rounding corners will offer better paste release. Customers should contact their board assembly site for stencil recommendations. Refer to IPC 7525 for stencil design considerations.

IMPORTANT NOTICE AND DISCLAIMER

TI PROVIDES TECHNICAL AND RELIABILITY DATA (INCLUDING DATA SHEETS), DESIGN RESOURCES (INCLUDING REFERENCE DESIGNS), APPLICATION OR OTHER DESIGN ADVICE, WEB TOOLS, SAFETY INFORMATION, AND OTHER RESOURCES “AS IS” AND WITH ALL FAULTS, AND DISCLAIMS ALL WARRANTIES, EXPRESS AND IMPLIED, INCLUDING WITHOUT LIMITATION ANY IMPLIED WARRANTIES OF MERCHANTABILITY, FITNESS FOR A PARTICULAR PURPOSE OR NON-INFRINGEMENT OF THIRD PARTY INTELLECTUAL PROPERTY RIGHTS.

These resources are intended for skilled developers designing with TI products. You are solely responsible for (1) selecting the appropriate TI products for your application, (2) designing, validating and testing your application, and (3) ensuring your application meets applicable standards, and any other safety, security, regulatory or other requirements.

These resources are subject to change without notice. TI grants you permission to use these resources only for development of an application that uses the TI products described in the resource. Other reproduction and display of these resources is prohibited. No license is granted to any other TI intellectual property right or to any third party intellectual property right. TI disclaims responsibility for, and you will fully indemnify TI and its representatives against, any claims, damages, costs, losses, and liabilities arising out of your use of these resources.

TI’s products are provided subject to TI’s Terms of Sale or other applicable terms available either on ti.com or provided in conjunction with such TI products. TI’s provision of these resources does not expand or otherwise alter TI’s applicable warranties or warranty disclaimers for TI products.

TI objects to and rejects any additional or different terms you may have proposed.

Mailing Address: Texas Instruments, Post Office Box 655303, Dallas, Texas 75265
Copyright © 2025, Texas Instruments Incorporated