ART FILM - ADT

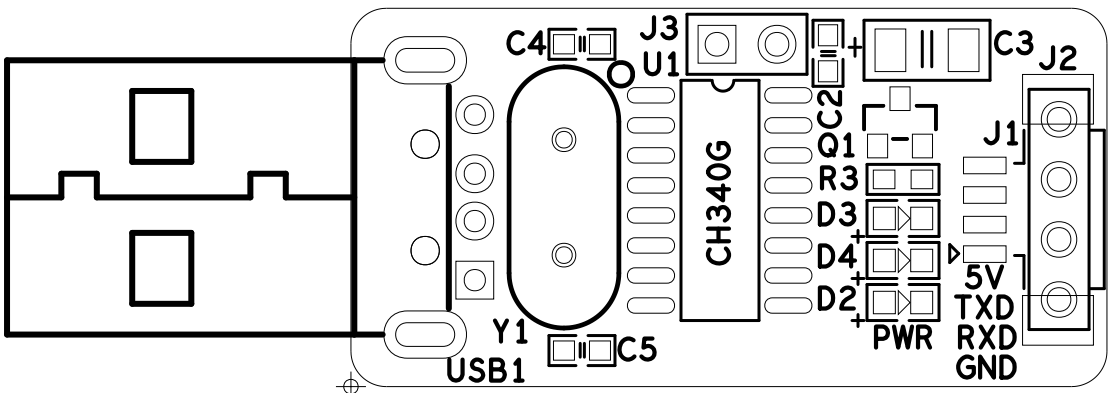

ART FILM - ADT

ART FILM - ADB

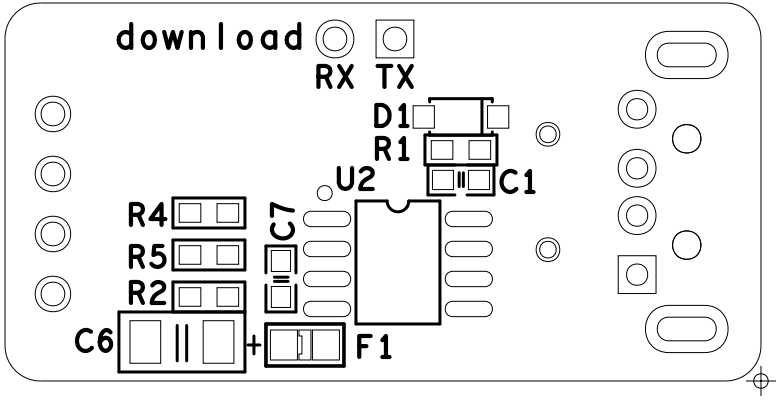

ART FILM - ADB