1.1.63

ee25btech11063 - Vejith

March 23, 2026

Question

The natural frequency of the system shown below is (ME 2007)

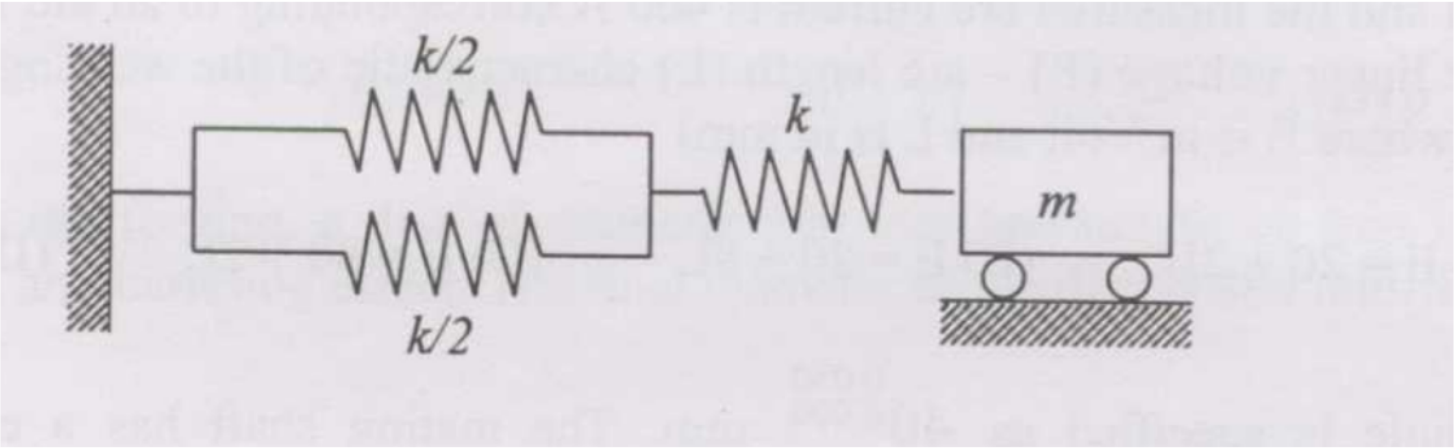

- $\sqrt{\frac{k}{2m}}$
- $\sqrt{\frac{k}{m}}$
- $\sqrt{\frac{2k}{m}}$
- $\sqrt{\frac{3k}{m}}$

Solution

Two springs of stiffness $k/2$ are connected in parallel, and this combination is in series with a spring of stiffness k, attached to a mass m.

Parallel Combination :
Springs are in parallel when they have the same displacement. The equivalent stiffness is:

$$k_{\text{parallel}} = k_1 + k_2 \tag{1}$$

Here,

$$k_{\text{parallel}} = \frac{k}{2} + \frac{k}{2} = k \tag{2}$$

Solution

Series Combination :
Springs are in series when they experience the same force. The equivalent stiffness is:

$$\frac{1}{k_{\text{eq}}} = \frac{1}{k_1} + \frac{1}{k_2} \tag{3}$$

Thus,

$$\frac{1}{k_{\text{eq}}} = \frac{1}{k} + \frac{1}{k} = \frac{2}{k} \tag{4}$$

$$k_{\text{eq}} = \frac{k}{2} \tag{5}$$

Conclusion

Natural Frequency :
The natural frequency is given by:

$$\omega_n = \sqrt{\frac{k_{\text{eq}}}{m}} \tag{6}$$

Substituting,

$$\implies \omega_n = \sqrt{\frac{k}{2m}} \tag{7}$$