digital EQUIPMENT CORPORATION MAYNARD MASSACHUSETTS

DRAWING DIRECTORY

"THIS DRAWING AND SPECIFICATIONS, HEREIN, ARE THE PROPERTY OF DIGITAL EQUIPMENT CORPORATION AND SHALL NOT BE REPRODUCED OR COPIED OR USED IN WHOLE OR IN PART AS THE BASIS FOR THE MANUFACTURE OR SALE OF ITEMS WITHOUT WRITTEN PERMISSION. COPYRIGHT © 1974 , DIGITAL EQUIPMENT CORPORATION"

CUSTOMER PRINT SET INDEX

THIS IS PRINT SET ☐☐☐☐

SEQUENCE	
DRAWING DIRECTORY, KC8-A	B-DD-KC8-A
FIELD INSTALLATION & ACCEPTANCE PROCEDURE	A-SP-KC8-A-1
SHIPPING LIST	A-PL-KC8-A-2
BEZEL ASSY	E-UA-KC8-A-Ø
KEYBOARD ASSY	D-AD-7010644-0-0
INDICATOR DISPLAY	D-CS-5411241-0-1
REGISTERS & CONTROL	D-CS-5411316-0-1

UNIT VARIATIONS

VAR	TITLE	PRINT SET MP-KC8-A
KC8-AA	BEZEL ASSY(PROGRAMMERS CONSOLE)	X
KC8-AB	BEZEL ASSY(REMOTE PROG'S CONSOLE)	X

REVISIONS		
REV	CHG. NO.	DATE
A	KC8A-00001	4-75
B	KC8A-00002	6-75
C	KC8A-00003	10-75
D	KC8A-00004	7-76

USED ON OPTION/MODEL: 8/A

SHEET 1 OF 3

DRN. J. CAHILL	DATE 12/13/74	TITLE: DRAWING DIRECTORY KC8-A
CHK'D. S. Roberts	DATE 1-14-75	
PROJ ENG. [illegible]	DATE 1-23-75	
PROD. [illegible]	DATE 1-23-75	SIZE B / CODE DD / NUMBER KC8-A / REV D
FIELD SERV.	DATE	DIST

DRB 106

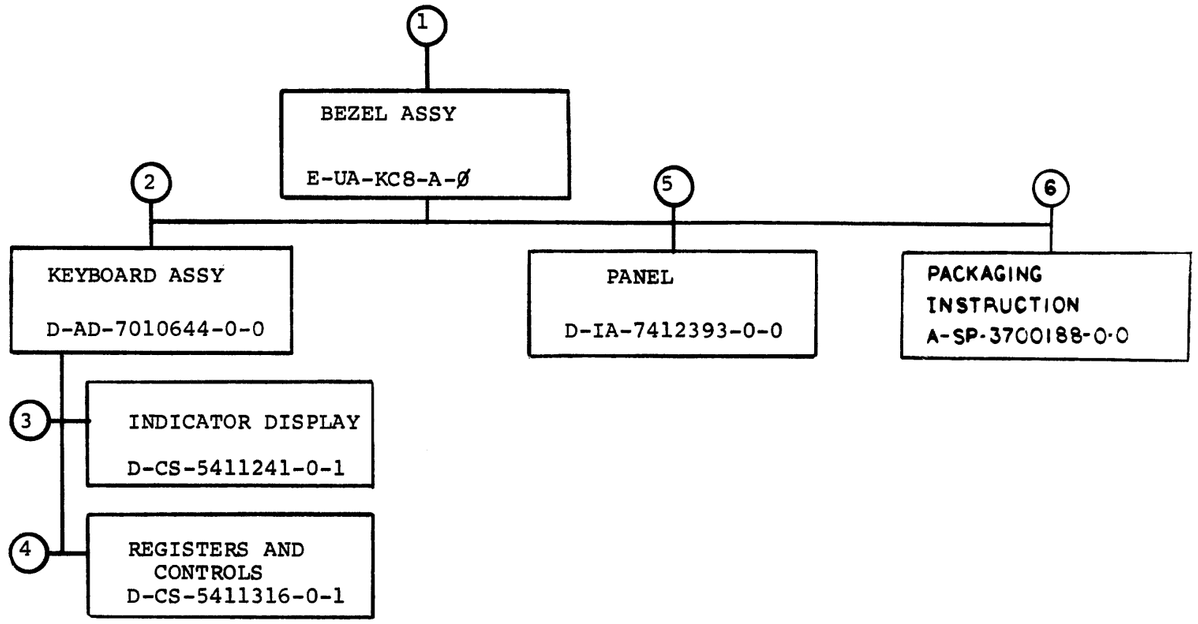

TITLE		SIZE	CODE	NUMBER	REV
DRAWING DIRECTORY KC8-A	SHEET 2 OF 3	B	DD	KC8-A	D

ELECTRICAL

CUSTOMER PRINT SET MP-KC8-A	MFG. SET	FIND NO.	DRAWING NO.	REV	NO OF SHT	DESCRIPTION	OPTION NO./FILE DATE
X		3	D-CS-5411241-0-1	#	3	INDICATOR DISPLAY	
			K-CO-5411241-0-4	#	1	X-Y COORDINATE HOLE LOCATION	
			D-AH-5411241-0-5	#	1	ASSY/DRILLING HOLE LAYOUT	
			B-MH-5411241-0-6	#	1	MODULE ECO HISTORY	
X		4	D-CS-5411316-0-1	#	3	REGISTERS AND CONTROL	
			K-CO-5411316-0-4	#	1	X-Y COORDINATE HOLE LOCATION	
			D-AH-5411316-0-5	#	1	ASSY/DRILLING HOLE LAYOUT	
			B-MH-5411316-0-6	#	1	MODULE ECO HISTORY	

MECHANICAL

CUSTOMER PRINT SET MP-KC8-A	MFG SET	FIND NO.	DRAWING NO.	REV	NO OF SHT	DESCRIPTION	OPTION NO./FILE DATE
X		1	E-UA-KC8-A-Ø	D	1	BEZEL ASSY	
			E-MD-7412349-3-0	#	2	BEZEL MACHINED SAND CASTING	
			B-MD-7412352-0-0	#	1	CLIP	
			C-IA-7411987-0-0	#	1	BRACKET BEZEL	
			D-MD-7413361-0-0	#	1	COVER PROTECTIVE BEZEL	
X			A-SP-KC8-A-1	*		FIELD INST. & ACCEPT. PROCEDURE	
X			A-PL-KC8-A-2	*	1	SHIPPING LIST	
X		2	D-AD-7010644-0-0		1	KEYBOARD ASSY	
		5	D-IA-7412393-0-0	#	1	PANEL	
			C-SS-7412393-1-1	#	1	SILK SCREEN	
			C-SS-7412393-1-2	#	1	SILK SCREEN	
			C-SS-7412393-1-3	#	1	SILK SCREEN	
			C-SS-7412393-2-1	#	1	SILK SCREEN	
			C-SS-74122393-2-2	#	1	SILK SCREEN	
		6	A-SP-3700188-0-0	#	2	PACKAGING INSTRUCTION	
			A-SP-9905703-0-0	#	1	LAMINATED BUILD-UP	
			A-SP-9905704-0-0	#	1	REGULAR SLOTTED CARTON	
			A-SP-9905723-0-0	#	1	REGULAR SLOTTED CARTON	
			A-SP-9905129-0-0	#	1	POLY BAG	

CUSTOMER PRINT SET CODES

X = PRINT OF DOCUMENT INCLUDED IN PRINT SET
C = INCLUDES ALL PRINTS INDICATED ON DOCUMENT
S = CONFIDENTIAL AUTHORIZED SIGNATURE REQUIRED

TITLE: DRAWING DIRECTORY KC8-A

SHEET 3 OF 3

SIZE	CODE	NUMBER	REV
B	DD	KC8-A	D

DRB 108

DEC 16-(325)-1062-2B-R972

DIGITAL EQUIPMENT CORPORATION
MAYNARD, MASSACHUSETTS

PARTS LIST

MADE BY Paul Gardner	CHECKED	SECTION 1
DATE 3/19/75	DATE 7-2-75	
ENG DATE 9/22/75	PROD DATE 9-20-75	ISSUED SECT. 1

ITEM NO.	DWG NO./PART NO.	DESCRIPTION	QUANTITY/VARIATION KC8-AA, -AB
1	MP-KC8-A	*KC8-A MAINTENANCE PRINT SET	0
*	This item is an option and is to be shipped only when purchased as a separate item.		

TITLE	ASSY NO.	SIZE	CODE	NUMBER	REV.	ECO NO.
SHIPPING LIST, KC8-A		A	PL	KC8-A-2		
	SHEET 1 OF 1	DIST.				

DEC FORM DRA 110 DEC 16-(325)-1031-N870

DO NOT SCALE DRAWING

"DRAWINGS AND SPECIFICATIONS, HEREIN, ARE THE PROPERTY OF GENERAL SCANNING CORPORATION, AND SHALL NOT BE REPRODUCED OR COPIED OR USED IN PART OR IN WHOLE OR LOANED OR DISCLOSED TO ANY OTHER PERSON OR FIRM WITHOUT THE PRIOR WRITTEN PERMISSION OF GSI. COPYRIGHT 1974, GENERAL SCANNING CORPORATION"

LEGEND	
PART NO	VARIATION
KC8-AA	PROG'S CONSOLE(SEE PL)
KC8-AB	REMOTE PROG'S CONSOLE(SEE PL)

NOTES:

1. ASSEMBLE ITEM "1 (PANEL) TO ITEM "2 (BEZEL) USING SILASTIC ADHESIVE ITEM "14
2. FOR PROPER ALIGNMENT OF KEYPAD OF MODULE ASSEMBLY (ITEM "5) INTO BEZEL (ITEM "2), DO THE FOLLOWING:
   - PLACE MODULE ASSEMBLY (ITEM "5) INTO BEZEL (ITEM "2).
   - START MOUNTING HARDWARE, ITEMS 6, 7 AND 21 INTO BEZEL.
   - BEFORE TIGHTENING DOWN ITEMS 6, 7 AND 21, PUSH MODULE ASSEMBLY TOWARDS THE TOP OF BEZEL. THE KEYPAD, WHEN VIEWED FROM THE FRONT OF BEZEL, SHOULD JUST TOUCH THE TOP EDGE OF THE KEYPAD CUTOUTS IN BEZEL.
   - TIGHTEN ITEMS 6, 7 AND 21.
   - NOW SECURE MODULE ASSEMBLY BOTTOM TO BEZEL WITH ITEMS 3, 4 AND 8; BEING SURE THAT CLIPS (ITEM "8) ARE PRESSED FIRMLY AGAINST MODULE ASSEMBLY.

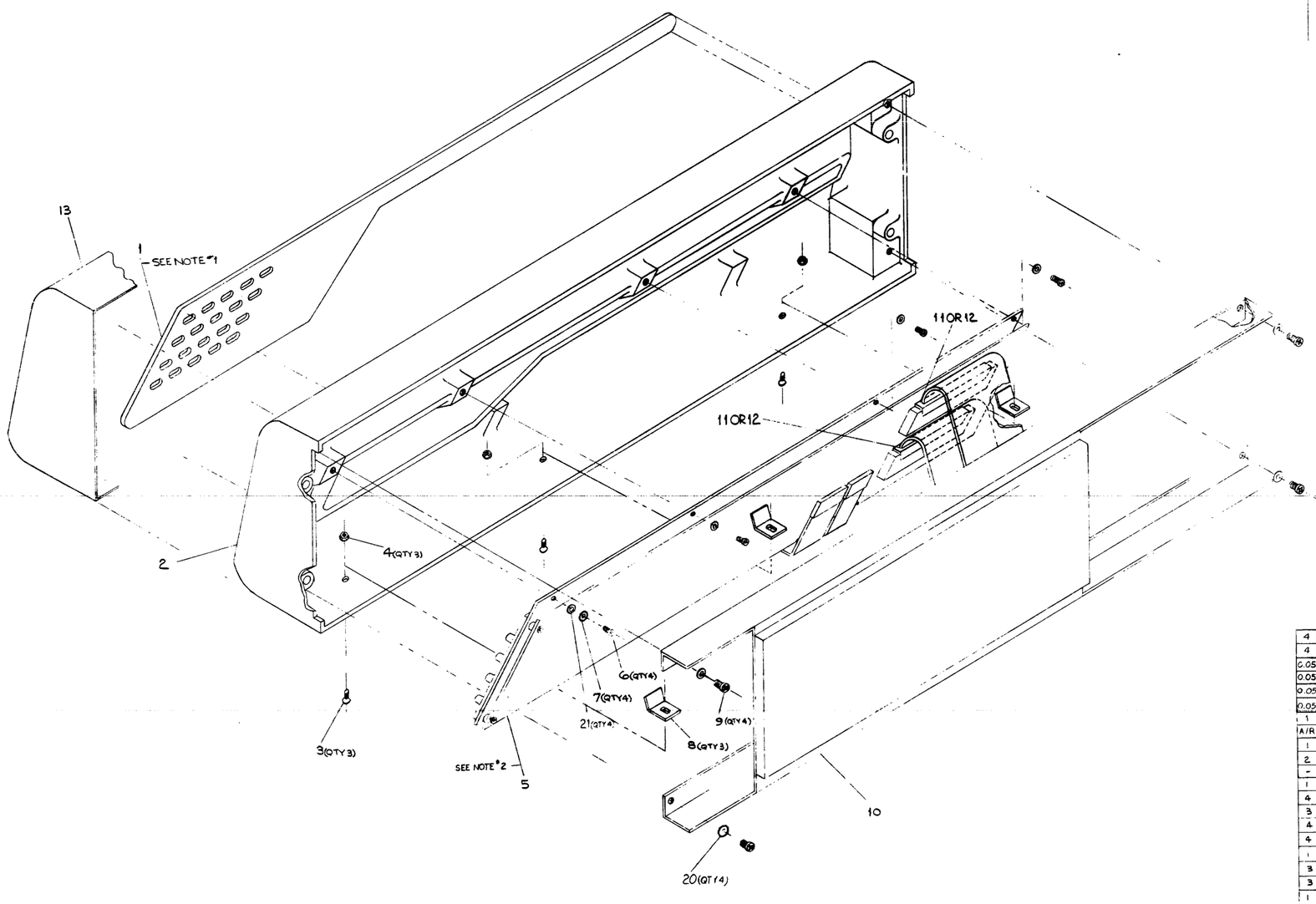

ITEM NO.	DESCRIPTION	PART NO.	QTY. KC8-AA	QTY. KC8-AB
21	WASHER FLAT	9006653	4	4
20	WASH, EXT TOOTH LOCK "6	9008151	4	4
19	POLY BAG	3905129	0.05	0.05
18	LAMINATED BUILD UP L.H.	3905703-01	0.05	0.05
17	LAMINATED BUILD UP R.H.	3905703-00	0.05	0.05
16	REGULAR SLOTTED CARTON	3905704-00	0.05	0.05
15	SHIPPING LIST	A-PL-KC8-A-2	1	1
14	ADHESIVE, SILASTIC	9009158	A/R	A/R
13	COVER, PROTECTIVE, BEZEL	D-MD-7413361-00	1	1
12	I/O CABLE BC08R	C-UA-BC08R-12	2	-
11	I/O CABLE BC08R	C-UA-BC08R-01	-	2
10	BRACKET BEZEL	C-IA-7411987-0-0	1	1
9	SCR, PHL HD PAN "8-32 X .25	9006085-1	4	4
8	CLIP	B-MD-7412352-0-0	3	3
7	WASH, EXT TOOTH LOCK "6	9007649	4	4
6	SCR, PHL HD PAN "6-32 X 2.5	9006020-1	4	4
5	KEYBOARD ASSY	D-AD-7010644-00	1	1
4	NUT KEPS #4-40	9006557	3	3
3	SCR, PHL HD FLAT "4-40 X .375	9006011-2	3	3
2	BEZEL (MACHINED SAND CAST)	E-MD-7412349-3-0	1	1
1	PANEL	D-IA-7412398-1-0	1	1

FIRST USED ON OPTION/MODEL	8/A	PARTS LIST	
DIMENSIONAL TOLERANCE	DRWN	DATE 12-10-74	
DIMENSIONS ARE MILLIMETERS INCHES UNLESS OTHERWISE SPECIFIED	CHKD	DATE 1-13-75	
MILLIMETERS: XXX ±0.25, XX ±0.5, X ±1.0 — INCHES: XXX ±.005, XX ±.02, X ±.1 — ANGLES ±0° 30'	ENGR	DATE 1-13-75	
THIRD ANGLE PROJECTION	PROJ ENG	DATE 2-12-75	
REMOVE BURRS AND BREAK SHARP CORNERS SURFACE QUALITY ✓	PROD	DATE 2-27-75	
MATERIAL SEE PARTS LIST	NEXT HIGHER ASSY. B-DD-KC8-A		
FINISH	SCALE NONE	SHEET 1 OF 1	

TITLE: BEZEL ASSY

SIZE	CODE	NUMBER	REV.
E	LIA	KC8-A-Ø	D

DIST.

D LIAKC8-A-Ø

REV.	DESCRIPTION	DRWN	CHK	DATE
A	KCBA-00003	G. LORD		6-31-75
B	KCBA-00002	G. LORD		6-27-75
C	KCBA-00001	G. LORD		6-31-75

"THIS DRAWING AND SPECIFICATIONS, HEREIN, ARE THE PROPERTY OF DIGITAL EQUIPMENT CORPORATION AND SHALL NOT BE REPRODUCED OR COPIED OR USED IN WHOLE OR IN PART AS THE BASIS FOR THE MANUFACTURE OR SALE OF ITEMS WITHOUT WRITTEN PERMISSION. COPYRIGHT © 1974, DIGITAL EQUIPMENT CORPORATION"

DO NOT SCALE DRAWING

NOTES:

1. INSTALL ITEM #2 (CABLE) AS FOLLOWS.
   PCB-1-J1 TO PCB-2-J3
   PCB-1-J2 TO PCB-2-J4
2. CONNECT RED WIRE FROM PCB-1 TO TB1 ON PCB-2. CONNECT BLACK WIRE FROM PCB-1 TO TB2 ON PCB-2.
3. ITEM #7 MAY BE RECYCLED WHEN USED FOR INTERPLANT SHIPMENT.
4. CLIP UPPER RIGHT HAND LIP OF KEYPAD OFF TO ALLOW PROPER ALIGNMENT INTO BEZEL.

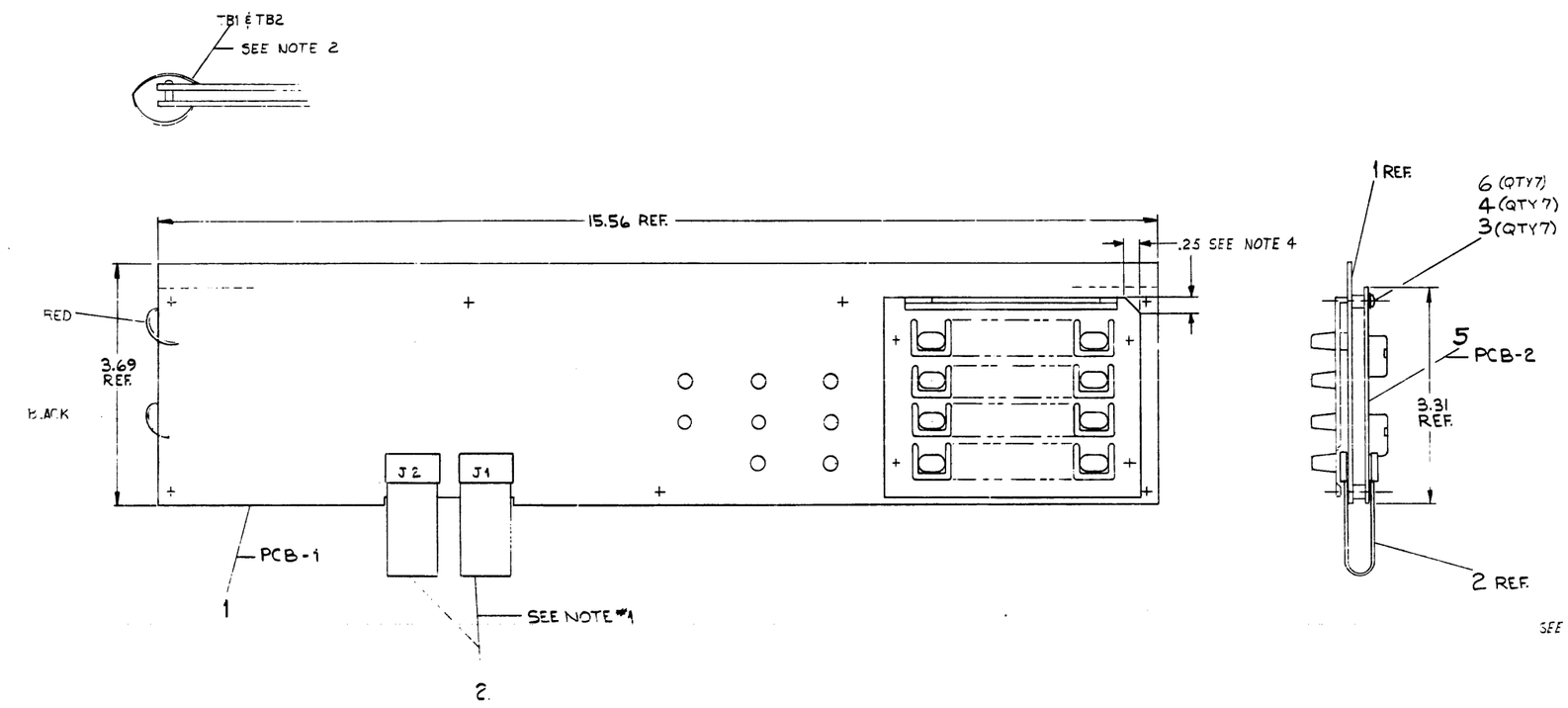

SEE NOTE 3

QTY.	DESCRIPTION	PART NO.	ITEM NO.
1	PACKAGING INSTRUCTIONS	A-SP-3700188-0-0	7
7	WASHER, FLAT #4	9006655	6
1	REGISTERS AND CONTROL	D-CS-5411316-0-1	5
7	WASH INT LOCK #4	9006632	4
7	SCR PHL HD PAN #4-40X.25	9008301-1	3
2	CABLE, KEYBOARD	C-IA-7008612-ØD	2
1	INDICATOR DISPLAY	D-CS-5411241-0-1	1

PARTS LIST

FIRST USED ON OPTION/MODEL: 8/A

DIMENSIONAL TOLERANCE
DIMENSIONS ARE [redacted] INCHES
UNLESS OTHERWISE SPECIFIED

MILLIMETERS	INCHES	ANGLES
X.XX = ±0.10	.XXX = ±.005	±0° 30'
X.X = ±0.5	.XX = ±.02	
X = ±2.	.X = ±.1	

THIRD ANGLE PROJECTION

REMOVE BURRS AND BREAK SHARP CORNERS SURFACE QUALITY ✓

MATERIAL: SEE PARTS LIST

FINISH

DRN. [signature] DATE 12-13-74
CHK'D. [signature] DATE 1-23-75
ENG. [signature] DATE 1-23-75
PROJ. ENG. [signature] DATE 1-23-75
PROD. [signature] DATE 1-23-75

NEXT HIGHER ASSY.: EUA-KC8-A-Ø

SCALE 1/1
SHEET 1 OF 1

digital

TITLE: KEYBOARD ASSY.

SIZE	CODE	NUMBER	REV.
D	AD	7010644-0-0	C

DIST.

REVISIONS

CHK	CHANGE NO.	REV.
7	7010644-00001	A
7	7010644-00002	B
7	7010644-00003	C

P. SCANTLEBURY

"THIS DRAWING AND SPECIFICATIONS, HEREIN, ARE THE PROPERTY OF DIGITAL EQUIPMENT CORPORATION AND SHALL NOT BE REPRODUCED OR COPIED OR USED IN WHOLE OR IN PART AS THE BASIS FOR THE MANUFACTURE OR SALE OF ITEMS WITHOUT WRITTEN PERMISSION.
DIGITAL EQUIPMENT CORPORATION"
COPYRIGHT © 1974

NOTES:

1. HAND INSERT KEYPAD AFTER WAVE SOLDERING
2. MOUNT ITEM #37 (INSERTS) IN 7Y HOLES, AFTER COMPONENTS HAVE BEEN MOUNTED.
3. DEC PART NUMBER 1210054 MAY BE SUBSTITUTED FOR DEC 1211813-01 ON THIS BOARD.
4. USE #4 HARDWARE ITEMS (38,39 & 40) TO MOUNT ITEMS 12 & 41 TO SIDE 1, EXCEPT AT LOWER LEFT CORNER.
5. USE ITEM 36 BETWEEN ITEM 9 (LED) AND BOARD BEFORE SOLDERING.
6. SEE DETAIL 'B' FOR ASSEMBLY OF KEYPAD.

WIRE TABLE

ITEM	FROM	WITH	TO	WITH	LENGTH
42	TB1	SOLDER	FREE	44	3.0"
43	TB2	SOLDER	FREE	44	3.0"

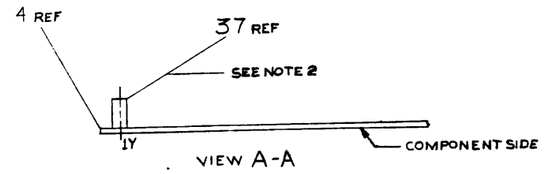

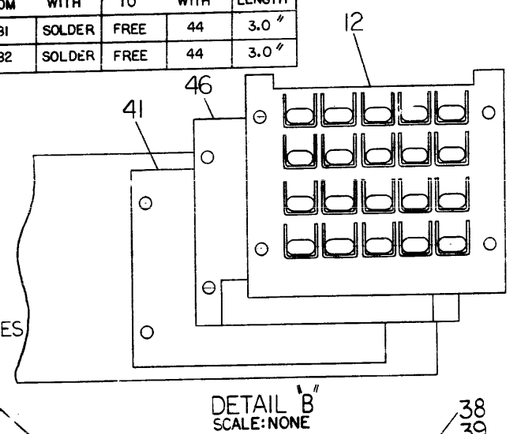

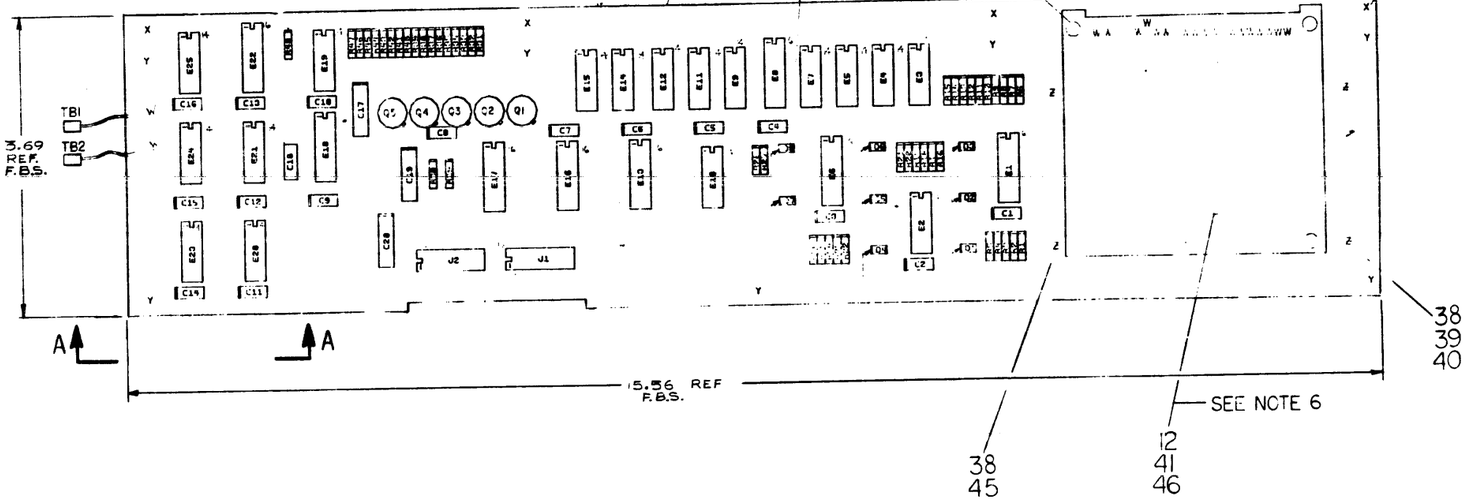

REF				
REF		X-Y COORDINATE HOLE LOCATION	K-CO-5411241-0-4	1
REF		ASSY/DRILLING HOLE LAYOUT	D-AH-5411241-0-5	2
REF		MODULE ECO HISTORY	B-MH-5411241-0-6	3
1		ETCHED CIRCUIT BOARD	5011240	4
1	C18	CAPACITOR, 82pf, 100V, 5%	1000015	5
16	C1 THRU C16	CAPACITOR, .01uf, 50V, AXIAL	1001610-00	6
1	C17	CAPACITOR, 1.0uf, 35V, 10%	1001776-00	7
2	C19,C20	CAPACITOR, 0.0uf, 35V, 10%	1005306	8
8	D1 THRU D8	LED	1110864	9
9	E3,E5,E7,E9,E11,E12,E14, E15,E4	14 PIN I.C. SOCKET	1211813-01 SEE NOTE #3	10
2	J1,J2	16 PIN I.C. SOCKET	1211813-02	11
1		KEYPAD ASSY.	1211856	12
1	R29	RESISTOR, 220, 1/4W, 5%	1300271	13
8	R16 THRU R21,R27,R29	RESISTOR, 330, 1/4W, 5%	1300295	14
5	R32,R35,R38,R41,R44	RESISTOR, 470, 1/4W, 5%	1300316	15
21	R1 THRU R15,R22 THRU R28, R48	RESISTOR, 1K, 1/4W, 5%	1300365	16
1	R48	RESISTOR, 10K, 1/4W, 5%	1300479	17
4	R36,R39,R42,R45	RESISTOR, 10, 1/4W, 5%	1301317	18
1	R30	RESISTOR, 750, 1/4W, 5%	1301401	19
6	R31,R33,R34,R37,R40,R43	RESISTOR, 27, 1/4W, 5%	1301522	20
1	R47	RESISTOR, 9.8K, 1/4W, 5%	1301423	21
5	Q1 THRU Q5	TRANSISTOR, MPSA05	1510705	22
1	E23	I.C. DEC 7474	1905547	23
1	E21	I.C. DEC 7420	1905577	24
1	E25	I.C. DEC 7490	1909051	25
1	E24	I.C. DEC 7495	1909055	26
1	E22	I.C. DEC 8251	1909594	27
1	E20	I.C. DEC 7404	1909686	28
1	E19	I.C. DEC 7418	1909928	29
1	E17	I.C. DEC 74145	1910047	30
2	E2,E10	I.C. DEC 7408	1910155	31
1	E18	I.C. DEC 74123	1910436	32
2	E1,E8	I.C. DEC 9318	1910454	33
3	E6,E13,E16	I.C. DEC 7447A	1911295	34
9	E3,E4,E5 E7,E9,E11,E12,E14 C19	7 SEG. DISPLAY	1911297	35
8		WASHER, SHOULDER	9008E18	36
7		INSERTS, P.C. BOARD	9009113-2	37
4		SCREW, PHIL... 4-...	9006014-01	38
7		NUT, HEX... 4-40	9006057	39
3		WASHER, FLAT ... X.1... IL NO. 7	9006055	40
1		SPACER KEY PAD	B-MD-7413722-0	41
3"		WIRE #22 AWG (RED)	9107350-22	42
3"		WIRE #22 AWG (BLACK)	9107350-00	43
2		CONN., SOLDERLESS (RED)	9007970	44
1		SPACER, FIBER 4-40..250X.312LG	9007623	45
1		RETAINER, KEYBOARD ASSY	K-IA-7013177-0-0	46

QTY	REF. DESIGNATION	DESCRIPTION	PART NO.	ITEM NO.

PARTS LIST

DEC I.C. 8251	8	16
DEC I.C. 7490	10	5
DEC I.C. 74145	8	16
DEC I.C. 7495	8	14
DEC I.C. 9318	8	16
DEC I.C. 74123	8	16
IC TYPE	GND	+5V

GND AND 5V ARE USUALLY PIN 7 AND 14 RESPECTIVELY EXCEPTIONS ARE STATED ABOVE

IC PIN LOCATIONS

DEC NO.	EIA NO.	DEC NO.	EIA NO.

SEMICONDUCTOR CONVERSION CHART

REV.	CHANGE NO.	CHK	DATE	REVISIONS
B	ORIGINATED		20-OCT-76	P. SCANTLEBURY
C	5411241-00001		28 OCT 76	D. OLIVEIRA
D	5411241-00002		2-DEC-76	G. LORD
E	5411241-00003		7-DEC-76	G. LORD
F	5411241-00004		4-AUG-77	P. SCANTLEBURY
G	5411241-00005	H	12-DEC-77	P. SCANTLEBURY

FIRST USED ON OPTION MODEL	KC8AA
ETCH BOARD REV.	D

DRN.		DATE	12/6/74
CHK'D		DATE	1/23/75
ENG.		DATE	1/24/75
PROJ. ENG.		DATE	1/24/75
PROD.		DATE	1/27/77
NEXT HIGHER ASSY	D-AD7010644-0-0		
SCALE			
SHEET	1 OF 3		

digital

TITLE: INDICATOR DISPLAY

SIZE	CODE	NUMBER	REV.
D	CS	5411241-0-1	H

DIST.

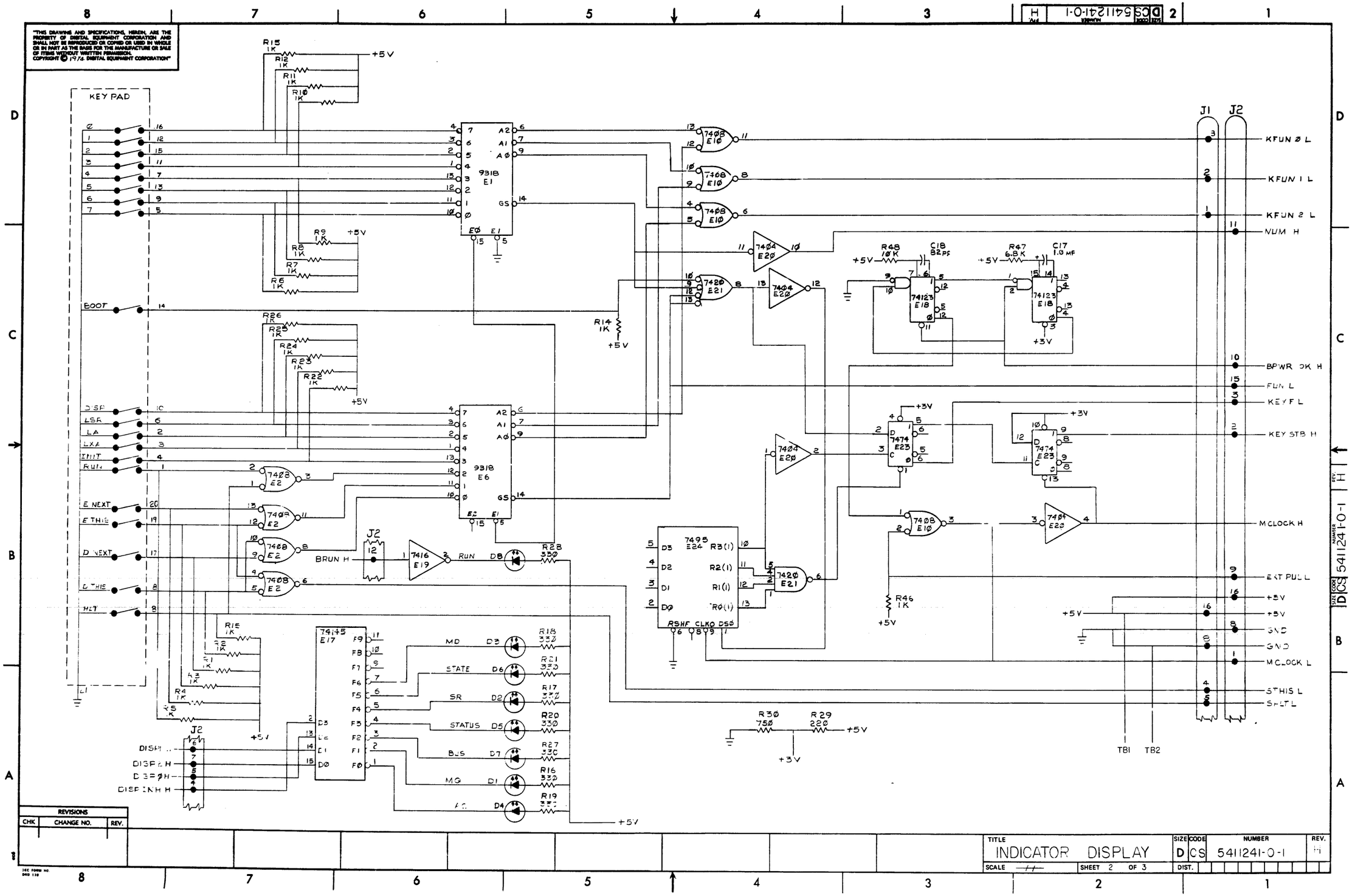
"THIS DRAWING AND SPECIFICATIONS, HEREIN, ARE THE PROPERTY OF DIGITAL EQUIPMENT CORPORATION AND SHALL NOT BE REPRODUCED OR COPIED OR USED IN WHOLE OR IN PART AS THE BASIS FOR THE MANUFACTURE OR SALE OF ITEMS WITHOUT WRITTEN PERMISSION. COPYRIGHT © 1974 DIGITAL EQUIPMENT CORPORATION"
KEY PAD
BOOT
DISP
LSR
LA
LXA
INIT
RUN
E NEXT
E THIS
D NEXT
D THIS
HLT
9318 E1
9318 E6
7408 E10
7404 E20
7420 E21
7423 E18
7474 E23
7495 E24
7416 E19
7408 E2
74145 E17
BRUN H
RUN
MD
STATE
SR
STATUS
BUS
MQ
AC
J1
J2
KFUN 0 L
KFUN 1 L
KFUN 2 L
NUM H
BPWR OK H
FUN L
KEY F L
KEY STB H
MCLOCK H
EXT PULL
+5V
GND
MCLOCK L
STHIS L
SHLT L
TB1
TB2
DISP1
DISP2 H
DISP0 H
DISP INH H
REVISIONS
CHK
CHANGE NO.
REV.
TITLE
INDICATOR DISPLAY
SIZE D
CODE CS
NUMBER 5411241-0-1
REV. H
SCALE
SHEET 2 OF 3
DIST.

"THIS DRAWING AND SPECIFICATIONS, HEREIN, ARE THE PROPERTY OF DIGITAL EQUIPMENT CORPORATION AND SHALL NOT BE REPRODUCED OR COPIED OR USED IN WHOLE OR IN PART AS THE BASIS FOR THE MANUFACTURE OR SALE OF ITEMS WITHOUT WRITTEN PERMISSION.
COPYRIGHT © 1974 DIGITAL EQUIPMENT CORPORATION"

J2
MPX A
MPX B

7490 E25
SET9
CLR
R5(1)
R2(1)
R1(1)
CLK0

8251 E22
D3
D2
D1
D0
F0
F1
F2
F3
F4
F5
F6
F7
F8
F9

M CLOCK H

7416 E19
R31 27
R32 470
R33 27
A05 Q1
R43 27
R44 470
R45 10
A05 Q5
R40 27
R41 470
R42 10
A05 Q4
R37 27
R39 470
R39 10
A05 Q3
R34 27
R35 470
R36 10
A05 Q2
+5V

J1

7447A E8
LT BI/RB RB
DISPLAY 2 H
DISPLAY 1 H
DISPLAY 0 H
+3V

7447A E16
BEMA 2 H
BEMA 1 H
BEMA 0 H

7447A E13
ADDR2 H
ADDR1 H
ADDR0 H

DISP3 E7
DISP2 E6
DISP1 E4
DISP0 E3
ADDR4 E15
ADDR3 E14
ADDR2 E12
ADDR1 E11
ADDR0 E9

REVISIONS		
CHK	CHANGE NO.	REV.

TITLE	SIZE	CODE	NUMBER	REV.
INDICATOR DISPLAY	D	CS	5411241-0-1	H
SCALE ---/---	SHEET 3 OF 3		DIST.	

DEC FORM NO. DRD 1.20

"THIS DRAWING AND SPECIFICATIONS, HEREIN, ARE THE PROPERTY OF DIGITAL EQUIPMENT CORPORATION AND SHALL NOT BE REPRODUCED OR COPIED OR USED IN WHOLE OR IN PART AS THE BASIS FOR THE MANUFACTURE OR SALE OF ITEMS WITHOUT WRITTEN PERMISSION.
COPYRIGHT ©1975 DIGITAL EQUIPMENT CORPORATION"

NOTES:

J1		J2	
GND	+5V	GND	+5V
B, D, F, J, L, N, E, T, V, X, Z, BB, DD, FF, JJ	LL, NN, RR, SS, TT, UU, VV	B, D, F, J, L, N, R, T, V, X, Z, BB, DD, FF, JJ	LL, NN, RR, TT, VV

1001610-00 MAY BE SUBSTITUTED FOR 1001610 TYPE 0.01uf CAP.

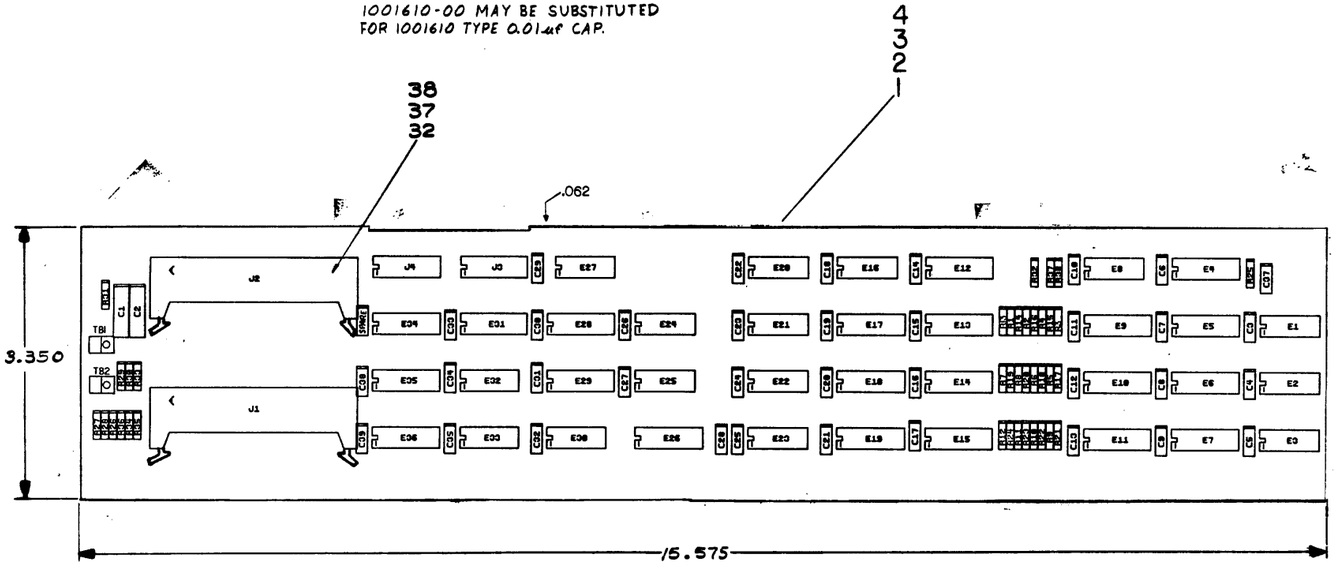

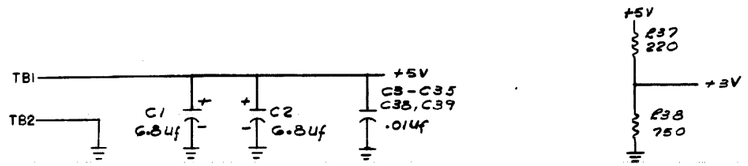

I.C DEC 74174	8	16
I.C DEC 7475	12	5
I.C DEC 8251	8	16
I.C DEC 8235	8	16
I.C DEC 74153	8	16
I.C DEC 74123	8	16
I.C DEC 74175	8	16
I.C DEC 8097	8	16
IC TYPE .	GND	+ 5V

GND AND 5V ARE USUALLY PIN 7 AND 14 RESPECTIVELY EXCEPTIONS ARE STATED ABOVE

IC PIN LOCATIONS

QTY	REF DESIGNATION	DESCRIPTION	PART NO.	ITEM NO.
REF		X-YCOORDINATE HOLE LOCATION	K-CO-5411316-0-1	1
REF		ASSY/DRILLING HOLE LAYOUT	D-AH-5411316-0-5	2
REF		MODULE ECO HISTORY	B-MH-5411316-0-6	3
1		ETCHED CIRCUIT BOARD	5011315	4
1	C37	CAP 56MMF 100V	1000012	5
35	C3 - C35, C38, C39	CAP .01 uf 100V 20 %	1001610-01	6
2	C1, C2	CAP 6.8 uf 35V	1005906	7
2	E16, E20	I.C DEC 7474	1905547	8
2	E8, E30	I.C DEC 7400	1905575	9
2	E22, E33	I.C DEC 7402	1909004	10
1	E26	I.C DEC 7475	1909050	11
3	E1, E2, E3	I.C DEC 7495	1909055	12
2	E29, E35	I.C DEC 8251	1909594	13
2	E24, E27	I.C DEC 7404	1909686	14
1	E23	I.C DEC 7416	1909928	15
3	E9, E10, E11	I.C DEC 8235	1909935	16
3	E17, E18, E19	I.C DEC 74153	1909937	17
1	E32	I.C DEC 7408	1910155	18
1	E4	I.C DEC 74123	1910436	19
3	E5, E6, E7	I.C DEC 74175	1910651	20
5	E12, E13, E14, E15, E36	I.C DEC 74174	1910652	21
2	E21, E25	I.C DEC 7427	1910878	22
3	E28, E31, E34	I.C DEC 8097	1911527	23
12	R5 - R16	RES 330 1/4W 5%	1300295	24
1	R37	RES 220 1/4W 5%	1300271	25
2	R27, R30	RES 390 1/4W 5%	1300309	26
7	R28, R31 - R36	RES 1K 1/4W 5%	1300365	27
2	R26, R29	RES 180 1/4W 5%	1301322	28
1	R38	RES 750 1/4W 5%	1301401	29
1	R25	RES 6.5K 1/4W 5%	1301423	30
12	R1 - R4, R17 - R24	RES 680 1/4W 5%	1301424	31
2	J1, J2	CONN 40 PIN	1209941-02	32
2	J3, J4	SOCKET I.C 16 PIN	1211313-02	33
N/R		WIRE, #30AWG, GREEN	9105740-55	34
2	TB1, TB2	TAB FASTON (OFFSET)	9007112	35
2	TB1, TB2	EYELET	9009000	36
2		LATCH, LEFT 40 P. RT. ANG. HD.	1209941-03	37
2		LATCH, RIGHT 40 P. RT. ANG. HD	1209941-04	38

PARTS LIST

ETCH BOARD REV | B. | C

FIRST USED ON OPTION MODEL: KC8-AA

REV	CHANGE NO.	CHK	ORIGINATED
B	5411316-00001		G. LORD 22-APR-76
C			
D	5411316-00002		G. LORD 5/6/75
E	5411316-00003		P. SCANTLEBURY 13-SEP-76
F	5411316-00004		P. SCANTLEBURY 27-SEP-76

DEC NO.	EIA NO.	DEC NO.	EIA NO.

SEMICONDUCTOR CONVERSION CHART

DRN: George Lapointe DATE 1/10/75
CHK'D: [illegible] DATE 1/15
ENG: [illegible] DATE 1/15/75
PROJ. ENG: [illegible] DATE 1/15/75
PROD: [illegible] DATE 1/22/75
NEXT HIGHER ASSY: D-AD-7010644-C-0
SCALE:
SHEET 1 OF 3

digital EQUIPMENT CORPORATION MAYNARD MASSACHUSETTS

TITLE: REGISTERS & CONTROL

SIZE D | CODE DCS | NUMBER 5411316-0-1 | REV. F

DIST.

DCS 5411316-0-1 F

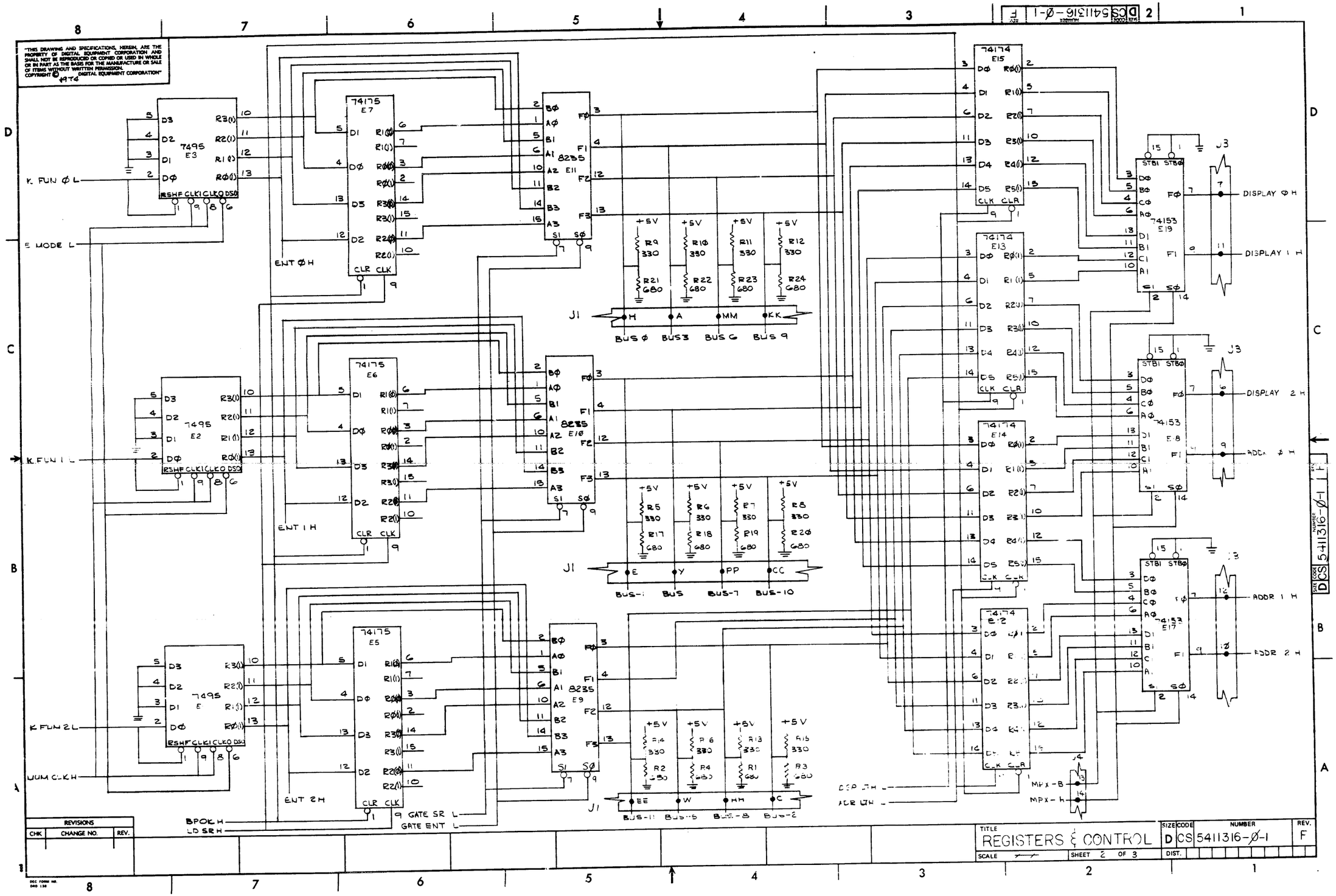

"THIS DRAWING AND SPECIFICATIONS, HEREIN, ARE THE PROPERTY OF DIGITAL EQUIPMENT CORPORATION AND SHALL NOT BE REPRODUCED OR COPIED OR USED IN WHOLE OR IN PART AS THE BASIS FOR THE MANUFACTURE OR SALE OF ITEMS WITHOUT WRITTEN PERMISSION. COPYRIGHT © 1974 DIGITAL EQUIPMENT CORPORATION"
K FUN Ø L
E MODE L
K FUN 1 L
K FUN 2 L
NUM CLK H
ENT Ø H
ENT 1 H
ENT 2 H
BPOK H
LD SR H
GATE SR L
GATE ENT L
DISPLAY Ø H
DISPLAY 1 H
DISPLAY 2 H
ADDR Ø H
ADDR 1 H
ADDR 2 H
MPX-B
MPX-H
BUS Ø
BUS 3
BUS 6
BUS 9
BUS-1
BUS
BUS-7
BUS-10
BUS-11
BUS-5
BUS-8
BUS-2
7495 E3
7495 E2
7495 E
74175 E7
74175 E6
74175 E5
8235 E11
8235 E10
8235 E9
74174 E15
74174 E13
74174 E14
74174 E12
74153 E19
74153 E18
74153 E17
J1
J3
J4
REVISIONS
CHK
CHANGE NO.
REV.
TITLE
REGISTERS & CONTROL
SIZE D
CODE CS
NUMBER 5411316-Ø-1
REV. F
SCALE
SHEET 2 OF 3
DIST.

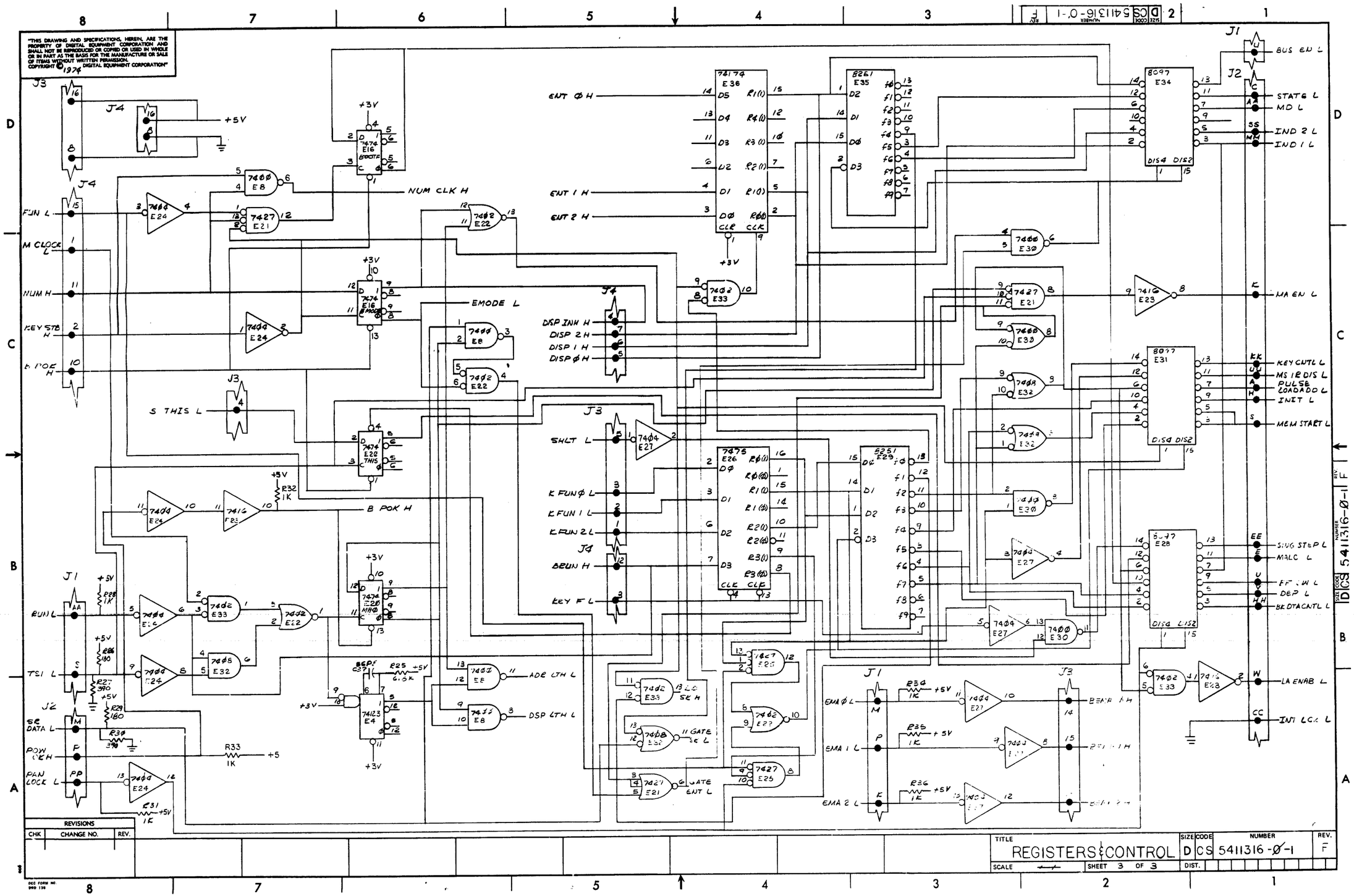
"THIS DRAWING AND SPECIFICATIONS, HEREIN, ARE THE PROPERTY OF DIGITAL EQUIPMENT CORPORATION AND SHALL NOT BE REPRODUCED OR COPIED OR USED IN WHOLE OR IN PART AS THE BASIS FOR THE MANUFACTURE OR SALE OF ITEMS WITHOUT WRITTEN PERMISSION. COPYRIGHT © 1974 DIGITAL EQUIPMENT CORPORATION"
REVISIONS
CHK
CHANGE NO.
REV.
TITLE
REGISTERS & CONTROL
SIZE D
CODE CS
NUMBER 5411316-Ø-1
REV. F
SCALE
SHEET 3 OF 3
DIST.
DEC FORM NO. DRD 138