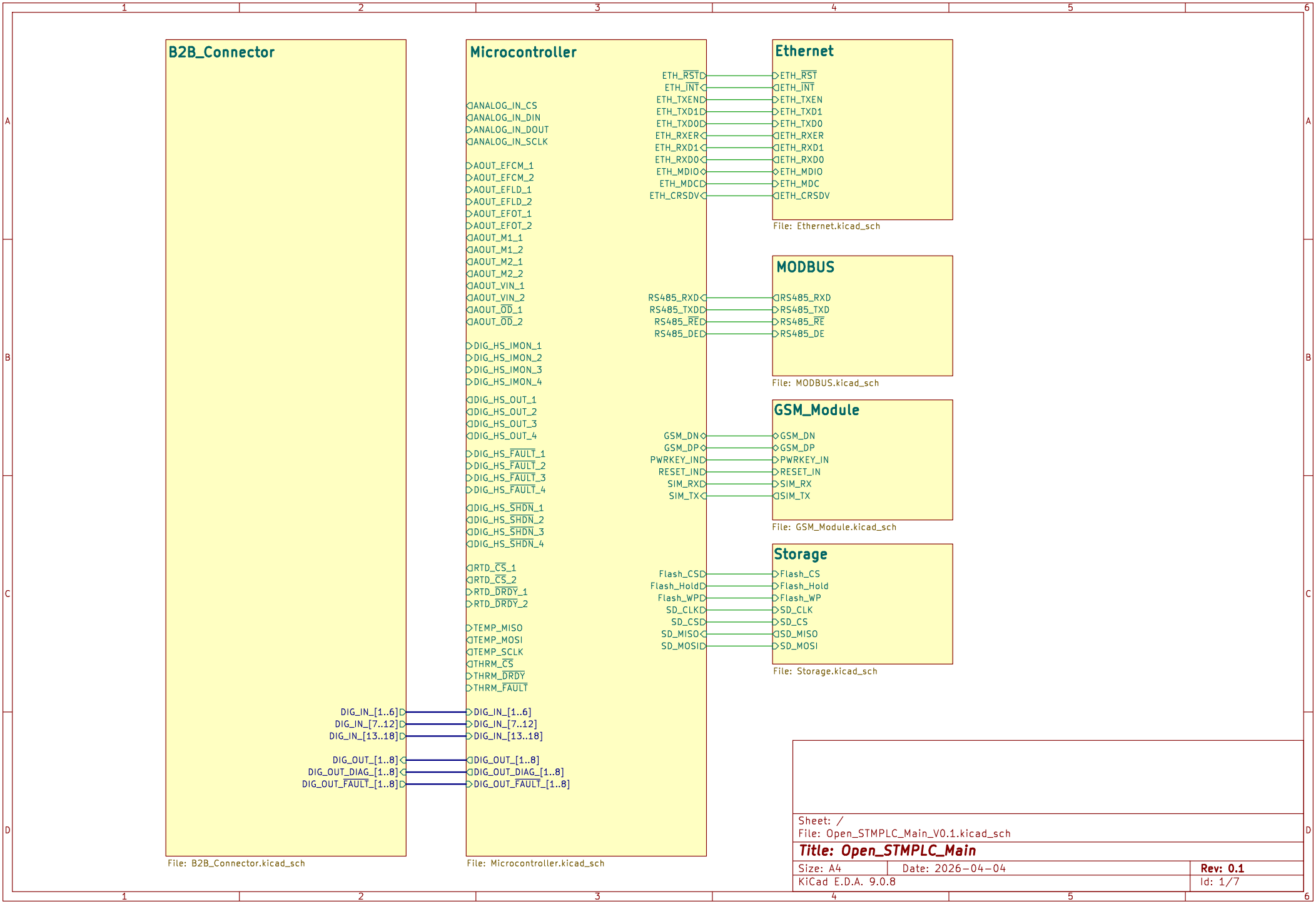

Sheet: /
File: Open_STMPLC_Main_V0.1.kicad_sch

Title: Open_STMPLC_Main

Size: A4	Date: 2026-04-04	Rev: 0.1
KiCad E.D.A. 9.0.8		Id: 1/7

MICROCONTROLLER

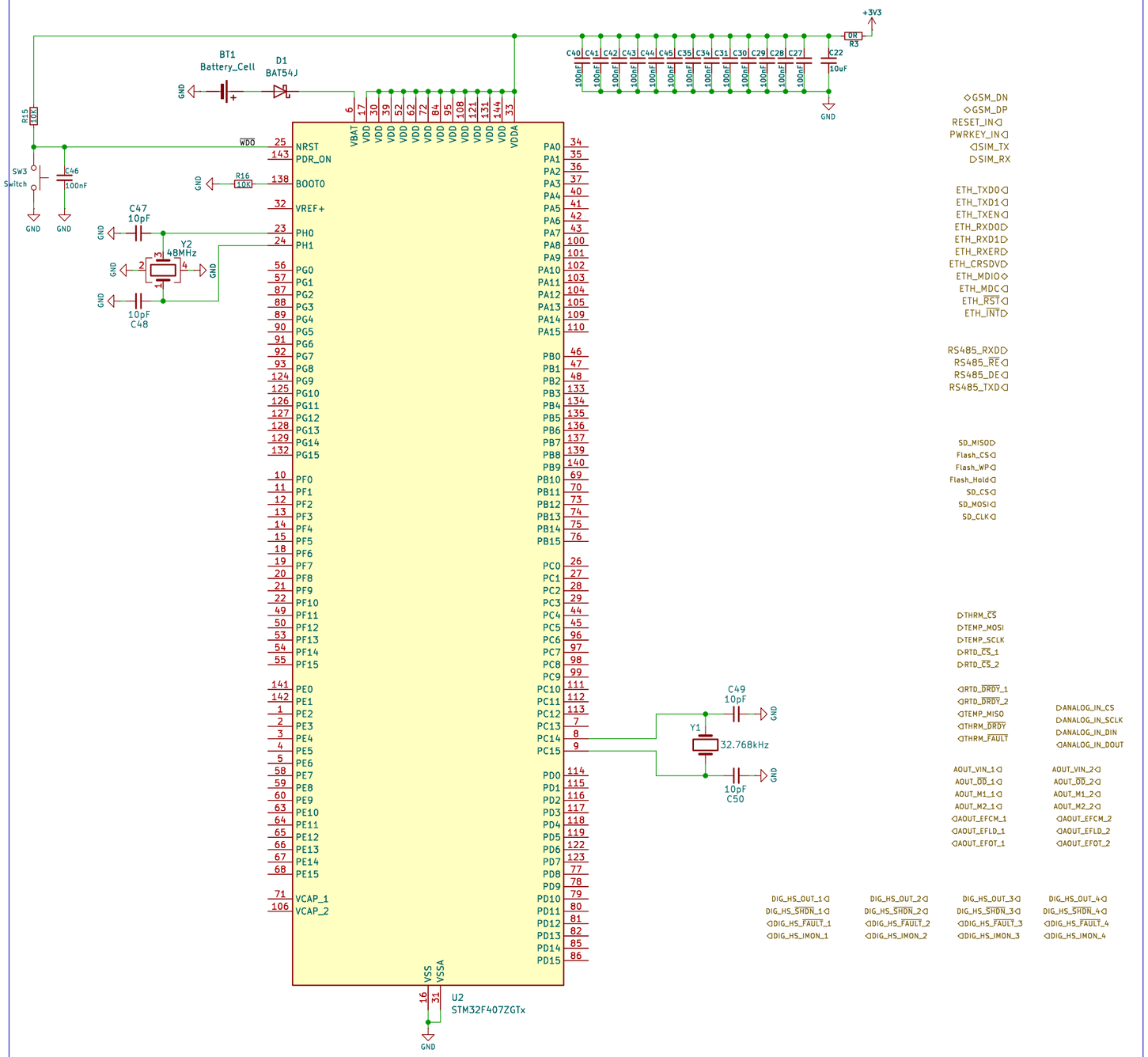

WATCHDOG

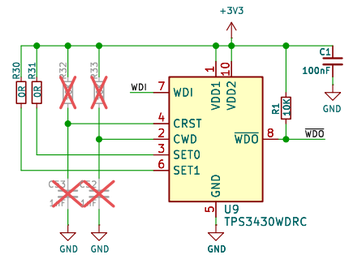

INDICATIONS

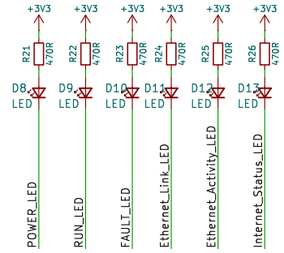

DEBUG

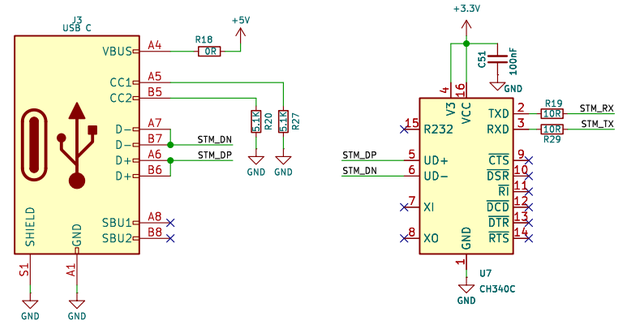

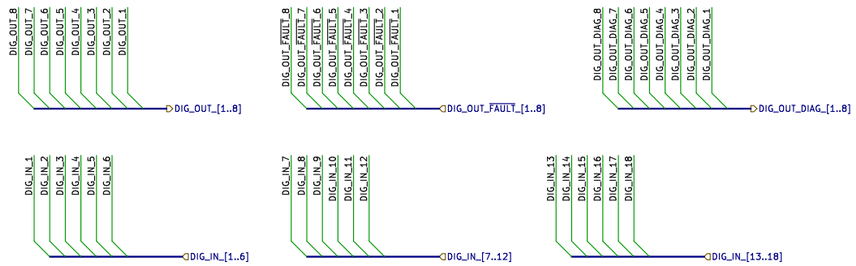

Sheet: /Microcontroller/
File: Microcontroller.kicad_sch

Title: Open_STMPLC_Main

Size: A3	Date: 2026-04-04	Rev: 0.1
KiCad E.D.A. 9.0.8		Id: 3/7

RS-485 MODBUS

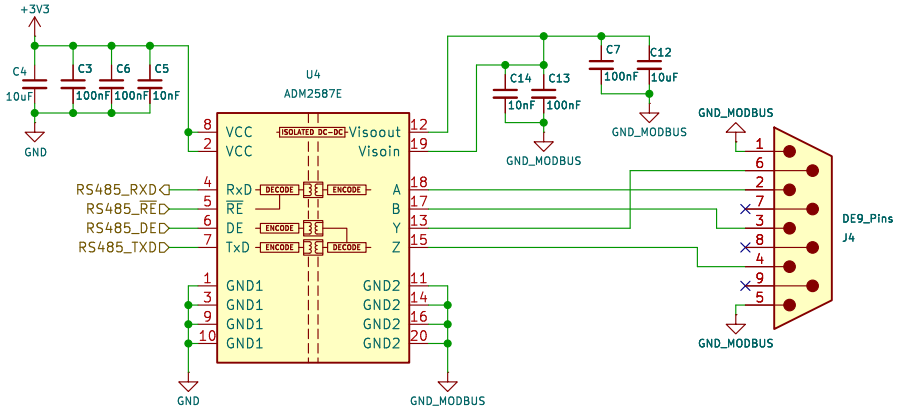

Sheet: /MODBUS/
File: MODBUS.kicad_sch

Title: Open_STMPLC_Main

Size: A4	Date: 2026-04-04	Rev: 0.1
KiCad E.D.A. 9.0.8		Id: 3/7

MicroSD

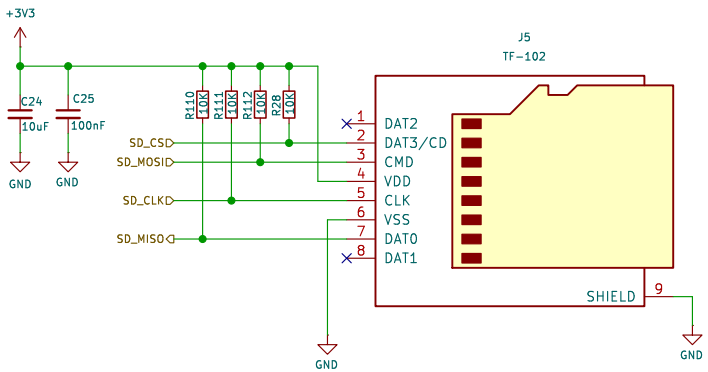

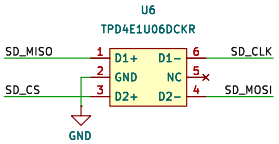

Flash Memory

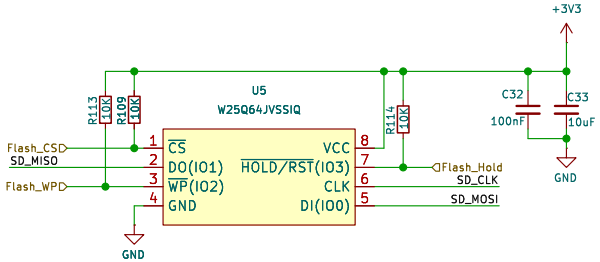

Sheet: /Storage/
File: Storage.kicad_sch

Title: Open_STMPLC_Main

Size: A4	Date: 2026-04-04	Rev: 0.1
KiCad E.D.A. 9.0.8		Id: 4/7

ETHERNET

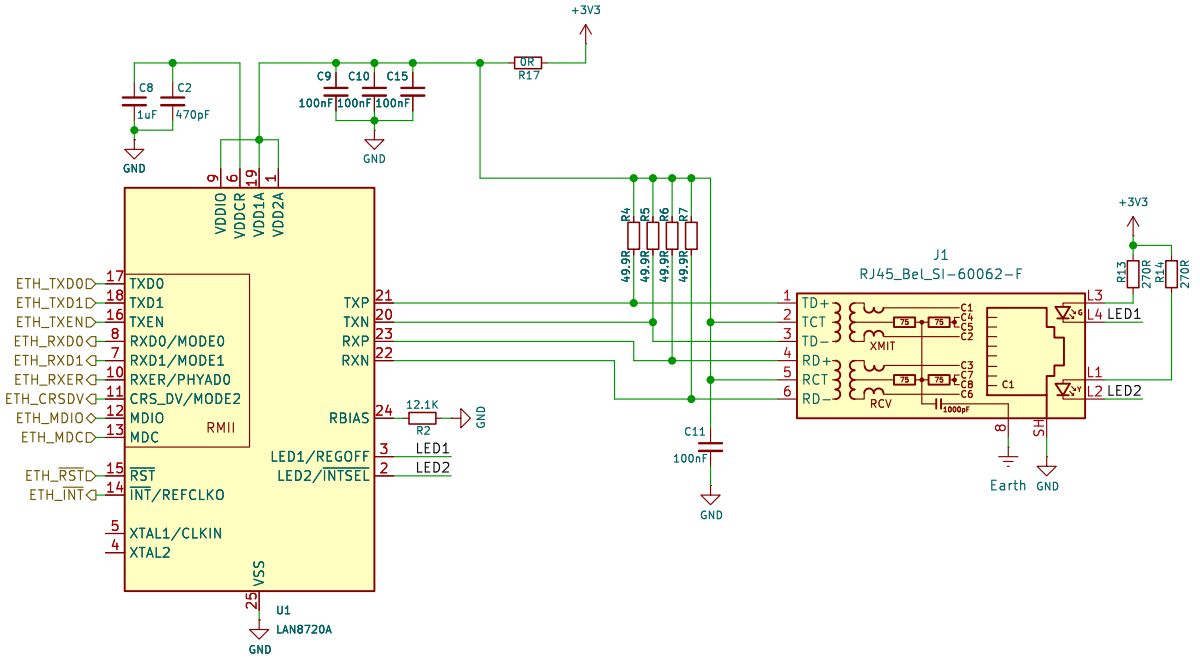

Sheet: /Ethernet/
File: Ethernet.kicad_sch

Title: Open_STMPLC_Main

Size: A4	Date: 2026-04-04	Rev: 0.1
KiCad E.D.A. 9.0.8		Id: 5/7

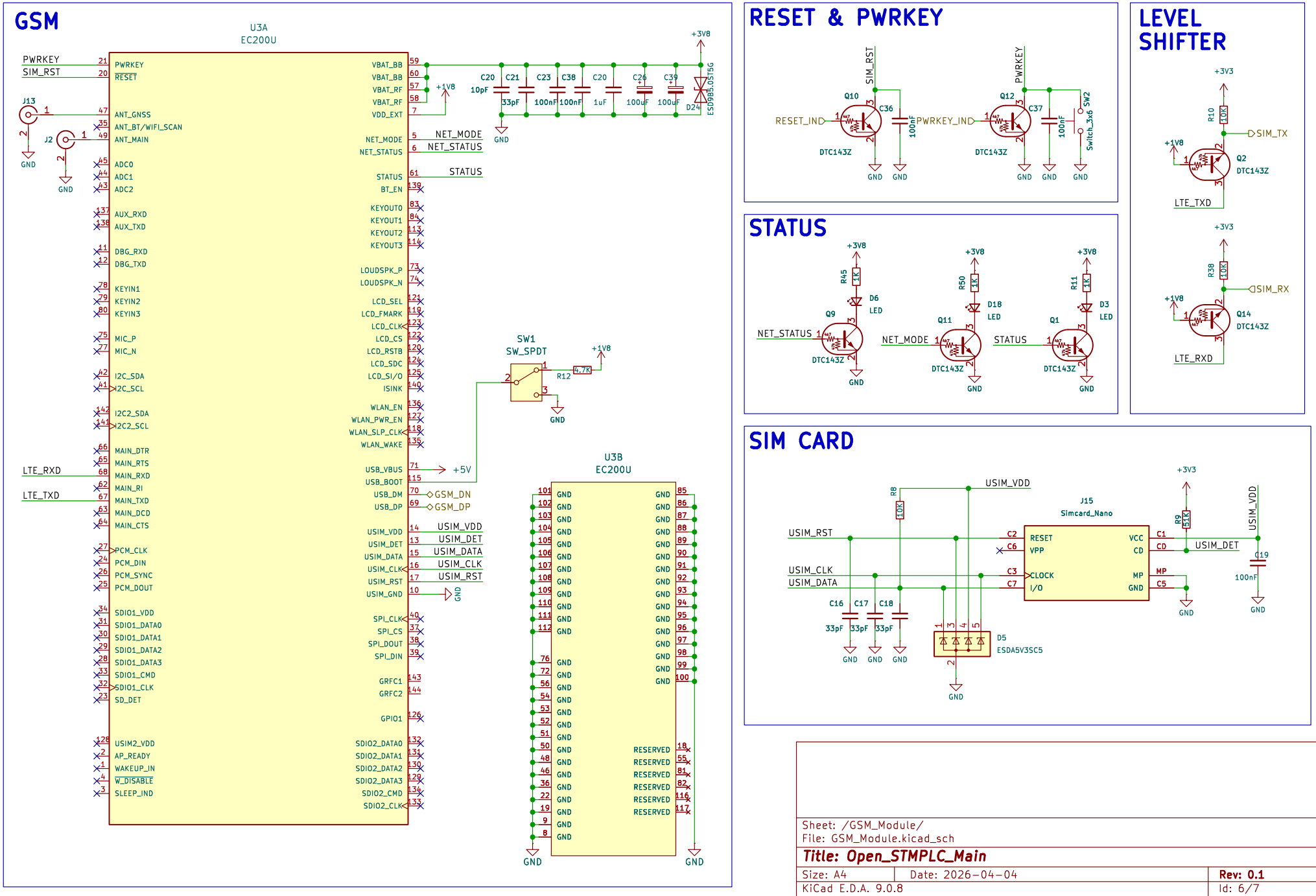
GSM
U3A
EC200U
PWRKEY
SIM_RST
ANT_GNSS
ANT_BT/WIFI_SCAN
ANT_MAIN
ADC0
ADC1
ADC2
AUX_RXD
AUX_TXD
DBG_RXD
DBG_TXD
KEYIN1
KEYIN2
KEYIN3
MIC_P
MIC_N
I2C_SDA
I2C_SCL
I2C2_SDA
I2C2_SCL
MAIN_DTR
MAIN_RTS
MAIN_RXD
MAIN_RI
MAIN_TXD
MAIN_DCD
MAIN_CTS
LTE_RXD
LTE_TXD
PCM_CLK
PCM_DIN
PCM_SYNC
PCM_DOUT
SDIO1_VDD
SDIO1_DATA0
SDIO1_DATA1
SDIO1_DATA2
SDIO1_DATA3
SDIO1_CMD
SDIO1_CLK
SD_DET
USIM2_VDD
AP_READY
WAKEUP_IN
W_DISABLE
SLEEP_IND
VBAT_BB
VBAT_RF
VDD_EXT
NET_MODE
NET_STATUS
STATUS
BT_EN
KEYOUT0
KEYOUT1
KEYOUT2
KEYOUT3
LOUDSPK_P
LOUDSPK_N
LCD_SEL
LCD_FMARK
LCD_CLK
LCD_CS
LCD_RSTB
LCD_SDC
LCD_SI/O
ISINK
WLAN_EN
WLAN_PWR_EN
WLAN_SLP_CLK
WLAN_WAKE
USB_VBUS
USB_BOOT
USB_DM
USB_DP
USIM_VDD
USIM_DET
USIM_DATA
USIM_CLK
USIM_RST
USIM_GND
SPI_CLK
SPI_CS
SPI_DOUT
SPI_DIN
GRFC1
GRFC2
GPIO1
SDIO2_DATA0
SDIO2_DATA1
SDIO2_DATA2
SDIO2_DATA3
SDIO2_CMD
SDIO2_CLK
+5V
GSM_DN
GSM_DP
J13
J2
GND
+3V8
+1V8
C20 10pF
C21 33pF
C23 100nF
C38 100nF
C20 1uF
C26 100uF
C39 100uF
D24 ESD9B5.0S15G
SW1
SW_SPDT
R12 4.7K
U3B
EC200U
RESERVED
RESET & PWRKEY
SIM_RST
PWRKEY
Q10
Q12
C36 100nF
C37 100nF
RESET_IND
PWRKEY_IND
DTC143Z
SW2 Switch_3x6
LEVEL SHIFTER
+3V3
R10 10K
SIM_TX
Q2 DTC143Z
LTE_TXD
R38 10K
SIM_RX
Q14 DTC143Z
LTE_RXD
STATUS
R45 1K
D6 LED
Q9
NET_STATUS
R50 1K
D18 LED
Q11
NET_MODE
R11 1K
D3 LED
Q1
STATUS
SIM CARD
USIM_VDD
R8 10K
J15
Simcard_Nano
USIM_RST
USIM_CLK
USIM_DATA
RESET
VPP
CLOCK
I/O
VCC
CD
MP
GND
USIM_DET
R9 51K
C19 100nF
C16 33pF
C17 33pF
C18 33pF
D5 ESDA5V3SC5
Sheet: /GSM_Module/
File: GSM_Module.kicad_sch
Title: Open_STMPLC_Main
Size: A4
Date: 2026-04-04
Rev: 0.1
KiCad E.D.A. 9.0.8
Id: 6/7

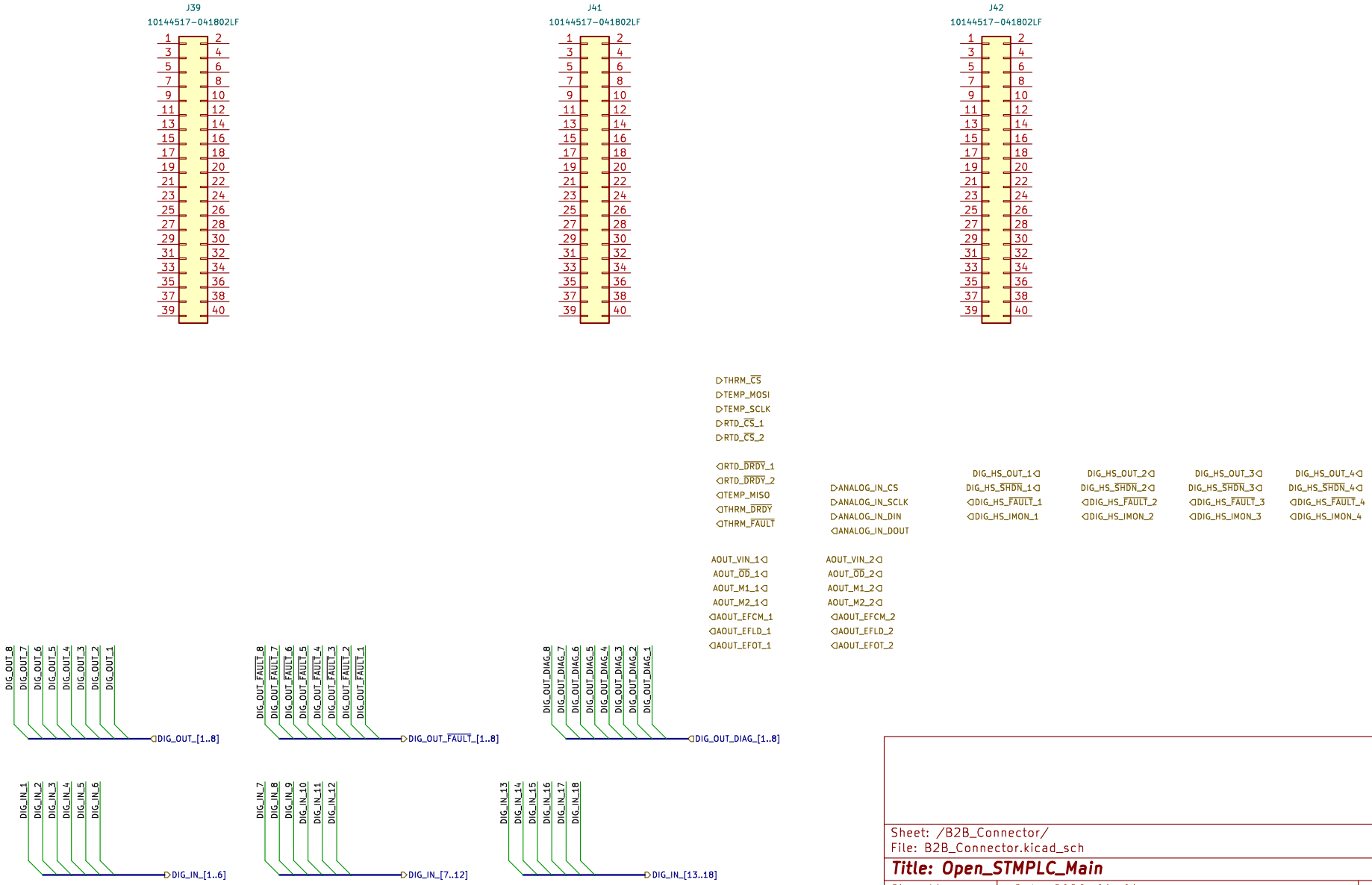

Sheet: /B2B_Connector/
File: B2B_Connector.kicad_sch

Title: Open_STMPLC_Main

Size: A4	Date: 2026-04-04	**Rev: 0.1**
KiCad E.D.A. 9.0.8		Id: 7/7