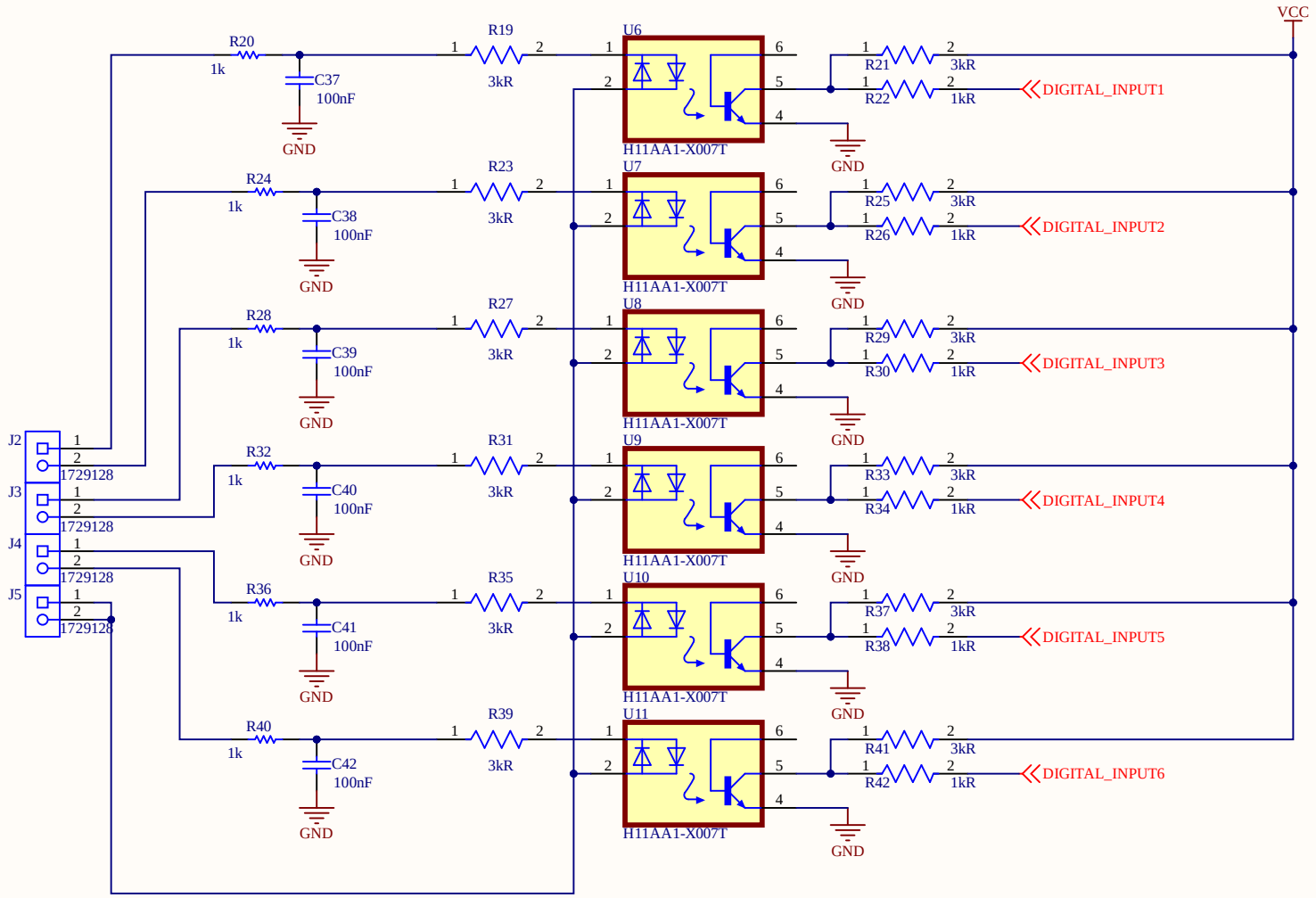

Title		
Size A4	Number	Revision
Date: 11/15/2025		Sheet of
File: D:\Thinglista\..\Digital_Input.SchDoc		Drawn By:

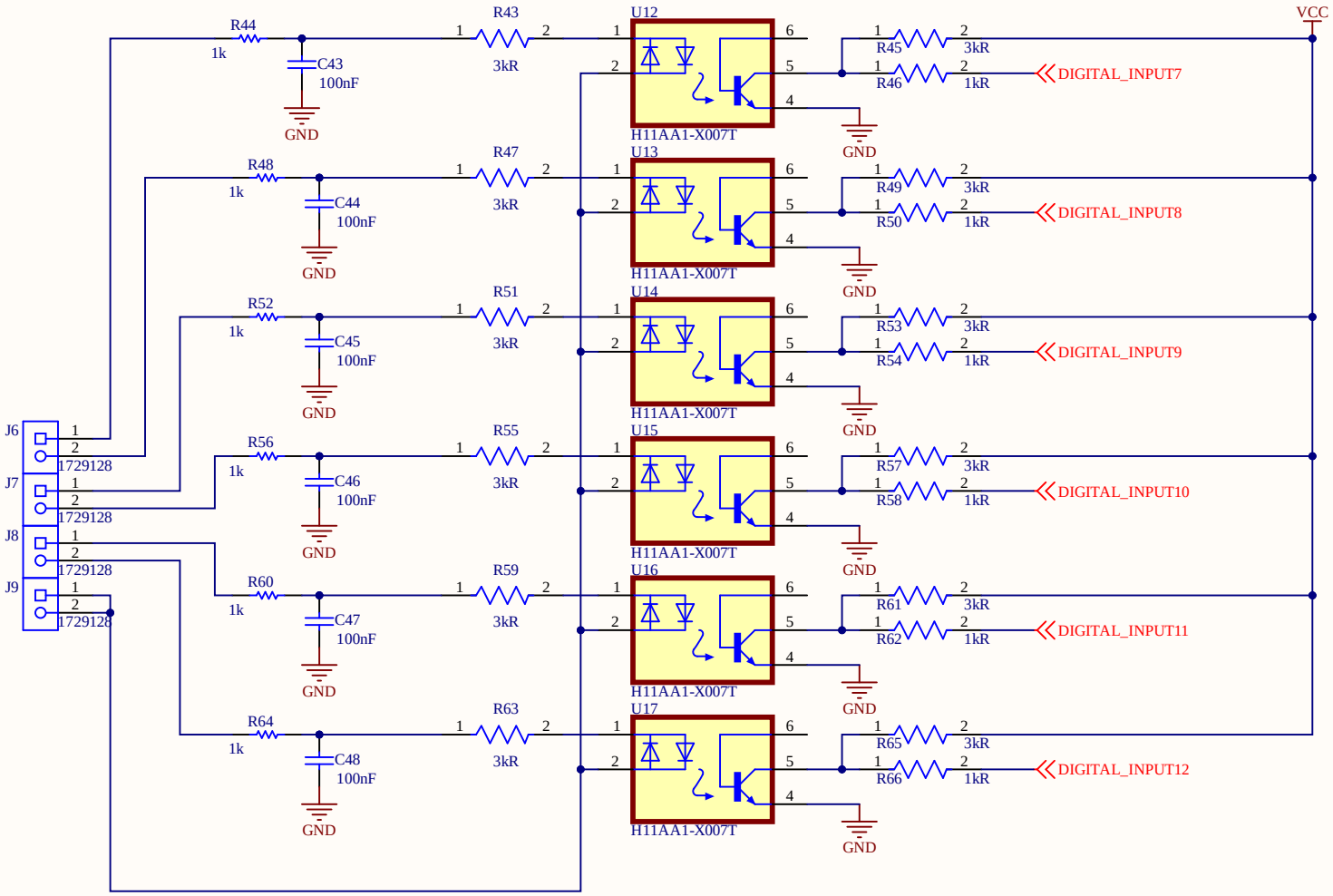

Title		
Size A4	Number	Revision
Date: 11/15/2025		Sheet of
File: D:\Thinglista\..\Digital_Input2.SchDoc		Drawn By:

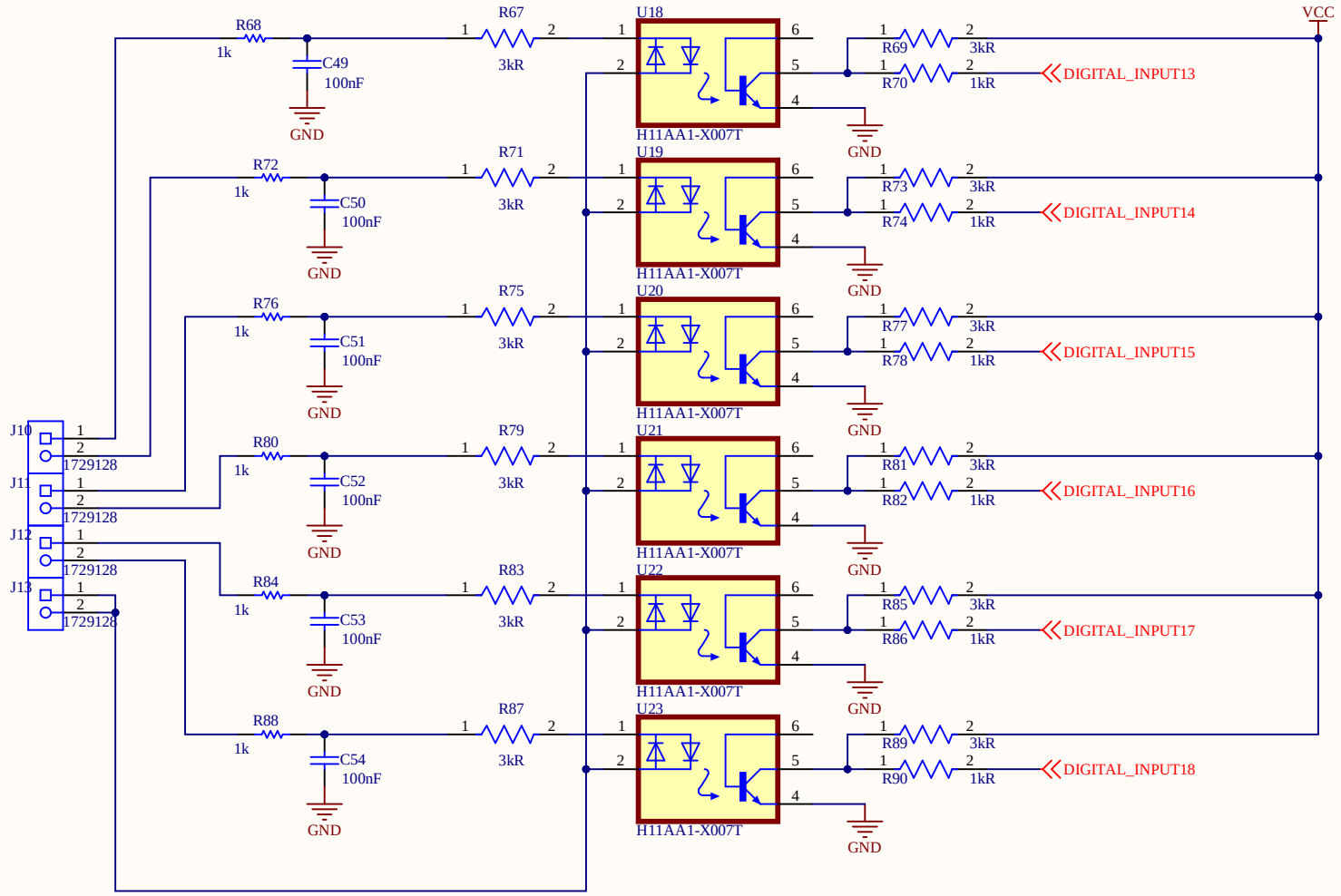

Title		
Size A4	Number	Revision
Date: 11/15/2025		Sheet of
File: D:\Thinglista\..\Digital_Input3.SchDoc		Drawn By:

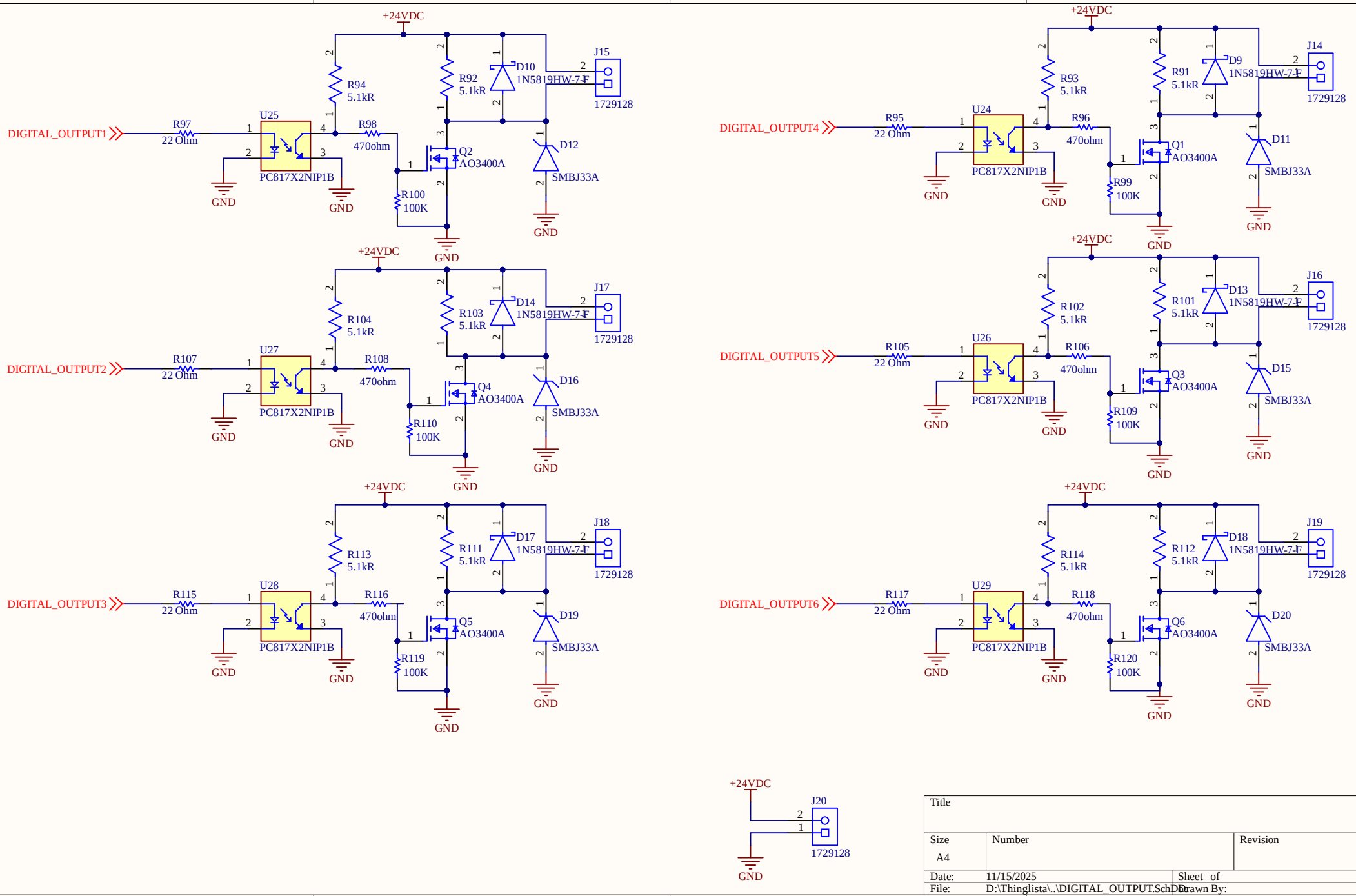
+24VDC
DIGITAL_OUTPUT1
R97
22 Ohm
U25
PC817X2NIP1B
R94
5.1kR
R98
470ohm
R92
5.1kR
D10
1N5819HW-7-F
J15
1729128
Q2
AO3400A
R100
100K
D12
SMBJ33A
GND
DIGITAL_OUTPUT2
R107
22 Ohm
U27
R104
5.1kR
R108
470ohm
R103
5.1kR
D14
1N5819HW-7-F
J17
Q4
AO3400A
R110
100K
D16
DIGITAL_OUTPUT3
R115
22 Ohm
U28
R113
5.1kR
R116
470ohm
R111
5.1kR
D17
1N5819HW-7-F
J18
Q5
AO3400A
R119
100K
D19
DIGITAL_OUTPUT4
R95
22 Ohm
U24
R93
5.1kR
R96
470ohm
R91
5.1kR
D9
1N5819HW-7-F
J14
Q1
AO3400A
R99
100K
D11
DIGITAL_OUTPUT5
R105
22 Ohm
U26
R102
5.1kR
R106
470ohm
R101
5.1kR
D13
1N5819HW-7-F
J16
Q3
AO3400A
R109
100K
D15
DIGITAL_OUTPUT6
R117
22 Ohm
U29
R114
5.1kR
R118
470ohm
R112
5.1kR
D18
1N5819HW-7-F
J19
Q6
AO3400A
R120
100K
D20
J20
Title
Size
A4
Number
Revision
Date: 11/15/2025
Sheet of
File: D:\Thinglista\..\DIGITAL_OUTPUT.SchDoc
Drawn By:

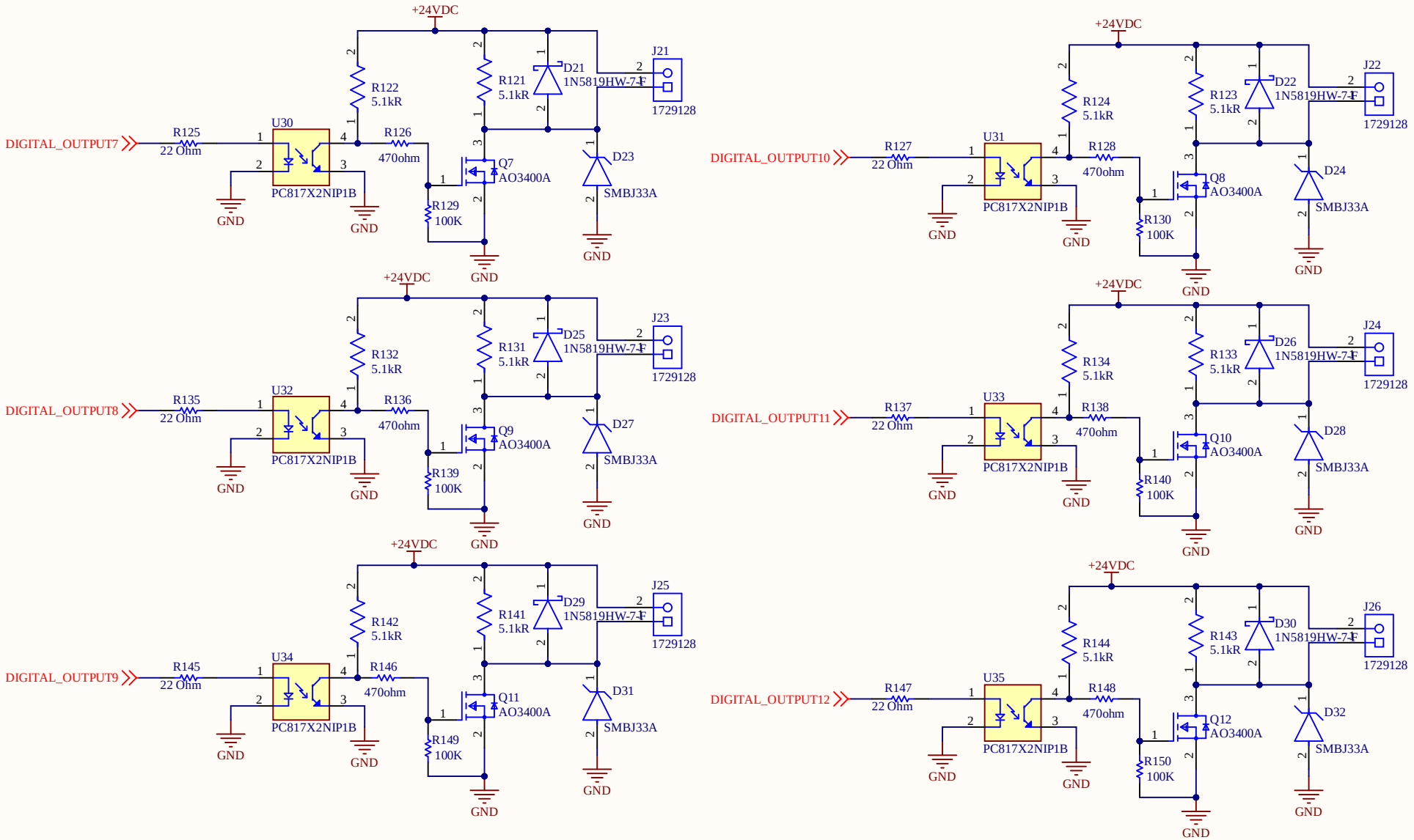

Title		
Size A4	Number	Revision
Date: 11/15/2025	Sheet of	
File: D:\Thinglista\..\DIGITAL_OUTPUT1.SchDoc	Drawn By:	

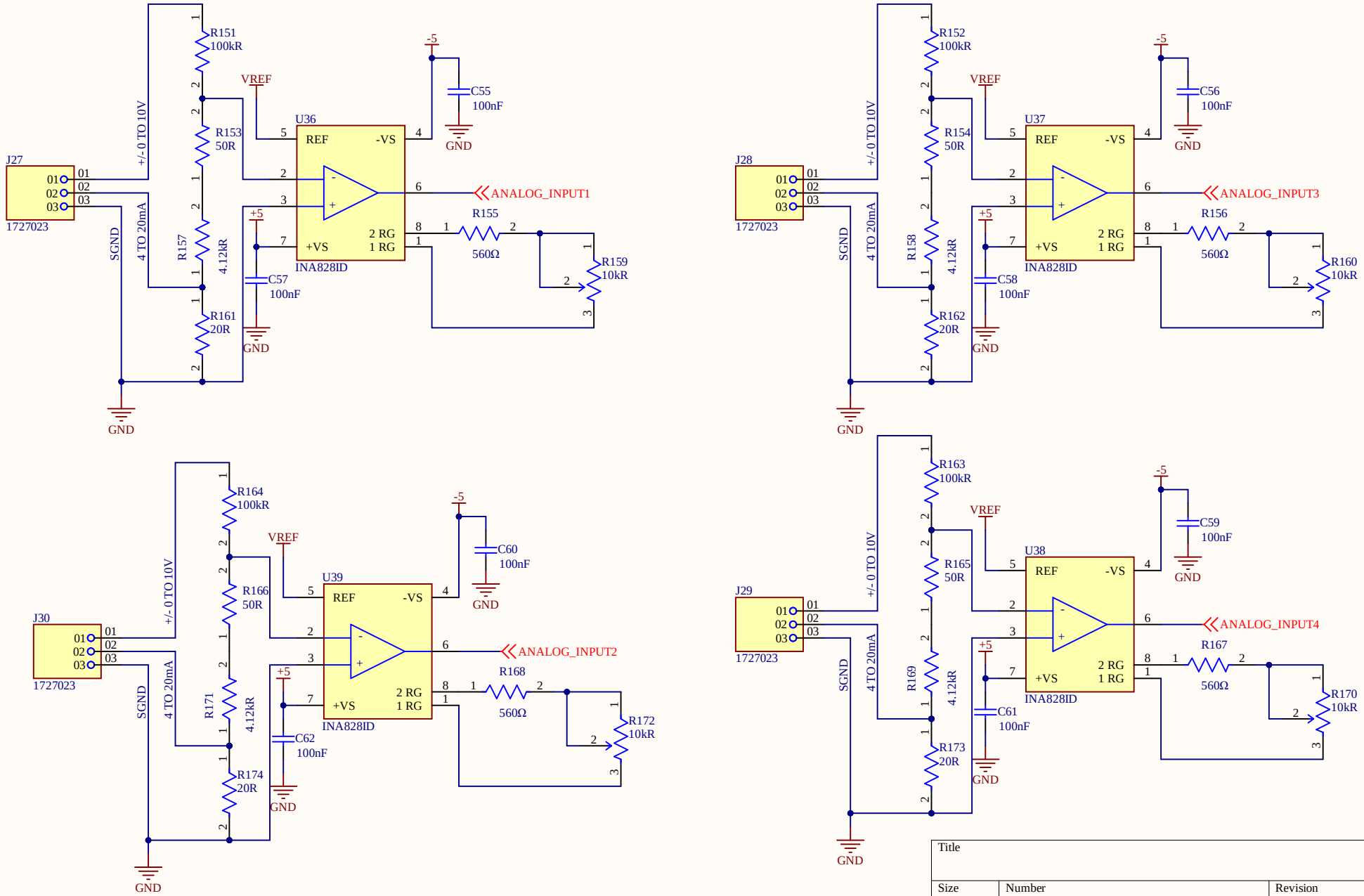

Title		
Size A4	Number	Revision
Date: 11/15/2025		Sheet of
File: C:\Users\..\ANALOG_INPUT.SchDoc		Drawn By:

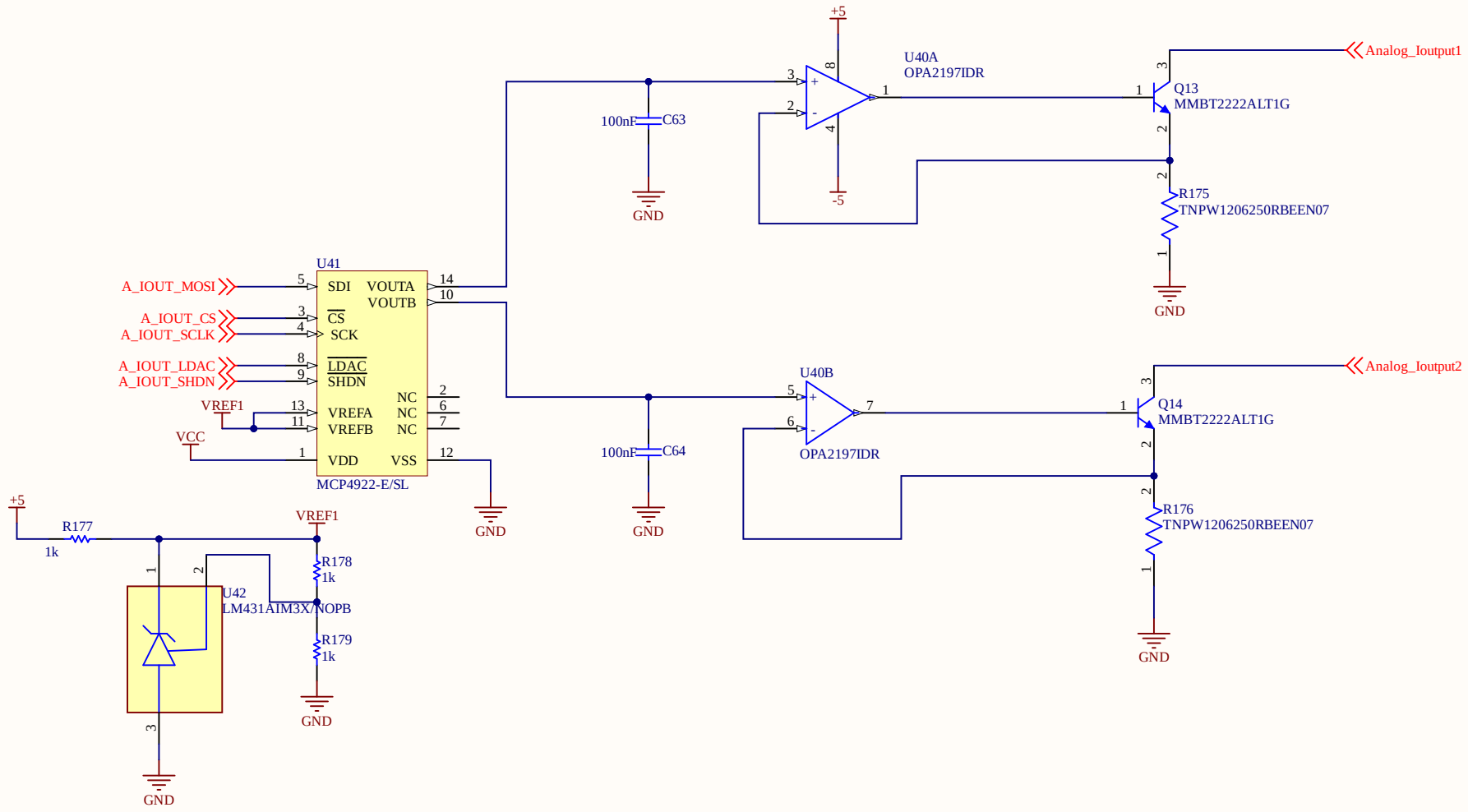

Title		
Size A4	Number	Revision
Date: 11/15/2025	Sheet of	
File: D:\Thinglista\..\ANALOG_IOUTPUT.SchDoc	Drawn By:	

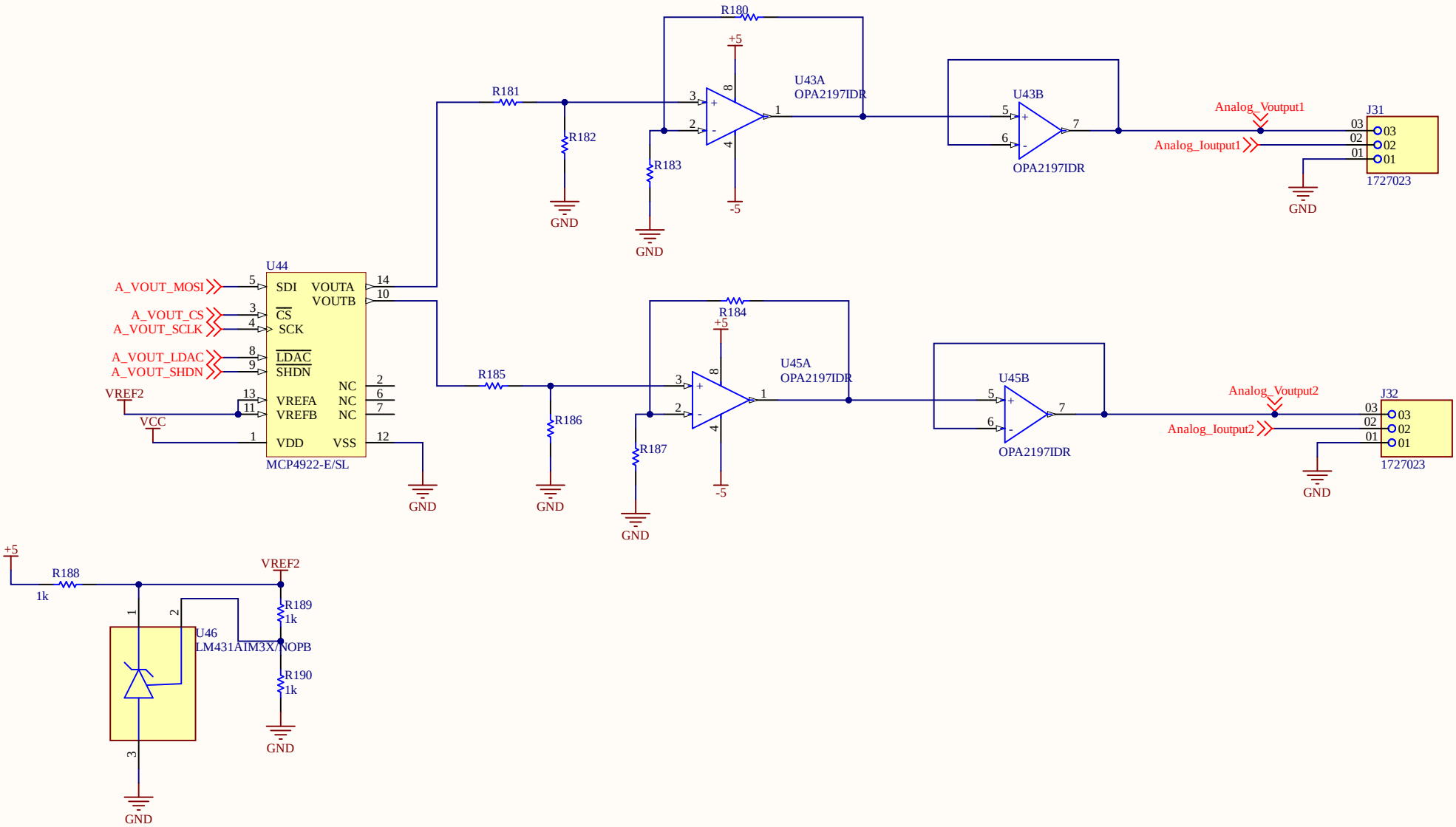

Title		
Size A4	Number	Revision
Date: 11/15/2025	Sheet of	
File: D:\Thinglista\..\ANALOG_VOUTPUT.SchDoc	Drawn By:	

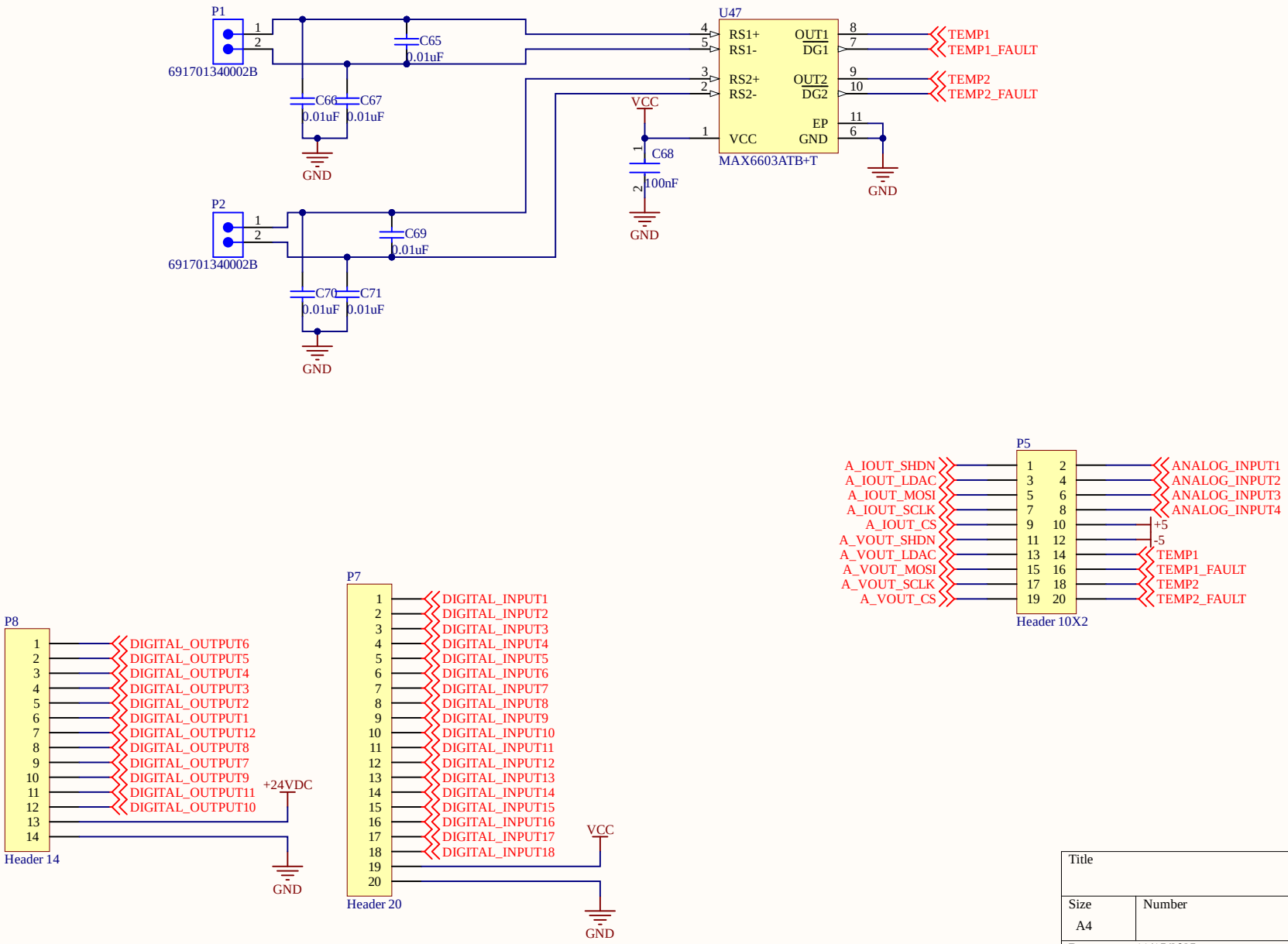

Title		
Size A4	Number	Revision
Date: 11/15/2025	Sheet of	
File: D:\Thinglista\..\Temp_sensors Input.SchDoc	Drawn By:	

Comment	Description	Designator	Footprint	LibRef	Quantity
C0603T104K3RACTU		C37, C38, C39, C40, C41, C42, C43, C44, C45, C46, C47, C48, C49, C50, C51, C52, C53, C54	CAPC1608X87X35NL15T15	CMP-2006-03843-1	18
GRM188R71H104KA93D	Chip Capacitor, 0.1 uF, +/- 10%, 50 V, -55 to 125 degC, 0603 (1608 Metric), RoHS, Tape and Reel	C55, C56, C57, C58, C59, C60, C61, C62	CAPC1608X90X35ML10T15	CMP-2100-03643-1	8
GRM21BR71H104KA01L	Chip Capacitor, 0.1 uF, +/- 10%, 50 V, -55 to 125 degC, 0805 (2012 Metric), RoHS, Tape and Reel	C63, C64	CAPC2013X135X45ML10T25	CMP-2100-03644-1	2
VJ0603Y103KXAAP		C65, C66, C67, C69, C70, C71	CAPC1608X92X38ML15T08	CMP-2006-01149-1	6
08051C104K4T2A	Automotive Ceramic Capacitor, 0805, 100nF, 10%, X7R, 15%, 100V	C68	FP-0805-L_2_01_0_2-W_1_25-IPC_B	CMP-2007-04172-2	1
1N5819HW-7-F	DIODE SCHOTTKY 40V 1A SOD123	D9, D10, D13, D14, D17, D18, D21, D22, D25, D26, D29, D30	FP-SOD123-IPC_A	CMP-0303-00003-3	12
SMBJ33A	TVS DIODE 33V 53.3V DO214AA	D11, D12, D15, D16, D19, D20, D23, D24, D27, D28, D31, D32	FP-SMBJ-MFG	CMP-2000-07095-2	12
1729128	PCB Terminal Block, 13.5 A, 400 V, 2-Pin THD, RoHS, Bulk	J2, J3, J4, J5, J6, J7, J8, J9, J10, J11, J12, J13, J14, J15, J16, J17, J18, J19, J20, J21, J22, J23, J24, J25, J26	PHOE-1729128-2_V	CMP-2000-05815-1	25
1727023	PCB Terminal Screw 3.81mm 16AWG 200V 13.5A 3 Position COMBICON MKDS Series | Phoenix Contact 1727023	J27, J28, J29, J30, J31, J32	PHOENIX_1727023	1727023	6
691701340002B		P1, P2	691701340002B	CMP-1502-02003-2	2
Header 10X2	Header, 10-Pin, Dual row	P5	HDR2X10	Header 10X2	1
Header 20	Header, 20-Pin	P7	HDR1X20	Header 20	1
Header 14	Header, 14-Pin	P8	HDR1X14	Header 14	1
AO3400A	MOSFET N-CH 30V 5.7A SOT23	Q1, Q2, Q3, Q4, Q5, Q6, Q7, Q8, Q9, Q10, Q11, Q12	FP-SOT23-MFG	CMP-83955-000006-1	12
MMBT2222ALT1G	General Purpose Transistor, NPN Silicon, 3-Pin SOT-23, Pb-Free, Tape and Reel	Q13, Q14	ONSC-SOT-23-3-318-08_V	CMP-1048-00538-1	2
CRCW06033K00FKEA	RES Thick Film, 3kΩ, 1%, 0.1W, 100ppm/°C, 0603	R19, R21, R23, R25, R27, R29, R31, R33, R35, R37, R39, R41, R43, R45, R47, R49, R51, R53, R55, R57, R59, R61, R63, R65, R67, R69, R71, R73, R75, R77, R79, R81, R83, R85, R87, R89	FP-CRCW0603-e3-IPC_A	CMP-2000-03293-2	36
RT0603DRE071KL		R20, R24, R28, R32, R36, R40, R44, R48, R52, R56, R60, R64, R68, R72, R76, R80, R84, R88	RESC1608X55X25LL10T15	CMP-2000-04615-1	18
RC0603FR-071KL	RES 1K OHM 1% 1/10W 0603	R22, R26, R30, R34, R38, R42, R46, R50, R54, R58, R62, R66, R70, R74, R78, R82, R86, R90	FP-RC0603-0_55-IPC_C	CMP-1659-00009-5	18
CRCW06035K10FKEA	RES Thick Film, 5.1kΩ, 1%, 0.1W, 100ppm/°C, 0603	R91, R92, R93, R94, R101, R102, R103, R104, R111, R112, R113, R114, R121, R122, R123, R124, R131, R132, R133, R134, R141, R142, R143, R144	FP-CRCW0603-e3-IPC_C	CMP-1012-00590-3	24
ERJ-3EKF2200V	Chip Resistor, 220 Ohm, +/- 1%, 0.1 W, -55 to 155 degC, 0603 (1608 Metric), RoHS, Tape and Reel	R95, R97, R105, R107, R115, R117, R125, R127, R135, R137, R145, R147	RESC1608X55X30LL15T15	CMP-2000-00335-2	12
RC0805FR-07470RL	Chip Resistor, 470 Ohm, +/- 1%, 125 mW, -55 to 155 degC, 0805 (2012 Metric), RoHS, Tape and Reel	R96, R98, R106, R108, R116, R118, R126, R128, R136, R138, R146, R148	RESC2013X60X35LL10T20	CMP-2000-06961-1	12
CRCW0805100KJNEA		R99, R100, R109, R110, R119, R120, R129, R130, R139, R140, R149, R150	RESC2013X50X30ML20T20	CMP-2001-04900-1	12
RC0603FR-07100KL	RES SMD 100K OHM 1% 1/10W 0603	R151, R152, R163, R164	FP-RC0603-0_55-MFG	CMP-2100-03662-2	4
CRCW060350R0FKEA	RES Thick Film, 50Ω, 1%, 0.1W, 100ppm/°C, 0603	R153, R154, R165, R166	FP-CRCW0603-e3-IPC_A	CMP-2000-03436-2	4
RT0603DRE07560RL	RES SMD 560 OHM 0.5% 1/10W 0603	R155, R156, R167, R168	FP-RT0603-MFG	CMP-03412-031629-1	4
CRCW06034K12FKEA	RES Thick Film, 4.12kΩ, 1%, 0.1W, 100ppm/°C, 0603	R157, R158, R169, R171	FP-CRCW0603-e3-IPC_B	CMP-2000-03403-2	4
3296Y-1-103LF	TRIMMER 10K OHM 0.5W PC PIN TOP	R159, R160, R170, R172	FP-3296Y-MFG	CMP-07234-000015-2	4
CRCW060320R0FKEAHP	RES Thick Film, 20Ω, 1%, 0.33W, 100ppm/°C, 0603	R161, R162, R173, R174	FP-CRCW0603-HPe3-IPC_B	CMP-2000-03074-2	4
TNPW1206250RBEEN07	Res Thnfilm 1206 250R Ohm 0.1% 1/4W 25PPM/C SMD	R175, R176	FP-TNPW1206-e3-MFG	CMP-02407-012799-1	2
CRCW08051K00FKTC		R177, R178, R179, R188, R189, R190	RESC2013X50X30NL20T20	CMP-2001-04268-1	6
CRCW060310K0FKEA	Chip Resistor, 10 KOhm, +/- 1%, 100 mW, -55 to 155 degC, 0603 (1608 Metric), RoHS, Tape and Reel	R180, R181, R182, R183, R184, R185, R186, R187	RESC1609X50X30NL8T20	CMP-1666-00005-4	8
H11AA1-X007T	H11AA1 Series Single Channel 30V 5300 Vrms SMT Phototransistor Optocoupler DIP-6	U6, U7, U8, U9, U10, U11, U12, U13, U14, U15, U16, U17, U18, U19, U20, U21, U22, U23	SOIC254P1030X460-6N	H11AA1-X007T	18
PC817X2NIP1B	Optocoupler DC-IN 1-CH Transistor DC-OUT 4-Pin DIP SMD T/R	U24, U25, U26, U27, U28, U29, U30, U31, U32, U33, U34, U35	SOIC254P960X420-4N	PC817X2NIP1B	12
INA828ID	IC INST AMP 1 CIRCUIT 8SOIC	U36, U37, U38, U39	FP-D0008A-MFG	CMP-04895-000184-1	4
OPA2197IDR	IC OP AMP GP RR 10MHZ 8-SOIC	U40, U43, U45	FP-D0008A-MFG	CMP-04895-000044-1	3
MCP4922-E/SL	12-Bit DAC with SPI Interface, 14-Pin SOIC 150mil, Extended Temperature	U41, U44	SOIC-SL14_M	CMP-0188-00496-2	2
LM431AIM3X/NOPB	IC VREF SHUNT 37V 2.2% SOT23-3	U42, U46	FP-DBZ0003A-IPC_B	CMP-04916-000022-1	2
MAX6603ATB+T	2-Channel Platinum RTD-to-Voltage Signal Conditioner, -40 to 125 degC, 10-Pin SON (T1033+1), Pb-Free, Tape and Reel	U47	MAXM-T1033+1_V	CMP-0253-00482-1	1