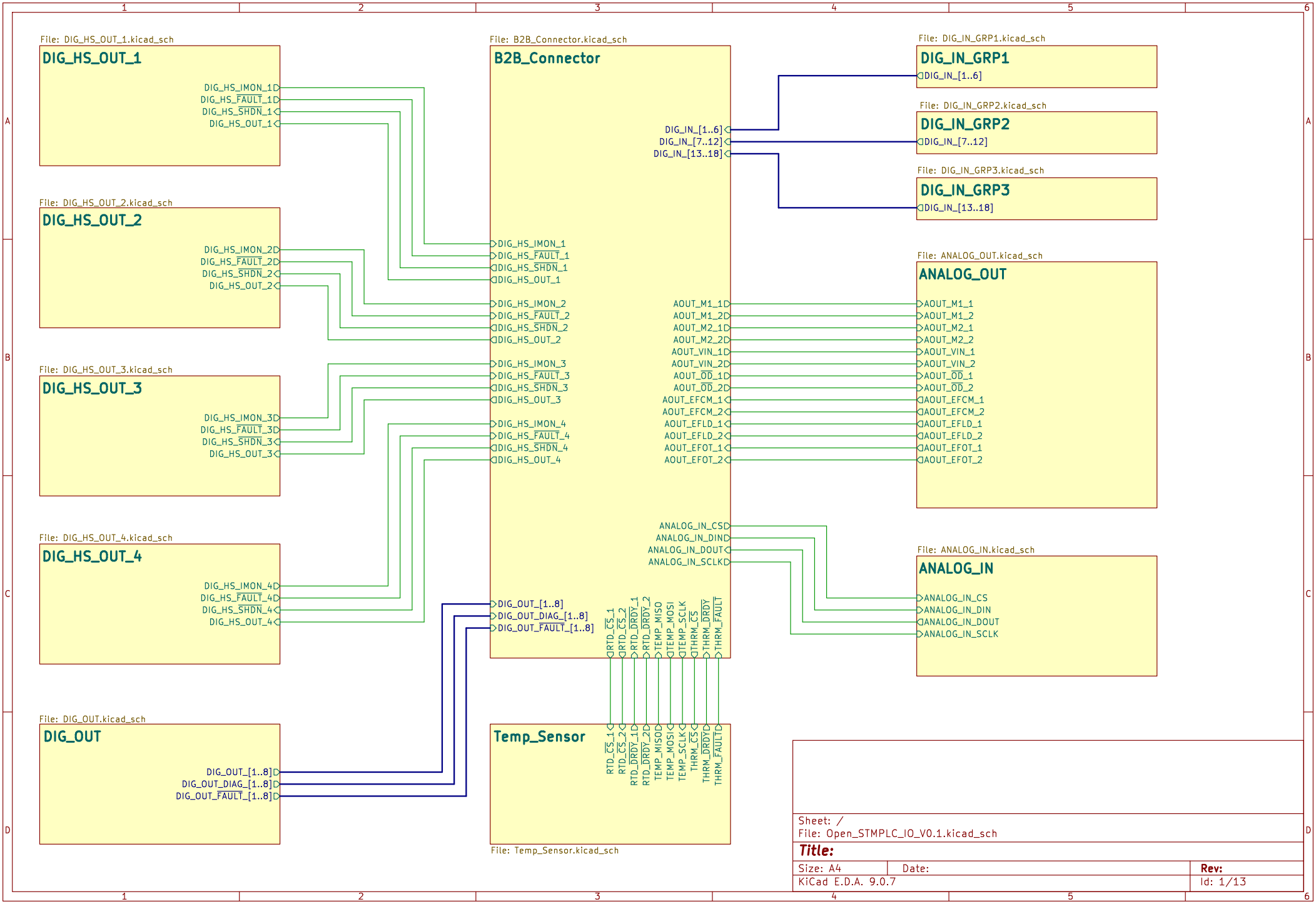
File: DIG_HS_OUT_1.kicad_sch
DIG_HS_OUT_1
DIG_HS_IMON_1
DIG_HS_FAULT_1
DIG_HS_SHDN_1
DIG_HS_OUT_1
File: DIG_HS_OUT_2.kicad_sch
DIG_HS_OUT_2
DIG_HS_IMON_2
DIG_HS_FAULT_2
DIG_HS_SHDN_2
DIG_HS_OUT_2
File: DIG_HS_OUT_3.kicad_sch
DIG_HS_OUT_3
DIG_HS_IMON_3
DIG_HS_FAULT_3
DIG_HS_SHDN_3
DIG_HS_OUT_3
File: DIG_HS_OUT_4.kicad_sch
DIG_HS_OUT_4
DIG_HS_IMON_4
DIG_HS_FAULT_4
DIG_HS_SHDN_4
DIG_HS_OUT_4
File: DIG_OUT.kicad_sch
DIG_OUT
DIG_OUT_[1..8]
DIG_OUT_DIAG_[1..8]
DIG_OUT_FAULT_[1..8]
File: B2B_Connector.kicad_sch
B2B_Connector
DIG_IN_[1..6]
DIG_IN_[7..12]
DIG_IN_[13..18]
DIG_HS_IMON_1
DIG_HS_FAULT_1
DIG_HS_SHDN_1
DIG_HS_OUT_1
DIG_HS_IMON_2
DIG_HS_FAULT_2
DIG_HS_SHDN_2
DIG_HS_OUT_2
DIG_HS_IMON_3
DIG_HS_FAULT_3
DIG_HS_SHDN_3
DIG_HS_OUT_3
DIG_HS_IMON_4
DIG_HS_FAULT_4
DIG_HS_SHDN_4
DIG_HS_OUT_4
AOUT_M1_1
AOUT_M1_2
AOUT_M2_1
AOUT_M2_2
AOUT_VIN_1
AOUT_VIN_2
AOUT_OD_1
AOUT_OD_2
AOUT_EFCM_1
AOUT_EFCM_2
AOUT_EFLD_1
AOUT_EFLD_2
AOUT_EFOT_1
AOUT_EFOT_2
ANALOG_IN_CS
ANALOG_IN_DIN
ANALOG_IN_DOUT
ANALOG_IN_SCLK
DIG_OUT_[1..8]
DIG_OUT_DIAG_[1..8]
DIG_OUT_FAULT_[1..8]
RTD_CS_1
RTD_CS_2
RTD_DRDY_1
RTD_DRDY_2
TEMP_MISO
TEMP_MOSI
TEMP_SCLK
THRM_CS
THRM_DRDY
THRM_FAULT
File: DIG_IN_GRP1.kicad_sch
DIG_IN_GRP1
DIG_IN_[1..6]
File: DIG_IN_GRP2.kicad_sch
DIG_IN_GRP2
DIG_IN_[7..12]
File: DIG_IN_GRP3.kicad_sch
DIG_IN_GRP3
DIG_IN_[13..18]
File: ANALOG_OUT.kicad_sch
ANALOG_OUT
AOUT_M1_1
AOUT_M1_2
AOUT_M2_1
AOUT_M2_2
AOUT_VIN_1
AOUT_VIN_2
AOUT_OD_1
AOUT_OD_2
AOUT_EFCM_1
AOUT_EFCM_2
AOUT_EFLD_1
AOUT_EFLD_2
AOUT_EFOT_1
AOUT_EFOT_2
File: ANALOG_IN.kicad_sch
ANALOG_IN
ANALOG_IN_CS
ANALOG_IN_DIN
ANALOG_IN_DOUT
ANALOG_IN_SCLK
Temp_Sensor
File: Temp_Sensor.kicad_sch
Sheet: /
File: Open_STMPLC_IO_V0.1.kicad_sch
Title:
Size: A4
Date:
Rev:
KiCad E.D.A. 9.0.7
Id: 1/13

DIGITAL HIGH-SPEED OUTPUT 1

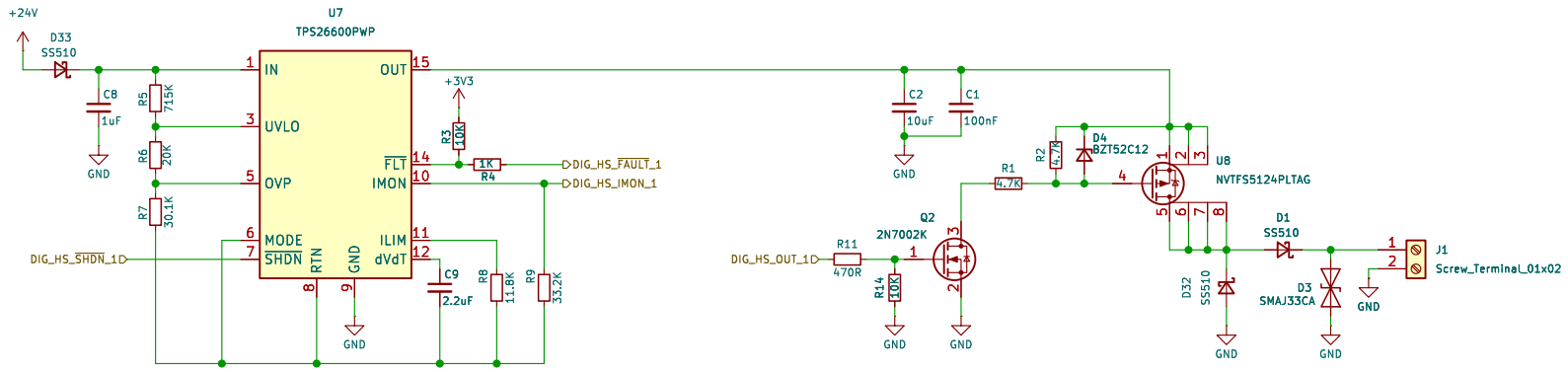

Sheet: /DIG_HS_OUT_1/
File: DIG_HS_OUT_1.kicad_sch

Title:

Size: A4	Date:	Rev:
KiCad E.D.A. 9.0.7		Id: 2/13

DIGITAL HIGH-SPEED OUTPUT 2

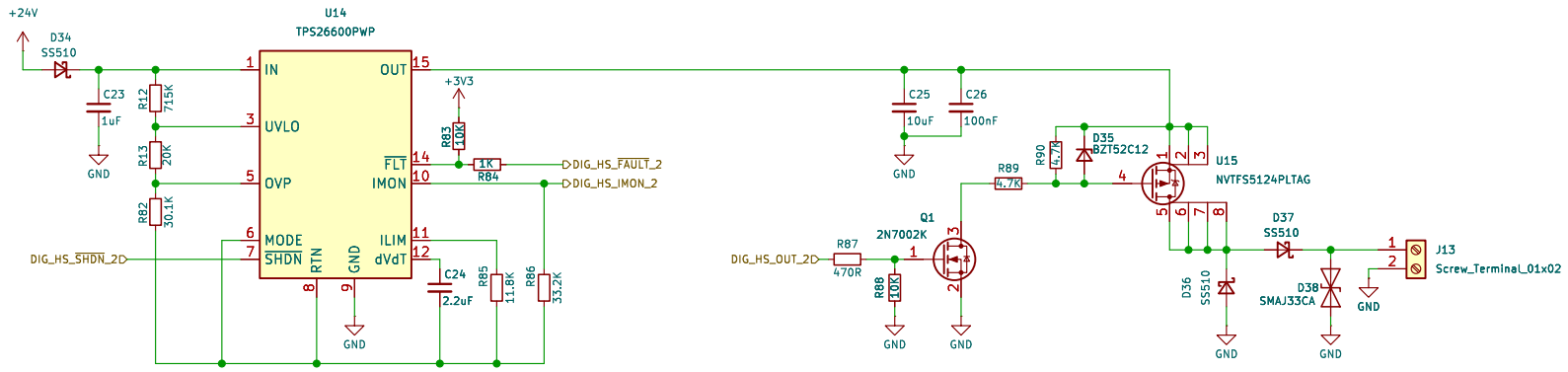

Sheet: /DIG_HS_OUT_2/
File: DIG_HS_OUT_2.kicad_sch

Title:

Size: A4	Date:	Rev:
KiCad E.D.A. 9.0.7		Id: 3/13

DIGITAL HIGH-SPEED OUTPUT 3

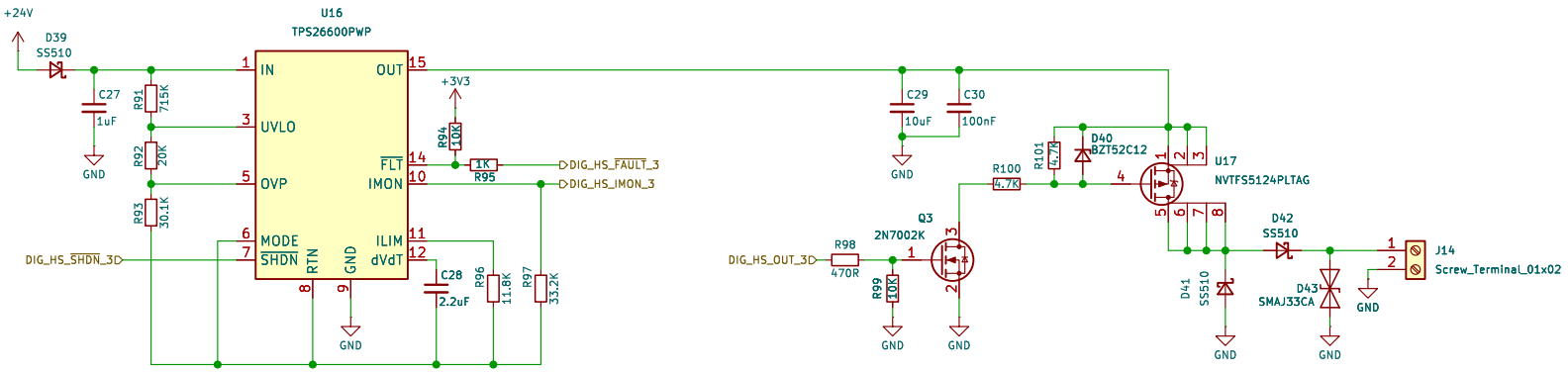

Sheet: /DIG_HS_OUT_3/
File: DIG_HS_OUT_3.kicad_sch

Title:

Size: A4	Date:	Rev:
KiCad E.D.A. 9.0.7		Id: 4/13

DIGITAL HIGH-SPEED OUTPUT 4

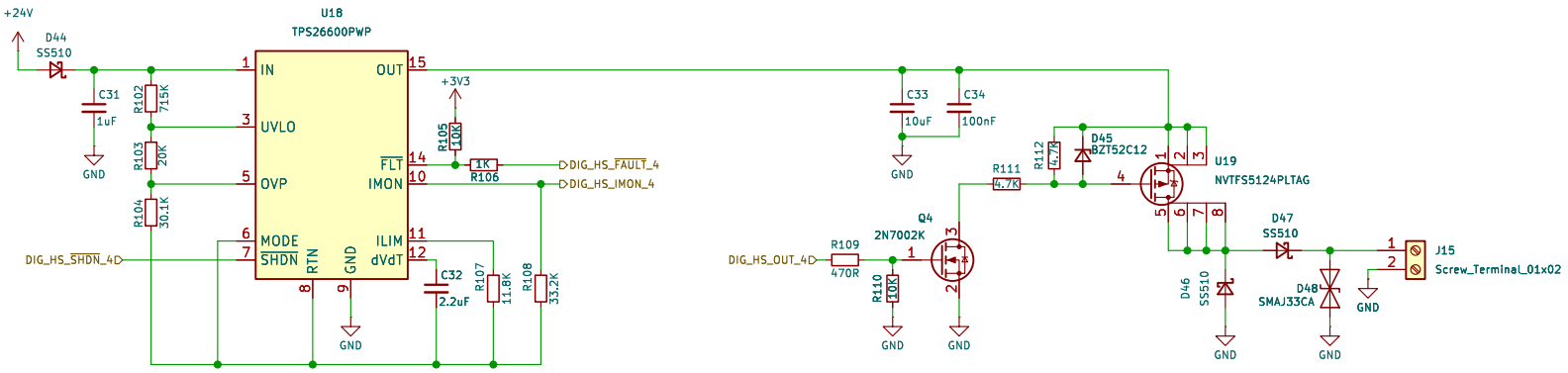

Sheet: /DIG_HS_OUT_4/
File: DIG_HS_OUT_4.kicad_sch

Title:

Size: A4	Date:	Rev:
KiCad E.D.A. 9.0.7		Id: 5/13

DIGITAL OUTPUT

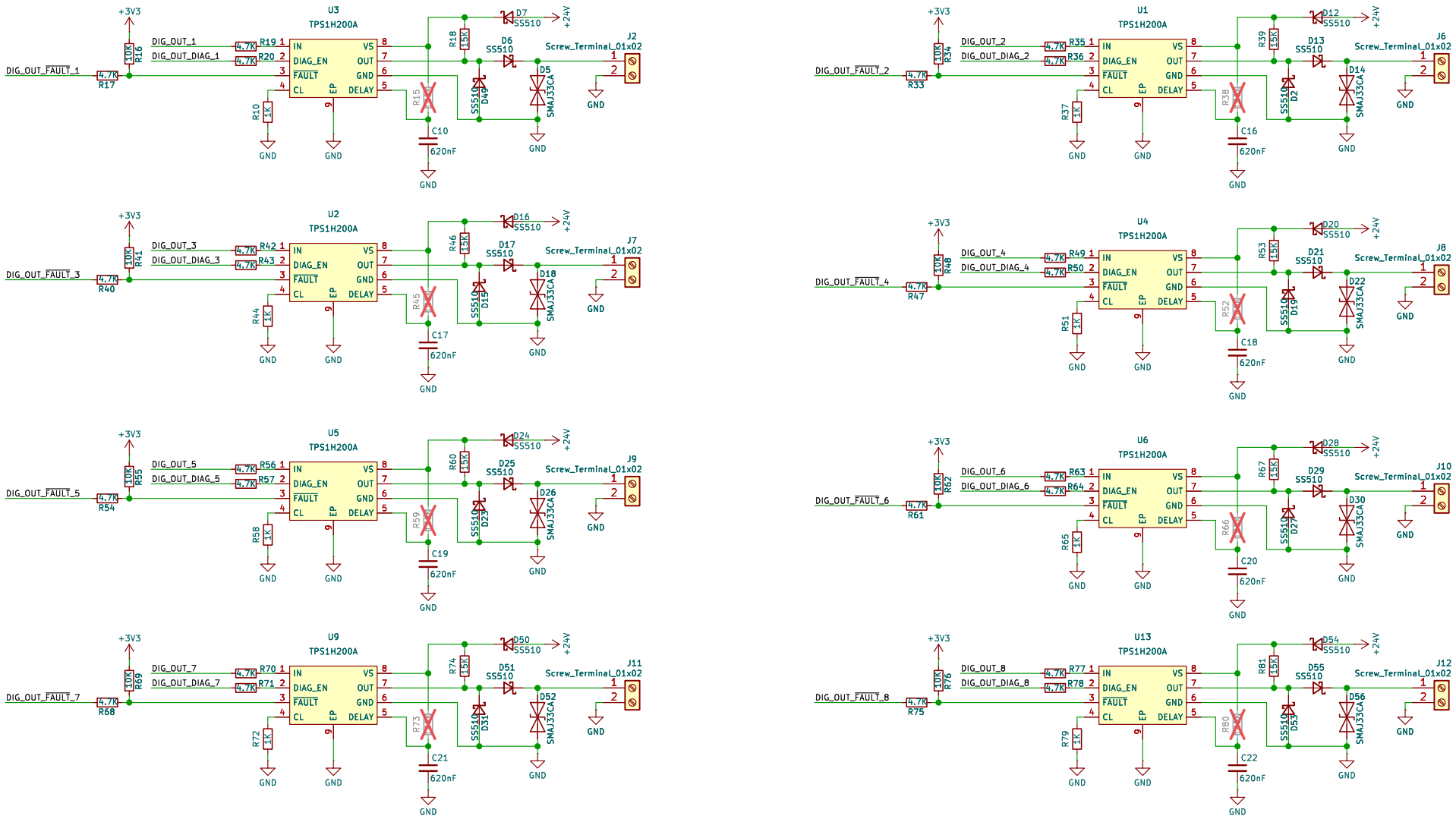

TO B2B CONNECTOR

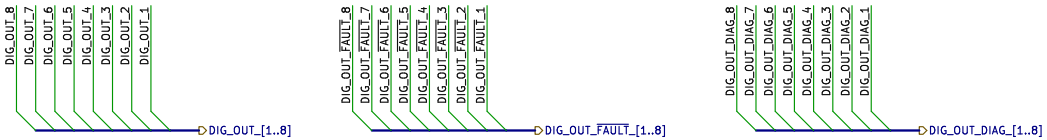

Sheet: /DIG_OUT/
File: DIG_OUT.kicad_sch

Title:

Size: A4	Date:	Rev:
KiCad E.D.A. 9.0.7		Id: 6/13

DIGITAL INPUT 1

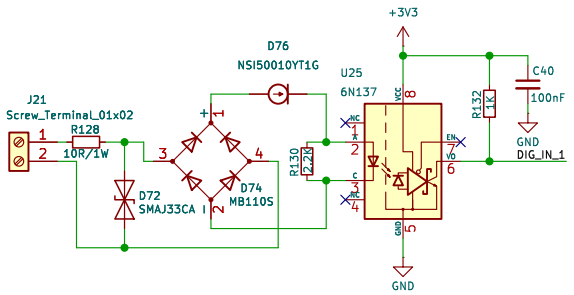

DIGITAL INPUT 2

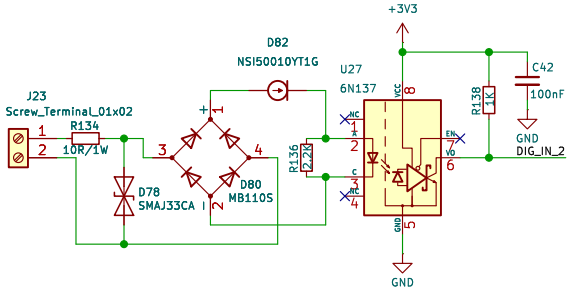

DIGITAL INPUT 3

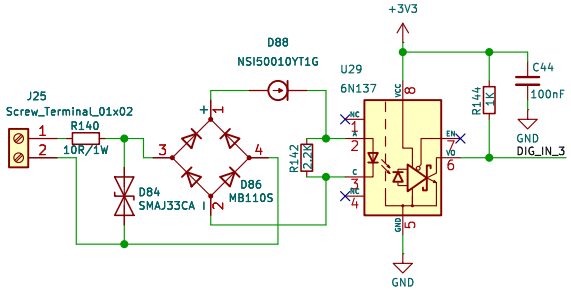

DIGITAL INPUT 4

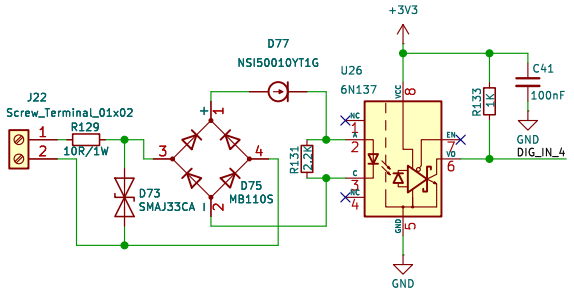

DIGITAL INPUT 5

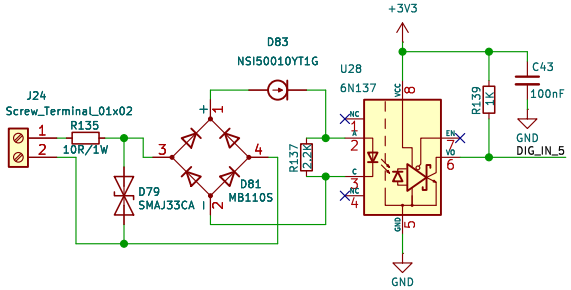

DIGITAL INPUT 6

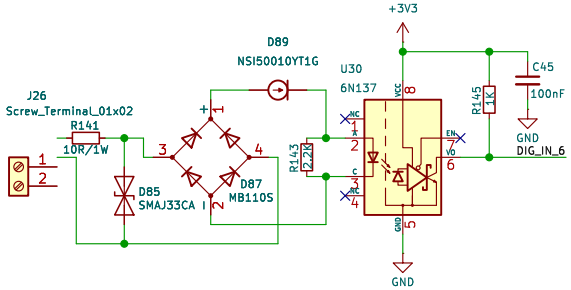

TO B2B CONNECTOR

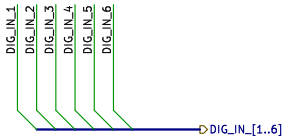

Sheet: /DIG_IN_GRP1/
File: DIG_IN_GRP1.kicad_sch

Title:

Size: A4	Date:	Rev:
KiCad E.D.A. 9.0.7		Id: 7/13

DIGITAL INPUT 7

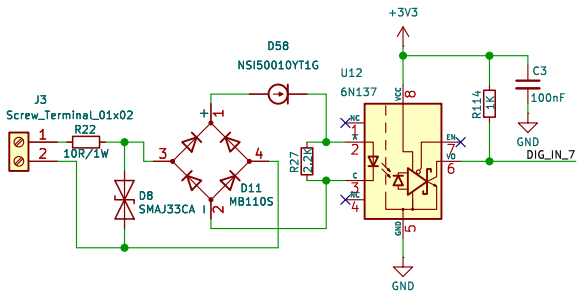

DIGITAL INPUT 8

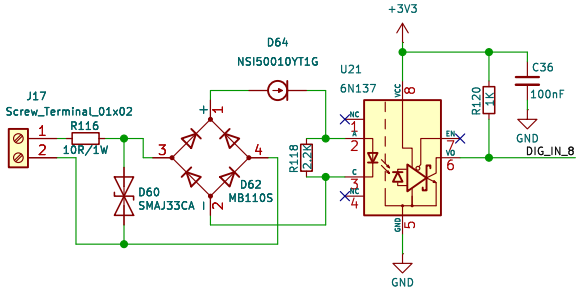

DIGITAL INPUT 9

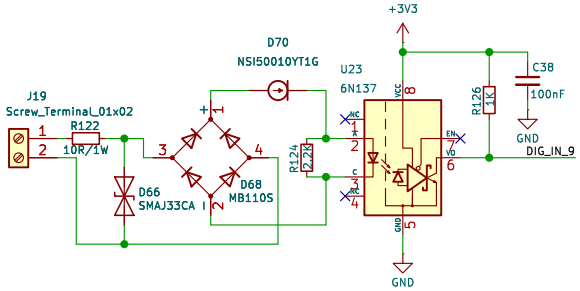

DIGITAL INPUT 10

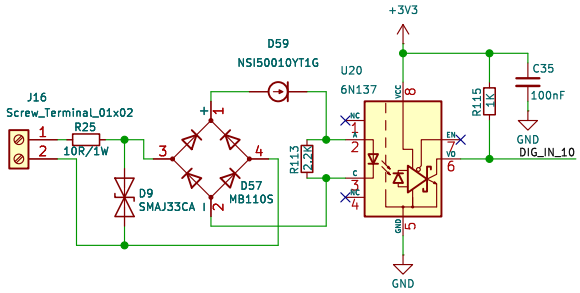

DIGITAL INPUT 11

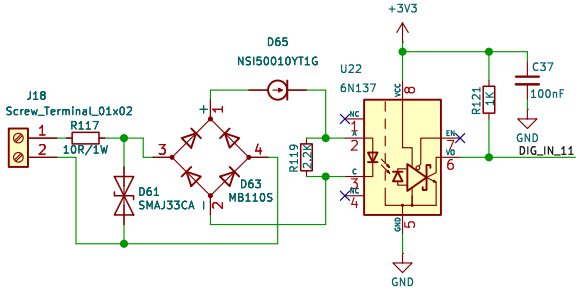

DIGITAL INPUT 12

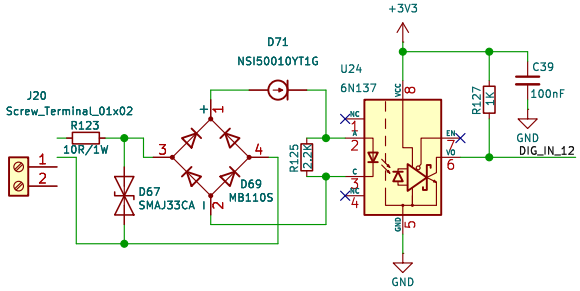

TO B2B CONNECTOR

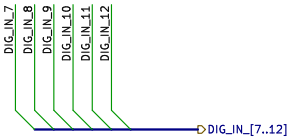

Sheet: /DIG_IN_GRP2/
File: DIG_IN_GRP2.kicad_sch

Title:

Size: A4	Date:	Rev:
KiCad E.D.A. 9.0.7		Id: 8/13

DIGITAL INPUT 13

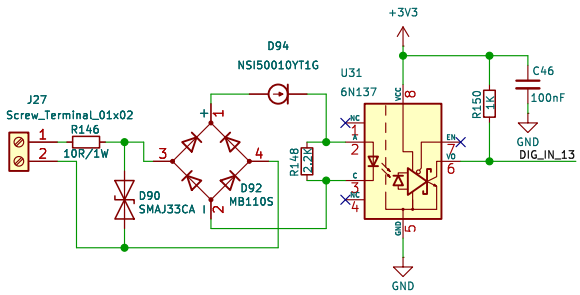

DIGITAL INPUT 14

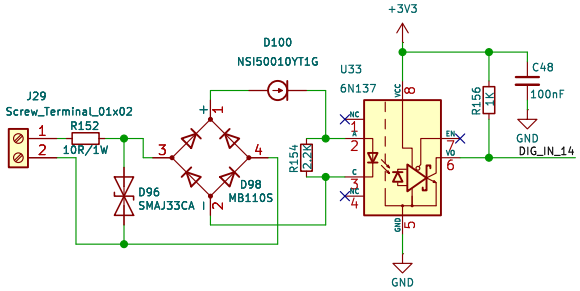

DIGITAL INPUT 15

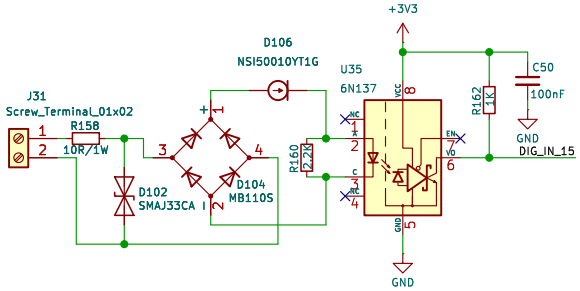

DIGITAL INPUT 16

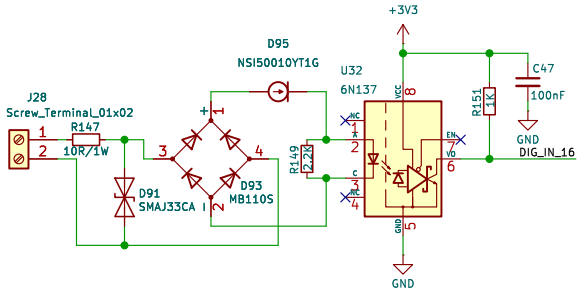

DIGITAL INPUT 17

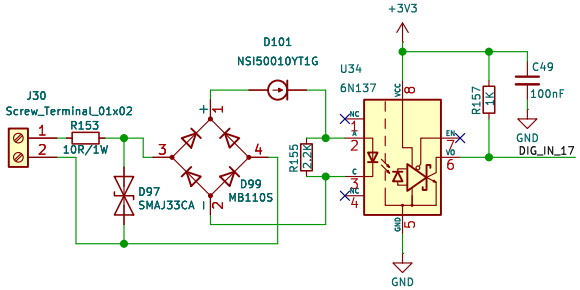

DIGITAL INPUT 18

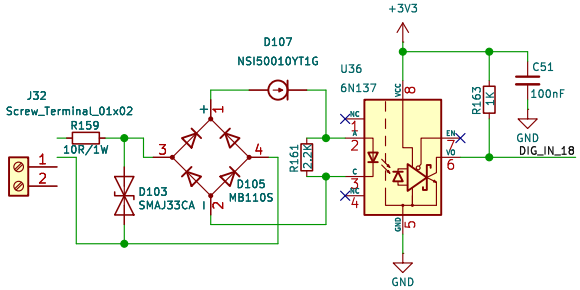

TO B2B CONNECTOR

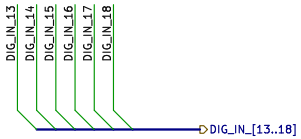

Sheet: /DIG_IN_GRP3/
File: DIG_IN_GRP3.kicad_sch

Title:

Size: A4	Date:	Rev:
KiCad E.D.A. 9.0.7		Id: 9/13

ANALOG OUTPUT 1

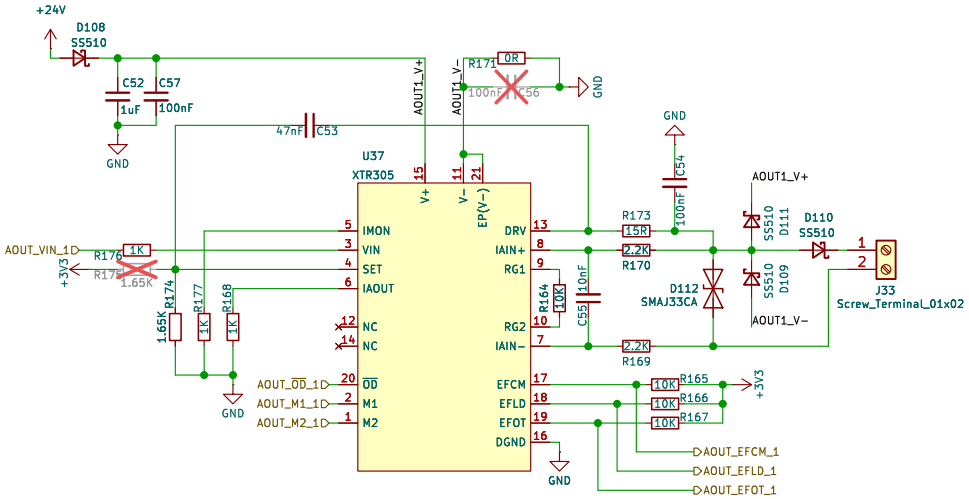

ANALOG OUTPUT 2

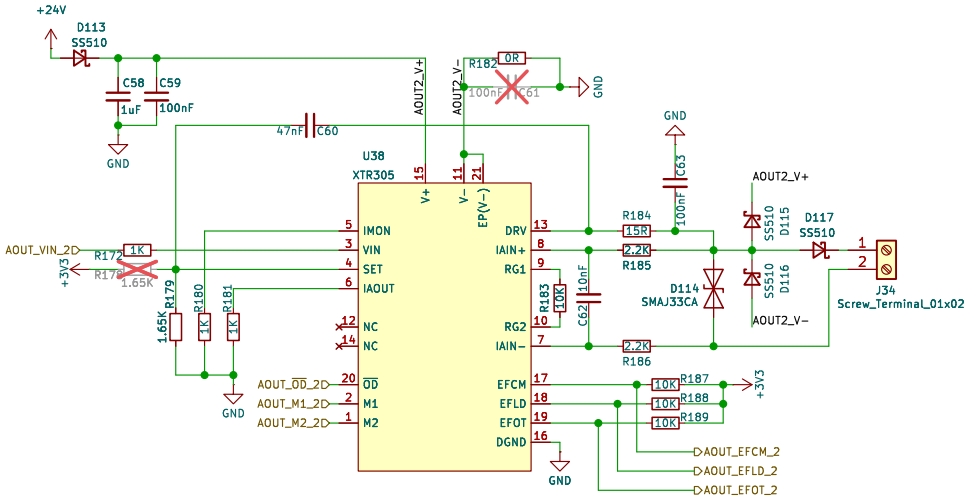

Sheet: /ANALOG_OUT/
File: ANALOG_OUT.kicad_sch

Title:

Size: A4	Date:	Rev:
KiCad E.D.A. 9.0.7		Id: 10/13

ANALOG INPUT 1 TO 4

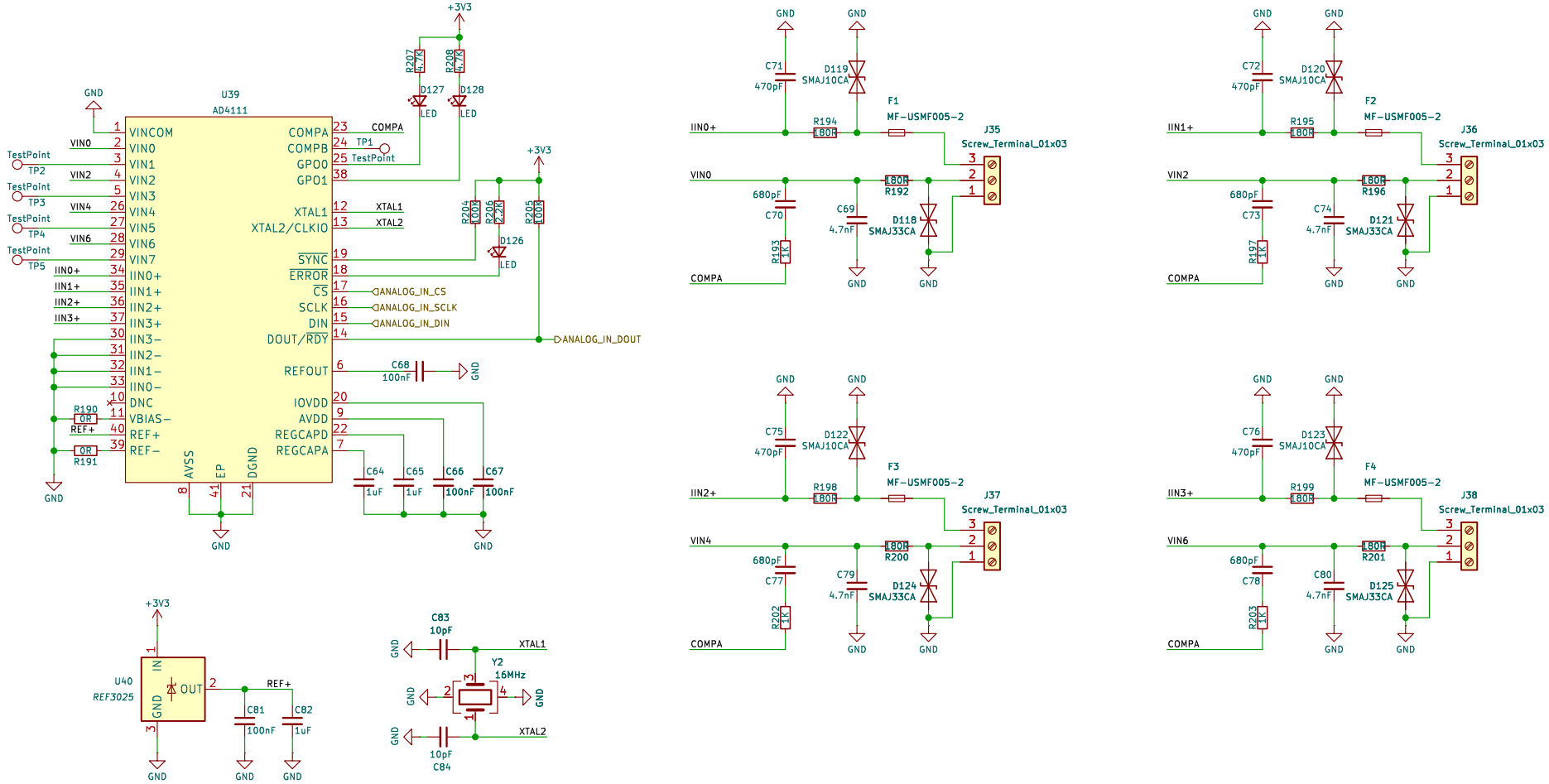

Sheet: /ANALOG_IN/
File: ANALOG_IN.kicad_sch

Title:

Size: A4	Date:	**Rev:**
KiCad E.D.A. 9.0.7		Id: 11/13

RTD TEMPERATURE SENSOR

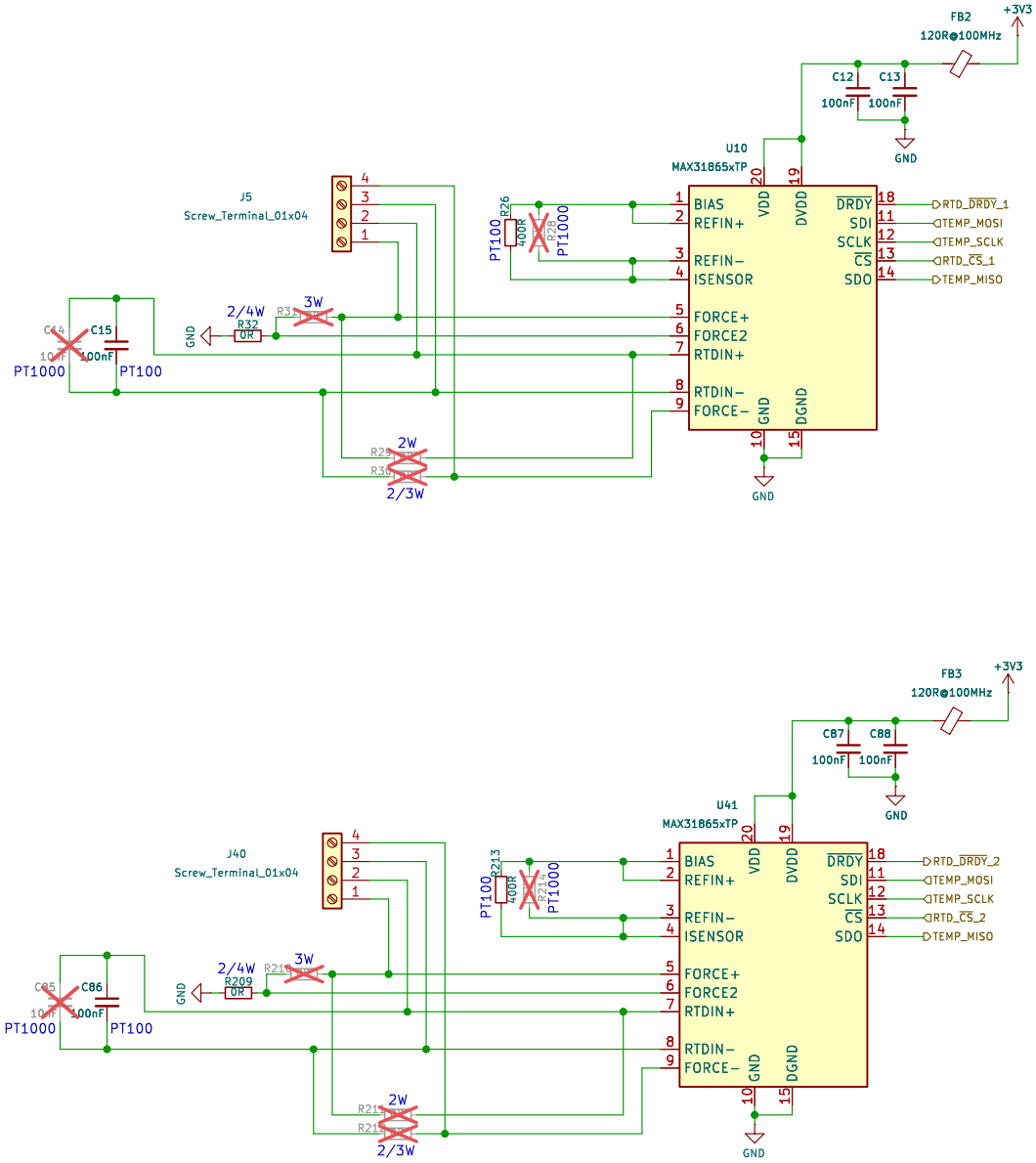

THRMOCOUPLE TEMPERATURE SENSOR

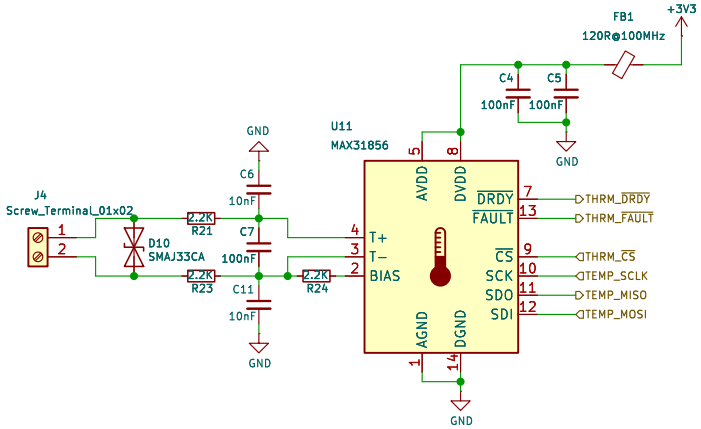

Sheet: /Temp_Sensor/
File: Temp_Sensor.kicad_sch

Title:

Size: A4	Date:	Rev:
KiCad E.D.A. 9.0.7		Id: 12/13

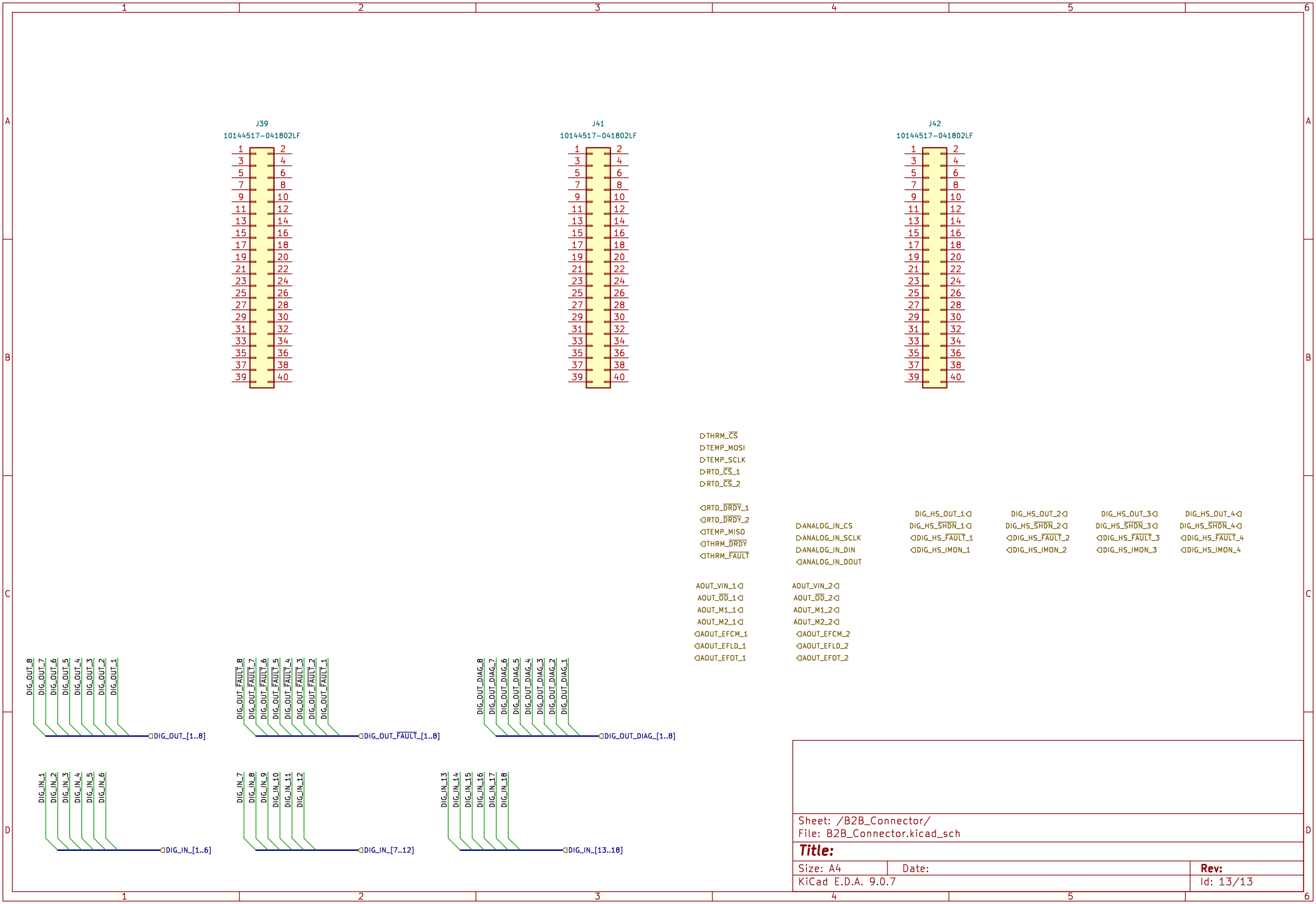

Sheet: /B2B_Connector/
File: B2B_Connector.kicad_sch

Title:

Size: A4	Date:	**Rev:**
KiCad E.D.A. 9.0.7		Id: 13/13