DiGi 820 Power Quality Monitor

KRYKARD

Application

- Power Quality Management System
- Harmonic Analysis
- Energy Supply failure analysis
- Voltage Sag / Swell Source Location
- Transient disturbances location

Complies with

IEC 61000-4-30

CLASS A Power Quality Analyser

Main Function

- **Class A Power Quality Measurement:** Harmonic and Inter-Harmonic, Voltage deviation, Frequency deviation, Unbalance, Sag / Swell and Flicker, Transient disturbances, EN50160 statistics
- **Class 0.2s Accuracy** for kWh & kVAh
- **Harmonic analysis** upto 63rd order
- **Fast Transient Detection:** Captures 1024 samples/Cycle, Min. transient disturbance records for 20µs
- **PQ Events**: Captures Voltage Sag / Swell, Rapid Voltage Change

Feature

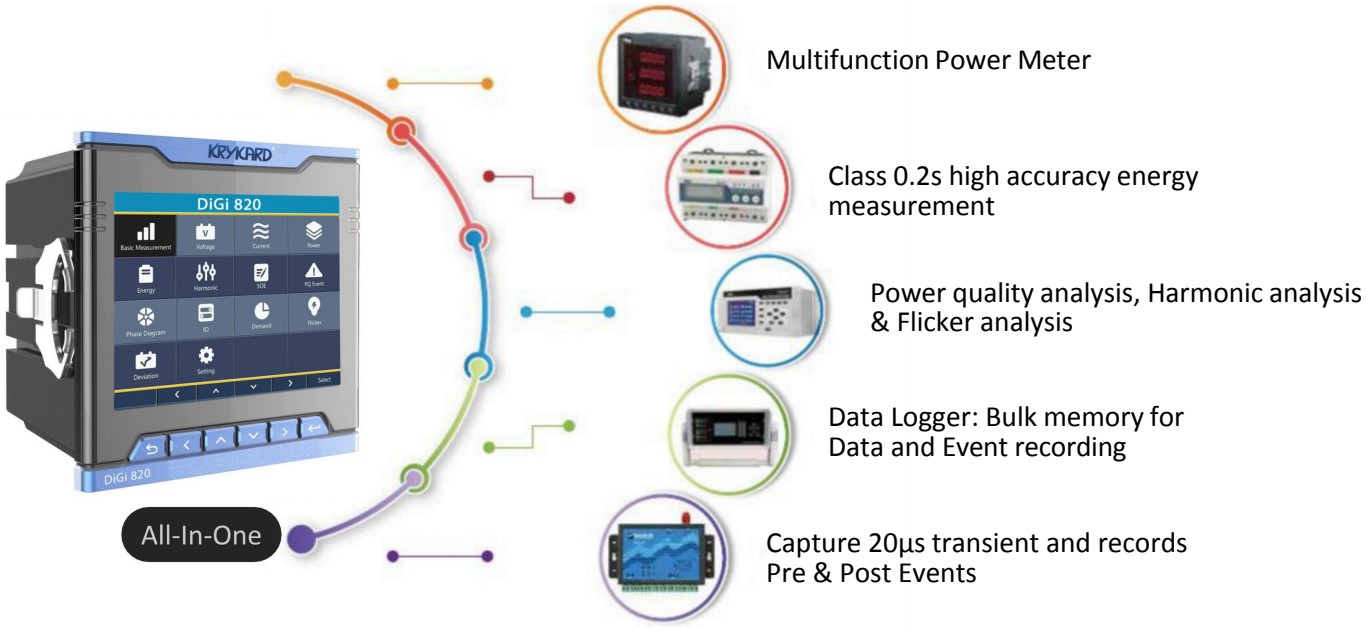

Measurement Parameters

Measurement Parameters		
Power Quality Analysis and location	Wave Sampling	1024 samples/cycle
	Harmonic	Upto 63rd Harmonic, Harmonic ratio, phase angle, Total Harmonic Distortion (THD), Total odd / even Harmonic Distortion
	Inter-Harmonics	Upto 63rd Inter-Harmonic, Harmonic %, Total Inter-Harmonic Distortion
	Voltage Sag/Swell/Stop	Waveform recordings, records Voltage sag/ swell's start time, stop time, duration time and their Max. and Min. value and Voltage variation depth
	Transient Capture	Capture 20µs transient
	Unbalance	Voltage, Current unbalance and zero sequence unbalance
	Voltage / Frequency Deviation	Set Threshold Limits to record alarm
	Rapid Voltage Alteration	Waveform record
	Voltage Fluctuation & Flicker Analysis	Calculate long term Flicker Plt and Short term Flicker Pst
	Sag/Swell Source direction	Can detect Source or Load side abnormal and fault
Measurement Channel	Voltage	4 Channels (R,Y,B & N)
	Current	4 Channels (R,Y,B & N)
Real-time Data	Voltage	Phase, Line, Average Voltage & Phase Angle
	Current	Phase, Average Current & Phase Angle
	Active power, Reactive power, Apparent Power	Phase & Total Power
	Power Factor	Phase & Total Power Factor
	Frequency	50/60Hz
Energy	Energy	4 Quadrant Energy
	Harmonic Energy	2~31
	History Energy	Storage latest 30 days and latest 12 months energy data
	Multi-tariff energy	4 tariff, 8 time period, 2 time zone
Demand	Real-time Demand	Options to select Fixed or Sliding for Three phase Current, Total active Power, Total reactive power & Total apparent power; Supports real-time demand, predict demand & Max. demand with RTS
Data and Event Record	Memory	8GB
	Max. / Min Record	This month and last month Max./Min. value with RTS
	Event Record	1024 events
	Waveform Record	Cycle before failure is settable, Waveform record mode as below: 1: 1024 Samples/Cycle @ 50 Cycle 2: 512 Samples/Cycle @ 100 Cycle 3: 256 Samples/Cycle @ 200 Cycle 4: 128 Samples/Cycle @ 400 Cycle 5: 64 Samples/Cycle @ 800 Cycle 6: 32 Samples/Cycle @ 1600 Cycle 7: 16 Samples/Cycle @ 3200 Cycle
	Transient Wave Record	256 samples
	EN50160 Statistics Function	In accordance with EN 50160 power quality standard, Statistics Voltage, Frequency, Harmonic, Flicker, deviation, unbalance and Voltage disturbance passed rate & other power quality index
DI/ DO	Digital Input (DI)	8 Channels
	Relay Output (RO)	4 Channels
	Digital Output (DO)	2 Channels
Display	Liquid crystal display	Color screen
	Resolution (pixels)	640*480
	Real-time waveform	Device interface displays real-time waveforms
Communication	RS485 Port	2 channels, baud rate: 2400~38400bps, MODBUS-RTU protocol
	Ethernet Port	1 channel, Modbus TCP.IP

DiGi 820 Power Quality Monitor

Advantage

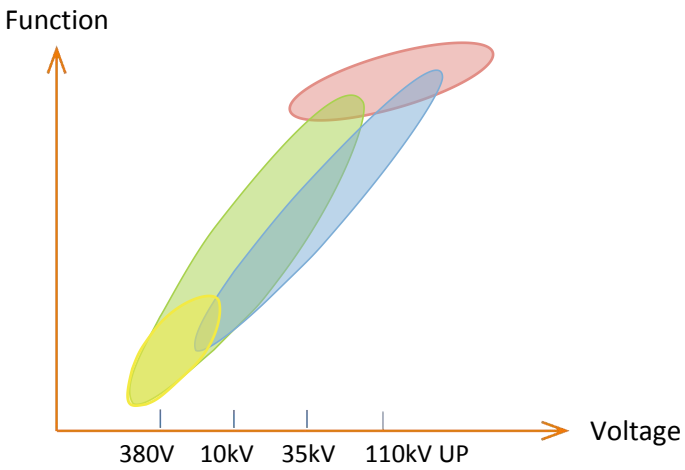

- DiGi 820
- Normal Power Meter
- Relay Protection Device
- Fault Recorder Device

Note: Area means function relation

- Specially for 380V~35kV Voltage level's industry and commercial building
- High-Density sampling Frequency, can record instantaneous, Transient Voltage disturbance
- Bulk memory function, can record each dynamic event
- Class A Harmonic content function, Harmonic measure times with high accuracy
- Powerful function, combines Multifunction Power Meter + Energy Meter + Power Quality Analyser + Failure Recorder into one

Interface

Home Page

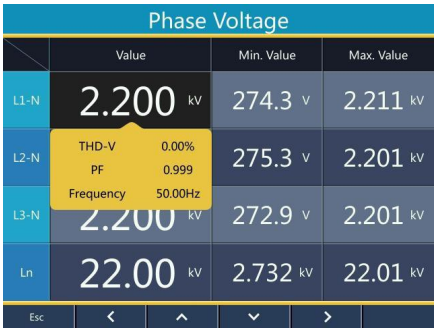

Real-time Monitoring

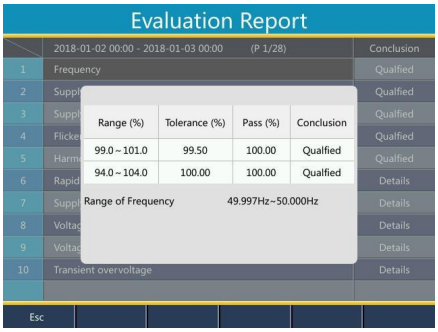

Evaluation Report

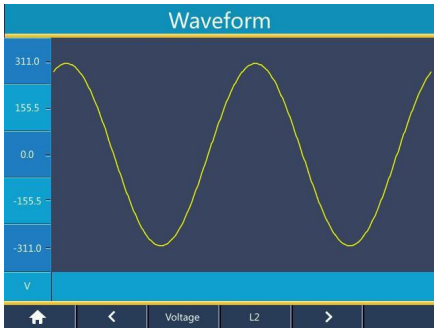

Real-time Waveform

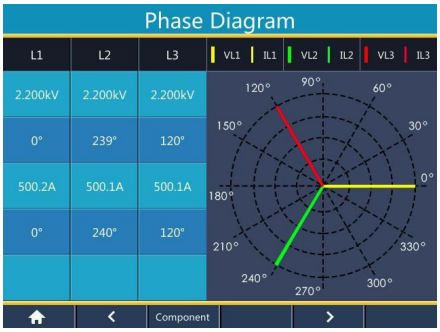

Vector Analysis

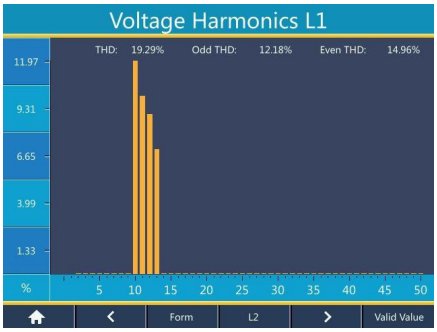

63rd Real-time Harmonic Analysis

Dimensions

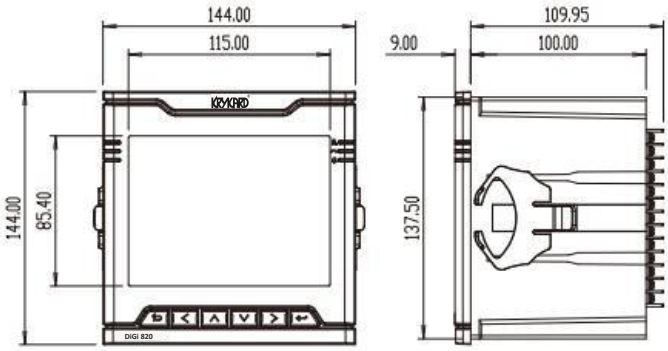

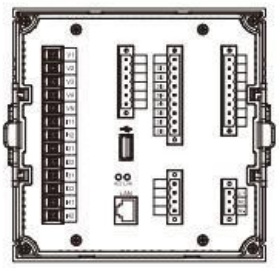

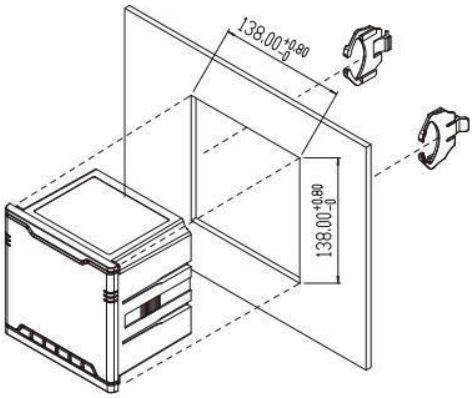

Technical Specifications

Power Supply	
Rated Voltage	85~275 AC/DC ± 10%， 45~65Hz
Power Consumption	<10W

AC Input		
	Input Voltage	**Input Current**
Rated Voltage/Current	0~400V (400V L-N / 690V L-L) **[OR]** 0~63V (63V L-N / 110V L-L)	5A **[OR]** 1A (Programmable)
Overload	120% Continuous; 400% for 1s	200% Continuous; 500% for 1s
Power Consumption	<0.1VA/Phase	<0.5VA/Phase@5A, <0.1VA/Phase@1A

Accuracy			
Voltage/ Current	±0.1%	**Harmonic**	Class A
Active / Reactive / Apparent Power	±0.2%	**Voltage Unbalance Rate**	±0.1%
Active Energy	Class 0.2s (IEC 62053-22)	**Current Unbalance Rate**	±0.5%
Reactive Energy	Class 2 (IEC 62053-23)	**Voltage Deviation**	±0.1%
Power Factor	±0.5%	**Frequency Deviation**	±0.005Hz
Frequency	±0.005Hz	**Flicker**	±5%

Environment	
Operating Temperature	-10°C to +55°C
Storage Temperature	-40°C~+85°C
Humidity	5%~95%
IP Index	Front: IP52; Side & Back: IP30
Measure mode	3 phase 4 wire, 3 phase 3 wire

DI / DO	
DI	8 Channel, time resolution 1ms
RO1-RO4	Relay, action / return time: <10ms
DO1-DO2	Breaking Capacity: 250VA/30VDC, 0.2A, L/R=20ms Max. Voltage 30VDC Max. Current 50mA

Communication	
RS485 port	2 Port, 2400-38400bps, Modbus-RTU protocol
Ethernet Port	1 port, Modbus TCP IP (Optional IEC61850)

Electromagnetic compatibility	
Electrostatic discharge immunity	IEC 61000-4-2 Class IV
Fast transient burst immunity	IEC 61000-4-4 Class IV
Radio Frequency electromagnetic field radiation immunity	IEC61000-4-3 Class III
Surge immunity	IEC 61000-4-5 Class IV
Frequency magnetic field immunity	IEC 61000-4-8 Class IV

Order Information
Voltage Input: 110V, 5A / 1A [OR] 690V, 5A / 1A
SD: No external power supply (Dry contact) digital input
CP: IEC61850 Protocol

atandra
measure. protect. conserve

Atandra Energy Private Limited
No. 5, Kumaran Street, Pazhavanthangal, Chennai - 600 114.
Tel: +91 44 4278 0600/ 4278 0700 | www.atandra.in | energy@atandra.in

OUR DEALER

Revision: Nov 2019. Specifications are subject to change without prior notice.
KRYKARD is a registered trademark owned by Atandra Energy Pvt. Ltd.