# PLM-R93 Three Phase Din Rail Energy Meter

## Basic Function

- Suitable for 230V, 3ph-4w system.
- 7+1 digits LCD display(9999999.9 kWh)
- Measures and displays V, I, P, PF, F, kWh, kVArh, Multi-tariff energy values
- kVAr and kVA available on communication
- Records historical data of
  - Present day data with 15 minute time interval.
  - Last 31 days of every month's cumulative data.
  - Last 12 months of every month's cumulative data.
  - Last 10 years of every year's cumulative data.
- kWh accuracy class 1.0 as per IEC 62053-21.
- 2 LED pulse indications for kWh and kVArh)
- LCD display for phase sequence error indication.
- 3 keys for programming and scrolling the display parameters.
- 35 mm DIN Rail, Installation Standard- DIN Ed5002
- High temperature resistant materials.
- RS 485 port with MODBUS RTU protocol.

## Technical Specification

| INPUTS | |
|---|---|
| Voltage | AC 230V Ph-N, 400v Ph-Ph |
| Current | Direct: 63A |
| Burden | <2W |
| Connection Model | 3-Phase,4-Wire |
| Starting Current | 0.4% of Nominal Current |
| Power Frequency withstand voltage | 2kV |
| **DISPLAY** | |
| Type | 7+1 digits LCD display |
| **AUXILIARY SUPPLY** | |
| Power Supply | Self Power Supply For 220 Vac(L-N), Range:184~276Vac |
| **COMMUNICATION (OPTIONAL)** | |
| Protocol | RS 485 Serial,ModBus-RTU |
| Baud Rate | 2400,4800,9600 |
| Address | 1~247 |

Note: For RS 485 Min 415V required, won't work in Single Phase Supply

| GENERAL | |
|---|---|
| Temperature | Operating Temperature: -20~+55<br>Storage Temperature: -40~+70 |
| Humidity | 5% to 95% non condensing |

**STANDARD**

- Electrostatic discharge immunity test- IEC 61000-4-2, Level 4
- Radiated immunity test-IEC 61000-4-3, Level 3
- Electrical fast transient/burst immunity test
- IEC 61000-4-4,Level 4
- Surge immunity test (1, 2/50µs~8/20µs)-IEC 61000-4-5, Level 4
- Conducted emission EN55022, Class B
- Radiated emission EN55022, Class B

| MECHANICAL | |
|---|---|
| Case | PC/ABS Plastic FR Grade |
| Dimensions | 72*100*65mm |
| Cutout | 50*50mm |

| Parameters | Accuracy | Resolution | Measuring range |
|---|---|---|---|
| Voltage | 0.20% | 0.01V | For 220Vac(L-N),Range:184-276Vac |
| Current | 0.20% | 0.001A | Direct 5(63)A |
| Active Power | 0.50% | 0.1W | 0~1MW |
| Power Factor | 0.50% | 0.001 | -1.000-+1.000 |
| Frequency | 0.01 | 0.1Hz | 47-65Hz |
| Active Energy | Class 1 | 0.1kWh | 0-999999.9kWh |
| Reactive Energy | Class 2 | 0.1kVArh | 0-999999.9kVArh |
| Reactive Power | 1.00% | 0.1VAr | 0~1MVAr |
| Apparent Power | 0.50% | 0.1VA | 0~1MVA |

## Dimension & Installation

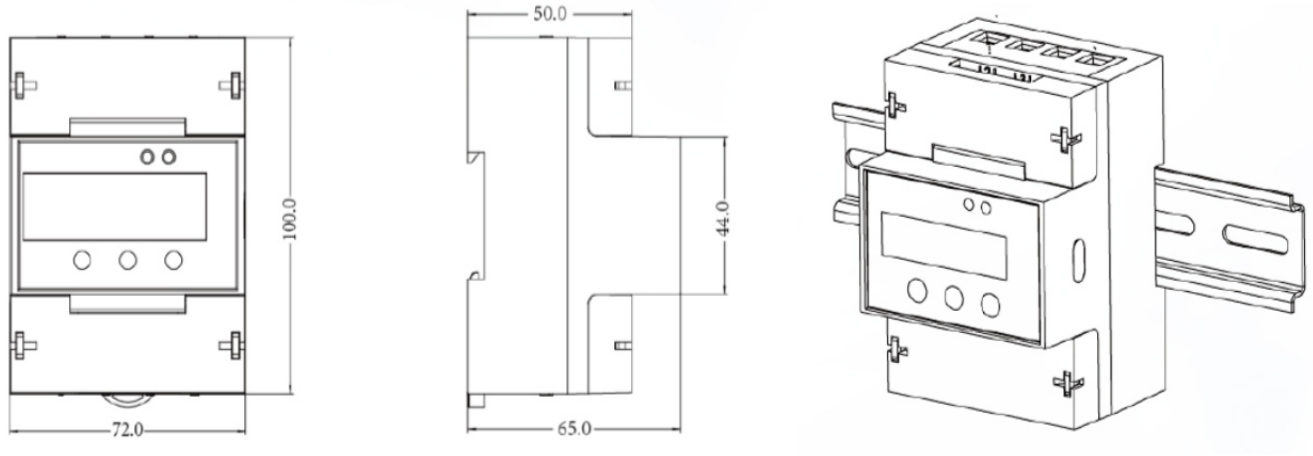


Model No. PLM-R93, which indicates the device provides basic function, accuracy class 1, rated current is 5(63)A , provides TOU (Multi-tariff) function and rated voltage input is 220/380V, 50Hz

atandra
measure. protect. conserve

Atandra Energy Private Limited
No. 5, Kumaran Street, Pazhavanthangal, Chennai - 600 114
Tel: +91 44 4278 0700 | 4278 0600
www.atandra.in | energy@atandra.in

Chennai | Coimbatore | Bengaluru | Hyderabad | Vishakapatnam | Mumbai | Pune
Ahmedabad | New Delhi | Madurai | Kochi | Tirupur

OUR DEALER